MasterLine 8_2026-07

Edition 02/07/2026
Created by Bernd Maes

Reynaers Aluminium

Together for better
www.reynaers.com

Always consult the system related processing data!
Consulteer altijd de systeemgerelateerde verwerkingsvoorschriften!
Consultez toujours le traitement de données en cours liées au système!
Beachten Sie unbedingt die systembezogenen Verarbeitungsvorschriften!

Reynaers Aluminium

TABLE OF CONTENTS

Processing Data / Verwerkingsvoorschriften / Traitement de préscriptions / Daten Verarbeiten 23

PROCESSING DATA + BI-METAL | PROCESSING DATA 24

Sections / Snedes / Coupes / System-schnittzeichnungen 73

PROFILE OVERVIEW MASTERLINE 8 | PROFILE OVERVIEW 74

SECTIONS OVERVIEW MASTERLINE 8 | SECTION OVERVIEW 88

SECTIONS MASTERLINE 8-Fu | FIXED WINDOW 92

SECTIONS MASTERLINE 8-Fu | COMBINED FIXED WINDOW - SLIM 94

SECTIONS MASTERLINE 8-Fu | FIXED WINDOW FRAME WITH VENT 95

SECTIONS MASTERLINE 8-Fu | TURN AND TILT WINDOW 96

SECTIONS MASTERLINE 8-Fu | TURN AND TILT WINDOW HI -> STANDARD 97

SECTIONS MASTERLINE 8-Fu | TURN AND TILT WINDOW HI -> HI+ 98

SECTIONS MASTERLINE 8-Fu | TURN AND TILT WINDOW RC2 99

SECTIONS MASTERLINE 8-Fu | TURN AND TILT WINDOW RC3 100

SECTIONS MASTERLINE 8-Fu | TURN AND TILT WINDOW 130KG < FG < 200KG 101

SECTIONS MASTERLINE 8-Fu | SIDE-HUNG WINDOW 200KG < FG < 300KG 102

SECTIONS MASTERLINE 8-Fu | DOUBLE CASEMENT WINDOW INWARD OPENING 103

SECTIONS MASTERLINE 8-Fu | INTEGRATED DOUBLE CASEMENT WINDOW 104

SECTIONS MASTERLINE 8-SP | PIVOT WINDOW 105

SECTIONS MASTERLINE 8-Fu | SIDE-HUNG WINDOW OUTWARD OPENING 106

SECTIONS MASTERLINE 8-SP | VENTILATION VENT STANDARD 107

SECTIONS MASTERLINE 8-Fu | DOUBLE CASEMENT WINDOW OUTWARD OPENING 108

SECTIONS MASTERLINE 8-SP | VENTILATION VENT STANDARD -> HI+ 109

SECTIONS MASTERLINE 8-Fu | FRONT SLIDE 110

SECTIONS MASTERLINE 8-Fu Balcony Door | BALCONY DOOR SINGLE INWARD OPENING 113

SECTIONS MASTERLINE 8-Fu Balcony Door | BALCONY DOOR SINGLE INWARD OPENING - VARIANT 114

SECTIONS MASTERLINE 8-Fu Balcony Door | BALCONY DOOR DOUBLE CASEMENT INWARD OPENING 115

SECTIONS MASTERLINE 8-Fu Balcony Door | BALCONY DOOR DOUBLE INWARD OPENING - VARIANT 116

SECTIONS MASTERLINE 8-Fu Balcony Door | COMBINED BALCONY DOOR INWARD OPENING 117

SECTIONS MASTERLINE 8-Fu Balcony Door | COMBINED BALCONY DOOR INWARD OPENING - VARIANT 119

SECTIONS MASTERLINE 8-Fu Balcony Door | BALCONY DOOR SINGLE OUTWARD OPENING 121

SECTIONS MASTERLINE 8-Fu Balcony Door | BALCONY DOOR SINGLE OUTWARD OPENING - VARIANT 122

SECTIONS MASTERLINE 8-Fu Balcony Door | BALCONY DOOR DOUBLE CASEMENT OUTWARD OPENING 123

SECTIONS MASTERLINE 8-Fu Balcony Door | BALCONY DOOR DOUBLE OUTWARD OPENING - VARIANT 124

SECTIONS MASTERLINE 8-Fu Balcony Door | COMBINED BALCONY DOOR OUTWARD OPENING 125

SECTIONS MASTERLINE 8-Fu | BALCONY DOOR SINGLE INWARD OPENING WITH PANEL 126

SECTIONS MASTERLINE 8-Fu | BALCONY DOOR SINGLE INWARD OPENING WITH PANEL - VARIANT 127

SECTIONS MASTERLINE 8-Fu | BALCONY DOOR DOUBLE INWARD OPENING WITH PANEL 128

SECTIONS MASTERLINE 8-Fu | BALCONY DOOR DOUBLE INWARD OPENING WITH PANEL - VARIANT 129

SECTIONS MASTERLINE 8-Fu Balcony Door | BALCONY DOOR SINGLE INWARD OPENING HI -> HI+ 130

SECTIONS Masterline 8-Fu Balcony Door 2024 | BALCONY DOOR INWARD OPENING CONCEALED HARDWARE 131

SECTIONS Masterline 8-Fu Balcony Door 2024 | BALCONY DOOR INWARD OPENING (CONCEALED HARDWARE) - VARIANT 132

SECTIONS Masterline 8-Fu Balcony Door 2024 | BALCONY DOOR DOUBLE INWARD OPENING (CONCEALED HARDWARE) 133

SECTIONS Masterline 8-Fu Balcony Door 2024 | COMBINED BALCONY DOOR INWARD OPENING (CONCEALED HARDWARE) 134

SECTIONS Masterline 8-Fu Balcony Door 2024 | COMBINED BALCONY DOOR INWARD OPENING (CONCEALED HARDWARE) - VARIANT 136

SECTIONS MASTERLINE 8-Fu | WINDOW-DOOR INWARD OPENING 138

SECTIONS MASTERLINE 8-Fu | WINDOW-DOOR DOUBLE INWARD OPENING 139

SECTIONS MASTERLINE 8-Fu | WINDOW-DOOR OUTWARD OPENING 140

SECTIONS Masterline 8-Fu Balcony Door 2024 | WINDOW-DOOR OUTWARD OPENING 141

SECTIONS Masterline 8-Fu Balcony Door 2024 | WINDOW-DOOR SINGLE OUTWARD OPENING - VARIANT 142

SECTIONS MASTERLINE 8-Fu | WINDOW-DOOR DOUBLE OUTWARD OPENING 143

SECTIONS Masterline 8-Fu Balcony Door 2024 | WINDOW-DOOR DOUBLE OUTWARD OPENING 144

SECTIONS Masterline 8-Fu Balcony Door 2024 | WINDOW-DOOR DOUBLE OUTWARD OPENING - VARIANT 145

SECTIONS MASTERLINE 8-Fu | WINDOW-DOOR INWARD OPENING WITH PANEL 146

SECTIONS MASTERLINE 8-Fu | DOUBLE WINDOW-DOOR INWARD OPENING WITH PANEL 147

SECTIONS Masterline 8-Fu Balcony Door 2024 | COMBINED WINDOW-DOOR OUTWARD OPENING 148

SECTIONS Masterline 8-Fu Balcony Door 2024 | COMBINED WINDOW-DOOR OUTWARD OPENING - VARIANT 150

SECTIONS Masterline 8-Fu Balcony Door 2024 | BALCONY DOOR SINGLE INWARD OPENING (CONCEALED HARDWARE) HI -> HI+ 152

SECTIONS Masterline 8-Fu Balcony Door 2024 | BALCONY DOOR SINGLE INWARD OPENING WITH PANEL (CONCEALED HARDWARE) 153

SECTIONS Masterline 8-Fu Balcony Door 2024 | BALCONY DOOR SINGLE INWARD OPENING WITH PANEL (CONCEALED HARDWARE) - VARIANT 154

SECTIONS Masterline 8-Fu Balcony Door 2024 | BALCONY DOOR DOUBLE INWARD OPENING WITH PANEL (CONCEALED HARDWARE) 155

SECTIONS Masterline 8-Fu Balcony Door 2024 | BALCONY DOOR DOUBLE INWARD OPENING WITH PANEL (CONCEALED HARDWARE) - VARIANT 156

SECTIONS Masterline 8-Fu Balcony Door 2024 | BALCONY DOOR DOUBLE INWARD OPENING (CONCEALED HARDWARE) - VARIANT 157

SECTIONS Masterline 8-Fu Balcony Door 2024 | ADA-COMPLIANT DOOR 158

SECTIONS MASTERLINE 8-Re | TURN AND TILT WINDOW 159

SECTIONS MASTERLINE 8-Re | DOUBLE CASEMENT WINDOW 161

SECTIONS MASTERLINE 8-Re | WINDOW-DOOR INWARD OPENING 162

SECTIONS MASTERLINE 8-Re | WINDOW-DOOR DOUBLE INWARD OPENING 163

SECTIONS MASTERLINE 8-Re | WINDOW-DOOR OUTWARD OPENING 164

SECTIONS MASTERLINE 8-Re | WINDOW-DOOR DOUBLE OUTWARD OPENING 165

SECTIONS MASTERLINE 8-De | TURN AND TILT WINDOW 166

SECTIONS MASTERLINE 8-De | COMBINED WINDOW INWARD OPENING 167

SECTIONS MASTERLINE 8-De | DOUBLE CASEMENT WINDOW 168

SECTIONS MASTERLINE 8-De | WINDOW-DOOR INWARD OPENING 169

SECTIONS MASTERLINE 8-De | WINDOW-DOOR DOUBLE INWARD OPENING 170

SECTIONS MASTERLINE 8-De | WINDOW-DOOR OUTWARD OPENING 171

SECTIONS MASTERLINE 8-De | WINDOW-DOOR DOUBLE OUTWARD OPENING 172

SECTIONS MASTERLINE 8-HV | TURN AND TILT WINDOW - HIDDEN VENT 173

SECTIONS MASTERLINE 8-HV | COMBINED FRAME - HIDDEN VENT 174

SECTIONS MASTERLINE 8-HV | DOUBLE CASEMENT WINDOW - HIDDEN VENT 175

SECTIONS MASTERLINE 8-HV | TURN AND TILT WINDOW - HIDDEN VENT 176

SECTIONS MASTERLINE 8-HV | COMBINED FRAME - HIDDEN VENT 177

SECTIONS MASTERLINE 8-HV | DOUBLE CASEMENT WINDOW - HIDDEN VENT 178

SECTIONS Masterline 8-HV Balcony Door 2024 | BALCONY DOOR DOUBLE INWARD OPENING (CONCEALED HARDWARE) - HIDDEN VENT 179

SECTIONS Masterline 8-HV Balcony Door 2024 | BALCONY DOOR DOUBLE INWARD OPENING (CONCEALED HARDWARE) - HIDDEN VENT - VARIANT 181

SECTIONS MASTERLINE 8-Fu | DOOR HI -> HI+ 183

SECTIONS MASTERLINE 8-Fu | COMBINED DOOR HI -> HI+ 184

SECTIONS MASTERLINE 8-Fu | DBL. CAS. DOOR HI -> HI+ 186

SECTIONS MASTERLINE 8-Fu | Z-T DOOR HI -> HI+ 187

SECTIONS MASTERLINE 8-Fu | DOOR RC2 188

SECTIONS MASTERLINE 8-Fu | DOOR RC3 189

SECTIONS MASTERLINE 8-Fu | DOOR HID 190

SECTIONS MASTERLINE 8-Fu | DOOR WITH BRUSH FLOOR PROFILE 191

SECTIONS MASTERLINE 8-Fu | DOOR INWARD OPENING WITH DOUBLE WEATHER STRIP 192

SECTIONS MASTERLINE 8-Fu | DOOR INWARD OPENING WITH DOUBLE WEATHER STRIP - BOTTOM DOOR RAIL 193

SECTIONS MASTERLINE 8-Fu | DOUBLE CASEM. D. INW. OPEN. WITH DOUB. WEATHER STRIP 194

SECTIONS MASTERLINE 8-Fu | DOUBLE CASEMENT DOOR INWARD OPEN. WITH DOUBLE WEATHER STRIP - BOTTOM DOOR RAIL 195

SECTIONS MASTERLINE 8-Fu | Z-T DOOR INWARD OPENING WITH DOUBLE WEATHER STRIP 196

SECTIONS MASTERLINE 8-Fu | Z-T DOOR INWARD OPENING WITH DOUBLE WEATHER STRIP - BOTTOM DOOR RAIL 197

SECTIONS MASTERLINE 8-Fu | COMBINED DOOR INWARD OPENING WITH DOUBLE WEATHER STRIP 198

SECTIONS MASTERLINE 8-Fu | COMBINED DOOR INWARD OPENING WITH DOUBLE WEATHER STRIP - BOTTOM DOOR RAIL 200

SECTIONS MASTERLINE 8-Fu | DOOR OUTWARD OPENING WITH DOUBLE WEATHER STRIP 201

SECTIONS MASTERLINE 8-Fu | COMBINED DOOR INWARD OPENING WITH DOUB. WEATHER STRIP - FIXED LIGHT 202

SECTIONS MASTERLINE 8-Fu | DOOR OUTWARD OPENING WITH DOUBLE WEATHER STRIP - BOTTOM DOOR RAIL 203

SECTIONS MASTERLINE 8-Fu | DOOR INW. OPEN. WITH DOOR LATCH 204

SECTIONS MASTERLINE 8-Fu | DOUBLE CASEMENT DOOR OUTWARD OPENING WITH DOUBLE WEATHER STRIP 205

SECTIONS MASTERLINE 8-Fu | DOOR INWARD OPENING WITH AUTOMATIC DRAUGHT EXCLUDER - BOTTOM DOOR RAIL 206

SECTIONS MASTERLINE 8-Fu | DOUBLE CASEMENT DOOR OUTWARD OPENING WITH DOUBLE WEATHER STRIP - BOTTOM DOOR RAIL 207

SECTIONS MASTERLINE 8-Fu | DOUBLE CASEMENT DOOR INWARD OPENING WITH AUTOMATIC DRAUGHT EXCLUDER 208

SECTIONS MASTERLINE 8-Fu | Z-T DOOR OUTWARD OPENING WITH DOUBLE WEATHER STRIP 209

SECTIONS MASTERLINE 8-Fu | DOUBLE CASEMENT DOOR INWARD OPENING WITH AUTOMATIC DRAUGHT EXCLUDER - BOTTOM DOOR RAIL 210

SECTIONS MASTERLINE 8-Fu | Z-T DOOR OUTWARD OPENING WITH DOUBLE WEATHER STRIP - BOTTOM DOOR RAIL 211

SECTIONS MASTERLINE 8-Fu | Z-T DOOR INWARD OPENING WITH AUTOMATIC DRAUGHT EXCLUDER 212

SECTIONS MASTERLINE 8-Fu | COMBINED DOOR OUTWARD OPENING WITH DOUBLE WEATHER STRIP 213

SECTIONS MASTERLINE 8-Fu | Z-T DOOR INWARD OPENING WITH AUTOMATIC DRAUGHT EXCLUDER - BOTTOM DOOR RAIL 215

SECTIONS MASTERLINE 8-Fu | COMBINED DOOR INWARD OPENING WITH AUTOMATIC DRAUGHT EXCLUDER 216

SECTIONS MASTERLINE 8-Fu | COMBINED DOOR OUTWARD OPENING WITH DOUBLE WEATHER STRIP - BOTTOM DOOR RAIL 217

SECTIONS MASTERLINE 8-Fu | COMBINED DOOR INWARD OPENING WITH AUTOMATIC DRAUGHT EXCLUDER - BOTTOM DOOR RAIL 218

SECTIONS MASTERLINE 8-Fu | COMBINED DOOR OUTWARD OPENING WITH DOUB. WEATHER STRIP - FIXED LIGHT 219

SECTIONS MASTERLINE 8-Fu | DOOR INWARD OPENING WITH BRUSH 220

SECTIONS MASTERLINE 8-Fu | DOOR OUTWARD OPENING WITH AUTOMATIC DRAUGHT EXCLUDER 221

SECTIONS MASTERLINE 8-Fu | DOOR INWARD OPENING WITH BRUSH - BOTTOM DOOR RAIL 222

SECTIONS MASTERLINE 8-Fu | DOOR OUTWARD OPENING WITH AUTOMATIC DRAUGHT EXCLUDER - BOTTOM DOOR RAIL 223

SECTIONS MASTERLINE 8-Fu | DOUBLE CASEMENT DOOR INWARD OPEN. WITH BRUSH 224

SECTIONS MASTERLINE 8-Fu | DOUBLE CASEMENT DOOR OUTWARD OPENING WITH AUTOMATIC DRAUGHT EXCLUDER 225

SECTIONS MASTERLINE 8-Fu | DOUBLE CASEMENT DOOR INWARD OPEN. WITH BRUSH - BOTTOM DOOR RAIL 226

SECTIONS MASTERLINE 8-Fu | DOUBLE CASEMENT DOOR OUTWARD OPENING WITH AUTOMATIC DRAUGHT EXCLUDER - BOTTOM DOOR RAIL 227

SECTIONS MASTERLINE 8-Fu | Z-T DOOR INWARD OPENING WITH BRUSH 228

SECTIONS MASTERLINE 8-Fu | Z-T DOOR OUTWARD OPENING WITH AUTOMATIC DRAUGHT EXCLUDER 229

SECTIONS MASTERLINE 8-Fu | Z-T DOOR OUTWARD OPENING WITH AUTOMATIC DRAUGHT EXCLUDER - BOTTOM DOOR RAIL 230

SECTIONS MASTERLINE 8-Fu | COMBINED DOOR OUTWARD OPENING WITH AUTOMATIC DRAUGHT EXCLUDER 231

SECTIONS MASTERLINE 8-Fu | COMBINED DOOR INWARD OPENING WITH BRUSH - BOTTOM DOOR RAIL 232

SECTIONS MASTERLINE 8-Fu | COMBINED DOOR OUTWARD OPENING WITH AUTOMATIC DRAUGHT EXCLUDER - BOTTOM DOOR RAIL 233

SECTIONS MASTERLINE 8-Fu Panic Door | DBL. CAS. DOOR OUTW. OPENING WITH DOUBLE WEATHER STRIP - DOUBLE PANIC EN179/1125 234

SECTIONS MASTERLINE 8-Fu | DOOR OUTWARD OPENING WITH BRUSH 235

SECTIONS MASTERLINE 8-Fu | DOOR OUTWARD OPENING WITH BRUSH - BOTTOM DOOR RAIL 236

SECTIONS MASTERLINE 8-Fu Panic Door | DBL. CAS. DOOR OUTW. OPENING WITH DOUBLE WEATHER STRIP - BOTTOM DOOR RAIL - DOUBLE PANIC EN179/1125 237

SECTIONS MASTERLINE 8-Fu | DOUBLE CASEM. DOOR OUTWARD OPENING WITH BRUSH 238

SECTIONS MASTERLINE 8-Fu Panic Door | Z-T DOOR OUTW. OPENING WITH DOUBLE WEATHER STRIP - DOUBLE PANIC EN179/1125 239

SECTIONS MASTERLINE 8-Fu | DOUBLE CASEMENT DOOR OUTWARD OPENING WITH BRUSH - BOTTOM DOOR RAIL 240

SECTIONS MASTERLINE 8-Fu Panic Door | Z-T DOOR OUTW. OPENING WITH DOUBLE WEATHER STRIP - BOTTOM DOOR RAIL - DOUBLE PANIC EN179/1125 241

SECTIONS MASTERLINE 8-Fu | Z-T DOOR OUTWARD OPENING WITH BRUSH 242

SECTIONS MASTERLINE 8-Fu Panic Door | DBL. CAS. DOOR OUTW. OPENING WITH AUTOMATIC DRAUGHT EXCLUDER - DOUBLE PANIC EN179/1125 243

SECTIONS MASTERLINE 8-Fu | Z-T DOOR OUTWARD OPENING WITH BRUSH - BOTTOM DOOR RAIL 244

SECTIONS MASTERLINE 8-Fu Panic Door | DBL. CAS. DOOR OUTW. OPENING WITH AUTOMATIC DRAUGHT EXCLUDER - BOTTOM DOOR RAIL - DOUBLE PANIC EN179/1125 245

SECTIONS MASTERLINE 8-Fu | COMBINED DOOR OUTWARD OPENING WITH BRUSH 246

SECTIONS MASTERLINE 8-Fu Panic Door | Z-T DOOR OUTW. OPENING WITH AUTOMATIC DRAUGHT EXCLUDER - DOUBLE PANIC EN179/1125 247

SECTIONS MASTERLINE 8-Fu | COMBINED DOOR OUTWARD OPENING WITH BRUSH - BOTTOM DOOR RAIL 248

SECTIONS MASTERLINE 8-Fu Panic Door | Z-T DOOR OUTW. OPENING WITH AUTOMATIC DRAUGHT EXCLUDER - BOTTOM DOOR RAIL - DOUBLE PANIC EN179/1125 249

SECTIONS MASTERLINE 8-Fu Anti Finger Trap Door | DOOR INWARD OPENING WITH DOUBLE WEATHER STRIP - ANTI FINGER TRAP 250

SECTIONS MASTERLINE 8-Fu Panic Door | DOUBLE CASEMENT DOOR OUTW. OPENING WITH BRUSH - DOUBLE PANIC EN179/1125 251

SECTIONS MASTERLINE 8-Fu Anti Finger Trap Door | DOUBLE CASEMENT DOOR INWARD OPEN. WITH DOUBLE WEATHER STRIP - ANTI FINGER TRAP 252

SECTIONS MASTERLINE 8-Fu Panic Door | DOUBLE CASEMENT DOOR OUTW. OPEN. WITH BRUSH - BOTTOM DOOR RAIL - DOUBLE PANIC EN179/1125 253

SECTIONS MASTERLINE 8-Fu Anti Finger Trap Door | Z-T DOOR INWARD OPENING WITH DOUBLE WEATHER STRIP - ANTI FINGER TRAP 254

SECTIONS MASTERLINE 8-Fu Panic Door | Z-TDOOR OUTW. OPENING WITH BRUSH - DOUBLE PANIC EN179/1125 255

SECTIONS MASTERLINE 8-Fu Anti Finger Trap Door | DOOR INWARD OPENING WITH BRUSH - ANTI FINGER TRAP 256

SECTIONS MASTERLINE 8-Fu Panic Door | Z-T DOOR OUTW. OPENING WITH BRUSH - BOTTOM DOOR RAIL - DOUBLE PANIC EN179/1125 257

SECTIONS MASTERLINE 8-Fu Anti Finger Trap Door | DOUBLE CASEMENT DOOR INWARD OPEN. WITH BRUSH - ANTI FINGER TRAP 258

SECTIONS MASTERLINE 8-Fu Panel Door | PANEL DOOR INWARD OPENING WITH DOUBLE WEATHER STRIP 259

SECTIONS MASTERLINE 8-Fu Anti Finger Trap Door | Z-T DOOR INWARD OPENING WITH BRUSH - ANTI FINGER TRAP 260

SECTIONS MASTERLINE 8-Fu Panel Door | Z-T PANEL DOOR INWARD OPENING WITH THRESHOLD 261

SECTIONS MASTERLINE 8-Fu Anti Finger Trap Door | DOOR OUTWARD OPENING WITH DOUBLE WEATHER STRIP - ANTI FINGER TRAP 262

SECTIONS MASTERLINE 8-Fu Panel Door | PANEL DOOR INWARD OPENING WITH DOOR LATCH 263

SECTIONS MASTERLINE 8-Fu Anti Finger Trap Door | DOUBLE CASEMENT DOOR OUTWARD OPENING WITH DOUBLE WEATHER STRIP - ANTI FINGER TRAP 264

SECTIONS MASTERLINE 8-Fu Panel Door | Z-T PANEL DOOR INWARD OPENING WITH AUTOMATIC DRAUGHT EXCLUDER 265

SECTIONS MASTERLINE 8-Fu Anti Finger Trap Door | Z-T DOOR OUTWARD OPENING WITH DOUBLE WEATHER STRIP - ANTI FINGER TRAP 266

SECTIONS MASTERLINE 8-Fu Panel Door | PANEL DOOR INWARD OPENING WITH BRUSH 267

SECTIONS MASTERLINE 8-Fu Anti Finger Trap Door | DOOR OUTWARD OPENING WITH BRUSH - ANTI FINGER TRAP 268

SECTIONS MASTERLINE 8-Fu Panel Door | Z-T PANEL DOOR INWARD OPENING WITH BRUSH 269

SECTIONS MASTERLINE 8-Fu Anti Finger Trap Door | DOUBLE CASEMENT DOOR OUTWARD OPENING WITH BRUSH - ANTI FINGER TRAP 270

SECTIONS MASTERLINE 8-Fu Panel Door | PANEL DOOR DOUBLE SIDED INWARD OPENING WITH DOUBLE WEATHER STRIP 271

SECTIONS MASTERLINE 8-Fu Anti Finger Trap Door | Z-T DOOR OUTWARD OPENING WITH BRUSH - ANTI FINGER TRAP 272

SECTIONS MASTERLINE 8-Fu Panel Door | Z-T PANEL DOOR DOUBLE SIDED INWARD OPENING WITH THRESHOLD 273

SECTIONS MASTERLINE 8-Fu Panel Door | PANEL DOOR OUTW. OPENING WITH DOUBLE WEATHER STRIP 274

SECTIONS MASTERLINE 8-Fu Panel Door | PANEL DOOR DOUBLE SIDED INWARD OPENING WITH AUTOMATIC DRAUGHT EXCLUDER 275

SECTIONS MASTERLINE 8-Fu Panel Door | Z-T PANEL DOOR OUTWARD OPENING WITH THRESHOLD 276

SECTIONS MASTERLINE 8-Fu Panel Door | Z-T PANEL DOOR DOUBLE SIDED INWARD OPENING WITH AUTOMATIC DRAUGHT EXCLUDER 277

SECTIONS MASTERLINE 8-Fu Panel Door | PANEL DOOR OUTWARD OPENING WITH DOOR LATCH 278

SECTIONS MASTERLINE 8-Fu Panel Door | PANEL DOOR DOUBLE SIDED INWARD OPENING WITH BRUSH 279

SECTIONS MASTERLINE 8-Fu Panel Door | Z-T PANEL DOOR OUTWARD OPENING WITH AUTOMATIC DRAUGHT EXCLUDER 280

SECTIONS MASTERLINE 8-Fu Panel Door | Z-T PANEL DOOR DOUBLE SIDED INWARD OPENING WITH BRUSH 281

SECTIONS MASTERLINE 8-Fu Panel Door | PANEL DOOR OUTWARD OPENING WITH BRUSH 282

SECTIONS MASTERLINE 8-Fu Panel Door | PANEL DOOR DOUBLE SIDED INWARD OPENING WITH SPY WINDOW 283

SECTIONS MASTERLINE 8-Fu Panel Door | Z-T PANEL DOOR OUTWARD OPENING WITH BRUSH 284

SECTIONS MASTERLINE 8-Fu Panel Door | PANEL DOOR DOUBLE SIDED INWARD OPENING WITH SPY WINDOW 285

SECTIONS MASTERLINE 8-Fu Panel Door | PANEL DOOR DOUBLE SIDED OUTWARD OPENING WITH DOUBLE WEATHER STRIP 286

SECTIONS MASTERLINE 8-Fu Panel Door | PANEL DOOR DOUBLE SIDED INWARD OPENING PASSIVE 287

SECTIONS MASTERLINE 8-Fu Panel Door | PANEL DOOR DOUBLE SIDED OUTWARD OPENING WITH AUTOMATIC DRAUGHT EXCLUDER 288

SECTIONS MASTERLINE 8-Fu Panel Door | Z-T PANEL DOOR DOUBLE SIDED OUTWARD OPENING WITH THRESHOLD 289

SECTIONS MASTERLINE 8-Fu Panel Door | Z-T PANEL DOOR DOUBLE SIDED OUTWARD OPENING WITH AUTOMATIC DRAUGHT EXCLUDER 290

SECTIONS MASTERLINE 8-Fu Panel Door | PANEL DOOR DOUBLE SIDED OUTWARD OPENING WITH BRUSH 291

SECTIONS MASTERLINE 8-Fu Pivot Door | COMBINED PIVOT DOOR INWARD OPENING - FIXED LIGHT 292

SECTIONS MASTERLINE 8-Fu Panel Door | Z-T PANEL DOOR DOUBLE SIDED OUTWARD OPENING WITH BRUSH 293

SECTIONS MASTERLINE 8-Fu Panel Door | PANEL DOOR DOUBLE SIDED OUTWARD OPENING PASSIVE 294

SECTIONS MASTERLINE 8-Fu Pivot Door | PIVOT DOOR INWARD OPENING 295

SECTIONS MASTERLINE 8-Fu Pivot Door | PIVOT DOOR INWARD OPENING ONE-SIDED PANEL 296

SECTIONS MASTERLINE 8-Fu Pivot Door | PIVOT DOOR INWARD OPENING DOUBLE SIDED PANEL 297

SECTIONS MASTERLINE 8-Fu Pivot Door | PIVOT DOOR OUTWARD OPENING 298

SECTIONS MASTERLINE 8-Fu Panel Door | MAGNETUDE PANEL DOOR DOUBLE SIDED INWARD OPENING WITH DOUBLE WEATHER STRIP 299

SECTIONS MASTERLINE 8-Fu Panel Door | MAGNETUDE Z-T PANEL DOOR INWARD OPENING WITH THRESHOLD 300

SECTIONS MASTERLINE 8-Fu Panel Door | MAGNETUDE PANEL DOOR INWARD OPENING WITH AUTOMATIC DRAUGHT EXCLUDER 301

SECTIONS MASTERLINE 8-Fu Panel Door | MAGNETUDE Z-T PANEL DOOR DOUBLE SIDED INWARD OPENING WITH AUTOMATIC DRAUGHT EXCLUDER 302

SECTIONS MASTERLINE 8-Fu Panel Door | MAGNETUDE PANEL DOOR INWARD OPENING WITH BRUSH 303

SECTIONS MASTERLINE 8-Fu Panel Door | MAGNETUDE Z-T PANEL DOOR INWARD OPENING WITH BRUSH 304

SECTIONS MASTERLINE 8-Fu Panel Door | MAGNETUDE PANEL DOOR DOUBLE SIDED INWARD OPENING WITH DOUBLE WEATHER STRIP 305

SECTIONS MASTERLINE 8-Fu Panel Door | MAGNETUDE Z-T PANEL DOOR DOUBLE SIDED INWARD OPENING WITH THRESHOLD 306

SECTIONS MASTERLINE 8-Fu Panel Door | MAGNETUDE PANEL DOOR DOUBLE SIDED INWARD OPENING WITH AUTOMATIC DRAUGHT EXCLUDER 307

SECTIONS MASTERLINE 8-Fu Panel Door | MAGNETUDE Z-T PANEL DOOR DOUBLE SIDED INWARD OPENING WITH AUTOMATIC DRAUGHT EXCLUDER 308

SECTIONS MASTERLINE 8-Fu Panel Door | MAGNETUDE PANEL DOOR DOUBLE SIDED INWARD OPENING WITH BRUSH 309

SECTIONS MASTERLINE 8-Fu Panel Door | MAGNETUDE Z-T PANEL DOOR DOUBLE SIDED INWARD OPENING WITH BRUSH 310

SECTIONS MASTERLINE 8-Fu Panel Door | MAGNETUDE PANEL DOOR ST -> HI 311

SECTIONS MASTERLINE 8-Fu Panel Door | MAGNETUDE PANEL DOOR HI -> HI+ 312

SECTIONS MASTERLINE 8-Fu Panel Door | MAGNETUDE PANEL DOOR OUTW. OPENING WITH DOUBLE WEATHER STRIP 313

SECTIONS MASTERLINE 8-Fu Panel Door | MAGNETUDE Z-T PANEL DOOR OUTWARD OPENING WITH THRESHOLD 314

SECTIONS MASTERLINE 8-Fu Panel Door | MAGNETUDE PANEL DOOR OUTWARD OPENING WITH DOOR LATCH 315

SECTIONS MASTERLINE 8-Fu Panel Door | MAGNETUDE Z-T PANEL DOOR OUTWARD OPENING WITH AUTOMATIC DRAUGHT EXCLUDER 316

SECTIONS MASTERLINE 8-Fu Panel Door | MAGNETUDE PANEL DOOR OUTWARD OPENING WITH BRUSH 317

SECTIONS MASTERLINE 8-Fu Panel Door | MAGNETUDE Z-T PANEL DOOR OUTWARD OPENING WITH BRUSH 318

SECTIONS MASTERLINE 8-Fu Panel Door | MAGNETUDE PANEL DOOR DOUBLE SIDED OUTWARD OPENING WITH DOUBLE WEATHER STRIP 319

SECTIONS MASTERLINE 8-Fu Panel Door | MAGNETUDE Z-T PANEL DOOR DOUBLE SIDED OUTWARD OPENING WITH THRESHOLD 320

SECTIONS MASTERLINE 8-Fu Panel Door | MAGNETUDE PANEL DOOR DOUBLE SIDED OUTWARD OPENING WITH AUTOMATIC DRAUGHT EXCLUDER 321

SECTIONS MASTERLINE 8-Fu Panel Door | MAGNETUDE Z-T PANEL DOOR DOUBLE SIDED OUTWARD OPENING WITH AUTOMATIC DRAUGHT EXCLUDER 322

SECTIONS MASTERLINE 8-Fu Panel Door | MAGNETUDE PANEL DOOR DOUBLE SIDED OUTWARD OPENING WITH BRUSH 323

SECTIONS MASTERLINE 8-Fu Panel Door | MAGNETUDE Z-T PANEL DOOR DOUBLE SIDED OUTWARD OPENING WITH BRUSH 324

SECTIONS MASTERLINE 8-Fu | CONNECTIONS WITH OTHER SYSTEMS - MASTERLINE 10 325

Production Steps / Productiestappen / Étapes de production / Verarbeitungs-Zeichnungen 327

PROCESS FLOW | PROCESS FLOW 328

SAWING CLAMP | CLAMP BLOCKS SAW 095.B600.00 331

CLAMP BLOCKS OVERVIEW | CLAMP BLOCKS SAW 095.B600.00 354

MC CLAMP | CLAMP BLOCKS CNC MACHINERY 095.C300.00 355

COPY ROUTER CLAMP | CLAMP BLOCKS MILLING MACHINE T-JONCTION 095.AKF6.00 385

T SCREW MC | T-BRACKET WITH SCREW 391

T SCREW MC VENT | T-BRACKET WITH SCREW 392

T SCREW MC | T-BRACKET WITH SCREW 394

T SCREW MFPT VENT | T-BRACKET WITH SCREW 396

T SCREW MFPT | T-BRACKET WITH SCREW 398

T SCREW JIG VENT | T-BRACKET WITH SCREW 400

T SCREW JIG | T-BRACKET WITH SCREW 402

T BYSCREW MC | BOTTOM DOOR RAILS 404

T BYSCREW MC | T-CONNECTION WITH SCREW 406

T BYSCREW MFPT | T-CONNECTION WITH SCREW 412

T BYSCREW MFPT | FIXATION TRANSOM-MULLION 418

T BYSCREW JIG | BOTTOM DOOR RAILS 419

T VAR MC | T-CONNECTION ADJUSTABLE 421

T VAR JIG | T-CONNECTION ADJUSTABLE 427

CORNER SCREW MC | GLUE INJECTION + CORNER CONNECTION 197.F900.00 433

CORNER SCREW MC | GLUE INJECTION + CORNER CONNECTION 197.D800.00 455

CORNER SCREW MC | GLUE INJECTION + CORNER CONNECTION 197.F900.00 483

CORNER SCREW MC | GLUE INJECTION + CORNER CONNECTION 197.D800.00 491

CORNER SCREW MC | GLUE INJECTION + CORNER CONNECTION 197.F900.00 499

CORNER SCREW MC | GLUE INJECTION + CORNER CONNECTION 197.D800.00 503

CORNER SCREW MC | GLUE INJECTION + CORNER CONNECTION 197.F900.00 506

CORNER SCREW MC | GLUE INJECTION + CORNER CONNECTION 197.D600.00 510

CORNER SCREW MC | SCREW CORNER CONNECTION 097.P300.00 + 097.E700.00 513

CORNER SCREW MC GLUE INJECTION | GLUE INJECTION + CORNER CONNECTION 197.F900.00 517

CORNER SCREW MFPT | GLUE INJECTION + CORNER CONNECTION 197.F900.00 519

CORNER SCREW MFPT | GLUE INJECTION + CORNER CONNECTION 197.D800.00 538

CORNER SCREW MFPT | GLUE INJECTION + CORNER CONNECTION 197.F900.00 546

CORNER SCREW MFPT | GLUE INJECTION + CORNER CONNECTION 197.D800.00 554

CORNER SCREW MFPT | GLUE INJECTION + CORNER CONNECTION 197.F900.00 559

CORNER SCREW MFPT | GLUE INJECTION + CORNER CONNECTION 197.D600.00 567

CORNER SCREW MFPT | SCREW CORNER CONNECTION 097.P300.00 + 097.E700.00 581
CORNER SCREW MFPT GLUE INJECTION | GLUE INJECTION + CORNER CONNECTION 197.F900.00 587
CORNER SCREW JIG | GLUE INJECTION + CORNER CONNECTION 197.F900.00 595
CORNER SCREW JIG | GLUE INJECTION + CORNER CONNECTION 197.D800.00 616
CORNER SCREW JIG | GLUE INJECTION + CORNER CONNECTION 197.F900.00 632
CORNER SCREW JIG | GLUE INJECTION + CORNER CONNECTION 197.D800.00 640
CORNER SCREW JIG | GLUE INJECTION + CORNER CONNECTION 197.F900.00 643
CORNER SCREW JIG | GLUE INJECTION + CORNER CONNECTION 197.D800.00 647
CORNER SCREW JIG | GLUE INJECTION + CORNER CONNECTION 197.F900.00 650
CORNER SCREW JIG | GLUE INJECTION + CORNER CONNECTION 197.D600.00 654
CORNER SCREW JIG GLUE INJECTION | GLUE INJECTION + CORNER CONNECTION 197.F900.00 656
REBATE | REBATE SUPPORTS 658
CORNER VAR MC | SCREW CORNER CLEAT ADJUSTABLE 664
CORNER VAR JIG | SCREW CORNER CLEAT ADJUSTABLE 670
GLASS CORNER | ASSEMBLY GLASS CORNER 676
ASSEMBLY FRAME | ASSEMBLY OUTER-FRAME HIDDEN DRAINAGE 685
CORNER CRIMP | CRIMPING MACHINE 095.B500.00 686
CORNER CRIMP | OUTER FRAME ASSEMBLY MEDIUM TUBULAR 692
CORNER CRIMP | CRIMPING MACHINE 095.B500.00 693
CORNER CRIMP | CRIMPING MACHINE 095.H800.00 696
CORNER CRIMP | CRIMPING MACHINE 095.B500.00 706
CORNER CRIMP | CRIMPING MACHINE 095.H800.00 711
CONNECTING BRACKET | CRIMPING MACHINE 095.B500.00 717
CUTTING GASKET | CENTRAL GASKET 718
VULCANISED FRAME | CENTRAL GASKET 720
MILLING GLAZING BEAD | GLAZING METHOD 721
MILLING GLAZING BEAD | GLAZING METHOD - ADDITIONAL GLASS SUPPORT 727

Glazing Tables / Beglazingstabellen / Tableaux de vitrage / Verglasungstabellen 729

GLAZING METHOD MASTERLINE 8 RC2 | GLAZING METHOD RC2 730

Production Steps / Productiestappen / Étapes de production / Verarbeitungs-Zeichnungen 731

ASSEMBLY SUPPORT PROFILE RC2 | MONTAGE SUPPORT PROFILE WINDOW BURGULAR PROOF RC2 732
ASSEMBLY SUPPORT PROFILE RC3 | MONTAGE FRAME PROFILE BURGLARPROOF RC3 741
CORNER SOLUTION RC2 RC3 | CORNER SOLUTION RC2/RC3 745
CONNECTION PROFILE DOOR RC3 | FIXATION ADDITIONAL PROFILES RC3 747
DRAINAGE POSITION GLASS SUPPORT | POSITION GLASS SUPPORT - DRAINAGE 749
DRAINAGE MC | DRAINAGE VENT 752

DRAINAGE MC | DRAINAGE FRAME Re - De 756
DRAINAGE MC | DRAINAGE FRAME 758
DRAINAGE MC | DRAINAGE CHANGEOVER PROFILE 762
DRAINAGE MC | DRAINAGE FRAME 766
DRAINAGE MC | HIDDEN DRAINAGE FRAME 770
DRAINAGE MC HIDDEN | DRAINAGE OUTER FRAME 774
DRAINAGE MC | DRAINAGE OUTER FRAME 776
DRAINAGE MC | DRAINAGE TRANSOM-MULLION 778
DRAINAGE MC | DRAINAGE FLOOR PROFILE 780
DRAINAGE MC | DRAINAGE FRAME 782
DRAINAGE MC | DRAINAGE FLOOR PROFILE 783
DRAINAGE MC | DRAINAGE VENT 785
DRAINAGE MC | DRAINAGE TRANSOM-MULLION 787
DRAINAGE MC | DRAINAGE VENT FLUSH DOOR 791
DRAINAGE MC | DRAINAGE FLOOR PROFILE FLUSH DOOR 795
DRAINAGE MFPT | DRAINAGE FRAME 797
DRAINAGE MFPT | DRAINAGE TRANSOM-MULLION 801
DRAINAGE MFPT | DRAINAGE VENT 803
DRAINAGE MFPT | DRAINAGE VENT FLUSH DOOR 806
DRAINAGE JIG | DRAINAGE FRAME 810
DRAINAGE JIG | DRAINAGE TRANSOM-MULLION 814
DRAINAGE JIG | DRAINAGE VENT FLUSH DOOR 816
DRAINAGE CR | DRAINAGE VENT 820
DRAINAGE CR | DRAINAGE FRAME 824
DRAINAGE CR | DRAINAGE OUTER FRAME 831
DRAINAGE CR | HIDDEN DRAINAGE FRAME 835
DRAINAGE CR | DRAINAGE TRANSOM-MULLION 837
DRAINAGE CR | DRAINAGE FRAME 839
DRAINAGE CR | DRAINAGE VENT 840
DRAINAGE CR | DRAINAGE VENT FLUSH DOOR 842
DRAINAGE CR | DRAINAGE FLOOR PROFILE FLUSH DOOR 846
DRAINAGE MC HIDDEN | HIDDEN DRAINAGE FRAME Re - De - DRAINAGE PIECE 4MM 848
DRAINAGE MC HIDDEN | HIDDEN DRAINAGE FRAME Re - De - DRAINAGE PIECE 8MM 850
DRAINAGE MC HIDDEN | HIDDEN DRAINAGE TRANSOM-MULLION Re - De - DRAINAGE PIECE 8MM 854
DRAINAGE MC HIDDEN | HIDDEN DRAINAGE TRANSOM-MULLION Re - De - DRAINAGE PIECE 4MM 856
DRAINAGE MC HIDDEN | HIDDEN DRAINAGE FRAME 858

DRAINAGE MC HIDDEN | HIDDEN DRAINAGE FRAME - DRAINAGE PIECE 4MM 862
DRAINAGE MC HIDDEN | HIDDEN DRAINAGE FRAME - DRAINAGE PIECE 8MM 864
DRAINAGE MC HIDDEN | HIDDEN DRAINAGE TRANSOM-MULLION - DRAINAGE PIECE 4MM 866
DRAINAGE MC HIDDEN | HIDDEN DRAINAGE TRANSOM-MULLION - DRAINAGE PIECE 8MM 868
DRAINAGE CR HIDDEN | HIDDEN DRAINAGE FRAME Re - De - DRAINAGE PIECE 4MM 870
DRAINAGE CR HIDDEN | HIDDEN DRAINAGE TRANSOM-MULLION Re - De - DRAINAGE PIECE 4MM 872
DRAINAGE CR HIDDEN | HIDDEN DRAINAGE TRANSOM-MULLION Re - De - DRAINAGE PIECE 8MM 874
DRAINAGE CR HIDDEN | HIDDEN DRAINAGE FRAME 876
DRAINAGE CR HIDDEN | HIDDEN DRAINAGE FRAME - DRAINAGE PIECE 4MM 877
DRAINAGE CR HIDDEN | HIDDEN DRAINAGE FRAME - DRAINAGE PIECE 8MM 879
DRAINAGE CR HIDDEN | HIDDEN DRAINAGE TRANSOM-MULLION - DRAINAGE PIECE 8MM 881
DRAINAGE CR HIDDEN | HIDDEN DRAINAGE TRANSOM-MULLION - DRAINAGE PIECE 4MM 883
DECOMPRESSION | DECOMPRESSION 885
DOUBLE CASEMENT | ASSEMBLY DOUBLE CASEMENT PROFILE 894
DOUBLE CASEMENT INTEGRATED | INTEGRATED DOUBLE CASEMENT WINDOW 901
MILLING CHANGEOVER PROFILE PIVOT DOOR | SCREW CORNER CONNECTION CHANGEOVER PROFILE 915
DRAINAGE NO TOOL VENTILATION VENT | DRAINAGE VENTILATION VENT 919
DECOMPRESSION VENTILATION VENT | DECOMPRESSION 921
MILLING HINGE VENTILATION VENT | VENTILATION VENT 922
ASSEMBLY END PIECE VENTILATION VENT | END PIECES VENTILATION VENT 924
MILLING END PIECE VENTILATION VENT | END PIECES VENTILATION VENT 926
ASSEMBLY INSULATION GASKET (HI) VENTILATION VENT | VENTILATION VENT HI+ 928
DRAINAGE MC DECORATION PROFILE | DECORATION PROFILE 930
DRAINAGE MFPT DECORATION PROFILE | DECORATION PROFILE 933
DRAINAGE CR DECORATION PROFILE | DECORATION PROFILE 936
NAILING FIN | NAILING FIN 939
ASSEMBLY RECEPTOR PROFILE | CEILING AND FLOOR CONNECTION 942
ASSEMBLY SUPPORTING PIECE | SUPPORTING BLOCK 169.8771.04 944
ANCHORING | ANCHOR ADJUFIX - DOOR 948
ANCHORING | ANCHOR ADJUFIX - WINDOW 950
OVERVIEW CORNER CLEATS WINDOW-DOOR | POSITIONING OF CORNER CLEATS 954
DRAINAGE MC WINDOW-DOOR | DRAINAGE VENT 958
DRAINAGE MC WINDOW-DOOR | DRAINAGE VENT Re - De 960
DRAINAGE MC WINDOW-DOOR | DRAINAGE VENT 961
DRAINAGE MC WINDOW-DOOR | DRAINAGE VENT Re - De 962
DRAINAGE MC WINDOW-DOOR | DRAINAGE VENT 964

DRAINAGE MFPT WINDOW-DOOR | DRAINAGE VENT 970

DRAINAGE CR WINDOW-DOOR | DRAINAGE VENT 977

ASSEMBLY END PIECE WINDOW-DOOR | ASSEMBLY END PIECES 989

WINDOW-DOOR BRUSH | WINDOW-DOOR WITH BRUSH 990

DOOR AUTOMATIC SEALING WINDOW-DOOR | AUTOMATIC DRAUGHT EXCLUDER 994

OVERVIEW CORNER CLEATS BALCONY DOOR | POSITIONING OF CORNER CLEATS 996

DRAINAGE MC BALCONY DOOR | DRAINAGE VENT 998

DRAINAGE MFPT BALCONY DOOR | DRAINAGE VENT 1002

DRAINAGE JIG BALCONY DOOR | DRAINAGE VENT 1006

DRAINAGE CR BALCONY DOOR | DRAINAGE VENT 1009

DECOMPRESSION BALCONY DOOR | DECOMPRESSION 1014

BOTTOM SOLUTION BALCONY DOOR | BOTTOM SECTION BALCONY DOOR 1016

BOTTOM SOLUTION BALCONY DOOR | BOTTOM SECTION BALCONY DOOR - HIDDEN VENT 1034

ASSEMBLY END PIECE BALCONY DOOR | ASSEMBLY END PIECES 1036

ASSEMBLY COMBINED FRAME BALCONY DOOR | ASSEMBLY COMBINED FRAME - BALCONY DOOR 1037

ASSEMBLY COMBINED FRAME BALCONY DOOR | ASSEMBLY COMBINED FRAME - BALCONY DOOR - VARIANT 1049

ASSEMBLY COMBINED FRAME BALCONY DOOR | ASSEMBLY COMBINED FRAME - BALCONY DOOR 1052

OVERVIEW CORNER CLEATS DOOR | POSITIONING OF CORNER CLEATS 1055

CORNER SCREW MC PANEL DOOR | GLUE INJECTION + CORNER CONNECTION 197.D600.00 1057

CORNER SCREW MC PANEL DOOR | SCREW CORNER CONNECTION 097.P300.00 + 097.E700.00 1060

CORNER SCREW MFPT PANEL DOOR | GLUE INJECTION + CORNER CONNECTION 197.D600.00 1061

CORNER SCREW MFPT PANEL DOOR | SCREW CORNER CONNECTION 097.P300.00 + 097.E700.00 1082

CORNER SCREW JIG PANEL DOOR | GLUE INJECTION + CORNER CONNECTION 197.D600.00 1084

GLUE MC | GLUE INJECTION 097.P400.00 + 097.E700.00 1087

GLUE MFPT | GLUE INJECTION 097.P400.00 + 097.E700.00 1092

GLUE MC PANEL DOOR | GLUE INJECTION 097.P400.00 + 097.E700.00 1100

GLUE MFPT PANEL DOOR | GLUE INJECTION 097.P400.00 + 097.E700.00 1101

DECOMPRESSION DOOR | DECOMPRESSION 1103

ASSEMBLY END PIECE Z-T DOOR | END PIECES Z-T DOOR 1105

DOUBLE CASEMENT DOOR BRUSH | ASSEMBLY DOUBLE CASEMENT PROFILE INWARD OPENING 1111

DOUBLE CASEMENT DOOR WEATHER STRIP | ASSEMBLY DOUBLE CASEMENT PROFILE INWARD OPENING 1115

DOUBLE CASEMENT DOOR WEATHER STRIP | ASSEMBLY DOUBLE CASEMENT PROFILE OUTWARD OPENING 1119

DOUBLE CASEMENT DOOR AUTOMATIC SEALING | ASSEMBLY DOUBLE CASEMENT PROFILE INWARD OPENING 1123

DOUBLE CASEMENT AUTOMATIC SEALING DOOR | ASSEMBLY DOUBLE CASEMENT PROFILE OUTWARD OPENING 1124

DOOR BRUSH INWARD OPENING | DOOR INWARD OPENING WITH BRUSH - FLOOR PROFILE	1128
DOOR BRUSH INWARD OPENING | DOOR INWARD OPENING WITH BRUSH	1129
CONNECTION | CW50 CONNECTION	1132
ASSEMBLY INSULATION GASKET (HI) | ASSEMBLY INSULATION GASKET 087.9940.04 / 087.9941.04	1135
DOOR WEATHER STRIP INWARD OPENING | DOUBLE CASEMENT DOOR INWARD OPEN. WITH DOUBLE WEATHER STRIP - BOTTOM DOOR RAIL	1137
DOOR WEATHER STRIP INWARD OPENING | DOOR INWARD OPENING WITH DOUBLE WEATHER STRIP - BOTTOM DOOR RAIL	1139
DOOR WEATHER STRIP INWARD OPENING | DOOR INWARD OPENING WITH DOUBLE WEATHER STRIP	1145
COMBINED DOOR WEATHER STRIP INWARD OPENING | COMBINED DOOR INWARD OPENING WITH DOUBLE WEATHER STRIP - BOTTOM DOOR RAIL	1149
COMBINED DOOR WEATHER STRIP INWARD OPENING | COMBINED DOOR INWARD OPENING WITH DOUBLE WEATHER STRIP	1151
DOOR AUTOMATIC SEALING INWARD OPENING | DOOR INW. OPEN. WITH DOOR LATCH	1153
DOOR AUTOMATIC SEALING INWARD OPENING | DOOR INWARD OPENING WITH AUTOMATIC DRAUGHT EXCLUDER - BOTTOM DOOR RAIL	1156
COMBINED DOOR AUTOMATIC SEALING INWARD OPENING | COMBINED DOOR INWARD OPENING WITH AUTOMATIC DRAUGHT EXCLUDER	1159
COMBINED DOOR AUTOMATIC SEALING INWARD OPENING | COMBINED DOOR INWARD OPENING WITH AUTOMATIC DRAUGHT EXCLUDER - BOTTOM DOOR RAIL	1161
DOOR AUTOMATIC BRUSH INWARD OPENING | DOOR INWARD OPENING WITH BRUSH - BOTTOM DOOR RAIL	1163
COMBINED DOOR BRUSH INWARD OPENING | COMBINED DOOR INWARD OPENING 'BRUSH'	1166
COMBINED DOOR AUTOMATIC BRUSH INWARD OPENING | COMBINED DOOR INWARD OPENING WITH BRUSH - BOTTOM DOOR RAIL	1168
DOOR WEATHER STRIP OUTWARD OPENING | DOOR OUTWARD OPENING WITH DOUBLE WEATHER STRIP	1170
DOOR WEATHER STRIP OUTWARD OPENING | DOOR OUTWARD OPENING WITH DOUBLE WEATHER STRIP - BOTTOM DOOR RAIL	1177
COMBINED DOOR WEATHER STRIP OUTWARD OPENING | COMBINED DOOR OUTWARD OPENING WITH DOUBLE WEATHER STRIP - BOTTOM DOOR RAIL	1180
COMBINED DOOR WEATHER STRIP OUTWARD OPENING | COMBINED DOOR OUTWARD OPENING WITH DOUBLE WEATHER STRIP	1182
DOOR AUTOMATIC SEALING OUTWARD OPENING | DOOR OUTWARD OPENING WITH AUTOMATIC DRAUGHT EXCLUDER - BOTTOM DOOR RAIL	1184
DOOR AUTOMATIC SEALING OUTWARD OPENING | DOOR OUTWARD OPENING WITH AUTOMATIC DRAUGHT EXCLUDER	1187
COMBINED DOOR AUTOMATIC SEALING OUTWARD OPENING | COMBINED DOOR OUTWARD OPENING WITH AUTOMATIC DRAUGHT EXCLUDER	1190
COMBINED DOOR AUTOMATIC SEALING OUTWARD OPENING | COMBINED DOOR OUTWARD OPENING WITH AUTOMATIC DRAUGHT EXCLUDER - BOTTOM DOOR RAIL	1192
DOOR BRUSH OUTWARD OPENING | DOOR OUTWARD OPENING WITH BRUSH	1194
DOOR AUTOMATIC BRUSH OUTWARD OPENING | DOOR OUTWARD OPENING WITH BRUSH - BOTTOM DOOR RAIL	1197

COMBINED DOOR BRUSH OUTWARD OPENING | COMBINED DOOR OUTWARD OPENING WITH BRUSH	1200
COMBINED DOOR BRUSH OUTWARD OPENING | COMBINED DOOR OUTWARD OPENING WITH BRUSH - BOTTOM DOOR RAIL	1202
PANIC DOOR BRUSH OUTWARD OPENING | DOOR OUTW. OPENING WITH BRUSH - DOUBLE PANIC EN179/1125	1204
PANIC DOOR AUTOMATIC SEALING OUTWARD OPENING | DOOR OUTW. OPENING WITH AUTOMATIC DRAUGHT EXCLUDER - DOUBLE PANIC EN179/1125	1207
PANIC DOOR AUTOMATIC SEALING OUTWARD OPENING | DOOR OUTW. OPENING WITH AUTOMATIC DRAUGHT EXCLUDER - BOTTOM DOOR RAIL - DOUBLE PANIC EN179/1125	1210
PANIC DOOR AUTOMATIC BRUSH OUTWARD OPENING | DOOR OUTW. OPENING WITH BRUSH - BOTTOM DOOR RAIL - DOUBLE PANIC EN179/1125	1213
PANIC DOOR WEATHER STRIP OUTWARD OPENING | DOOR OUTW. OPENING WITH DOUBLE WEATHER STRIP - DOUBLE PANIC EN179/1125	1216
PANIC DOOR WEATHER STRIP OUTWARD OPENING | DOOR OUTW. OPENING WITH DOUBLE WEATHER STRIP - BOTTOM DOOR RAIL - DOUBLE PANIC EN179/1125	1219
ASSEMBLY END PIECE PANIC DOOR Z-T | END PIECES Z-T PANIC DOOR	1222
ANTI FINGER TRAP DOOR BRUSH OUTWARD OPENING | DOOR INWARD OPENING WITH BRUSH - ANTI FINGER TRAP	1224
ANTI FINGER TRAP DOOR BRUSH OUTWARD OPENING | DOOR OUTWARD OPENING WITH BRUSH - ANTI FINGER TRAP	1226
ANTI FINGER DOOR WEATHER STRIP INWARD OPENING | DOOR INWARD OPENING WITH DOUBLE WEATHER STRIP - ANTI FINGER TRAP	1229
MILLING PROFILE ANTI FINGER TRAP DOOR | DOOR INWARD OPENING WITH DOUBLE WEATHER STRIP - ANTI FINGER TRAP	1232
ANTI FINGER TRAP DOOR WEATHER STRIP OUTWARD OPENING | DOOR OUTWARD OPENING WITH DOUBLE WEATHER STRIP - ANTI FINGER TRAP	1238
DRAINAGE CR PANEL DOOR | DRAINAGE VENT	1242
DRAINAGE MC PANEL DOOR | DRAINAGE VENT	1243
ASSEMBLY END PIECE PANEL DOOR | END PIECES Z-T PANEL DOOR	1244
GLUEING PANEL PANEL DOOR | GLUE PANEL	1246
PANEL DOOR BRUSH INWARD OPENING | PANEL DOOR INWARD OPENING WITH BRUSH	1248
PANEL DOOR WEATHER STRIP INWARD OPENING | PANEL DOOR INWARD OPENING WITH DOUBLE WEATHER STRIP	1250
PANEL DOOR AUTOMATIC SEALING INWARD OPENING | PANEL DOOR INWARD OPENING WITH DOOR LATCH	1252
PANEL DOOR DOUBLE SIDED BRUSH INWARD OPENING | PANEL DOOR DOUBLE SIDED INWARD OPENING WITH BRUSH	1254
PANEL DOOR DOUBLE SIDED WEATHER STRIP INWARD OPENING | PANEL DOOR DOUBLE SIDED INWARD OPENING WITH DOUBLE WEATHER STRIP	1256
PANEL DOOR DOUBLE SIDED AUTOMATIC SEALING INWARD OPENING | PANEL DOOR DOUBLE SIDED INWARD OPENING WITH AUTOMATIC DRAUGHT EXCLUDER	1258
PANEL DOOR BRUSH OUTWARD OPENING | PANEL DOOR OUTWARD OPENING WITH BRUSH	1260
PANEL DOOR WEATHER STRIP OUTWARD OPENING | PANEL DOOR OUTW. OPENING WITH DOUBLE WEATHER STRIP	1262

PANEL DOOR WEATHER STRIP OUTWARD OPENING | PANEL DOOR DOUBLE SIDED OUTWARD OPENING WITH DOUBLE WEATHER STRIP 1264

PANEL DOOR DOUBLE SIDED BRUSH OUTWARD OPENING | PANEL DOOR DOUBLE SIDED OUTWARD OPENING WITH BRUSH 1266

PANEL DOOR DOUBLE SIDED AUTOMATIC SEALING OUTWARD OPENING | PANEL DOOR DOUBLE SIDED OUTWARD OPENING WITH AUTOMATIC DRAUGHT EXCLUDER 1268

DRAINAGE MC PIVOT DOOR | DRAINAGE PIVOT DOOR 1270

PROFILE COMPOSITION PIVOT DOOR | PROFILE COMPOSITION PIVOT DOOR 1272

PIVOT DOOR INWARD OPENING | PIVOT DOOR INWARD OPENING 1273

PIVOT DOOR OUTWARD OPENING | PIVOT DOOR OUTWARD OPENING 1277

ASSEMBLY VENT PIVOT DOOR | ASSEMBLY VENT 1281

ASSEMBLY FRAME PIVOT DOOR XL | CORNER CONNECTION OUTER FRAME 1284

SEALING T-CONNECTION PIVOT DOOR XL | SEALING PIECES T-CONNECTION 1286

DRAINAGE GUTTER FLUSH DOOR | DRAINAGE GUTTER - FLOOR PROFILE FLUSH DOOR 1287

DRAINAGE MC GUTTER FLUSH DOOR | DRAINAGE GUTTER - FLOOR PROFILE FLUSH DOOR 1289

DRAINAGE CR GUTTER FLUSH DOOR | DRAINAGE GUTTER - FLOOR PROFILE FLUSH DOOR 1291

DRAINAGE GUTTER DOOR BRUSH | DRAINAGE GUTTER - DOOR WITH BRUSH 1293

DRAINAGE MC GUTTER DOOR BRUSH | DRAINAGE GUTTER - DOOR WITH BRUSH 1294

DRAINAGE CR GUTTER DOOR BRUSH | DRAINAGE GUTTER - DOOR WITH BRUSH 1295

DRAINAGE GUTTER BALCONY DOOR | DRAINAGE GUTTER - FLOOR PROFILE BALCONY DOOR 1296

DRAINAGE MC GUTTER BALCONY DOOR | DRAINAGE GUTTER - FLOOR PROFILE BALCONY DOOR 1298

DRAINAGE CR GUTTER BALCONY DOOR | DRAINAGE GUTTER - FLOOR PROFILE BALCONY DOOR 1300

ASSEMBLY GUTTER | GUTTER ASSEMBLY 1302

ADJUSTMENT HINGES PIVOT DOOR XL | HINGES PIVOT DOOR 1305

ASSEMBLY ACCESS HATCH PIVOT DOOR XL | ACCES HATCH ASSEMBLY 1311

ASSEMBLY BASE UNIT 90° | ASSEMBLING BASE UNIT 90° 1313

ASSEMBLY COMBINED FRAME BALCONY DOOR 2024 | ASSEMBLY COMBINED FRAME - BALCONY DOOR + HIDDEN VENT 1314

ASSEMBLY END PIECE BALCONY DOOR 2024 | ASSEMBLY VENT END PIECES - ADA 1318

ASSEMBLY END PIECE LANDSCAPE PIVOT DOOR | INSTALLATION 169.7535.04 FRAME 1320

ASSEMBLY END PIECE MAGNETUDE PANEL DOOR | END PIECES Z-T MAGNETUDE PANEL DOOR 1322

ASSEMBLY GLASS BALUSTRADE | ASSEMBLY BALUSTRADE 1324

ASSEMBLY HINGE DR HAHN VL BAND AT | VL-BAND - ASSEMBLY HINGES 1328

Hardware Info / Beslaginformatie / Informations de quincaillerie / Beschlag-informationen 1332

ASSEMBLY HINGE ROLLENBAND | ROLLENBAND - ASSEMBLY HINGES 1333

Production Steps / Productiestappen / Étapes de production / Verarbeitungs-Zeichnungen 1334

ASSEMBLY LOWERING PROFILE BALCONY DOOR 2024 | LOWERING PROFILE MONTAGE + END PIECES 1335

ASSEMBLY LOWERING PROFILE BALCONY DOOR 2024 | LOWERING PROFILE MONTAGE + END PIECES - HIDDEN VENT	1336
ASSEMBLY PANEL MAGNETUDE PANEL DOOR | ASSEMBLY MAGNETUDE PANEL	1337
ASSEMBLY PANEL WINDOW-DOOR | ASSEMBLY PANEL	1339
ASSEMBLY SILL BRICKWORK | SYNTHETIC SILL/THRESHOLD - TRADITIONAL BRICKWORK	1341
ASSEMBLY SILL BRICKWORK | ALU SILL/THRESHOLD - TRADITIONAL BRICKWORK	1344
ASSEMBLY SILL PLASTERING | ALU SILL/THRESHOLD - PLASTERING	1347
ASSEMBLY SILL SILL | SILL	1352
ASSEMBLY VENT LANDSCAPE PIVOT DOOR | ASSEMBLY VENT	1353
ASSEMBLY VENT PIVOT DOOR XL | ASSEMBLY VENT	1363
ASSEMBLY VENT PIVOT DOOR XL | CORNER CONNECTION VENT	1369
ASSEMBLY VENT PIVOT DOOR XL | ASSEMBLY VENT	1371
BALCONY DOOR AUTOMATIC SEALING OUTWARD OPENING 2024 | BOTTOM CONNECTION - ADA	1373
BALCONY DOOR WEATHER STRIP | BALCONY DOOR SINGLE INWARD OPENING	1374
BALCONY DOOR WEATHER STRIP BALCONY DOOR 2024 | BALCONY DOOR DOUBLE CASEMENT INWARD OPENING - OPTION A	1378
BALCONY DOOR WEATHER STRIP OUTWARD OPENING 2024 | BALCONY DOOR DOUBLE OUTWARD OPENING OPTION A	1382
BOTTOM SOLUTION BALCONY DOOR 2024 | BOTTOM SECTION BALCONY DOOR	1386
BOTTOM SOLUTION BALCONY DOOR 2024 | BOTTOM SECTION BALCONY DOOR - HIDDEN VENT	1390
BOTTOM SOLUTION BALCONY DOOR 2024 | BOTTOM SECTION BALCONY DOOR	1394
CERTIFICATES DOORS RC2 MASTERLINE 8-AP | CERTIFICATES DOORS RC2	1396
CERTIFICATES DOORS RC3 MASTERLINE 8-AP | CERTIFICATES DOORS RC3	1397
CERTIFICATES WINDOWS MASTERLINE 8-AP | CERTIFICATES WINDOWS	1398
CHANGEOVER PROFILE DOOR | CHANGEOVER PROFILE	1400
CLAMP BLOCKS OVERVIEW MASTERLINE 8 | CLAMP BLOCKS	1402
CLASSIFICATIONS WINDOWS MASTERLINE 8-AP | CLASSIFICATIONS WINDOWS	1403
CLASSIFICATIONS WINDOWS MASTERLINE 8-AP | OVERVIEW CLASSIFICATIONS WINDOWS	1404
CONNECTION SlimWall 35 | CONNECTION WITH OTHER SYSTEMS	1405
CONNECTION MasterPatio | CONNECTIONS WITH OTHER SYSTEMS	1410
CORNER CONNECTION | GLUE INJECTION + CORNER CONNECTION 197.F900.00	1426
CORNER CONNECTION VENT | SCREW CORNER CLEAT ADJUSTABLE VENT	1430
CORNER CONNECTION VENT LANDSCAPE PIVOT DOOR | CORNER CONNECTION VENT	1431
CORNER CONNECTION VENT PIVOT DOOR XL | CORNER CONNECTION VENT	1441
CORNER SCREW | GLUE INJECTION + CORNER CONNECTION 197.D600.00	1447
DECOMPRESSION BALCONY DOOR BALCONY DOOR 2024 | DECOMPRESSION	1451
DECOMPRESSION VENT | DECOMPRESSION	1452
DECOMPRESSION | DECOMPRESSION	1453

DOUBLE CASEMENT BALCONY DOOR | ASSEMBLY DOUBLE CASEMENT PROFILE BALCONY DOOR	1456
DOUBLE CASEMENT BALCONY DOOR 2024 | ASSEMBLY DOUBLE CASEMENT PROFILE BALCONY DOOR	1460
DRAINAGE PIVOT DOOR XL | DRAINAGE	1463
DRAINAGE CR BALCONY DOOR 2024 | DRAINAGE VENT	1465
DRAINAGE CR INWARD OPENING | HIDDEN DRAINAGE VENT FLUSH DOOR	1467
DRAINAGE CR MAGNETUDE PANEL DOOR | DRAINAGE MAGNETUDE VENT	1471
DRAINAGE CR OUTWARD OPENING | HIDDEN DRAINAGE VENT FLUSH DOOR	1472
DRAINAGE CR PIVOT WINDOW | DRAINAGE PIVOT WINDOW	1474
DRAINAGE JIG BALCONY DOOR 2024 | DRAINAGE VENT	1476
DRAINAGE JIG PIVOT WINDOW | DRAINAGE PIVOT WINDOW	1477
DRAINAGE JIG WINDOW-DOOR | DRAINAGE VENT	1479
DRAINAGE MC INWARD OPENING | HIDDEN DRAINAGE VENT FLUSH DOOR	1483
DRAINAGE MC MAGNETUDE PANEL DOOR | DRAINAGE MAGNETUDE VENT	1485
DRAINAGE MC OUTWARD OPENING | HIDDEN DRAINAGE VENT FLUSH DOOR	1486
DRAINAGE MC PIVOT WINDOW | DRAINAGE PIVOT WINDOW	1488
DRAINAGE MFPT BALCONY DOOR 2024 | DRAINAGE VENT	1490
DRAINAGE MFPT PIVOT WINDOW | DRAINAGE PIVOT WINDOW	1491
GLUE JIG MAGNETUDE PANEL DOOR | GLUE INJECTION + CORNER CONNECTION 197.D600.00	1495
GLUE MC MAGNETUDE PANEL DOOR | GLUE INJECTION + CORNER CONNECTION 197.D600.00	1498
GLUE MFPT MAGNETUDE PANEL DOOR | GLUE INJECTION + CORNER CONNECTION 197.D600.00	1500
MAGNETUDE PANEL DOOR AUTOMATIC SEALING INWARD OPENING | MAGNETUDE PANEL DOOR INWARD OPENING WITH DOOR LATCH	1503
MAGNETUDE PANEL DOOR AUTOMATIC SEALING OUTWARD OPENING | MAGNETUDE PANEL DOOR OUTWARD OPENING WITH DOOR LATCH	1505
MAGNETUDE PANEL DOOR BRUSH INWARD OPENING | MAGNETUDE PANEL DOOR INWARD OPENING WITH BRUSH	1507
MAGNETUDE PANEL DOOR BRUSH OUTWARD OPENING | MAGNETUDE PANEL DOOR OUTWARD OPENING WITH BRUSH	1509
MAGNETUDE PANEL DOOR DOUBLE SIDED AUTOMATIC SEALING OUTWARD OPENING | MAGNETUDE PANEL DOOR DOUBLE SIDED OUTWARD OPENING WITH AUTOMATIC DRAUGHT EXCLUDER	1511
MAGNETUDE PANEL DOOR DOUBLE SIDED BRUSH INWARD OPENING | MAGNETUDE PANEL DOOR DOUBLE SIDED INWARD OPENING WITH DOUBLE WEATHER STRIP	1513
MAGNETUDE PANEL DOOR DOUBLE SIDED BRUSH INWARD OPENING | MAGNETUDE PANEL DOOR DOUBLE SIDED INWARD OPENING WITH AUTOMATIC DRAUGHT EXCLUDER	1517
MAGNETUDE PANEL DOOR DOUBLE SIDED BRUSH OUTWARD OPENING | MAGNETUDE PANEL DOOR DOUBLE SIDED OUTWARD OPENING WITH BRUSH	1519
MAGNETUDE PANEL DOOR DOUBLE SIDED WEATHER STRIP INWARD OPENING | MAGNETUDE PANEL DOOR DOUBLE SIDED OUTWARD OPENING WITH DOUBLE WEATHER STRIP	1521
MAGNETUDE PANEL DOOR WEATHER STRIP INWARD OPENING | MAGNETUDE PANEL DOOR INWARD OPENING WITH DOUBLE WEATHER STRIP	1523

MAGNETUDE PANEL DOOR WEATHER STRIP OUTWARD OPENING | MAGNETUDE PANEL DOOR OUTW. OPENING WITH DOUBLE WEATHER STRIP 1525

MILLING EURONUT BALCONY DOOR 2024 | OPENING EURONUT 1526

Hardware Info / Beslaginformatie / Informations de quincaillerie / Beschlag-informationen 1528

MILLING HANDLE PIVOT WNDOW HORIZONTAL | PIVOT WINDOW INVISIBLE - OPERATION PROFILES 1529

Production Steps / Productiestappen / Étapes de production / Verarbeitungs-Zeichnungen 1532

MILLING HINGE DR HAHN VL BAND AT | VL-BAND - DECISION MATRIX ARTICLES + MILLING 1533

MILLING HINGE MASTERLINE 8-Fu Pivot Door | MILLING FOR PIVOT HINGE 1543

MILLING MOTOR MONORAIL OUTSIDE GLAZING | MOTOR MILLING TOP PROFILE ACCESSORIES 1551

MILLING MOTOR ACCESSORIES PIVOT DOOR XL | CABLING VENT 1556

OVERVIEW END PIECES BALCONY DOOR 2024 | ASSEMBLY END PIECES 1558

OVERVIEW END PIECES BALCONY DOOR ADA 2024 | ASSEMBLY END PIECES - ADA 1560

SILL DETAIL | SEALING SILL/THRESHOLD 1561

OVERVIEW FIXATIONS | FIXINGS 1563

SILL INNER CORNER | SEALING SILL/THRESHOLD - INNER CORNER 135° 1582

PANEL DOOR AUTOMATIC SEALING OUTWARD OPENING | PANEL DOOR OUTWARD OPENING WITH DOOR LATCH 1583

SAWING CLAMP VENT | CLAMP BLOCKS SAW 095.B600.00 1585

T SCREW CR | T-CONNECTIONS 1586

T SCREW JIG PANEL DOOR | TRANSOM-MULLION - DOUBLE-SIDED PANEL DOOR 1587

T SCREW MC PANEL DOOR | TRANSOM-MULLION - DOUBLE-SIDED PANEL DOOR 1589

Max Dimensions / Maximale afmetingen / Dimensions maximales / Maximale Abmessungen 1591

MAXIMAL DIMENSIONS FIXED WINDOW | MAX. SIZES FIXED WINDOW 1592

MAXIMAL DIMENSIONS SOBINCO | MAX. ADMISSIBLE SIZES 1593

MAXIMAL DIMENSIONS SIEGENIA | MAX. ADMISSIBLE SIZES 1608

MAXIMAL DIMENSIONS ERRETI | MAX. ADMISSIBLE SIZES 1611

MAXIMAL DIMENSIONS WINDOW-DOOR | MAX. ADMISSIBLE SIZES 1612

MAXIMAL DIMENSIONS BALCONY DOOR SOBINCO | MAX. ADMISSIBLE SIZES 1616

MAXIMAL DIMENSIONS BALCONY DOOR SIEGENIA | MAX. ADMISSIBLE SIZES 1618

MAXIMAL DIMENSIONS FAPIM | MAX. ADMISSIBLE SIZES 1622

MAXIMAL DIMENSIONS DOOR | MAX. ADMISSIBLE SIZES 1624

MAXIMAL DIMENSIONS PIVOT DOOR | MAX. ADMISSIBLE SIZES 1629

MAXIMAL DIMENSIONS PIVOT DOOR XL | MAX. ADMISSIBLE SIZES 1630

MAXIMAL DIMENSIONS GLASS INTEGRATED BALLUSTRADE | MIN/MAX GLASS THICKNESS 1631

Hardware Info / Beslaginformatie / Informations de quincaillerie / Beschlag-informationen 1632

MAXIMAL DIMENSIONS PIVOT WINDOW SOBINCO | PIVOT WINDOW INVISIBLE - MAXIMUM DIMENSIONS 1633

Max Dimensions / Maximale afmetingen / Dimensions maximales / Maximale Abmessungen 1634

TABLE MOMENTS OF INERTIA | TABLE WITH MOMENTS OF INERTIA 1635

MAXIMAL DIMENSIONS SOBINCO | MAX. ADMISSIBLE SIZES 1637

MAXIMAL DIMENSIONS SIEGENIA | MAX. ADMISSIBLE SIZES 1639

Glazing Tables / Beglazingstabellen / Tableaux de vitrage / Verglasungstabellen 1641

GLAZING METHOD MASTERLINE 8 RC3 | GLAZING METHOD RC3 1642

GLAZING METHOD MASTERLINE 8 | GLAZING METHOD 1643

GLAZING TABLE MASTERLINE 8-Fu Re De | GLAZING TABLES 1646

GLAZING TABLE MASTERLINE 8-HV | GLAZING TABLE HIDDEN VENT - BALCONY DOOR 1658

GLAZING TABLE MASTERLINE 8-Fu Pivot Window | GLAZING TABLE 1659

GLAZING TABLE PIVOT DOOR XL | GLAZING TABLE 1661

GLAZING TABLE PANEL DOOR | GLAZING TABLE SPY WINDOW 1664

GLAZING METHOD PANIC DOOR | GLAZING METHOD RC3 - PANIC 1666

Processing Data
Verwerkingsvoorschriften
Traitement de préscriptions
Daten Verarbeiten

Reynaers Aluminium

VERWERKINGSVOORSCHRIFTEN

I. ALGEMEEN

Zie catalogus “1.Algemene informatie” (089.C01*.**)

II. VERWERKINGSVOORSCHRIFTEN MASTERLINE 8

II.1 CONSTRUCTIEVOORSCHRIFTEN

Om blijvend een perfect eindproduct te garanderen, dienen tijdens de verwerking bepaalde regels in acht genomen te worden.

II.1.1 Verspanende bewerkingen

Onder verspanende bewerkingen wordt verstaan: alle mechanische bewerkingen zoals zagen, frezen, boren, ponsen en knippen. Voor gelakte profielen is het essentieel dat de laklagen aan de randen niet loskomen tijdens deze bewerkingen. Het is daarom van groot belang voor de kwaliteit van de verbindingen dat:

- het verspanende gereedschap geschikt en voldoende scherp is.
- de machines goed afgesteld en afgeregeld zijn (bv. toerental).
- er regelmatig onderhoud en controle van het gereedschap uitgevoerd wordt conform de voorschriften van de machineleveranciers.
- het verspanende gereedschap correct en voldoende gesmeerd wordt:
  - smeerstick (art.nr. 086.9191.UN) voor zaagbladen
  - snijmiddel (art.nr. 086.9175.UN) voor ponsgereedschap
  - of de door de machineleveranciers voorgeschreven koel- en smeermiddelen;
- de correcte klemblokken worden gebruikt (zie montagetekeningen “*klemblokken*”).
- de aan- en afvoertafel vrij zijn van spanen en verontreinigingen.
- eventuele koeling gebeurt met chemisch neutrale producten die de oppervlaktebehandeling niet aantasten.

Het verdient aanbeveling om spanen die ontstaan tijdens het verspanen af te zuigen. Alle zaagsnedes die een verbinding vormen zoals: hoek- en T-verbindingen, dienen beschermd te worden met Reynaprotector (art.nr. 086.9207.SY + 086.9225.--). Andere zaagsnedes zoals: glaslatten, klemlijsten,... dienen beschermd te worden met Reynastick (art.nr. 086.9606.--), alsook freessnedes, boorgaten, ponsgaten,…

Voor het correct functioneren, het behalen van de performanties en de esthetiek van het eindproduct is het van groot belang dat de profielen binnen nauwe toleranties verzaagd worden.

Zaagtoleranties enkele ramen: Fb = A + 12mm (+0.5/-2.0mm)

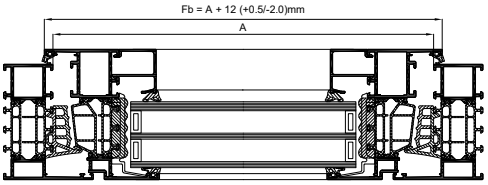

Zaagtoleranties dubbele ramen: $Fb_1 + Fb_2 = A + 5mm$ (+0.5/-2.0mm)

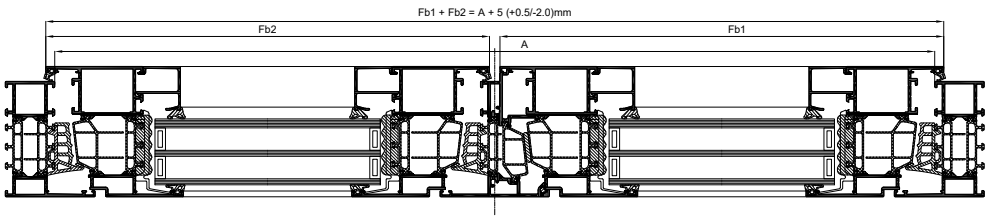

Zaagtoleranties enkele deuren: Fb = A – 12mm (+2.0/-2.0mm)

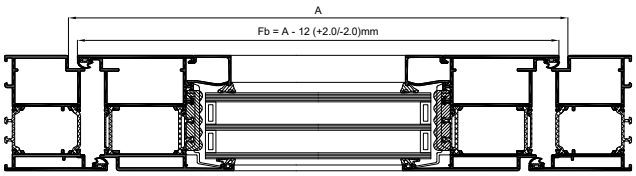

Zaagtoleranties dubbele deuren: Fb_1+Fb_2 = A – 18mm (+2.0/-2.0mm)

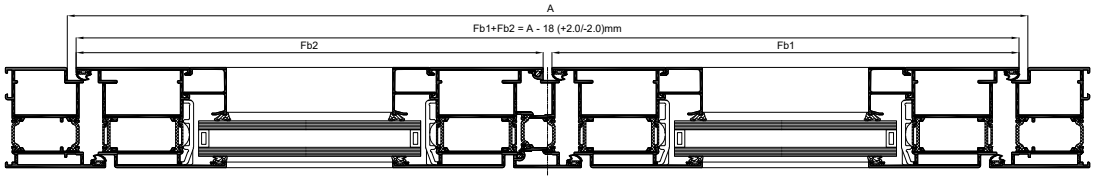

Indien er onenigheid zou bestaan over wat er onder acceptabele afwijkingen verstaan wordt kan men de richtlijnen van instanties als het Aluminium Center Belgium raadplegen.

1.1.1 Positie/klemming van de profielen tijdens het zagen:
De positie van de profielen op de zaagtafel tijdens het verzagen is zeer belangrijk en is de basis om perfecte verstekken te verkrijgen. Bij het inklemmen dient rekening gehouden te worden met de beweegrichting van het zaagblad ten opzichte van het profiel (zie schema's hieronder). We onderscheiden primaire (1) en secundaire (2) klemming. Op de primaire klemming wordt de grootste druk uitgeoefend. De noodzaak van de secundaire klemming is afhankelijk van de exacte vormgeving van het profiel.

De klemblokken moeten gebruikt worden:
- om te vermijden dat speling op de profielen de kwaliteit van het verstek zou beïnvloeden;
- om te vermijden dat de profielen zouden kantelen op de tafel.

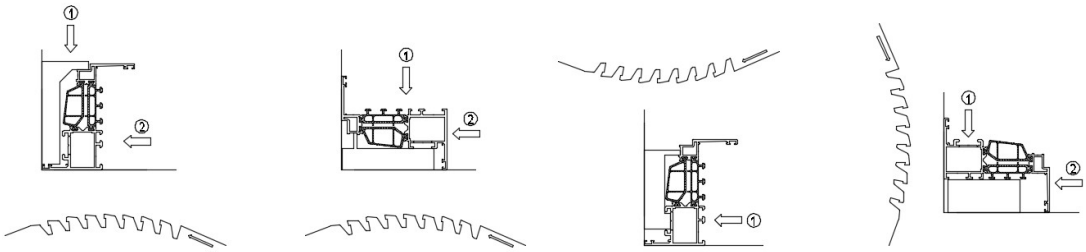

FOUTIEVE KLEMMING

FOUT:	De primaire klemming drukt voorbij het kantelpunt van het profiel waardoor deze scheef komt te staan.
GEVOLG:	Scheve zaagsnede: de buitenzijde is korter dan de binnenzijde.
RESULTAAT:	Na het verbinden van de hoeken is het verstek aan de binnenzijde dicht maar is er aan de buitenzijde een opening zichtbaar.

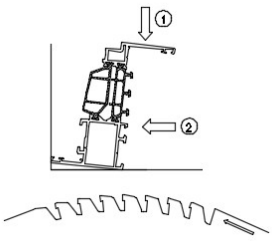

BELANGRIJK BIJ HET VERZAGEN
Als je “Sobinco Chrono Safe” met zichtbare scharnieren gebruikt voor een vleugelmaat welke kleiner is dan 600mm, moet je de aanliggende profielen t.o.v. de scharnierzijde 2 mm inkorten in vergelijking met de standaard catalogus waarden.

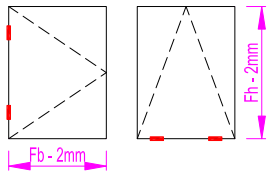

1.1.2. Ontwatering en uitsparingen voor het beslag

Stappen:
1. Aftekenen uitsparingen
2. Correct ponsen, boren of frezen
3. Beschermen van de bewerkte vlakken door:
   - ontbramen (indien noodzakelijk)
   - verwijderen van stof en zaagresten op de zaagsnede en in de profielkamer
   - ontvetten (Reynafinish 60 art.nr. 086.9210.-- of Reynaers safety clean 086.9231.--)
   - aanbrengen van Reynastick (art.nr. 086.9600.06) of Reynaers Anti-Corro (art.nr. 086.9606.--)

Aandachtspunten bij de ontwatering:
Eventueel binnendringend water moet vlot en gecontroleerd kunnen afgevoerd worden en de druk in de binnenkamers moet gelijk blijven aan die van de buitenlucht.
- Bij elk raam worden er ontwateringsopeningen voorzien met een maximale afstand tot de hoek van 250 mm .(voor specifieke ontwatering: zie montagetekeningen “*ontwatering*”):
  2 openingen tot raambreedte van 1000 mm
  3 openingen tot raambreedte van 1500 mm
  enz... opgaand per 500 mm.
- Steeds op het laagste punt van de glassponning afwateren
- De minimale oppervlakte van deze ontwateringsopeningen bedraagt 50 mm² per opening, hetzij een ronde opening van minimum 8 mm diameter, hetzij langwerpige openingen van minimaal 5 mm bij 15 mm.
- Ontwateringsgaten die aan de buitenzijde van het raam zichtbaar zijn, worden afgedekt met kunststofkapjes.
- Alle raamtypes moeten voorzien zijn van een ontwateringssyteem in de onderregels en/of de horizontale T-profielen
- Bij elk raam worden er ontluchtingsopeningen voorzien (zie montagetekening “*decompressie*”). De functie hiervan is de drukegalisatie rond de beglazing te waarborgen.
- Bij een vast raam wordt centraal bovenaan de buitenbeglazingsdichting 50mm onderbroken.
- Bij opengaande delen worden aan weerszijden ontluchtingsgaten geboord van 5 mm, lateraal in de buitenschaal.

II.1.2 Assemblage

Wij maken de volgende onderverdeling:

1. T-verbindingen;
2. Hoekverbindingen;
   - Persen
   - Schroeven
3. Dichtingen
4. Inbouw van het beslag

1.2.1 T-verbindingen

Stappen (zie montagetekening "*T-verbinder*"):

1. Correct zagen.
2. Uitfrezen T-profiel (hoogte 27mm)
3. Ponsen of boren van lijminjectie- en bevestigingsgaten
4. Beschermen van de zaagsnedes en bewerkte vlakken door:
   - ontbramen (indien noodzakelijk)
   - verwijderen van stof en zaagresten op de zaagsnede en in de profielkamers;
   - ontvetten (Reynafinish 60 art.nr. 086.9210.-- of Reynaers safety clean 086.9231.--)
   - aanbrengen van Reynaprotector (art.nr. 086.9207.SY + 086.9225.--) op de zaagsnedes/bevestigingsgaten en Reynastick (art.nr. 086.9606.--) op de zaag/freessnedes.
5. Afdichten van de zone onder T-profiel op het kaderprofiel. Dit dient volledig waterdicht uitgevoerd te worden. Indien er een middendichting geplaatst wordt moet de rubbergroef vrij gehouden worden van dichtingsmiddel.
6. Verbinding tot stand brengen: de T-verbinder voor de binnenschaal wordt gepositioneerd op centerlijn en vastgeschroefd totdat de profielwand van het aansluitende profiel doorboord is. Het T-profiel wordt hierover aangebracht en gefixeerd d.m.v. de excentrische schroef.
7. De verbinders voor de buitenschaal worden ingelegd en vastgedraaid. Hierbij dient de ene zijde tegengehouden te worden terwijl de andere zijde aangedraaid wordt.
8. Verbinders worden geborgd door een goedgekeurde dichtingslijm (Reynaseal Duo art.nr. 084.9080.--) te injecteren in de daarvoor bestemde gaten.
9. Overtollige resten van lijm en dichtingsmiddel dienen verwijderd te worden en de zichtvlakken gereinigd met een niet-agressief middel (Reynafinish 60 art.nr. 086.9210.-- of Reynaers safety clean 086.9231.--).

1.2.2 Hoekverbindingen

Voordat de hoekverbindingen tot stand worden gebracht dient gecontroleerd te worden dat alle verspanende bewerkingen benodigd voor de afwerking van het raam correct zijn uitgevoerd. Sommige van deze bewerkingen zijn achteraf niet meer aan te brengen.

1.2.2.1 Persen

Stappen (zie montagetekening "*hoekverbinding*"):

* optie A: lijminjectie na persen
** optie B: lijminjectie voor persen

1. Correct zagen.
2. Ponsen of boren van lijminjectiegaten aan beide uiteinden van de te verbinden profielen (zie montagetekening "*lijminjectie*")
3. Beschermen en afdichten van de zaagsnedes en bewerkte vlakken door:
   - ontbramen (indien noodzakelijk);
   - verwijderen van stof en zaagresten op de zaagsnede en in de profielkamer;
   - ontvetten (Reynafinish 60 art.nr. 086.9210.-- of Reynaers safety clean 086.9231.--)
   - aanbrengen van Reynaprotector (art.nr. 086.9207.SY + 086.9225.--) op zaag/freessnedes.
4. ** Verlijmen in profielkamer: aanbrengen van een goedgekeurde dichtingslijm (Reynaseal Duo art.nr. 084.9080.--)
5. Aanbrengen pershoeken en steunhoeken (zie montagetekening "*steunhoeken*")
6. Verbinding tot stand brengen en persen (zie montagetekening "*hoekenpers*")
7. * Lijminjectie ter hoogte van voorziene injectiegaten door middel van een goedgekeurde dichtingslijm (Reynaseal Duo art.nr. 084.9080.--). Wanneer de lijm aan via het gat in het aansluitende profiel naar buiten komt is de hoek volledig verlijmd.
8. Overtollige resten van lijm en dichtingsmiddel dienen verwijderd te worden en de zichtvlakken gereinigd met een niet-agressief middel(Reynafinish 60 art.nr. 086.9210.-- of Reynaers safety clean 086.9231.--).

1.2.2.2 Schroeven

Stappen (zie montagetekening "*hoekverbinding*"):

* optie A: lijminjectie na schroeven
** optie B: lijminjectie voor schroeven

1. Correct zagen.
2. Ponsen of boren van schroef- en lijminjectiegaten* aan beide uiteinden van de te verbinden profielen (zie montagetekening "*lijminjectie*")
3. Beschermen en afdichten van de zaagsnedes en bewerkte vlakken door:
   - ontbramen (indien noodzakelijk);
   - verwijderen van stof en zaagresten op de zaagsnede en in de profielkamer;
   - ontvetten (Reynafinish 60 art.nr. 086.9210.-- of Reynaers safety clean 086.9231.--);
   - aanbrengen van Reynaprotector (art.nr. 086.9207.SY + 086.9225.--) op de zaagsnedes en Reynastick (art.nr. 086.9606.--) op de freessnedes.
4. ** Verlijmen in profielkamer: aanbrengen van een goedgekeurde dichtingslijm (Reynaseal Duo art.nr. 084.9080.--)
5. Aanbrengen schroefhoek, nagelhoek en steunhoeken (zie montagetekening "*steunhoeken*")
6. Verbinding tot stand brengen: schroeven aandraaien en vervolgens (indien van toepassing) nagels inkloppen.
7. * Lijminjectie ter hoogte van voorziene injectiegaten door middel van een goedgekeurde dichtingslijm (Reynaseal Duo art.nr. 084.9080.--). Wanneer de lijm aan via het gat in het aansluitende profiel naar buiten komt is de hoek volledig verlijmd.
8. Overtollige resten van lijm en dichtingsmiddel dienen verwijderd te worden en de zichtvlakken gereinigd met een niet-agressief middel (Reynafinish 60 art.nr. 086.9210.-- of Reynaers safety clean 086.9231.--).

1.2.3 Dichtingen

1.2.3.1 Het aanbrengen van de middendichting (EPDM)

Stappen: (zie montagetekening "*middendichting*")
1. Correct versnijden: het versnijden van de middendichting dient met een snijmal (art.nr. 097.0217.00) te gebeuren.
2. Benodigde overlengte (ca 10 mm per meter) dient voorzien te worden.
3. Aanbrengen dichting: de dichtingen worden aangebracht in de daarvoor voorziene groeven van de profielen. De overlengte wordt lichtjes opgestuikt om krimp op te vangen. Het aanbrengen kan vereenvoudigd worden met behulp van siliconenspray (art.nr. 086.9551.--).
4. Verlijmen (afdichten): de snedes dienen ontvet te worden met Reynears Safety Clean (art.nr. 086.9231.--) en Reynaers primer seal & bond special (086.9232.--) en de verstekken dienen verlijmd te worden met vulkaniseerlijm Reynafix (art.nr. 084.9108.--). Doordat de verbinding elastisch blijft, sluit de dichting ook in de hoeken perfect aan.

1.2.3.2 Het aanbrengen van de middendichting (TPE)

Stappen: (zie montagetekening "*middendichting*")
1. Correct versnijden: het versnijden van de middendichting dient met een snijmal (art.nr. 097.0217.00) te gebeuren.
2. Benodigde overlengte (ca 10 mm per meter) dient voorzien te worden.
3. Aanbrengen dichting: de dichtingen worden aangebracht in de daarvoor voorziene groeven van de profielen. De overlengte wordt lichtjes opgestuikt om krimp op te vangen.
4. Verlijmen (afdichten): de snedes dienen ontvet te worden met Reynears Safety Clean (art.nr. 086.9231.--) en Reynaers primer seal & bond special (086.9232.--) en de verstekken dienen verlijmd te worden met daarvoor geschikte secondenlijm (art.nr. 084.9107.--). Doordat de verbinding elastisch blijft, sluit de dichting ook in de hoeken perfect aan.

Opmerking: het is ook mogelijk in TPE om kaders te lassen met behulp van een lasmachine (art.nr. 095.N200.00).

1.2.3.3 Het aanbrengen van de akoestische dichting

Stappen: (zie montagetekening "*dichting*")
1. Correct versnijden: het versnijden van de akoestische dichting dient met een dichtingenschaar (art.nr. 090.0121.00) te gebeuren. Deze dichting dient recht versneden te worden en door te lopen in de hoeken (kleine insnijding in de hoeken zorgen voor een vlotte buiging). Benodigde overlengte (ca 10 mm per meter) dient voorzien te worden.
2. Aanbrengen dichting: de dichtingen worden aangebracht in de daarvoor voorziene groeven van de profielen. De overlengte wordt lichtjes opgestuikt om krimp op te vangen. Het aanbrengen kan vereenvoudigd worden met behulp van siliconenspray (art.nr. 086.9551.--).
3. Verlijmen (afdichten): de snedes dienen ontvet te worden met Reynears Safety Clean (art.nr. 086.9231.--) en Reynaers primer seal & bond special (086.9232.--) en de aansluitingen dienen verlijmd te worden met vulkaniseerlijm Reynafix (art.nr. 084.9108.--) of daarvoor geschikte secondenlijm (art.nr. 084.9107.--). Doordat de verbinding elastisch blijft, sluit de dichting ook in de hoeken perfect aan.
4. Ter hoogte van zichtbare scharnieren dient de dichting uitgesneden te worden.

1.2.3.4 Het aanbrengen van de beglazingsdichting

Stappen: (zie montagetekening "*dichting*")

1. Correct versnijden: het versnijden van de beglazingsdichting dient met een dichtingenschaar (art.nr. 090.0121.00) te gebeuren. De dichting dient recht versneden te worden.
2. Aanbrengen dichting: de dichtingen worden aangebracht in de daarvoor voorziene groeven van de profielen. De verticalen dienen stuitend aan te sluiten op de horizontalen. De overlengte wordt lichtjes opgestuikt om krimp op te vangen. Het aanbrengen kan vereenvoudigd worden met behulp van siliconenspray (art.nr. 086.9551.--).
3. Verlijmen (afdichten): de snedes dienen ontvet te worden met Reynears Safety Clean (art.nr. 086.9231.--) en Reynaers primer seal & bond special (086.9232.--) en de aansluitingen dienen verlijmd te worden met vulkaniseerlijm Reynafix (art.nr. 084.9108.--) of daarvoor geschikte secondenlijm (art.nr. 084.9107.--). Doordat de verbinding elastisch blijft, sluit de dichting ook in de hoeken perfect aan.

1.2.4 Inbouw van het beslag

Keuze van bevestigingspunten, aantal sluitpunten, aantal scharnieren, max. vleugelgewicht, max. vleugelafmetingen, toegepast vleugelprofiel e.a. dient te gebeuren volgens de richtlijnen in systeem- en beslagcatalogus. Glijdende en bewegende delen zijn van neutraal vet te voorzien.

II.2 MONTAGEVOORSCHRIFTEN

II.2.1 Stockage

De stockage van onafgewerkte of afgewerkte elementen dient steeds in een droge, vorstvrije ruimte te gebeuren

II.2.2 Inbouw in de ruwbouw

De constructie en de verankering dienen het gewicht van de elementen te kunnen dragen. Gelieve bij twijfel een constructieingenieur te raadplegen.

De bevestiging aan de ruwbouw gebeurt ofwel rechtstreeks door de sponning van de profielen met roestvrij stalen afstandsschroeven, ofwel met behulp van bevestigingsankers (zie catalogus “Reynaconnect”).
- De bevestigingen mogen niet minder dan 40 mm van de rand van de ruwbouw worden aangebracht.
- De verankering mag geenszins het draagvermogen van de aangrenzende bouwonderdelen beïnvloeden.
- Alle verankeringen, voor zover niet uit aluminium of roestvrij staal, dienen afdoende tegen corrosie te zijn beschermd en mogen zelf ook geen aantasting van het aluminium veroorzaken.
- Bij de plaatsing van de ramen worden er voldoende bevestigingen voorzien:

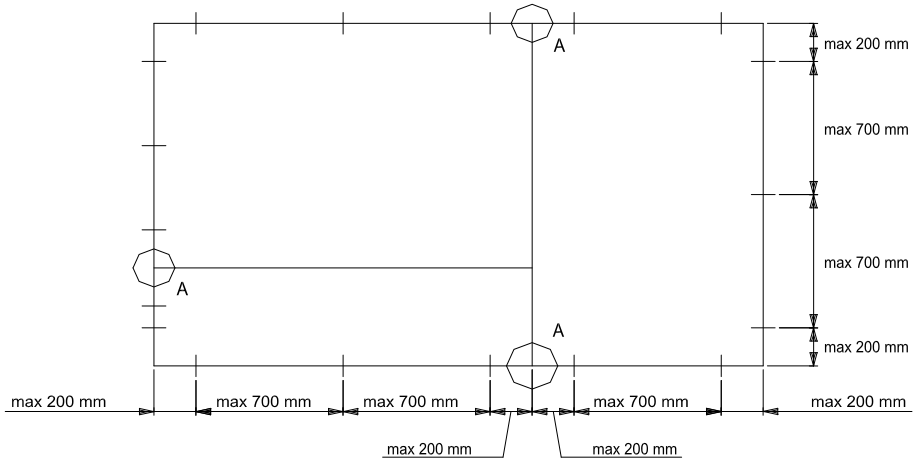

Er dienen per zijde minimaal 2 bevestigingen aangebracht te worden met een maximale afstand tot de hoek van 200 mm.
- De afstand van de bevestigingen onderling bedraagt maximaal 700 mm.
- Op de plaatsen waar een tussenregel of tussenstijl op de zijstijl, boven- of onderregel aansluit moet de verankering op maximum 200 mm naast de stijl- of regelaansluiting worden aangebracht (A). Hierdoor wordt bereikt dat de tussenregel en de tussenstijl een lengteverandering (ten gevolge van temperatuurverandering) zonder schade kunnen ondergaan.
- Aan te raden is de bevestigingen te positioneren ter hoogte van ieder scharnier- en sluitpunt.

Opmerking:
De verankeringen dienen dusdanig aangebracht te worden dat ze eventuele zettingen van het raam kunnen opvangen.

Bij montage dient men te controleren of het beslag soepel en zonder hapering te bedienen is.

II.3 BEGLAZING

Al onze systemen zijn ontworpen voor beglazing met EPDM-rubbers of neutrale siliconenkit. Bij siliconenbeglazing dient een rugvulling aangebracht te worden om een correcte opening tussen het glaspaneel en het aluminiumkader te creëren. Wij raden u aan onze speciaal ontwikkelde beglazingsrubbers te gebruiken. De beglazing hiermee zal vlotter en betrouwbaar verlopen, duurzamer zijn in de tijd, en beschadigde glaspanelen zullen gemakkelijker vervangen kunnen worden.

Bij de beglazing dient rekening te worden gehouden met volgende punten:
- Het te plaatsen glas voldoet aan lokaal geldende normen.
- De beglazingsdichting dient opgestuikt en afgedicht te zijn om te voorkomen dat er ten gevolge van krimp openingen ontstaan in de hoeken.
- Elementen voorzien van coatex oppervlaktebehandeling dienen met EPDM-rubbers beglaasd te worden. Siliconenkit heeft geen goede hechting op deze ondergrond.
- De glassponning dient ontwaterd te zijn. Dit is ook noodzakelijk bij beglazing met siliconenkit(zie montagetekening “ontwatering”).
- Indien de afstandhouder van het glas niet volledig afgedekt wordt dient de randafdichting UV-bestendig te zijn.
- Geen enkel glaspaneel mag rechtstreeks in contact komen met aluminium zonder tussenplaatsing van beglazingsblokjes of een rubberdichting.
- Glassteunen worden toegepast om de bodem van de sponning te effenen. Hierop worden beglazingsblokjes geplaatst. Deze dienen voldoende sterk te zijn om het gewicht van het glas te dragen en iedere afzonderlijke glasplaat te ondersteunen.
- De glassteunen die zich aan de onderzijde van het glaspaneel bevinden, dienen afgedicht te worden (zie tekening hieronder)

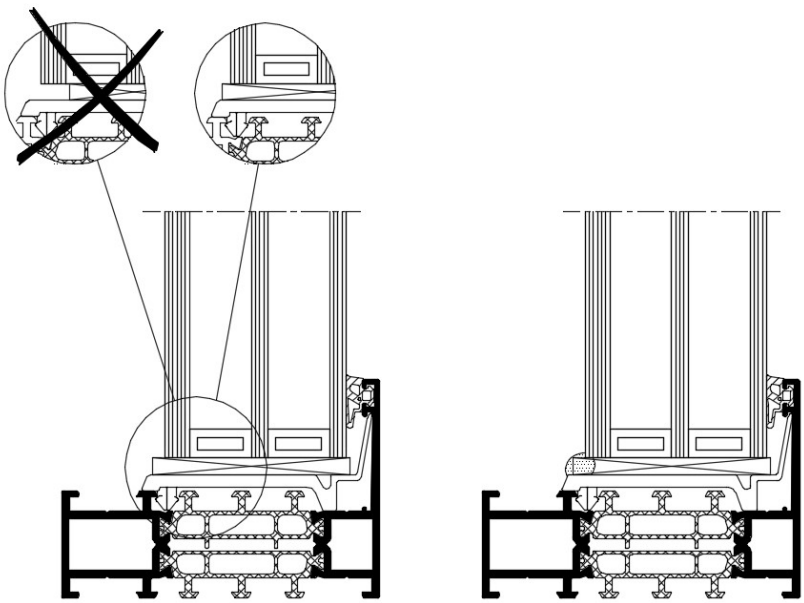

Montage van de beglazing

Bij de montage van de beglazing worden beglazingsblokjes geplaatst tussen glas en profiel. We onderscheiden 2 types:

Steunblokjes 

Stelblokjes 

C1: steunblokjes
Deze steunblokjes brengen het gewicht van het glas over op de vleugel of het raamkozijn. Correcte plaatsing is van belang om een goede werking van het raam te garanderen. Ze dienen geplaatst te worden met behulp van specifiek daarvoor bedoeld gereedschap.

C2: stelblokjes
Deze blokjes verzekeren de positie van het glas in de sponning. Ze worden aangebracht zonder te forceren.

De volgende schema's geven de vereiste positie van de beglazingsblokjes in de verschillende raamtypes weer.

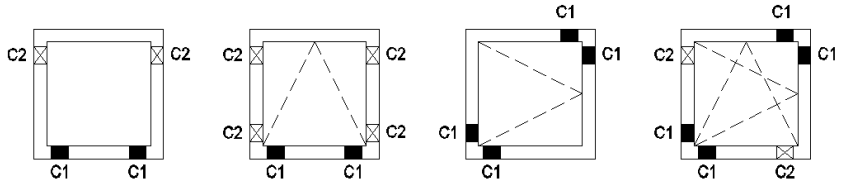

vast raam | valraam | draairaam | draaikipraam

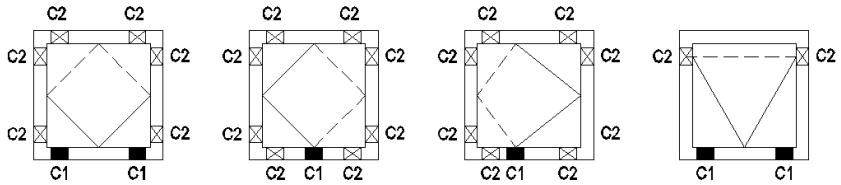

tuimelraam | taatsraam | excentrisch taatsraam | uitzetzakraam

Bij een vast raam brengt men de ondersteuningen aan in de hoeken van de onderregel om te voorkomen dat deze gaat doorbuigen onder het gewicht van het glas.

Bij draai- en draaikipramen wordt het glas diagonaal opgespied van de scharnieronderhoek naar de tegenoverliggende hoek bovenaan. Hiermee wordt het gewicht van het glas op de juiste wijze afgedragen zodat vervorming van de raamvleugel wordt voorkomen. Bij het opspieën dient men te controleren of de raamvleugel gecentreerd gepositioneerd is ten opzichte van het kader. Nadat de raamvleugel correct opgespied is kunnen de stelblokjes (indien van toepassing) bijgeplaatst worden alvorens de glaslatten aangebracht worden.

Beglazing balustrade

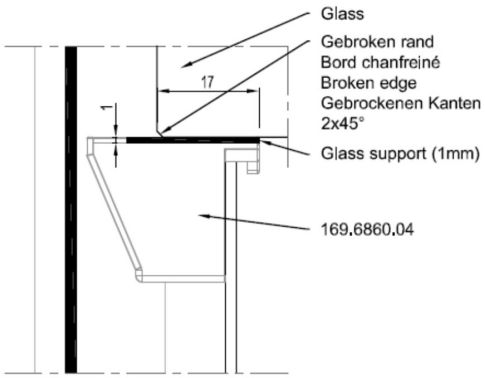

II.4 BIJKOMENDE VOORSCHRIFTEN BI-METAAL EFFECT DEUREN

Onze deurprofielen zijn voorzien van geperforeerde isolatiestrips die het kromtrekken – en daarmee verlies van functionaliteit – onder invloed van een groot temperatuursverschil tussen binnen en buiten voor een groot deel beperken. Desondanks zal dit bij thermisch onderbroken metalen profielen nooit geheel vermeden kunnen worden. Daarom adviseren wij onder bepaalde condities bijkomende bewerkingen uit te voeren om het fenomeen tot het minimum te beperken.

De te nemen actie is afhankelijk van de kleur, de vleugelhoogte en de positie van de deur ten opzichte van de zon. We classificeren RAL kleuren volgens tabel 1. Voor deuren die niet aan zonlicht blootgesteld zullen worden maar waar toch grote temperatuursverschillen te verwachten zijn, is de kleur niet van invloed en kan klasse 14 gehanteerd worden. Tabel 2 koppelt de acties aan kleurklasse en vleugelhoogte. In tabel 3 vindt men de verklaring van de te nemen acties.

Voor MasterLine 8: Om eventueel optreden luchtverlies ten gevolge van het kromtrekken van deur, kan dichting 080.9095.04 worden toegepast (Zie passiefdeur).

1	5004 8022 9005
2	3004 3005 3007 4007 5003 5008 5011 5013 5020 5022 6005 6007 6008 6009 6012 6022 7021 8014 8016 8017 8019 9004 9011 9017
3	3003 3009 3011 5000 5001 5002 5010 6004 6006 6014 6015 6020 7016 7022 7024 7026 8011 8012 8015 8028
4	3000 3001 3002 3013 3027 4002 4006 5005 5009 5017 5019 6002 6003 6016 6026 6028 7009 7010 7011 7013 7015 7043 8002 8003 8007 8008 8024
5	2002 3016 3020 3031 4008 5007 5021 5023 6000 6001 6010 6025 6029 7006 7008 7012 7031 7039 8004 8025
6	2001 3017 3018 4001 4005 4010 5014 5015 6011 6013 6017 6024 6032 7003 7005 8000 8001 8023
7	1027 2004 2009 2010 2012 3022 4003 5012 5018 6018 6033 7000 7002 7023 7033 7034 7037 7046
8	1005 1011 1019 1020 1024 2000 2008 2011 3012 3014 4009 5024 6021 7001 7030 7036 7042 7045
9	1006 1007 2003 6034 7004 7040
10	1001 1002 1012 1028 1033 1034 3015 6027 7032 7038 7044
11	1000 1003 1017 1021 1023 6019 7035
12	1014 1018 7047 9018
13	1013 1015 1016
14	9003 9010 9016

Tabel 1: classificatie van RAL kleuren

Kleur-klasse	Vleugelhoogte (mm)									
	2100	2200	2300	2400	2500	2600	2700	2800	2900	3000
1	2	3	3	3	3	3	4	4	4	4
2	2	3	3	3	3	3	3	4	4	4
3	2	2	3	3	3	3	3	4	4	4
4	2	2	3	3	3	3	3	3	4	4
5	2	2	3	3	3	3	3	3	4	4
6	1	2	2	3	3	3	3	3	3	4
7	1	2	2	3	3	3	3	3	3	3
8	1	1	2	2	3	3	3	3	3	3
9	1	1	2	2	2	3	3	3	3	3
10	1	1	1	2	2	3	3	3	3	3
11	1	1	1	2	2	2	3	3	3	3
12	1	1	1	1	2	2	2	3	3	3
13	1	1	1	1	1	2	2	2	3	3
14	1	1	1	1	1	1	2	2	2	3

Tabel 2: te nemen acties in functie van kleurklasse en vleugelhoogte

1	Geen problemen te verwachten
2	Aanbeveling tot vermijden van cylinder bediende sloten **OF** Insnijden van de hoeken **EN/OF** Het gebruik van een continue deurtrekker (408.7555.XX / 408.7556.XX).
3	Aanbeveling tot vermijden van cylinder bediende sloten **EN** Insnijden van de hoeken **EN** Het gebruik van een continue deurtrekker (408.7555.XX / 408.7556.XX).
4	Wij adviseren directe blootstelling aan zonlicht te vermijden. Wij hebben zonwerende oplossingen in ons gamma (BS 30).

Tabel 3: verklaring van te nemen acties.

Insnijden van de hoeken:

Snijd de isolatiestrips in de hoeken aan de slotzijde. Op deze manier heeft de slotzijde meer flexibiliteit wat toelaat dat de binnen- en buitenschaal onafhankelijk van elkaar kunnen bewegen. De scharnierzijde (welke het gewicht van het glas draagt) kan intact gelaten worden.

X = 300 mm
Y = 500 mm

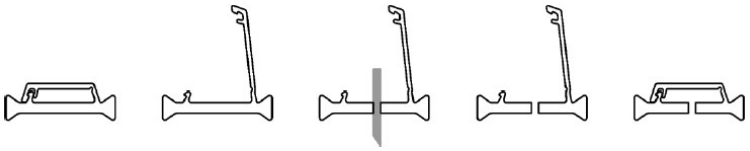

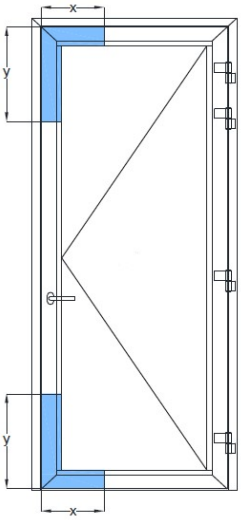

Het insnijden van de isolatiestrips kan op de volgende wijze gebeuren:

1. Profielen verzagen
2. Open de afdekkap van de strip

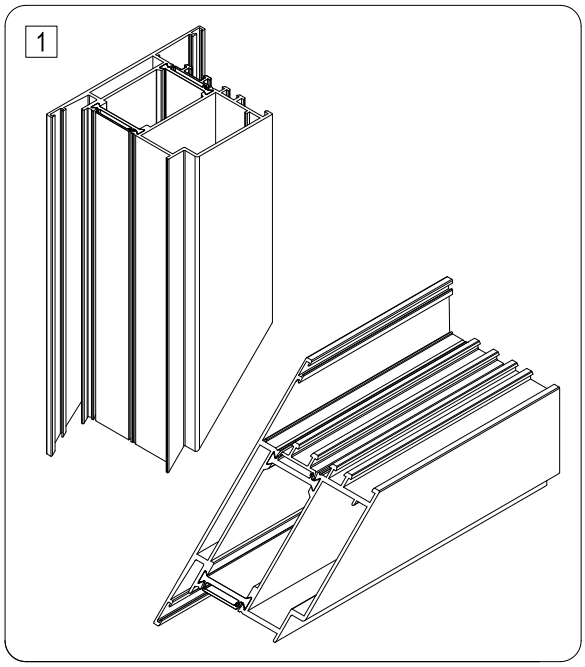

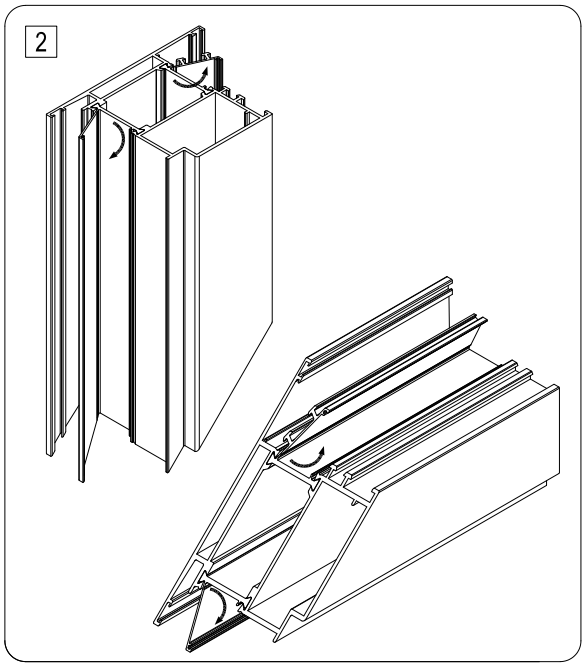

3. Snijd het overige gedeelte van de strip in. Aangezien de strip al geperforeerd is kan dit gemakkelijk gedaan worden met een mes of een klein zaagblad.
4. Sluit de afdekkap. De aanpassing is aan het zicht onttrokken.

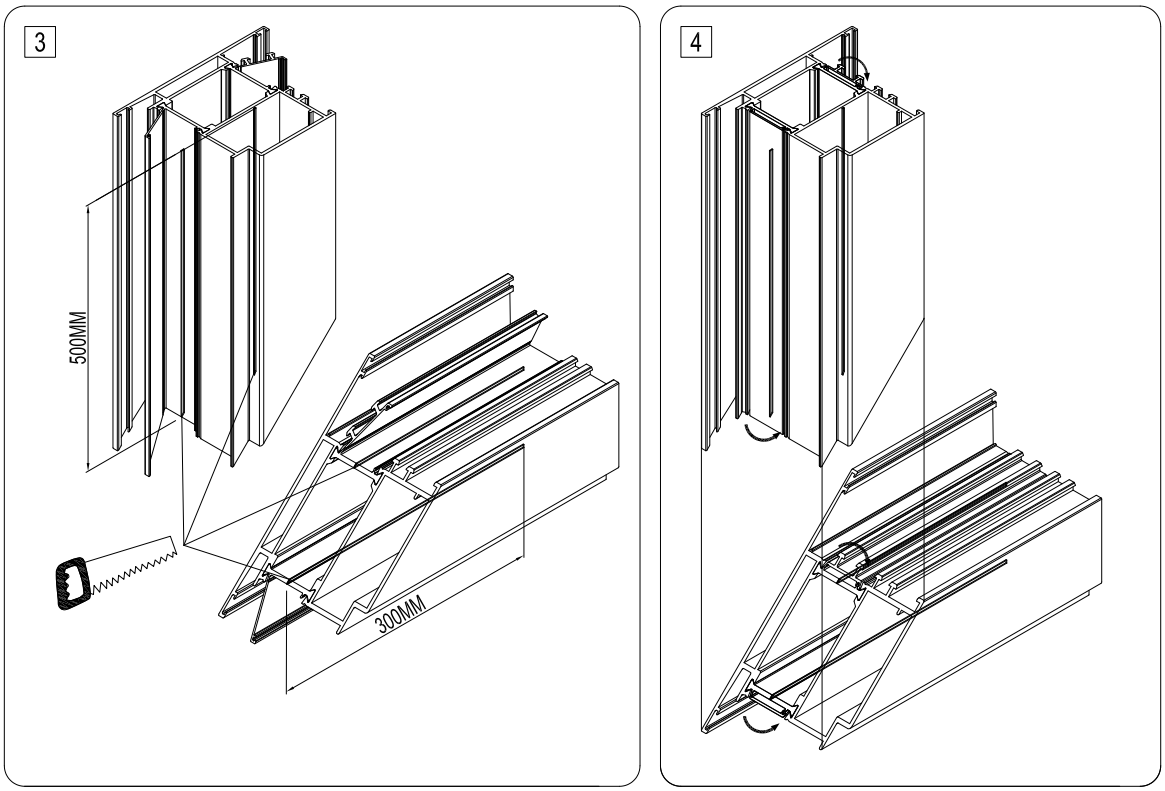

RECOMMANDATIONS DE MISE EN OEUVRE

I. GENERAL

Voir catalogue “1. Informations générales” (089.C01*.**)

II. RECOMMANDATIONS DE MISE EN OEUVRE MASTERLINE 8

II.1 RECOMMANDATIONS DE FABRICATION

Afin de garantir un produit final parfait, certaines règles doivent être suivies pendant la fabrication.

II.1.1 Opérations d’usinage.

Par opérations d’usinage on entend: toutes les opérations mécaniques comme le tronçonnage, le fraisage, le forage, le poinçonnage et la découpe. Il est essentiel que la couche de laque des profilés laqués ne se détache pas sur les bords pendant ces opérations. Il est donc très important pour la qualité des assemblages que:

- les outils d’usinage soient adaptés et suffisamment aiguisés;
- les machines soient bien réglées et ajustées (p.ex. régime).
- l'outillage soit régulièrement entretenu et contrôlé conformément aux préconisations des fournisseurs de machines.
- les outils d’usinage soient correctement et suffisamment graissés:
  - bâton lubrifiant (art.n° 086.9191.UN) pour lames de scie;
  - huile de coupe (art.n° 086.9175.UN) pour outils de poinçonnage
  - ou les réfrigérants et lubrifiants prescrits par les fournisseurs des machines;
- les mors de serrage corrects soient utilisés (voir détails de fabrication « blocs de serrage »).
- la table d’aménée ou d’évacuation soit exempte de copeaux et de souillures;
- le refroidissement éventuel se fasse à l’aide de produits chimiquement neutres qui ne corrodent pas le traitement de surface.

Il est recommandé d'aspirer les copeaux produits par les opérations d'usinage. Toutes les coupes des profilés qui forment une jonction comme les équerres d’assemblage angulaires et les jonctions en T doivent être protégées à l’aide de Reynaprotector (art. n° 086.9207.SY + 086.9225.--). Toutes les autres coupes (comme parcloses, fixations...) doivent être protégées à l’aide de Reynastick (art.n°086.9600.06) ainsi que les fraisages, trous d’alésage, perforations...

Dans un souci de bon fonctionnement, de performance et d'esthétique du produit fini, il est très important de tronçonner les profilés dans des tolérances étroites.

Tolérances de coupe fenêtres: Fb = A + 12mm (+0.5/-2.0mm)

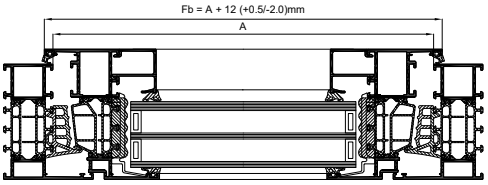

Tolérances de coupe fenêtres double: $Fb_1 + Fb_2 = A + 5mm$ (+0.5/-2.0mm)

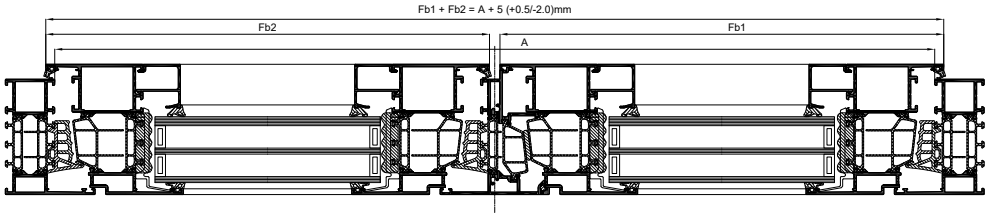

Tolérances de coupe portes: Fb = A – 12mm (+2.0/-2.0mm)

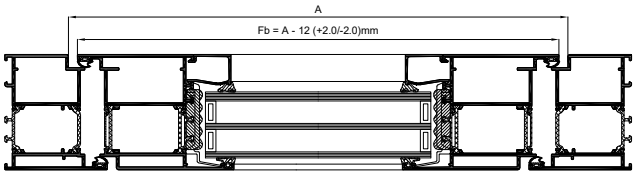

Tolérances de coupe portes double: $Fb_1+Fb_2 = A – 18mm$ (+2.0/-2.0mm)

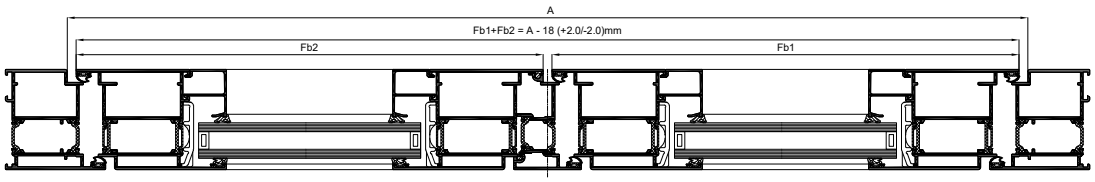

En cas d'incertitude quant à ce qu'il faut entendre par tolérances acceptables, on consultera les directives d'organismes tels que Aluminium Center Belgium.

1.1.1. Position/serrage des profilés pendant le tronçonnage:

La position des profilés sur la table de sciage pendant le tronçonnage est très importante pour obtenir des onglets parfaits. Le serrage doit tenir compte du sens du mouvement de la scie par rapport au profilé (voir le schéma ci-dessous). Nous distinguons le serrage primaire (1) et le serrage secondaire (2). Le serrage primaire correspond à la plus forte pression. Quant à la nécessité d'un serrage secondaire, elle dépend de la forme exacte du profilé.

Les mors de serrage doivent être utilisés:
- pour éviter que les tolérances sur les profilés influencent la qualité de l'onglet;
- pour éviter que les profilés ne basculent sur la table.

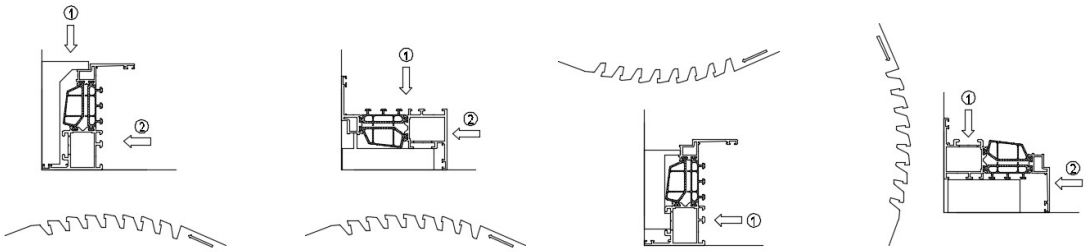

MAUVAIS SERRAGE

DÉFAUT : Le serrage primaire appuie au-delà du point de basculement du profilé, qui se retrouve de biais.
CONSÉQUENCE : Tronçonnage en biais : le côté extérieur est plus court que le côté intérieur.
RÉSULTAT : Après sertissage, l'assemblage sur la face intérieure est fermé, tandis qu'à l'extérieur, l'onglet s'est ouvert.

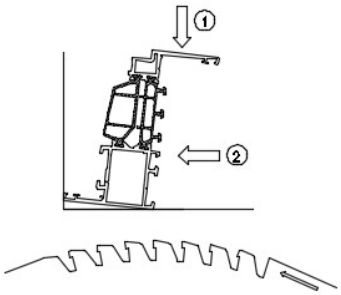

IMPORTANT LORS DU SCIAGE

Si vous utilisez "Sobinco Chrono Safe" avec des charnières visibles pour une dimension d'ouvrant inférieur à 600mm, vous devez raccourcir les profiles adjacentes par rapport au côté de la charnière de 2 mm, par rapport aux valeurs du catalogue normal.

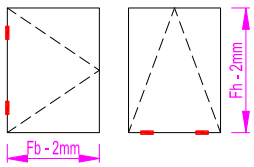

1.1.2. Drainage et découpes pour les accessoires

Etapes:
1. Marquer les découpes.
2. Poinçonnage, forage ou fraisage correct.
3. Protection des surfaces traitées par:
   - ébavurage (si nécessaire);
   - enlèvement des poussières et des copeaux sur les scies et dans la chambre du profilé.
   - dégraissage (Reynafinish 60 art.nr. 086.9210.-- ou Reynaers safety clean 086.9231.--);
   - application de Reynastick (art.nr. 086.9600.06) ou Reynaers Anti-Corro (art.nr. 086.9606.--)

Lors du drainage, il faut prêter attention aux points suivants:

Les eaux d'infiltration éventuelles doivent être évacués de façon rapide et contrôlée vers l'extérieur et il faut maintenir la chambre de décompression à la pression atmosphérique.

- Pour chaque fenêtre, des ouvertures de drainage sont prévues à une distance maximale de l'angle de 250 mm (en cas de drainage spécifique: voir détails de fabrication '*drainage*')
  ouvertures jusqu'à une largeur de fenêtre 1000 mm
  ouvertures jusqu'à une largeur de fenêtre 1500 mm
  etc... une ouverture en plus par 500 mm supplémentaires en largeur.
- Il faut toujours drainer au niveau du point le plus bas de la feuillure de vitrage.
- La surface minimale de ces ouvertures est de 50 mm² par ouverture, soit sous forme d'une ouverture ronde avec un diamètre minimal de 8 mm, soit sous forme d'une ouverture ovale de 5 mm x 15 mm au minimum.
- Les ouvertures de drainage qui sont visibles de l'extérieur de la fenêtre doivent recevoir des capuchons en matière synthétique.
- Les fenêtres, quel que soit leur type, doivent obligatoirement être drainées au niveau des traverses basses et intermédiaires..
- Chaque fenêtre doit être prévue de trous d'aération (voir détails de fabrication '*decompression*'). Sa fonction est de garantir l'égalisation de la pression autour du vitrage.
- En cas d'une fenêtre fixe le joint de vitrage extérieur est interrompu en haut sur une longueur de 50mm.
- Sur le haut du côté de l'ouvrant, on fore toujours au moins 1 ouverture de 5 mm de diamètre au minimum.
- Dans le cas d'une fenêtre fixe, le joint de vitrage extérieur est interrompu en haut sur une longueur de 50mm.
- Sur les parties ouvrantes, on fore des deux côtés des trous de purge d'air de 5 mm, latéralement dans la coque extérieure.

II.1.2 Assemblage

Nous distinguons les opérations suivantes:
2. Assemblages en T ;
3. Raccords d'angle ;
   - À sertir
   - À visser
4. Joints
5. Montage des accessoires

1.2.1 Assemblages en T

Étapes (voir détails de fabrication *« assemblage en T »*) :
1. Tronçonner correctement.
2. Fraiser le profilé en T (hauteur 27mm)
3. Poinçonner ou forer les trous d'injection de colle et de fixation
4. Protection des coupes et des surfaces traitées par :
   - ébavurage (si nécessaire)
   - enlèvement des poussières et des copeaux sur les sciages et dans la chambre du profilé ;
   - dégraissage (Reynafinish 60 art.nr. 086.9210.-- ou Reynaers safety clean 086.9231.--)
   - application de Reynaprotector (art.n° 086.9207.SY + 086.9225.--) sur les sciages/trous de fixation et de Reynastick (art. n° 086.9606.--) sur les sciages/fraisages.
5. Étanchement de la zone sous la traverse sur le profil et dormant. L'étanchéité à l'eau doit être parfaite. Si un joint central est appliqué, la rainure du caoutchouc doit être exempte de produit de joint.
6. Raccorder : le raccord en T de la coque intérieure se positionne sur la ligne centrale. On le visse ensuite jusqu'à ce que la paroi du profilé adjacent soit percée. La traverse est posée par-dessus et fixée avec la vis excentrique.
7. Les raccords de la coque extérieure sont insérés et fixés. Il faut pour cela maintenir un côté tandis que l'on tourne l'autre côté.
8. Les raccords sont protégés par une colle d'étanchéité approuvée (Reynaseal Duo art. n° 084.9080.--) que l'on injecte dans les trous prévus à cet effet.
9. Les résidus de colle et de joint doivent être éliminés. On nettoiera aussi les surfaces visibles avec un produit non agressif (Reynafinish 60 art.nr. 086.9210.-- ou Reynaers safety clean 086.9231.--).

1.2.2 Raccords d'angle

Avant de faire les raccords d'angle, il faut vérifier que tous les opérations d'usinage nécessaires à l'assemblage de la porte ou de la fenêtre sont bien faites. Certaines opérations ne sont pas possibles à faire après.

1.2.2.1 À sertir

Étapes (voir détails de fabrication *« raccord d'angle »*) :
* option A : injection de colle après sertissage
** option B : injection de colle avant sertissage

1. Tronçonner correctement.
2. Poinçonner ou forer des trous pour l'injection de colle aux deux extrémités des profilés à relier (voir détails de fabrication *« injection de colle »*)
3. Protection et étanchement des coupes et des surfaces traitées par :
   - ébavurage (si nécessaire) ;
   - enlèvement des poussières et des copeaux sur les sciages et dans la chambre du profilé ;
   - dégraissage (Reynafinish 60 art.nr. 086.9210.-- ou Reynaers safety clean 086.9231.--)
   - application de Reynaprotector (art. n° 086.9207.SY + 086.9225.--) sur les sciages/fraisages.
4. ** Encollage dans la chambre du profilé : application d'une colle d'étanchéité approuvée (Reynaseal Duo art. n° 084.9080.--)
5. Poser les équerres de sertissage et de soutien (voir détails de fabrication « *équerres de soutien* »)
6. Raccorder et sertir (voir détails de fabrication « *équerres à sertir* »)
7. * Injection de colle d'étanchéité approuvée dans les trous prévus à cet effet (Reynaseal Duo art. n° 084.9080.--). Lorsque la colle injectée dans le trou ressort par le profilé adjacent, le raccord est entièrement encollé.
8. Les résidus de colle et de joint doivent être éliminés. On nettoiera aussi les surfaces visibles avec un produit non agressif (Reynafinish 60 art.nr. 086.9210.-- ou Reynaers safety clean 086.9231.--).

1.2.2.2 À visser

Étapes (voir détails de fabrication *« raccord d'angle »*) : * option A : injection de colle après vissage
** option B : injection de colle avant vissage

1. Tronçonner correctement.
2. Poinçonner ou forer les trous de vis et d'injection de colle* aux deux extrémités des profilés à relier (voir détails de fabrication « *injection de colle* »)
3. Protection et étanchement des coupes et des surfaces traitées par :
   - ébavurage (si nécessaire) ;
   - enlèvement des poussières et des copeaux sur les sciages et dans la chambre du profilé ;
   - dégraissage (Reynafinish 60 art.nr. 086.9210.-- ou Reynaers safety clean 086.9231.--);
   - application de Reynaprotector (art. n° 086.9207.SY + 086.9225.--) sur les sciages et de Reynastick (art. n° 086.9606.--) sur les fraisages.
4. ** Encollage dans la chambre du profilé : application d'une colle d'étanchéité approuvée (Reynaseal Duo art. n° 084.9080.--)
5. Poser l'équerre à visser, l'équerre à clouer et les équerres de soutien (voir détails de fabrication *« équerres de soutien »*)
6. Raccorder : serrer les vis puis (le cas échéant) enfoncer les clous.
7. * Injection de colle d'étanchéité approuvée dans les trous prévus à cet effet (Reynaseal Duo art. N° 084.9080.--). Lorsque la colle injectée dans le trou ressort par le profilé adjacent, le raccord est entièrement encollé.
8. Les résidus de colle et de joint doivent être éliminés. On nettoiera aussi les surfaces visibles avec un produit non agressif (Reynafinish 60 art.nr. 086.9210.-- ou Reynaers safety clean 086.9231.--).

1.2.3 Joints

1.2.3.1 Application du joint central (EPDM)

Étapes (voir détails de fabrication « *joint central* »)

1. Découpe correcte : couper le joint central avec le gabarit de coupe (art. n° 097.0217.00).
2. Prévoir une longueur supplémentaire (env. 10 mm par mètre).
3. Application du joint : les joints sont appliqués dans les rainures des profilés prévues à cet effet. La longueur supplémentaire est légèrement refoulée pour neutraliser le rétrécissement. L'utilisation d'un aérosol silicone (art. n° 086.9551.--) peut simplifier l'application.
4. Encollage (étanchéité) : dégraisser les coupes au Reynaers Safety Clean (art. n° 086.9231.--) et Reynaers primer seal & bond special (086.9232.--). Coller les onglets à la colle de vulcanisation Reynafix (art. n° 084.9108.--) ou avec une colle instantanée adéquate (art. n° 084.9107.--). La liaison restant élastique, le joint s'ajuste parfaitement même dans les angles.

1.2.3.2 Application du joint central (TPE)

Étapes (voir détails de fabrication « *joint central* »)

1. Découpe correcte : couper le joint central avec le gabarit de coupe (art. n° 097.0217.00).
2. Prévoir une longueur supplémentaire (env. 10 mm par mètre).
3. Application du joint : les joints sont appliqués dans les rainures des profilés prévues à cet effet. La longueur supplémentaire est légèrement refoulée pour neutraliser le rétrécissement.
4. Encollage (étanchéité) : dégraisser les coupes au Reynaers Safety Clean (art. n° 086.9231.--) et au Reynaers primer seal & bond special (086.9232.--). Coller les onglets avec une colle instantanée adéquate (art. n° 084.9107.--). La liaison restant élastique, le joint s'ajuste parfaitement même dans les angles.

Remarque : en TPE, il est également possible de souder les cadres à l'aide d'une machine à souder (art. n° 095.N200.00).

1.2.3.3 Application du joint acoustique

Étapes : (voir détails de fabrication *« joints »*)

1. Découpe correcte : couper le joint acoustique avec une cisaille à joint (art. n° 090.0121.00). Le joint se coupe droit et doit être continu dans les coins (une petite incision au niveau des coins facilite la flexion). Prévoir une longueur supplémentaire (env. 10 mm par mètre).
2. Application du joint : les joints sont appliqués dans les rainures des profilés prévues à cet effet. La longueur supplémentaire est légèrement refoulée pour neutraliser le rétrécissement. L'utilisation d'un aérosol silicone (art. n° 086.9551.--) peut simplifier l'application.
3. Encollage (étanchéité) : dégraisser les coupes au Reynaers Safety Clean (art. n° 086.9231.--) et au Reynaers primer seal & bond special (086.9232.--). Coller les raccords avec de la colle de vulcanisation Reynafix (art.nr. 084.9108.--) ou une colle instantanée adéquate (art. n° 084.9107.--). La liaison restant élastique, le joint s'ajuste parfaitement même dans les angles.
4. Découper le joint à hauteur des charnières visibles.

1.2.3.4 Application du joint de vitrage

Étapes : (voir détails de fabrication *« joints »*)

1. Découpe correcte : couper le joint de filtrage avec une cisaille à joint (art. n° 090.0121.00). Le joint doit se couper droit.
2. Application du joint : les joints sont appliqués dans les rainures des profilés prévues à cet effet. Les choix verticaux et horizontaux sont raccordés en about. La longueur supplémentaire est légèrement refoulée pour neutraliser le rétrécissement. L'utilisation d'un aérosol silicone (art. n° 086.9551.--) peut simplifier l'application.
3. Encollage (étanchéité) : dégraisser les coupes au Reynears Safety Clean (art. n° 086.9231.--) et au Reynaers primer seal & bond special (086.9232.--). Coller les raccords avec de la colle de vulcanisation Reynafix (art.nr. 084.9108.--) ou une colle instantanée adéquate (art. n° 084.9107.--). La liaison restant élastique, le joint s'ajuste parfaitement même dans les angles.

1.2.4. Montage des accessoires

Le choix des points de fixation, du nombre de points de fermeture, du nombre de charnières, du poids maxi. de l'ouvrant, des dimensions maxi. de l'ouvrant, du profilé de l'ouvrant, etc., respectera les préconisations du catalogue de systèmes et d'accessoires. Les éléments coulissants et mobiles seront lubrifiés à la graisse naturelle.

I.2 RECOMMANDATIONS DE MONTAGE

II.2.1 Stockage

Les éléments non finis et finis doivent seulement être stockés dans un local sec, à l'abri du gel.

II.2.2 Montage dans le gros œuvre

La construction et l'ancrage doivent pouvoir absorber le poids des éléments. En cas de doute, veuillez consulter un ingénieur en structure.

La fixation au gros-œuvre se fait directement à travers les profilés avec des vis d'écartement en inox ou avec des ancrages de fixation (voir catalogue « Reynaconnect »).
- Les fixations ne peuvent pas être appliquées à une distance inférieure à 40 mm du bord du mur du gros œuvre.
- L'ancrage ne peut surtout pas influencer la force portante des éléments de construction contigus.
- Tous les ancrages, pour autant qu'ils ne soient pas en aluminium ou en acier inoxydable, doivent être efficacement protégés contre la corrosion et ne peuvent pas corroder l'aluminium.
- Lors de la pose des fenêtres, on prévoit des fixations en suffisance:

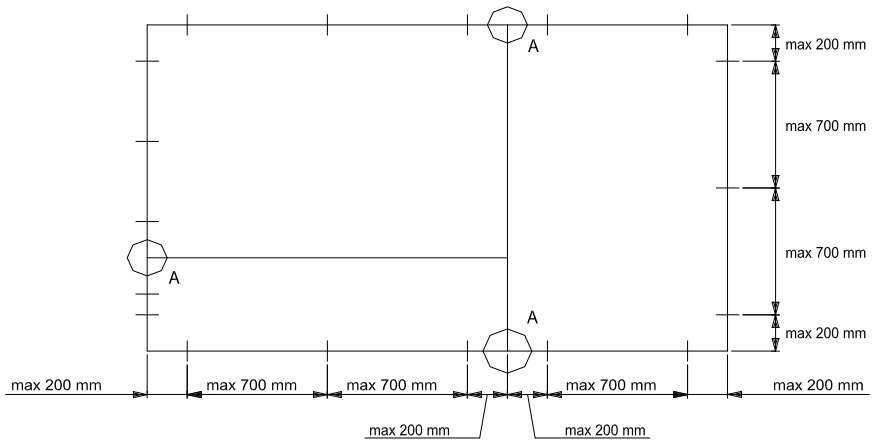

Par côté, il faut au moins 2 fixations. La distance entre la dernière fixation et l'angle ne peut dépasser 200 mm.
- La distance entre les fixations est de 700 mm au maximum.
- A l'endroit où des profilés T et des profilés dormants se rencontrent, l'ancrage doit être appliqué à une distance maximale de 200 mm des deux côtés du profilé T (A). De cette façon, une dilatation ou un rétrécissement du profilé T (dus aux fluctuations de température) sont possibles sans dégâts.
- Il est conseillé de positionner les fixations à la hauteur de chaque point de charnière et de fermeture.
- Remarque:
- Les ancrages doivent être appliqués d'une telle façon qu'ils peuvent neutraliser des dilatations/rétrécissements éventuels de la fenêtre.

Au montage, on s'assurera que les accessoires fonctionnent avec fluidité et sans à-coups.

II.3 VITRAGE

Tous nos systèmes sont conçus pour vitrer à l'aide de joints EPDM ou de silicone neutre. En cas d'utilisation d'un joint au silicone, l'usage d'un fond de joint constitué d'un joint-mousse compressible autocollant est recommandé pour maintenir un espace libre suffisant entre le verre et l'aluminium. Nous vous recommandons d'utiliser notre système de joints de vitrage pour des raisons de facilité et fiabilité de mise en œuvre, de bonne tenue dans le temps et de simplicité dans le remplacement de volumes verriers.

Le vitrage devra se faire en respectant les points suivants:
- Le vitrage respectera les normes en vigueur localement.
- Le joint de vitrage doit être refoulé et comblé pour éviter que des ouvertures apparaissent aux angles à cause du rétrécissement.
- Les éléments laqués avec coatex seront vitrés avec des joints en EPDM. La silicone ne colle pas bien à cette surface.
- La feuillure doit être drainée. Il en va de même pour un vitrage en silicone (voir détails de fabrication « drainage »).
- Si l'entretoise du vitrage n'est pas entièrement recouverte le mastic doit être résistant aux UV.
- Aucun volume verrier ne peut être directement en contact avec l'aluminium. La pose de cales de vitrage ou d'un joint est indispensable.
- Des supports de vitrage sont posés pour égaliser le fond de la feuillure. Les cales de vitrage sont posées sur ces supports. Elles doivent être suffisamment solides pour supporter le poids du verre et de chaque feuillure individuelle.
- Les supports de vitrage placé au bas de la feuillure doivent recevoir un joint (voir schéma ci-dessous)

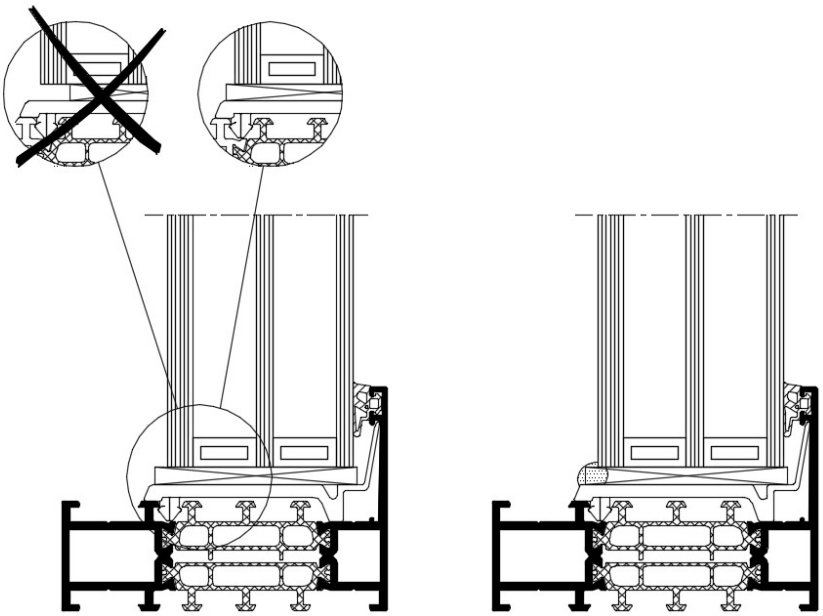

Assemblage du vitrage

Pour la fixation du vitrage dans le chassis on met des cales de vitrage entre vitrage et profil. Nous distinguons 2 types:

Cales de support ■

Cales d'ajustement ⊠

C1 : cales de support
Ces cales transmettent le poids du verre à l'ouvrant ou à l'allège. Leur pose correcte est essentielle au bon fonctionnement de la fenêtre. Elles doivent être mises en place à l'aide des outils spécifiquement prévus à cet effet.

C2 : cales d'ajustement
Ces cales garantissent le positionnement du verre par rapport à la feuillure. Elles sont appliquées sans forcer.

Les schémas suivants illustrent la position requise des cales de vitrage dans les différents types de fenêtre.

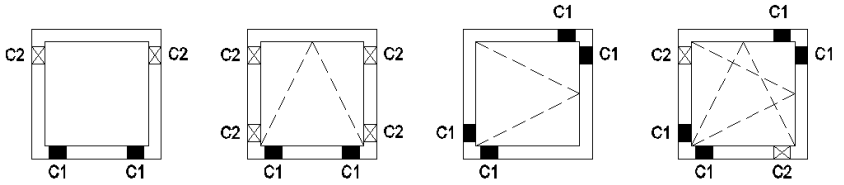

fenêtre fixe | fenêtre tombante | fenêtre ouvrante | fenêtre oscillo-battante

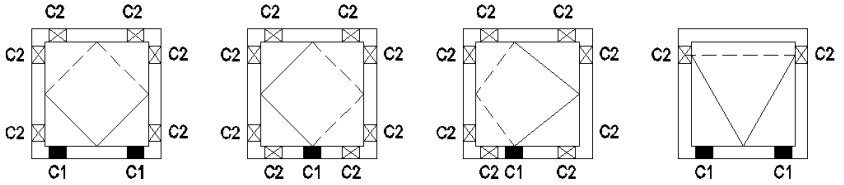

fenêtre pivotante horizontalement | fenêtre pivotante verticalement | fenêtre pivotante excentrée | fenêtre ouvrant a l'italienne

En cas de vitrage fixe, on applique les supports dans les angles de la traverse basse pour empêcher que celle-ci ne plie sous le poids du verre.

En cas de fenêtre ouvrante et oscillo-battante, le verre est calé diagonalement de l'angle inférieur de la charnière à l'angle supérieur opposé. Cela permet de supporter correctement le poids du verre et de prévenir ainsi toute déformation de l'ouvrant. Au calage, il convient de contrôler si l'ouvrant est correctement centré par rapport à l'allège. Après le calage correct de l'ouvrant, on peut ajouter des cales d'ajustement (le cas échéant) avant de poser les parcloses.

Vitrage garde-corps

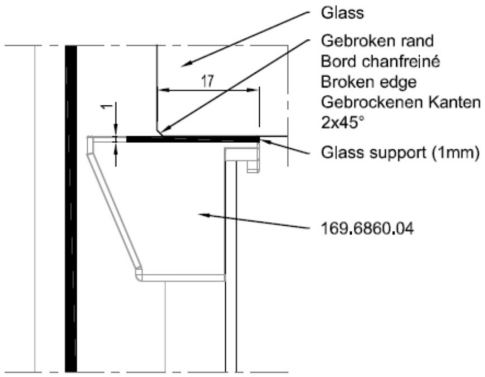

II.4 PRESCRIPTIONS COMPLÉMENTAIRES PORTES EFFET BI-MÉTAL

Nos profilés de porte sont munis de bandes isolantes perforées qui limitent dans une large mesure la déformation sous l'effet d'une importante différence de température entre l'intérieur et l'extérieur. Néanmoins, avec des profilés en métal à coupure thermique, la déformation ne pourra être entièrement évitée. Aussi recommandons-nous, dans certaines conditions, d'effectuer des opérations complémentaires pour limiter le phénomène au minimum.

Les mesures à prendre dépendent de la couleur, de la hauteur de l'ouvrant et de la position de la porte par rapport au soleil. Nous classons les couleurs RAL suivant le tableau 1. Pour les portes qui ne seront pas exposées au soleil mais devront subir d'importantes différences de température, la couleur est sans importance et l'on peut utiliser la classe 14. Le tableau 2 met les opérations en regard de la couleur et de la hauteur de l'ouvrant. Au tableau 3, on trouve l'explication des mesures à prendre.

1	5004 8022 9005
2	3004 3005 3007 4007 5003 5008 5011 5013 5020 5022 6005 6007 6008 6009 6012 6022 7021 8014 8016 8017 8019 9004 9011 9017
3	3003 3009 3011 5000 5001 5002 5010 6004 6006 6014 6015 6020 7016 7022 7024 7026 8011 8012 8015 8028
4	3000 3001 3002 3013 3027 4002 4006 5005 5009 5017 5019 6002 6003 6016 6026 6028 7009 7010 7011 7013 7015 7043 8002 8003 8007 8008 8024
5	2002 3016 3020 3031 4008 5007 5021 5023 6000 6001 6010 6025 6029 7006 7008 7012 7031 7039 8004 8025
6	2001 3017 3018 4001 4005 4010 5014 5015 6011 6013 6017 6024 6032 7003 7005 8000 8001 8023
7	1027 2004 2009 2010 2012 3022 4003 5012 5018 6018 6033 7000 7002 7023 7033 7034 7037 7046
8	1005 1011 1019 1020 1024 2000 2008 2011 3012 3014 4009 5024 6021 7001 7030 7036 7042 7045
9	1006 1007 2003 6034 7004 7040
10	1001 1002 1012 1028 1033 1034 3015 6027 7032 7038 7044
11	1000 1003 1017 1021 1023 6019 7035
12	1014 1018 7047 9018
13	1013 1015 1016
14	9003 9010 9016

Tableau 1: classification des couleurs RAL

Classe couleurs	Hauteur ouvrant (mm)									
	2100	2200	2300	2400	2500	2600	2700	2800	2900	3000
1	2	3	3	3	3	3	4	4	4	4
2	2	3	3	3	3	3	3	4	4	4
3	2	2	3	3	3	3	3	4	4	4
4	2	2	3	3	3	3	3	3	4	4
5	2	2	3	3	3	3	3	3	4	4
6	1	2	2	3	3	3	3	3	3	4
7	1	2	2	3	3	3	3	3	3	3
8	1	1	2	2	3	3	3	3	3	3
9	1	1	2	2	2	3	3	3	3	3
10	1	1	1	2	2	3	3	3	3	3
11	1	1	1	2	2	2	3	3	3	3
12	1	1	1	1	2	2	2	3	3	3
13	1	1	1	1	1	2	2	2	3	3
14	1	1	1	1	1	1	2	2	2	3

Tableau 2 : mesures à prendre en fonction de la classe de couleurs et de la hauteur de l'ouvrant

1	Pas de problèmes à prévoir
2	Utilisation recommandée de la serrure 061.8760.ZC / 061.8761.ZC **OU** Incision des angles
3	Utilisation recommandée de la serrure 061.8760.ZC / 061.8761.ZC **ET** Incision des angles
4	Nous recommandons d'éviter l'exposition directe aux rayons du soleil. Nous avons des solutions de protection solaire dans notre gamme (BS 30).

Tableau 3 : explication des mesures à prendre.

Incision des angles :

Inciser les bandes isolantes au niveau des angles du côté serrure. Cela donnera au côté serrure plus de flexibilité pour permettre à la coque intérieure et à la coque extérieure de bouger indépendamment l'une de l'autre. Le côté charnière (qui supporte le poids du verre) peut être laissé intact.

X = 300 mm
Y = 500 mm

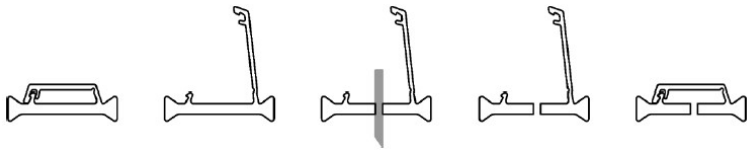

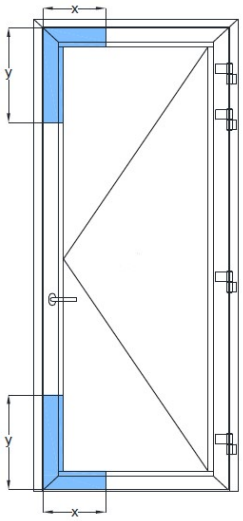

Voici comment procéder pour inciser les bandes isolantes :

1. Couper les profils
2. Ouvrez la protection de la bande.

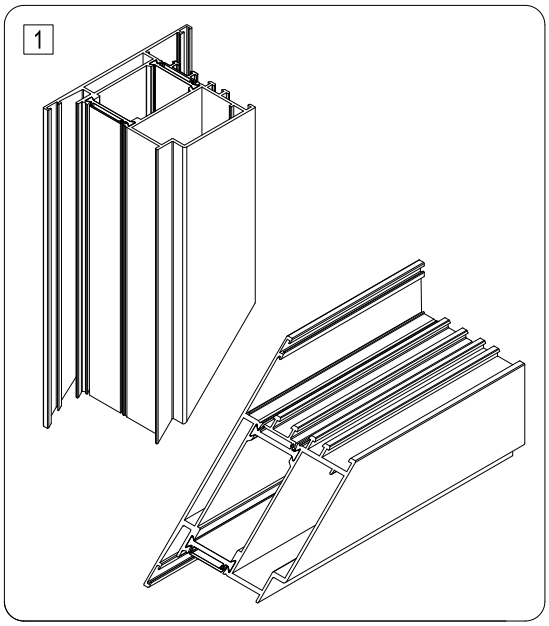

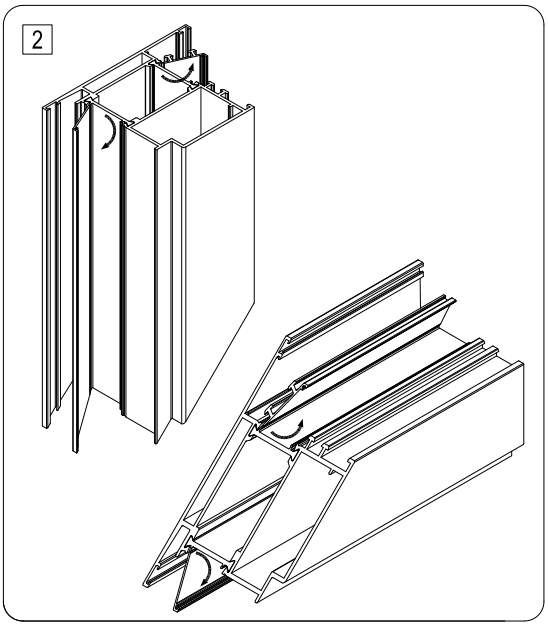

3. Incisez l'autre partie de la bande. La bande étant déjà perforée, cela peut se faire facilement avec un couteau ou une petite scie.
4. Refermez la protection. Le résultat de l'opération est soustrait au regard.

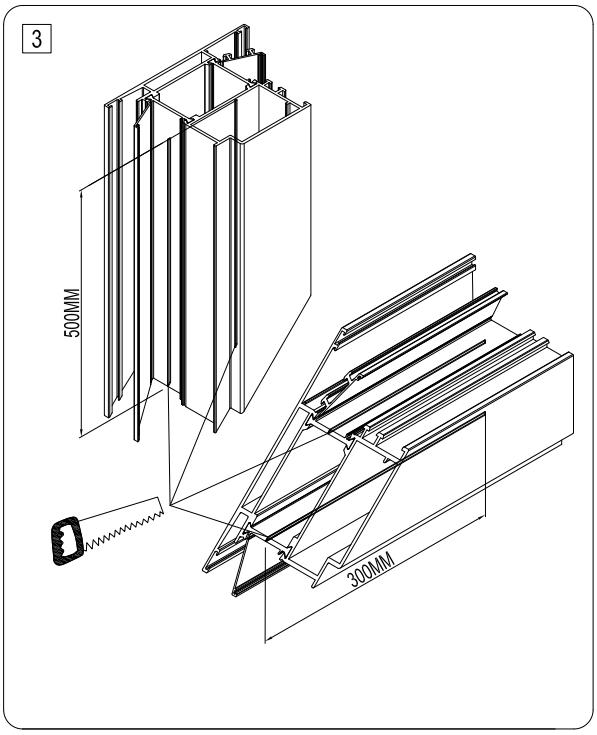

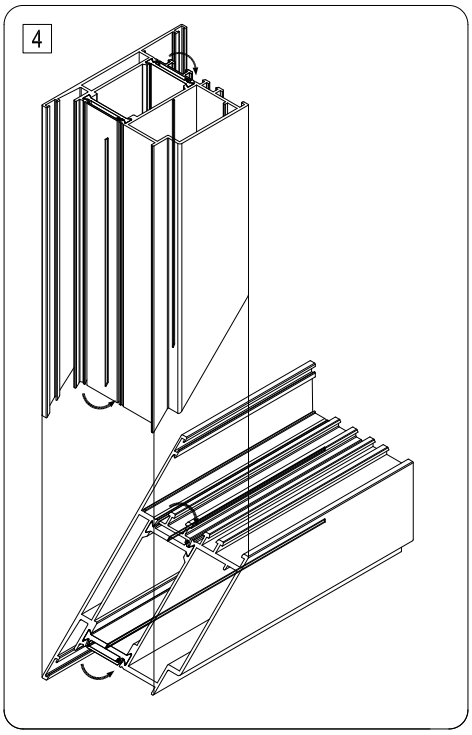

VERARBEITUNGSVORSCHRIFTEN

I .ALLGEMEIN

Siehe Katalog “1. Allgemeine information (089.C01*.**)

II.VERARBEITUNGSVORSCHRIFTEN MASTERLINE 8

II.1 VERARBEITUNG

Um ein qualitativ hochwertiges Endprodukt zu erstellen, sollen bei der Verarbeitung folgende Punkte berücksichtigt werden:

II.1.1 Spanende Bearbeitungen

Mit spanenden Bearbeitungen sind alle mechanischen Bearbeitungen, wie Sägen, Fräsen, Bohren, Stanzen gemeint.
Bei allen mechanischen Bearbeitungen ist auf den Einsatz geeigneter Sägeblätter, Fräser und Bohrer zu achten, damit die Oberfläche nicht durch Grate oder abplatzende Beschichtung beschädigt wird.
Zur Profilbearbeitung ge ben wir folgende Hinweise:

- Die spanabhebenden Werkzeuge müssen für den Werkstoff geeignet und ausreichend scharf sein.
- Die Maschine muss richtig eingestellt und auf den Werkstoff Aluminium (z.B. Drehzahl) abgestimmt sein.
- Es wird regelmäßige Wartung und Kontrolle des Werkzeugs gemäß den Vorschriften der Maschinenlieferanten ausgeführt.
- Zur Verlängerung der Werkzeugstandzeiten können geeignete Gleitmittel, wie :
  der Fettstift (Art.-Nr. 086.9191.UN);
  das Schneidmittel (Art.-Nr. 086.9175.UN)
  oder die von den Maschinenlieferanten vorgeschriebenen Kühl- und Schneidmittel
- Es die korrekten Spannbacken verwendet werden (siehe Montagezeichnung „*Spannbacken*“).
- Der Auflage- und Ablauftisch soll frei von Spänen und Verunreinigungen sein;
- Die Kühl- und Schneidmittel müssen chemisch neutrale Produkte sein, die die Oberfläche nicht angreifen.

Es empfiehlt sich, Späne abzusaugen, die während der spanenden Bearbeitung entstehen. Alle Sägeschnitte, die eine Verbindung bilden (wie z. B. Eck- und T-Verbindungen) müssen mit Reynaprotector (Art.-Nr. 086.9207.SY + 086.9225.--) geschützt werden. Andere Sägeschnitte (wie z. B. Glasleisten, Klemmleisten, Frässchnitte, Bohr- oder Stanzlöcher) müssen mit Reynastick (Art.-Nr. 086.9606.--) geschützt werden.

Für die korrekte Funktion, Leistung und Ästhetik des Endprodukts ist es sehr wichtig, dass die Profile in engen Toleranzen gesägt werden.

Toleranzen einflügeliche Fenster: Fb = A + 12mm (+0.5/-2.0mm)

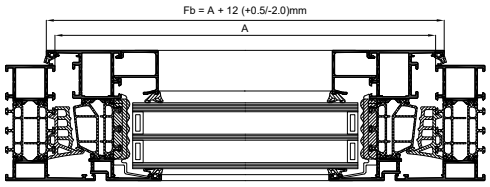

Toleranzen zweiflügeliche Fenster: $Fb_1 + Fb_2 = A + 5mm$ (+0.5/-2.0mm)

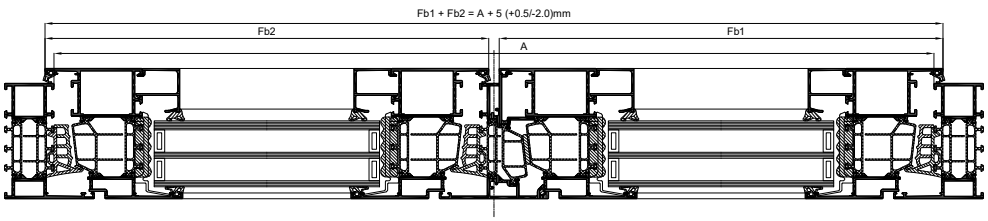

Toleranzen einflügeliche Türen: Fb = A – 12mm (+2.0/-2.0mm)

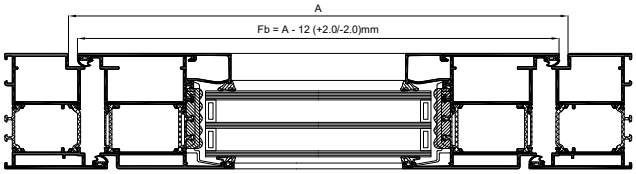

Toleranzen zweiflügeliche Türen: Fb_1+Fb_2 = A – 18mm (+2.0/-2.0mm)

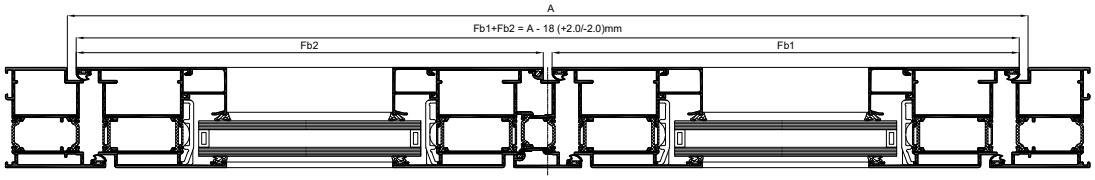

Falls strittig ist, was unter annehmbaren Abweichungen zu verstehen ist, können die Richtlinien von Instanzen wie Aluminium Center Belgium herangezogen werden.

1.1.1 Position/Klemmung der Profile während des Sägens :
Die Position der Profile auf dem Sägetisch beim Sägen ist sehr wichtig und die Grundlage für perfekte Stöße. Beim Einspannen muss die Bewegungsrichtung des Sägeblatts gegenüber dem Profil berücksichtigt werden (siehe die Abbildungen unten). Wir unterschieden primäre (1) und sekundäre (2) Einspannung. Auf die primäre Einspannung wird der stärkste Druck ausgeübt. Ob eine sekundäre Einspannung notwendig ist, hängt von der genauen Form des Profils ab.

Die Klemmblöcke müssen verwendet werden:
- um zu verhindern, dass Spiel an den Profilen die Qualität des Stoßes beeinträchtigt;
- um zu verhindern, dass sich die Profile auf dem Tisch verdrehen.

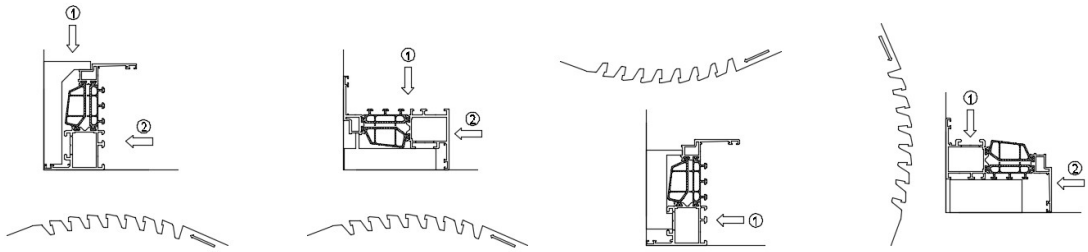

FALSCHE EINSPANNUNG

FALSCH:	Die primäre Einspannung drückt jenseits Drehpunkts gegen das Profil, wodurch es sich verdreht.
FOLGE:	Schiefer Sägeschnitt: Die Außenseite ist kürzer als die Innenseite.
ERGEBNIS:	Nach dem Verbinden der Ecken ist die Gehrung an der Innenseite dicht, aber an der Außenseite ist eine Öffnung sichtbar.

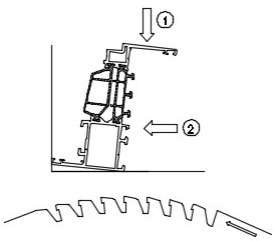

WICHTIG BEIM SÄGEN
Wenn Sie “Sobinco Chrono Safe” mit sichtbaren Scharniere verwenden für eine Flügel Dimension die kleiner ist als 600mm, müssen Sie die anliegenden Profile in Bezug auf die Scharnierseite 2 mm verkürzen in vergleich mit den Katalogwerten.

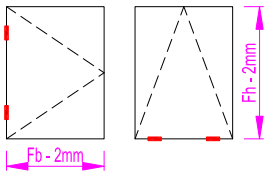

1.1.2. Entwässerung und Bearbeitung für den Beschlageinbau

Verfahrensweise:
a. die Aussparungen markieren;
b. Korrekt stanzen, bohren oder fräsen.
c. Schutz der Schnittkanten:
- Entgraten (falls erforderlich).
- Schnittfläche und Profilkammern von Staub und Sägeresten säubern.
- Entfetten der Profile (Art.-Nr. 086.9182.--).
- Reynastick Reynastick (art.nr. 086.9600.06) oder Reynaers Anti-Corro (art.nr. 086.9606.--)

Insbesondere ist auf folgendes zu achten:
Eventuell eingedrungenes Wasser muss problemlos und kontrolliert abgeleitet werden können.
Es sind entsprechende Dampfdruckausgleichsbohrungen vorzunehmen.
- Bei jedem Rahmen sind grundsätzlich zwei Entwässerungsbohrungen vorzunehmen.
  Diese sitzen max. 250 mm aus der Ecke (für spezifische Entwässerung : siehe Montagezeichnung ‘Entwässerung’) :
  Bei Rahmenbreiten bis 1000 mm sind 2 Öffnungen vorzusehen;
  bei Rahmenbreiten bis 1500 mm sind 3 Öffnungen vorzusehen
  Je weiteren 500 mm ist eine tzliche Öffnung vorzusehen.
- Die Entwässerungsöffnungen sind grundsätzlich am tiefsten Punkt der Profilkontur anzubringen.
- Die Mindestoberfläche der Entwässerungsöffnung beträgt 50 mm² pro Öffnung, wobei eine Bohrung von mind. 8 mm Durchmesser oder ein Schlitz von 5 x 15 mm vorzusehen ist.
- Alle sichtbaren Entwässerungsöffnungen müssen mit systemabhängigen Kunststoff-Abdeckkappen versehen werden.
- Alle Rahmenkonstruktionen müssen im Solbankbereich bzw. an den horizontalen T-Profilen mit entsprechenden Ausnehmungen versehen werden.
- Bei jedem Rahmen sind grundsätzlich zwei Entlüftungsbohrungen vorzunehmen (siehe Montagezeichnung ‘*Dekompression*’) damit die Druckegalisierung rundum die Verglasung zu gewährleisten.
- Bei einem festen Fenster wird die äußere Verglasungsdichtung oben in der Mitte 50 mm unterbrochen.
- Bei öffnenden Elementen werden auf beiden Seite 5 mm große Entlüftungsöffnungen seitlich in die Außenschale gebohrt.

II.1.2 Profilverbindungen und deren Verarbeitung

Folgende Verarbeitungsschritte werden unterschieden:

1. T-Verbindungen;
2. Eckverbindungen;
   - Pressen
   - Schrauben.
3. Dichtungen
4. Einbau der Beschläge

1.2.1 T-Verbindungen

Verfahrensweise (siehe Montagezeichnung „*T-Verbinder*“):

1. Korrekt sägen.
2. T-Profil ausfräsen (Höhe 27 mm)
3. Leimeinspritz- und Befestigungslöcher stanzen oder bohren
4. Die Sägeschnitte und bearbeiteten Flächen wie folgt schützen:
   - Entgraten (falls erforderlich);
   - Sägeschnittflächen und Profilkammern von Staub und Sägerückständen säubern;
   - Entfetten (Reynafinish 60 art.nr. 086.9210.-- oder Reynaers safety clean 086.9231.--)
   - Reynaprotector (Art.Nr. 086.9207.SY + 086.9225.--) auf Sägeschnittfläche/Befestigungslöcher und Reynastick (Art.Nr. 086.9606.--) auf die Säge-/Frässchnittflächen auftragen.
5. Abdichten der Zone unter dem T-Profil auf dem Rahmenprofil. Dies muss vollständig wasserdicht ausgeführt zu werden. Wenn eine Mitteldichtung angebracht wird, muss die Gummirille frei von Dichtungsmittel bleiben.
6. Verbindung herstellen: Der T-Verbinder für das Innenteil wird auf der Mittellinie positioniert und festgeschraubt, bis die Profilwand des anschließenden Profils durchbohrt ist. Das T-Profil wird darüber angebracht und mit der exzentrischen Schraube fixiert.
7. Die Verbinder für die Außenschale werden eingelegt und festgezogen. Dabei muss die eine Seite festgehalten werden, während die andere Seite angezogen wird.
8. Verbinder werden durch Einspritzen eines zugelassenen Dichtungsklebers (Reynaseal Duo, Art.-Nr. 084.9080.--) in die dafür vorgesehenen Löcher fixiert.
   - Überschüssige Reste von Kleber und Dichtungsmittel müssen entfernt und die Sichtflächen mit einem nicht aggressiven Mittel (Reynafinish 60 art.nr. 086.9210.-- oder Reynaers safety clean 086.9231.--) gereinigt werden.

1.2.2 Eckverbindungen

Bevor die Eckverbindungen hergestellt werden, soll überprüft werden ob alle notwendigen verspanenden Bearbeitungen gut gemacht sind. Einige dieser Bearbeitungen können nicht später vorgenommen werden.

1.2.2.1 Pressverbindungen

Verfahrensweise (siehe Montagezeichnung „*Eckverbindung*“): * Option A: Leim nach dem Pressen einspritzen
** Option B: Leim vor dem Pressen einspritzen

1. Korrekt sägen.
2. Leimeinspritzlöcher an beiden Enden der zu verbindenden Profile stanzen oder bohren (siehe Montagezeichnung „*Leimeinspritzung*“).
3. Sägeschnitte und bearbeitete Flächen wie folgt schützen und abdichten:
   - Entgraten (falls notwendig);
   - Sägeschnitt und Profilkammer von Staub und Sägerückständen säubern.
   - Entfetten (Reynafinish 60 art.nr. 086.9210.-- oder Reynaers safety clean 086.9231.--)
   - Reynaprotector (Art.Nr. 086.9207.SY + 086.9225.--) auf Säge-/Frässchnittflächen auftragen.
4. ** Verkleben in Profilkammer: Anbringen eines zugelassenen Dichtungsklebers (Reynaseal Duo Art.-Nr. 084.9080.--)
5. Presseckwinkel und Stützeckwinkel anbringen (siehe Montagezeichnung „*Stützeckwinkel*“)
6. Verbinden und pressen (siehe Montagezeichnung „*Eckverbindungsmaschine*“)
7. * Einen zugelassenen Dichtungskleber (Reynaseal Duo, Art.Nr. 084.9080.--) in die vorgesehenen Einspritzlöcher einspritzen. Wenn der Kleber aus dem Loch im anschließenden Profil austritt, ist die Ecke vollständig verklebt.
   - Überschüssige Reste von Kleber und Dichtungsmittel müssen entfernt und die Sichtflächen mit einem nicht aggressiven Mittel (Reynafinish 60 art.nr. 086.9210.-- oder Reynaers safety clean 086.9231.--) gereinigt werden.

1.2.2.2 Schraubverbindungen

Vorgehensweise (siehe Montagezeichnung „*Eckverbindung*“): * Option A: Kleber nach dem Schrauben einspritzen
** Option B: Kleber vor dem Schrauben einspritzen

1. Korrekt sägen.
2. Schraub- und Leimeinspritzlöcher an beiden Enden der zu verbindenden Profile stanzen oder bohren (siehe Montagezeichnung „*Leimeinspritzung*“).
3. Sägeschnitte und bearbeitete Flächen wie folgt schützen und abdichten:
   - Entgraten (falls notwendig);
   - Sägeschnitt und Profilkammer von Staub und Sägerückständen säubern.
   - Entfetten (Reynafinish 60 art.nr. 086.9210.-- oder Reynaers safety clean 086.9231.--);
   - Reynaprotector (Art.Nr. 086.9207.SY + 086.9225.--) auf die Sägeschnitte und Reynastick (Art.Nr. 086.9606.--) auf die Frässchnitte auftragen.
4. ** Verkleben in Profilkammer: Anbringen eines zugelassenen Dichtungsklebers (Reynaseal Duo Art.-Nr. 084.9080.--)
5. Press-, Schraub-, Nagel- und Stützeckwinkel anbringen (siehe Montagezeichnung „*Stützeckwinkel*“)
6. Verbindung herstellen: Schrauben anziehen und anschließend (falls zutreffend) Nägel einschlagen.
7. * Einen zugelassenen Dichtungskleber (Reynaseal Duo, Art.Nr. 084.9080.--) in die vorgesehenen Einspritzlöcher einspritzen. Wenn der Kleber aus dem Loch im anschließenden Profil austritt, ist die Ecke vollständig verklebt.
   - Überschüssige Reste von Kleber und Dichtungsmittel müssen entfernt und die Sichtflächen mit einem nicht aggressiven Mittel (Reynafinish 60 art.nr. 086.9210.-- oder Reynaers safety clean 086.9231.--) gereinigt werden.

1.2.3 Dichtungen

1.2.3.1 Anbringen der Mitteldichtung (EPDM)

Verfahrensweise (siehe Montagezeichnung „*Mitteldichtung*“)

1. Korrekt zuschneiden: Zum Zuschneiden der Mitteldichtung ist eine Schneideschablone (Art.-Nr. 097.0217.00) zu verwenden.
2. Die erforderliche Überlänge (ca. 10 mm pro Meter) muss vorgesehen werden.
3. Dichtungen einsetzen: Die Dichtungen werden in die dafür vorgesehenen Aufnahmen der Profile eingesetzt. Der überlange Zuschnitt wird leicht gestaucht, um Schrumpfung auszugleichen. Zum einfacheren Anbringen kann Silikonspray (Art.-Nr. 086.9551.--) verwendet werden.
4. Verkleben (Abdichten): Die Schnittflächen müssen mit Reynears Safety Clean (Art.-Nr. 086.9231.--) und Reynaers primer seal & bond special (086.9232.--) entfettet werden, und die Stöße müssen mit Vulkanisierkleber Reynafix (Art.-Nr. 084.9108.--). Da die Verbindung elastisch bleibt, liegt die Dichtung auch in den Ecken perfekt an.

1.2.3.2 Anbringen der Mitteldichtung (TPE)

Verfahrensweise (siehe Montagezeichnung „*Mitteldichtung*“)

1. Korrekt zuschneiden: Zum Zuschneiden der Mitteldichtung ist eine Schneideschablone (Art.-Nr. 097.0217.00) zu verwenden.
2. Die erforderliche Überlänge (ca. 10 mm pro Meter) muss vorgesehen werden.
3. Dichtungen einsetzen: Die Dichtungen werden in die dafür vorgesehenen Aufnahmen der Profile eingesetzt. Der überlange Zuschnitt wird leicht gestaucht, um Schrumpfung auszugleichen.
4. Verkleben (Abdichten): Die Schnittflächen müssen mit Reynears Safety Clean (Art.-Nr. 086.9231.--) und Reynaers primer seal & bond special (086.9232.--) entfettet werden, und die Stöße müssen mit einem dafür geeigneten Sekundenkleber (Art.-Nr. 084.9107.--) verklebt werden. Da die Verbindung elastisch bleibt, liegt die Dichtung auch in den Ecken perfekt an.

Anmerkung: In TPE ist es auch möglich, Rahmen mit Hilfe einer Schweißmaschine (Art.-Nr. 095.N200.00) zu schweißen.

1.2.3.3 Anbringen der akustischen Dichtung

Verfahrensweise (siehe Montagezeichnung „*Dichtung*“)

1. Korrekt zuschneiden: Zum Zuschneiden der Schalldichtung ist eine Dichtungsschere (Art.-Nr. 090.0121.00) zu verwenden. Diese Dichtung muss gerade zugeschnitten werden und in den Ecken durchlaufen (ein kleiner Einschnitt in den Ecken erleichtert das Biegen). Die erforderliche Überlänge (ca. 10 mm pro Meter) muss vorgesehen werden.
2. Dichtungen einsetzen: Die Dichtungen werden in die dafür vorgesehenen Aufnahmen der Profile eingesetzt. Der überlange Zuschnitt wird leicht gestaucht, um Schrumpfung auszugleichen. Zum einfacheren Anbringen kann Silikonspray (Art.-Nr. 086.9551.--) verwendet werden.
3. Verkleben (Abdichten): Die Schnittflächen müssen mit Reynears Safety Clean (Art.-Nr. 086.9231.--) und Reynaers primer seal & bond special (086.9232.--) entfettet werden, und die Anschlüsse müssen mit Vulkanisierkleber Reynafix (art.nr. 084.9108.--) oder einem dafür geeigneten Sekundenkleber (Art.-Nr. 084.9107.--) verklebt werden. Da die Verbindung elastisch bleibt, liegt die Dichtung auch in den Ecken perfekt an.
4. In Höhe sichtbarer Scharniere muss die Dichtung ausgeschnitten werden.

1.2.3.4 Anbringen der Verglasungsdichtung

Verfahrensweise (siehe Montagezeichnung „*Dichtung*“)

1. Korrekt zuschneiden: Zum Zuschneiden der Verglasungsdichtung ist eine Dichtungsschere (Art.-Nr. 090.0121.00) zu verwenden. Die Dichtung muss gerade zugeschnitten werden.
2. Dichtungen einsetzen: Die Dichtungen werden in die dafür vorgesehenen Aufnahmen der Profile eingesetzt. Die Senkrechten müssen stoßend an den Waagerechten anliegen. Der überlange Zuschnitt wird leicht gestaucht, um Schrumpfung auszugleichen. Zum einfacheren Anbringen kann Silikonspray (Art.-Nr. 086.9551.--) verwendet werden.
3. Verkleben (Abdichten): Die Schnittflächen müssen mit Reynears Safety Clean (Art.-Nr. 086.9231.--) und Reynaers primer seal & bond special (086.9232.--)entfettet werden, und die Anschlüsse müssen mit Vulkanisierkleber Reynafix (art.nr. 084.9108.--) oder einem dafür geeigneten Sekundenkleber (Art.-Nr. 084.9107.--) verklebt werden. Da die Verbindung elastisch bleibt, liegt die Dichtung auch in den Ecken perfekt an.

1.2.4. Einbau der Beschläge

Die Wahl der Befestigungspunkte, der Anzahl Schließpunkte, der Anzahl Scharniere, des max. Flügelgewichts, der max. Flügelmaße, des verwendeten Flügelprofils etc. muss nach den Richtlinien im System- und Beschlagkatalog erfolgen. Gleitende und bewegliche Teile sind mit einem neutralen Fett zu versehen.

II.2 MONTAGE

II.2.1 Lagerung

Die Lagerung nicht verarbeiteter oder verarbeiteter Elemente muss in jedem Fall in einem trockenen, frostfreien Raum erfolgen.

II.2.2 Befestigung am Baukörper

Die Konstruktion un der Verbindung muss in der Lage sein, das Gewicht der Elemente Aufzunehmen. Im Zweifelsfall bitte einen Statiker konsultieren.

Die Befestigung am Baukörper erfolgt entweder direkt durch den Falz der Profile mit Edelstahl-Abstandsschrauben oder mit Befestigungsankern (siehe Katalog „Reynaconnect“).

- Beim Einsatz von Schrauben und Dübeln ist zu gewährleisten, dass ein Mindestabstand von 40 mm vom Rand des Baukörpers eingehalten wird
- Die Verankerung ist so zu wählen, dass die auf die Fensterkonstruktion einwirkenden Lasten sicher an den Baukörper abgeleitet werden.
- Alle zum Einsatz kommenden Verankerungen sollen aus Aluminium oder Edelstahl bzw. korrosionsgeschützt sein, damit die Aluminiumprofile nicht angegriffen werden.
- Die Anzahl der Befestigungspunkte ist wie folgt festzulegen:

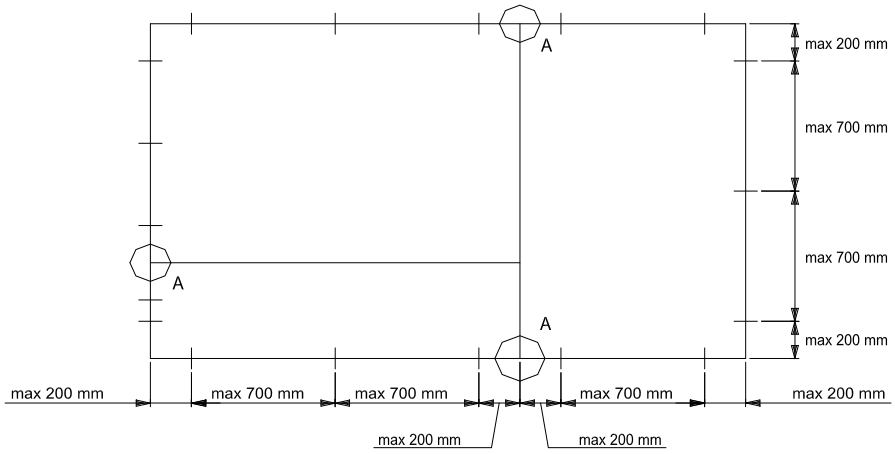

Auf jeder Rahmenseite müssen mindestens 2 Befestigungen mit höchstens 200 mm Abstand von den Ecken angebracht werden.

- Der max. Abstand zur Rahmenecke darf 200 mm nicht unterschreiten.
- Der max. Abstand der Befestigungspunkte untereinander darf 700 mm nicht unterschreiten.
- Im Bereich von Pfosten- und Riegelanschluss sind die Befestigungspunkte ebenfalls 200 mm aus der Ecke vorzunehmen.
- Es wird empfohlen, die Befestigungspunkte in den Bereich der Eck- und Scherenlager bzw. der Türbänder sowie im Bereich der Verriegelungspunkte (des Schlosses) zu legen.

Anmerkung:
Die Befestigungen sollen so angebracht werden, dass ein eventuelles Arbeiten der Aluminiumelemente aufgenommen werden kann

Bei der Montage ist zu kontrollieren, ob der Beschlag leichtgängig zu betätigen ist.

II.3 VERGLASUNG

Alle Reynaers-Systeme können mit speziellen EPDM-Dichtprofilen als Trockenverglasung oder als Nassverglasung (Silikon) auf Vorlegeband mit Vorprimern verarbeitet werden.
Wir empfehlen den Einsatz unserer EPDM-Dichtprofile, da diese leicht zu verarbeiten sind und den Austausch beschädigter Verglasungen oder Paneele erleichtern.

Bei der Verglasung müssen folgende Punkte berücksichtigt werden:
- Das einzusetzende Glas muss den am Ort geltenden Normen entsprechen.
- Die Verglasungsdichtung muss gestaucht und abgedichtet sein, damit nicht durch Schrumpfung Öffnungen in den Ecken entstehen.
- Elementen mit Coatex Lackierung sollen mit EPDM-Dichtungsprofilen verarbeitet werden. Silikondichtstoff hat auf diesem Substrat keine gute Haftung.
- Der Glasfalz muss eine Entwässerung haben. Das ist auch bei Verglasung mit Silikondichtstoff notwendig (siehe Montagezeichnung „Entwässerung“).
- Wenn der Abstandhalter im Glas nicht vollständig abgedeckt ist muss die dichtung UV-beständig sein.
- Keine Glasscheibe darf direkt mit Aluminium in Berührung kommen, ohne dass zwischen Aluminium und Glas Verglasungsklötze oder eine Gummidichtung angebracht ist.
- Glasauflageprofile werden zum Ausgleich der Falzbasis verwendet. Darauf werden Verglasungsklötze angebracht. Diese müssen stark genug sein, um das Glasgewicht tragen und jede separate Glasscheibe abstützen zu können.
- Die Glasauflageprofile an der Unterseite der Glasscheibe müssen abgedichtet werden (siehe die Zeichnung unten)

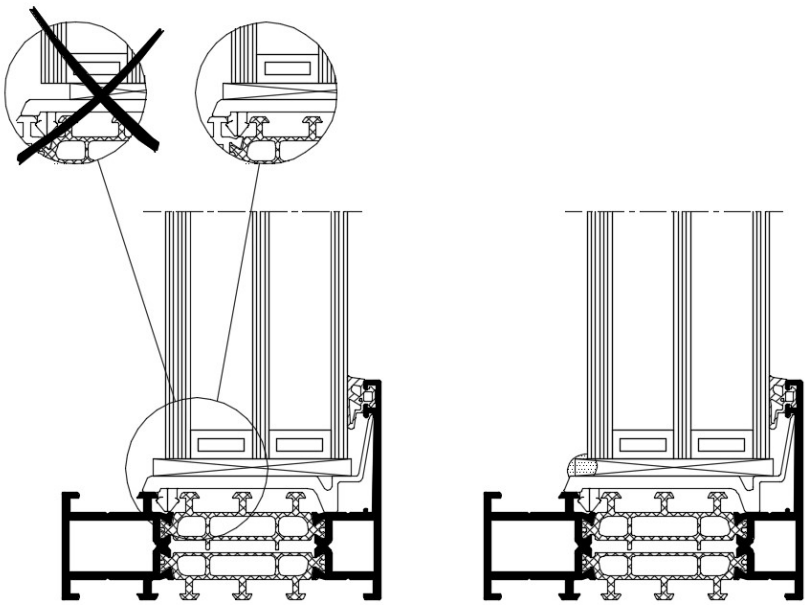

Befestigung der Verglasung

Für die Befestigung der Verglasung im Fenster werden Verglasungsklötzen angewendet. Wir unterscheiden 2 Arten:

Tragklötze ■

Distanzklötze ☒

C1: Tragklötze
Diese Tragklötze übertragen das Gewicht des Glases auf den Flügel oder den Fensterrahmen. Korrektes Positionieren ist wichtig, um eine einwandfreie Funktion des Fensters zu gewährleisten. Die Klötze müssen mit einem dafür vorgesehenen Spezialwerkzeug positioniert werden.

C2: Distanzklötze
Diese Blöcke sichern die Glasposition im Falz. Die Klötze werden ohne stärke Kraftaufwendung angebracht.

Die folgenden Abbildungen zeigen die erforderliche Position der Verglasungsklötze in den verschiedenen Fenstertypen.

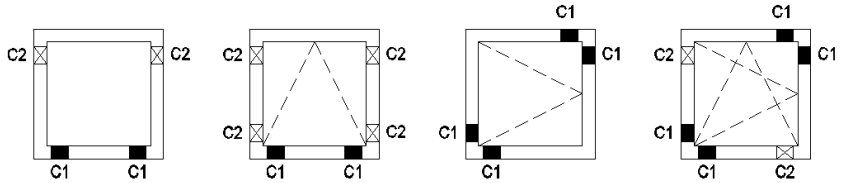
C1
C2
C2
C1
C1
C2
C2
C1
C1
C2
C2
C1
C1
C2
C1
C1
C2
C1
C1

II.4 ERGÄNZENDE VORSCHRIFTEN FÜR TÜREN MIT BIMETALL-EFFEKT

Unsere Türprofile sind mit perforierten Isolierstreifen ausgestattet, die das Verziehen unter dem Einfluss starker Temperaturunterschiede zwischen innen und außen weitgehend begrenzen. Dennoch wird es bei thermisch unterbrochenen Metallprofilen nie ganz zu vermeiden sein. Darum empfehlen wir, unter bestimmten Bedingungen zusätzliche Bearbeitungen vorzunehmen, um das Phänomen auf ein Minimum zu begrenzen.

Welche Maßnahmen zu treffen sind, hängt von der Farbe, der Flügelhöhe und der Position der Tür zur Sonne ab. RAL-Farben sind nach Tabelle 1 klassifiziert. Bei Türen, die nicht dem Sonnenlicht ausgesetzt sind, bei denen aber dennoch starke Temperaturunterschiede zu erwarten sind, hat die Farbe keinen Einfluss und kann Klasse 14 verwendet werden. In Tabelle 2 sind die Maßnahmen je nach Farbklasse und Flügelhöhe aufgeführt. In Tabelle 3 sind die zu treffenden Maßnahmen erklärt.

1	5004 8022 9005
2	3004 3005 3007 4007 5003 5008 5011 5013 5020 5022 6005 6007 6008 6009 6012 6022 7021 8014 8016 8017 8019 9004 9011 9017
3	3003 3009 3011 5000 5001 5002 5010 6004 6006 6014 6015 6020 7016 7022 7024 7026 8011 8012 8015 8028
4	3000 3001 3002 3013 3027 4002 4006 5005 5009 5017 5019 6002 6003 6016 6026 6028 7009 7010 7011 7013 7015 7043 8002 8003 8007 8008 8024
5	2002 3016 3020 3031 4008 5007 5021 5023 6000 6001 6010 6025 6029 7006 7008 7012 7031 7039 8004 8025
6	2001 3017 3018 4001 4005 4010 5014 5015 6011 6013 6017 6024 6032 7003 7005 8000 8001 8023
7	1027 2004 2009 2010 2012 3022 4003 5012 5018 6018 6033 7000 7002 7023 7033 7034 7037 7046
8	1005 1011 1019 1020 1024 2000 2008 2011 3012 3014 4009 5024 6021 7001 7030 7036 7042 7045
9	1006 1007 2003 6034 7004 7040
10	1001 1002 1012 1028 1033 1034 3015 6027 7032 7038 7044
11	1000 1003 1017 1021 1023 6019 7035
12	1014 1018 7047 9018
13	1013 1015 1016
14	9003 9010 9016

Tabelle 1: Klassifizierung von RAL-Farben

Farb-klasse	**Flügelhöhe (mm)**									
	2100	2200	2300	2400	2500	2600	2700	2800	2900	3000
1	2	3	3	3	3	3	4	4	4	4
2	2	3	3	3	3	3	3	4	4	4
3	2	2	3	3	3	3	3	4	4	4
4	2	2	3	3	3	3	3	3	4	4
5	2	2	3	3	3	3	3	3	4	4
6	1	2	2	3	3	3	3	3	3	4
7	1	2	2	3	3	3	3	3	3	3
8	1	1	2	2	3	3	3	3	3	3
9	1	1	2	2	2	3	3	3	3	3
10	1	1	1	2	2	3	3	3	3	3
11	1	1	1	2	2	2	3	3	3	3
12	1	1	1	1	2	2	2	3	3	3
13	1	1	1	1	1	2	2	2	3	3
14	1	1	1	1	1	1	2	2	2	3

Tabelle 2: Zu treffende Maßnahmen nach Farbklasse und Flügelhöhe

1	Keine Probleme zu erwarten
2	Verwendung von Schloss 061.8760.ZC / 061.8761.ZC empfohlen **ODER** Einschneiden der Ecken
3	Verwendung von Schloss 061.8760.ZC / 061.8761.ZC empfohlen **UND** Einschneiden der Ecken
4	Wir empfehlen, eine direkte Exposition an Sonnenlicht zu vermeiden. Wir haben Lösungen zum Sonnenschutz im Programm (BS 30).

Tabelle 3: Erklärung der zu treffenden Maßnahmen.

Einschneiden in den Ecken:

Die Isolierstreifen in den Ecken an der Schlossseite einschneiden. Auf diese Weise ist die Flexibilität auf der Schlossseite größer, sodass sich die Innen- und Außenschale unabhängig voneinander bewegen können. Die Bandseite (die das Glasgewicht trägt) kann intakt gelassen werden.

X = 300 mm
Y = 500 mm

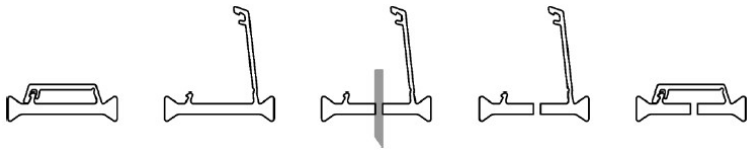

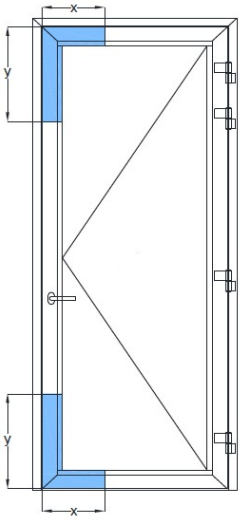

Einschnitte in die Isolierung können wie folgt vorgenommen werden:

1. Profile Sägen .
2. Die Abdeckkappe des Streifens öffnen

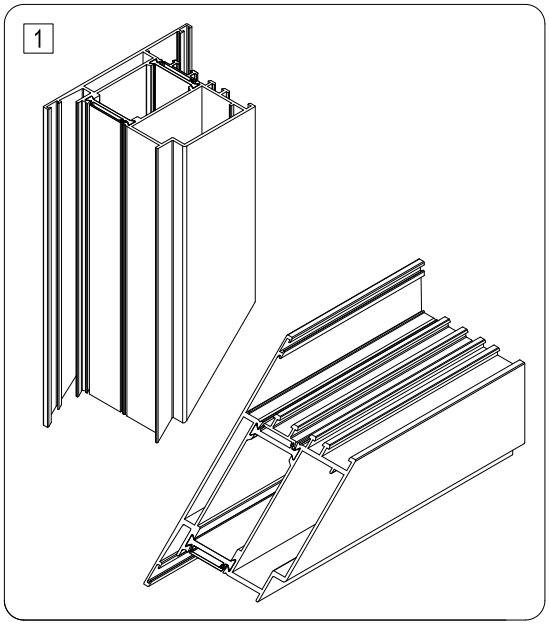

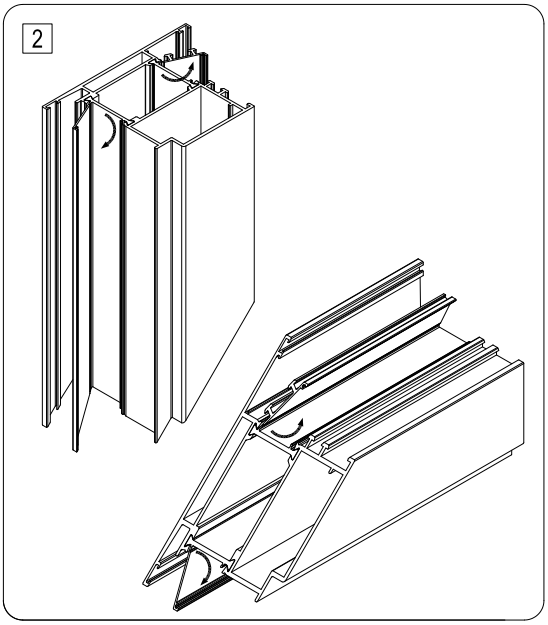

3. Den übrigen Teil des Streifens einschneiden. Da der Streifen bereits perforiert ist, lässt sich dies leicht mit einem Messer oder kleinen Sägeblatt ausführen.
4. Die Abdeckkappe schließen. Die Anpassung ist der Sicht entzogen.

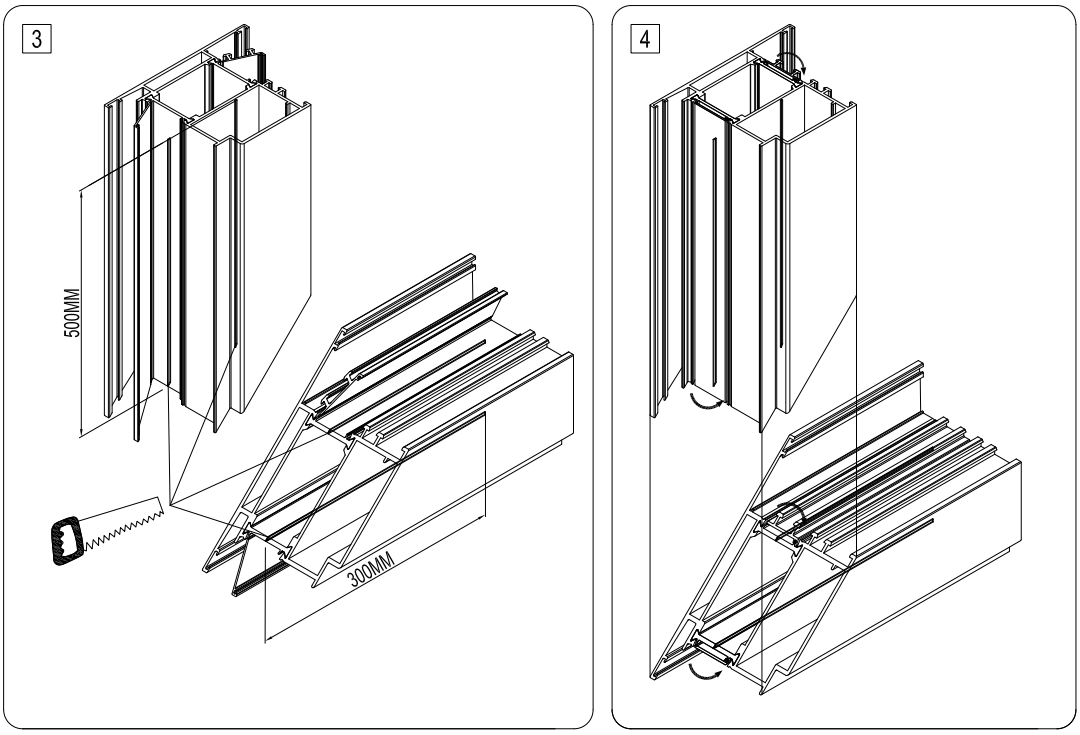

PROCESSING DATA

I. GENERAL

See catalogue “1.General information” (089.C01*.**)

II. PROCESSING DATA MASTERLINE 8

II.1 FABRICATING INSTRUCTIONS

In order to guarantee a perfect end product, the following guidelines should be adhered to during the production process.

II.1.1 Metal-removing operations

Metal-removing operations are understood to mean all mechanical operations such as sawing, milling, drilling, punching and cutting. For painted profiles it is essential that the paint coatings do not come off on the edges during these operations. Therefore it is very important for the quality of the connections that:

- the metal-removing tools are appropriate and sufficiently sharp;
- the machines are well regulated and adjusted (e.g. number of revolutions);
- the tools are regularly maintained and checked in accordance with the instructions of the machine suppliers;
- the metal-removing tools are greased sufficiently and correctly:
  cutting grease block (art.no. 086.9191.UN) for saw blades,
  cutting spray (art.no. 086.9175.UN) for punch tools
  or the cooling agents and lubricants prescribed by the machine suppliers;
- the correct clamp blocks are used; (see assembly drawings ‘clamp blocks’)
- the cutting table is free of swarf and dust;
- possible cooling is done by means of chemically neutral products which do not attack the surface treatment.

It is recommended to vacuum-extract any chips produced during machining. All cuts that form a joint, such as: corner and T-joints, must be protected with Reynaprotector (art.no. 086.9207.SY + 086.9225.--). Other cuts, such as glazing beads, terminal strips, etc. must be protected with Reynastick (art.no. 086.9606.--), as well as milling cuts, boreholes, punch holes, etc.

To function correctly, and to achieve the performances and aesthetics of the end product, it is very important that the profiles are sawn within close tolerances.

Cutting tolerances single windows: Fb = A + 12mm (+0.5/-2.0mm)

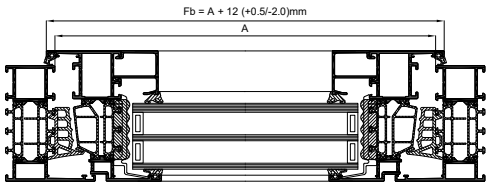

Cutting tolerances double windows: $Fb_1 + Fb_2 = A + 5mm$ (+0.5/-2.0mm)

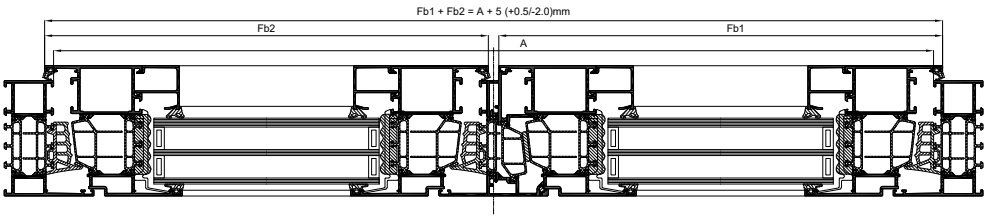

Cutting tolerances single doors: Fb = A – 12mm (+2.0/-2.0mm)

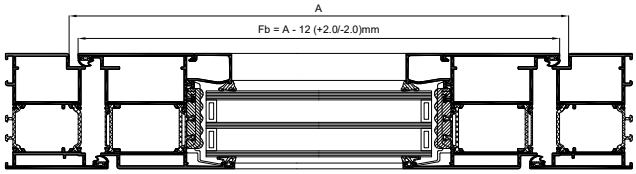

Cutting tolerances double doors: Fb_1+Fb_2 = A – 18mm (+2.0/-2.0mm)

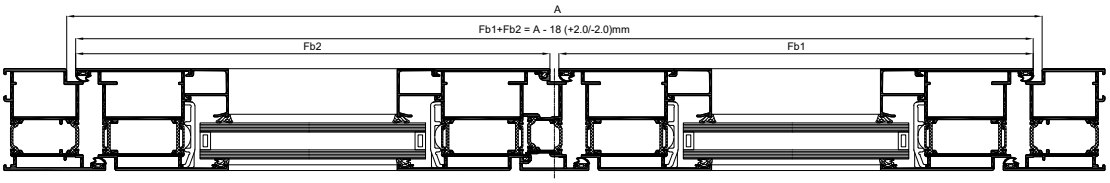

If there is disagreement about what is meant by acceptable deviations, the guidelines of bodies such as the Aluminium Center Belgium can be consulted.

Position/clamping of the profiles during cutting:
The position of the profiles on the sawing table during cutting is very important and is the basis to get perfect mitres. When clamping, account should be taken of the direction of movement of the saw blade in relation to the profile (see diagrams below). We distinguish between primary (1) and secondary (2) clamping. The greatest pressure is exerted on the primary clamping. The need for the secondary clamping depends on the exact design of the profile.

The clamp blocks should be used:
a. to ensure that tolerances on the profiles do not influence the quality of the mitre;
b. to ensure that the profiles do not twist on the table.

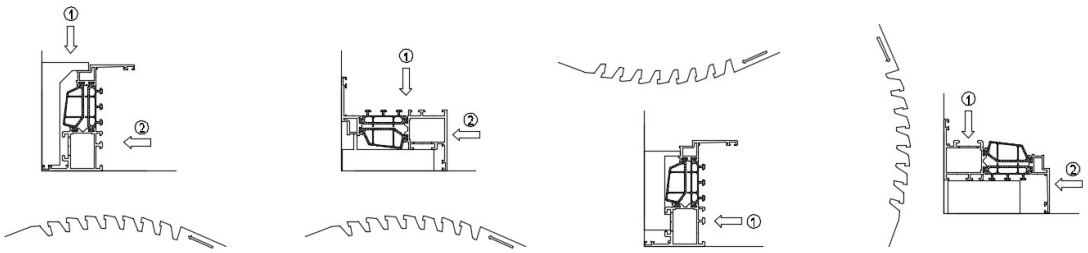

INCORRECT CLAMPING

FAULT:	The primary clamping pressure goes past the tipping point of the profile, causing it to tilt.
CONSEQUENCE:	An oblique saw cut resulting in the outside of the profile being shorter than the inside.
RESULT:	After the corners have been joined, the mitre is closed on the inside but an opening is visible on the outside.

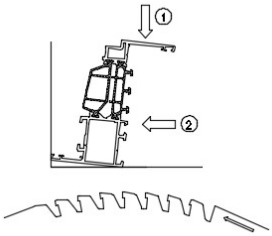

IMPORTANT WHEN SAWING
If you use “Sobinco Chrono Safe” with visible hinges for a vent size less than 600mm, you have to shorten the adjoining profiles relative to the hinge side 2mm compared to the normal catalogue values.

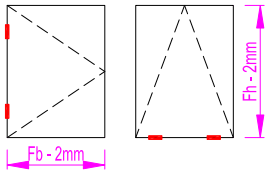

1.1.2. Drainage and recesses for the accessories
Steps:
a. Marking of recesses
a. Correct punching, drilling or milling.
b. Protection of the treated surfaces by :
- deburring (if necessary);
- removing dust and saw-dust on the saw cuts and in the profile chamber;
- degreasing (Reynafinish 60 art.nr. 086.9210.-- or Reynaers safety clean 086.9231.--)
- applying Reynastick (art.nr. 086.9600.06) or Reynaers Anti-Corro (art.nr. 086.9606.--)

Special attention should be paid to the following regarding drainage:
Possible infiltrating water must be drained smoothly under control and one must be sure that the profile’s chambers remain at atmospheric pressure.
- For windows, drainage holes should be a maximum of 250 mm from the corner (for specific drainage: see assembly drawings ‘drainage’)
  up to a window width of 1000 mm: 2 drainage holes;
  up to a window width of 1500 m: 3 drainage holes.
  Additional holes are required every 500 mm.
- Always drain at the lowest point of the glass rebate.
- The minimum surface of these openings is 50 mm² per opening, either a round opening of minimum 8 mm diameter, or elongated openings of minimum 5 mm by 15 mm.
  Drainage holes which are visible on the outside of the window are covered with drainage covers in synthetic material.
  All window types must be provided with a drainage system in the sills and/or the horizontal transoms.
- All window types are provided with ventilation holes (see assembly drawing ‘decompression’). Its function is to guarantee the pressure equalization around the glazing.
- In case of fixed windows, centrally on top the outer glazing gasket is interrupted over a length of 50mm.
- In case of opening parts, 5 mm vent holes are drilled on both sides, laterally in the outer profile half.

II.1.2 Assembly

We make the following subdivision:

1. T-brackets;
2. Corner connections
   - crimping
   - screwing
3. Gaskets
4. Fitting of the accessories

1.2.1. T-brackets

Steps (see assembly drawings '*T-connection*'):

a. Correct sawing
b. Milling out the transom-mullion (height 27 mm)
c. Punching or drilling of glue-injection and mounting holes
d. Protection of the saw cuts and treated surfaces by:
   - deburring (if necessary);
   - removing dust and saw-dust on the saw cut and in the profile chambers;
   - degreasing (Reynafinish 60 art.nr. 086.9210.-- or Reynaers safety clean 086.9231.--);
   - applying Reynaprotector (art. no. 086.9207.SY + 086.9225.--) on the saw cuts/mounting holes and Reynastick (art. no. 086.9606.--) on the saw/milling cuts.
e. Sealing of the zone under the transom-mullion on the outer frame. This should be completely watertight. If a central gasket is fitted, the rubber groove must be kept free of sealant.

f. Making the connection: the T-bracket for the inner profile half is positioned on the centre line and fixed with screws until the profile wall of the adjacent profile has been drilled through. The transom-mullion is mounted on top of this and secured with the eccentric screw.
g. The brackets for the outer profile half are inserted and tightened. One side must be held in place while the other side is tightened.
h. Brackets are secured with an approved sealing glue (Reynaseal Duo art.no. 084.9080.--), to be injected into the designated holes.
i. Surplus residues of adhesive and sealant must be removed and the visible surfaces cleaned with a non-aggressive product (Reynafinish 60 art.nr. 086.9210.-- or Reynaers safety clean 086.9231.--).

1.2.2. Corner connections

Before the corner connections are made it should be verified that all metal-removing operations required for the assembly of the window have been correctly made. Some of these operations can't be done anymore afterwards.

1.2.2.1 Crimping

Steps (see assembly drawing 'corner connection'):

* option A: glue injection after crimping
** option B: glue injection before crimping

a. Correct sawing
b. Punching or drilling holes for glue injection at both ends of the profiles to be joined (see assembly drawing *'glue injection'*)
c. Protection and sealing of the saw cuts and treated surfaces by:
   - deburring (if necessary);
   - removing dust and saw-dust on the saw cut and in the profile chamber;
   - degreasing (Reynafinish 60 art.nr. 086.9210.-- or Reynaers safety clean 086.9231.--)
   - applying Reynaprotector (art.no. 086.9207.SY + 086.9225.--) on saw/milling cuts.
4. **Gluing in the profile chamber: applying an approved sealing glue (Reynaseal Duo art.no. 084.9080.--)
5. Applying crimp corner cleats and rebate support (see assembly drawing '*rebate support*')
6. Making the connection and crimping (see assembly drawing '*crimping machine*')
7. *Glue injection at the height of the injection holes by means of an approved sealing glue (Reynaseal Duo art.no. 084.9080.--). When the glue emerges through the hole in the adjacent profile, the corner is fully glued.
8. Surplus residues of adhesive and sealant must be removed and the visible surfaces cleaned with a non-aggressive product (Reynafinish 60 art.nr. 086.9210.-- or Reynaers safety clean 086.9231.--).

1.2.2.2. Screws

Steps (see assembly drawing "*corner joint*")

* option A: glue injection after screwing
** option B: glue injection before screwing

1. Correct sawing
2. Punching or drilling screw holes and holes for glue injection* at both ends of the profiles to be joined (see assembly drawing *'glue injection'*)
3. Protecting and sealing the saw cuts and worked surfaces by:
   - deburring (if necessary);
   - removing dust and saw-dust on the saw cuts and in the profile chamber;
   - degreasing (Reynafinish 60 art.nr. 086.9210.-- or Reynaers safety clean 086.9231.--);
   - applying Reynaprotector (art. no. 086.9207.SY + 086.9225.--) to the saw cuts and Reynastick (art. no. 086.9606.--) to the milling cuts.
4. **Gluing in the profile chamber: applying an approved sealing glue (Reynaseal Duo art.no. 084.9080.--)
5. Applying screw corner cleats, corner cleats with drive pin and rebate support (see assembly drawing *'rebate support'*)
6. Make the connection: tighten screws and then (if applicable) hammer in nails.
7. *Glue injection at the height of the injection holes by means of an approved sealing glue (Reynaseal Duo art.no. 084.9080.--). When the glue emerges through the hole in the adjacent profile, the corner is fully glued.
8. Surplus residues of adhesive and sealant must be removed and the visible surfaces cleaned with a non-aggressive product (Reynafinish 60 art.nr. 086.9210.-- or Reynaers safety clean 086.9231.--).

1.2.3 Gaskets

1.2.3.1. Applying the central gasket (EPDM)

Steps (see assembly drawing '*central gasket*')
1. Correct cutting: the central gasket should be cut with a cutting template (art. no. 097.0217.00).
2. Extra overhanging (about 10 mm per metre) is required.
3. Application of the gasket: the gaskets are applied in the appropriate grooves within the profiles; they should be cut slightly longer than is necessary to compensate for any shrinkage that may occur. Difficulties in applying the gasket can be solved by the use of silicone spray (art.no. 086.9551.--).
4. Gluing (sealing): the cuts should be degreased with Reynaers Safety Clean (art. no. 086.9231.--) and Reynaers primer seal & bond special (086.9232.--) and the mitres should be glued with vulcanizing glue (art. no. 084.9108.--). Because the connection remains elastic, the gasket will also fit perfectly into the corners.

1.2.3.2. Applying the central gasket (TPE)

Steps (see assembly drawing '*central gasket*')
1. Correct cutting: the central gasket should be cut with a cutting template (art. no. 097.0217.00).
2. Extra overhanging (about 10 mm per metre) is required.
3. Application of the gasket: the gaskets are applied in the appropriate grooves within the profiles; they should be cut slightly longer than is necessary to compensate for any shrinkage that may occur.
4. Gluing (sealing): the cuts should be degreased with Reynaers Safety Clean (art. no. 086.9231.--) and Reynaers primer seal & bond special (086.9232.--) and the mitres should be glued with a suitable instant glue (art. no. 084.9107.--). Because the connection remains elastic, the gasket will also fit perfectly into the corners.

Note: it is also possible in TPE to weld frames using a welding machine (art. no. 095.N200.00).

1.2.3.3. Applying the acoustic gasket

Steps (see assembly drawing '*gasket*')
1. Correct cutting: the acoustic gasket should be cut with gasket shears (art.no. 090.0121.00). This gasket should be cut straight and should continue into the corners (small cuts in the corners will facilitate the bending). Extra overhanging (about 10 mm per metre) is required.
2. Application of the gasket: the gaskets are applied in the appropriate grooves within the profiles; they should be cut slightly longer than is necessary to compensate for any shrinkage that may occur. Difficulties in applying the gasket can be solved by the use of silicone spray (art.no. 086.9551.--).
3. Gluing (sealing): the cuts should be degreased with Reynaers Safety Clean (art. no. 086.9231.--) and Reynaers primer seal & bond special (086.9232.--) and the joints should be glued with vulcanizing glue Reynafix (art.nr. 084.9108.--) or a suitable instant glue (art. no. 084.9107.--). Because the connection remains elastic, the gasket will also fit perfectly into the corners.
4. The gasket should be cut out around visible hinges.

1.2.3.4. Applying the glazing gaskets

Steps (see assembly drawing '*gasket*')

1. Correct cutting: the glazing gasket should be cut with gasket shears (art.no. 090.0121.00). This gasket should be cut straight.
2. Application of the gasket: the gaskets are applied in the appropriate grooves within the profiles, and the verticals should butt up against the horizontals; they should be cut slightly longer than is necessary to compensate for any shrinkage that may occur. Difficulties in applying the gasket can be solved by the use of silicone spray (art.no. 086.9551.--).
3. Gluing (sealing): the cuts should be degreased with Reynaers Safety Clean (art. no. 086.9231.--) and Reynaers primer seal & bond special (086.9232.--) and the joints should be glued with vulcanizing glue Reynafix (art.nr. 084.9108.--) or a suitable instant glue (art. no. 084.9107.--). Because the connection remains elastic, the gasket will also fit perfectly into the corners.

1.2.4. Fitting of the accessories

The choice of the fixing points, number of locking points, number of hinges, max. vent weight, max. vent sizes, vent profile used etc. depends on the instructions in the system and accessory catalogue. Sliding and moving parts should be provided with neutral grease.

II.2 INSTALLATION

II.2.1 Storage

Unfinished or finished elements should always be stored in a dry, frost-free room.

II.2.2 Fitting in the structural work

The sub structure and the connection should be able to take up the weight of the elements. In case of doubt, please contact a structural engineer.

The fixing to the structural work is done either directly through the rebate of the profiles with stainless steel spacer screws, or by means of fixing lugs (see Reynaconnect" catalogue)..

- The fixings may not be applied less than 40 mm from the edge of the wall of the structural work.
- The anchoring may in no way influence the bearing power of the adjacent building parts.
- All anchorings, as far as they are not made of aluminium or stainless steel, should be adequately corrosion protected and may not attack the aluminium themselves.
- When fitting the windows, sufficient fixings are required:

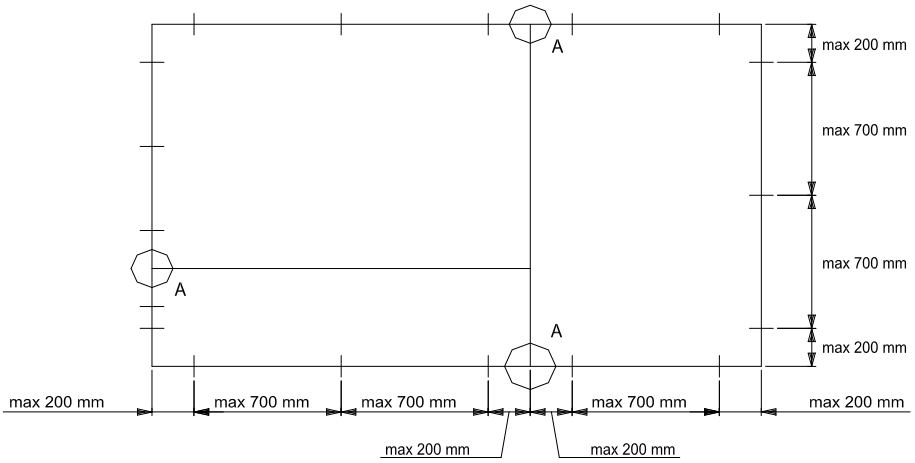

At least two fixings should be applied on each side; the maximum distance to the corner is at least 200 mm.

- The distance between the fixings is maximum 700 mm.
- Where transom/mullions and outer frame profiles meet, the fixing must be applied maximum 200 mm from both sides of the transom/mullion (A). In this way, expansion and shrinkage of the transom/mullion (because of fluctuations of temperature) are possible without any damage.
- We recommend to position the fixings at the height of each hinge and locking point.

When fitting, please check whether all accessories can be operated easily and without getting stuck.

II.3 GLAZING

Reynaers' systems are designed for EPDM gasket or neutral silicone glazing. In case of silicone glazing a spacer tape should be applied to create a correct opening between the glass panel and the aluminium frame. For easy and reliable fitting, durability and reglazing simplicity, we recommend using only Reynaers' gaskets - specially adapted for our profiles.

The following precautions should be taken when fitting the glazing:
- The glass to be fitted must satisfy locally applicable standards.
- Cut and seal the glazing gaskets slightly longer than is necessary to avoid openings in the corners at a later stage.
- Elements finished with coatex surface treatment should be glazed with EPDM-rubbers. Silicone does not adhere well to this substrate.
- The glass rebate should be drained. This is also necessary in the case of silicone glazing (see assembly drawing 'drainage').
- If the spacer in the glass is not completely covered the sealant should be UV-resistant.
- No glass panel may be in direct contact with aluminium without inserting glazing blocks or a rubber gasket.
- Glass supports are used to level out the bottom of the rebate. Glazing blocks are placed on these. They must be sufficiently strong to bear the weight of the glass and support each individual glass plate.
- The glass supports on the bottom of the glass panel should be sealed (see drawing below).

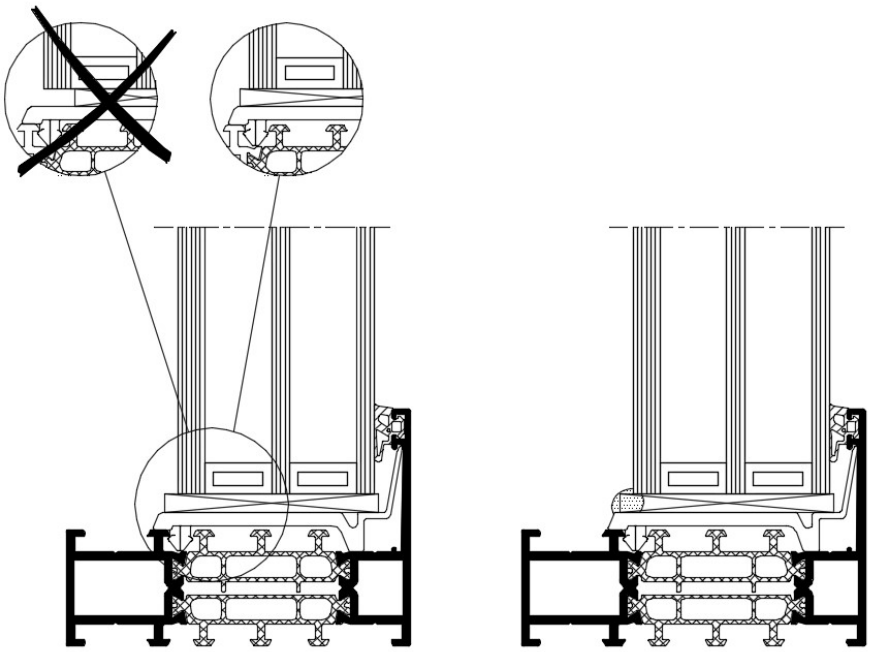

Fitting of the glass panels

To fix the glazing units in the window frame we place glazing blocks between the glass and the profiles. We distinguish between 2 types:

Support blocks 

Adjusting blocks 

C1: support blocks
These support blocks distribute the weight of the glass onto the vent or the outer frame. Correct positioning is very important to ensure the vent functions correctly. They should be installed using tools specifically intended for the purpose.

C2: adjusting blocks
These blocks guarantee the position of the glass in the rebate. They must be positioned without twisting or damaging the profile.

The following diagrams indicate the required position of the glazing blocks in different types of windows.

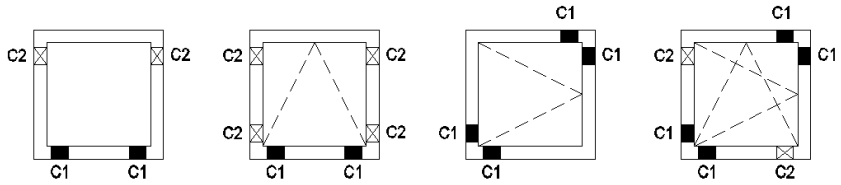

fixed window | bottom-hung window | side-hung window | turn and tilt window

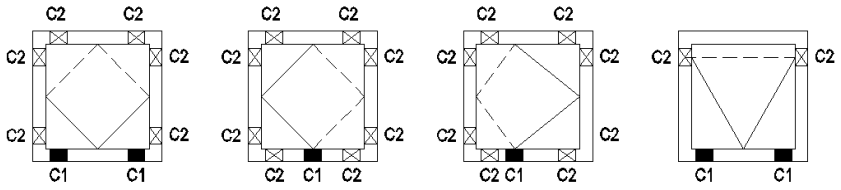

pivot window | pivoted window | eccentric pivoted window | top-hung window

In the case of a fixed window the supports are applied in the corners of the sill in order to prevent them from bending under the glass weight.

In the case of side-hung and turn-and-tilt windows, the glass is wedged diagonally from hinge corner to the opposite top corner. This spreads the weight of the glass correctly, preventing distortion of the window vent. When wedging the glass, check whether the vent is positioned centrally in relation to the frame. If the vent is correctly wedged, the adjusting blocks (if applicable) can be added before beading.

Glazing balustrade

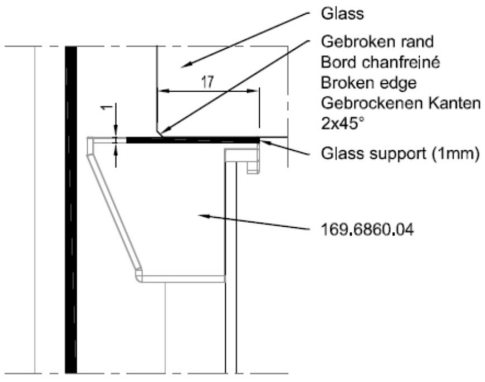

II.4 ADDITIONAL INSTRUCTIONS RELATED TO BI-METAL EFFECT DOORS

Our door profiles are fitted with perforated insulating strips that largely limit warping - and therefore loss of functionality - under the influence of a major difference in temperature between inside and outside. But because of the nature of 2 metal profiles connected to each other by an insulator, the bi metal effect cannot be reduced to zero. We therefore recommend carrying out additional operations under certain conditions to keep the phenomenon to a minimum.

The action to be taken depends on the colour, vent height and position of the door in relation to the sun. We classify RAL colours in accordance with table 1. For doors that will not be exposed to sunlight but where major differences in temperature are still expected, the colour does not matter and class 14 can be used. Table 2 links the actions to colour class and vent height. Table 3 contains the explanation of the actions to be taken.

For MasterLine 8: To avoid possible air leakage due to door warping, gasket 080.9095.04 can be used (See passive door).

1	5004 8022 9005
2	3004 3005 3007 4007 5003 5008 5011 5013 5020 5022 6005 6007 6008 6009 6012 6022 7021 8014 8016 8017 8019 9004 9011 9017
3	3003 3009 3011 5000 5001 5002 5010 6004 6006 6014 6015 6020 7016 7022 7024 7026 8011 8012 8015 8028
4	3000 3001 3002 3013 3027 4002 4006 5005 5009 5017 5019 6002 6003 6016 6026 6028 7009 7010 7011 7013 7015 7043 8002 8003 8007 8008 8024
5	2002 3016 3020 3031 4008 5007 5021 5023 6000 6001 6010 6025 6029 7006 7008 7012 7031 7039 8004 8025
6	2001 3017 3018 4001 4005 4010 5014 5015 6011 6013 6017 6024 6032 7003 7005 8000 8001 8023
7	1027 2004 2009 2010 2012 3022 4003 5012 5018 6018 6033 7000 7002 7023 7033 7034 7037 7046
8	1005 1011 1019 1020 1024 2000 2008 2011 3012 3014 4009 5024 6021 7001 7030 7036 7042 7045
9	1006 1007 2003 6034 7004 7040
10	1001 1002 1012 1028 1033 1034 3015 6027 7032 7038 7044
11	1000 1003 1017 1021 1023 6019 7035
12	1014 1018 7047 9018
13	1013 1015 1016
14	9003 9010 9016

Table 1: classification of RAL colours

Colour class	Vent height (mm)									
	2100	2200	2300	2400	2500	2600	2700	2800	2900	3000
1	2	3	3	3	3	3	4	4	4	4
2	2	3	3	3	3	3	3	4	4	4
3	2	2	3	3	3	3	3	4	4	4
4	2	2	3	3	3	3	3	3	4	4
5	2	2	3	3	3	3	3	3	4	4
6	1	2	2	3	3	3	3	3	3	4
7	1	2	2	3	3	3	3	3	3	3
8	1	1	2	2	3	3	3	3	3	3
9	1	1	2	2	2	3	3	3	3	3
10	1	1	1	2	2	3	3	3	3	3
11	1	1	1	2	2	2	3	3	3	3
12	1	1	1	1	2	2	2	3	3	3
13	1	1	1	1	1	2	2	2	3	3
14	1	1	1	1	1	1	2	2	2	3

Table 2: Actions to be taken depending on colour class and vent height

1	No problems to be expected
2	Recommendation to avoid cylinder operated locks **OR** Cutting the corners **AND/OF** The use of a continuous door puller (408.7555.XX / 408.7556.XX).
3	Recommendation to avoid cylinder operated locks **AND** Cutting the corners **AND** The use of a continuous door puller (408.7555.XX / 408.7556.XX).
4	We recommend avoiding direct solar radiation on the door. We have shading solutions in our range (BS 30).

Table 3: explanation of actions to be taken

Cutting in the corners:

Cut the insulator in the corners at the lock side. In this way the lock side has more flexibility which allows the inner and outer scale to move more freely relative to each other. The hinge side (which takes the weight of the glass) can be left intact.

X = 300 mm
Y = 500 mm

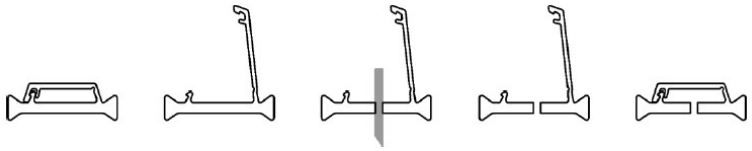

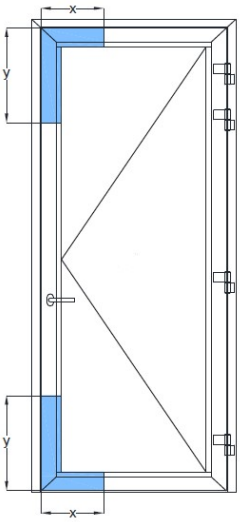

The cut-out of the insulation strips can be done as follows:

1. Cutting the profiles
2. Open the cover of the flexible strip

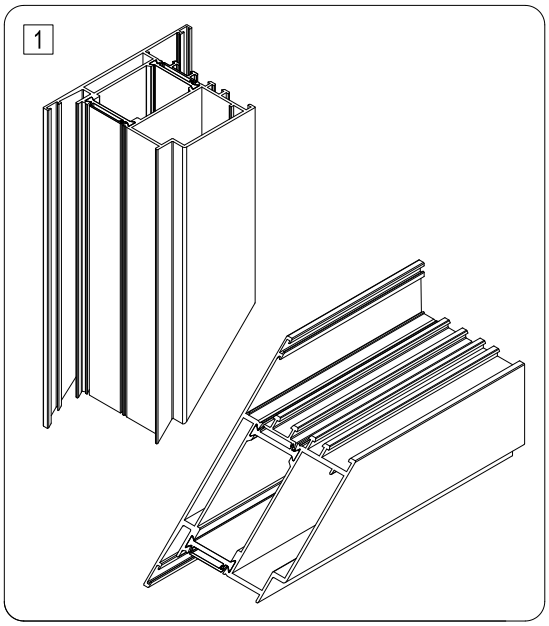

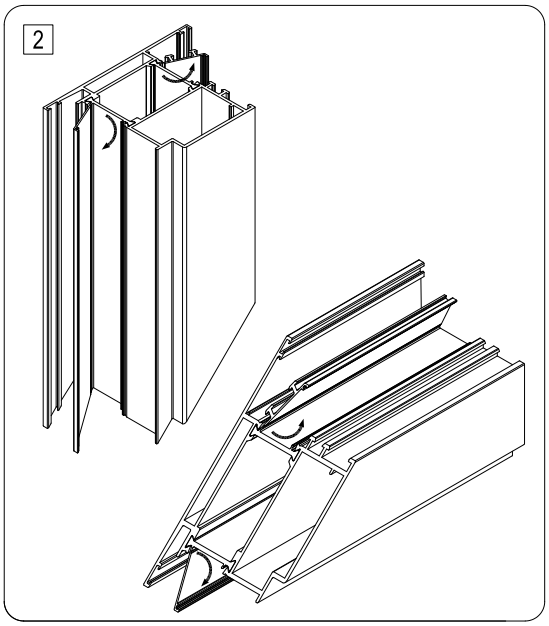

3. Cut the remaining part of the strip. Because the strip itself is already pre-punched, this can be done easily with a knife or a small sawing blade.
4. Close the cover again. Because of the cover of the flexible strip, the modification is invisible.

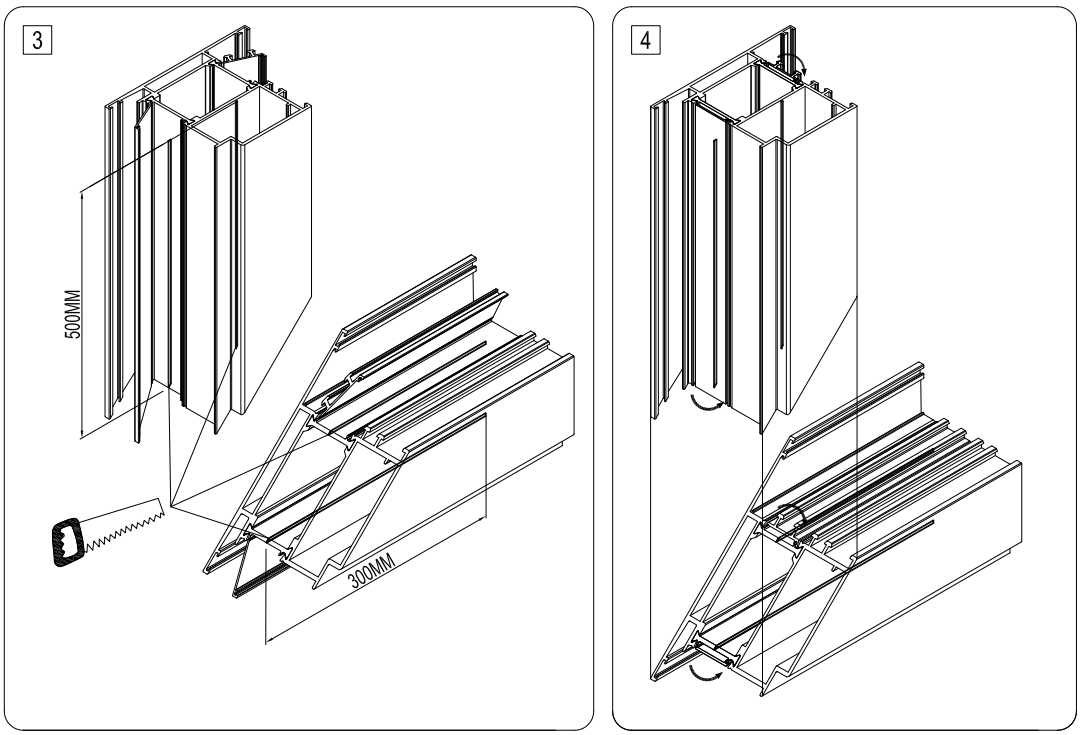

Sections
Snedes
Coupes
System-schnittzeichnungen

Reynaers Aluminium

PROFILE OVERVIEW MASTERLINE 8

PROFILE OVERVIEW

MASTERLINE 8-De, MASTERLINE 8-Fu, MASTERLINE 8-HV, MASTERLINE 8-Re

408.0136.XX
508.0136.XX HI+

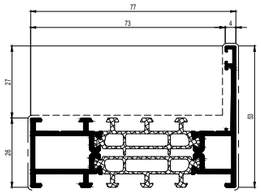

408.0183.XX
508.0183.XX HI+

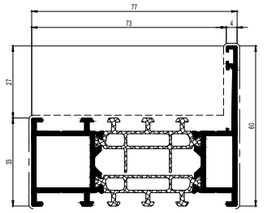

408.0160.XX
508.0160.XX HI+

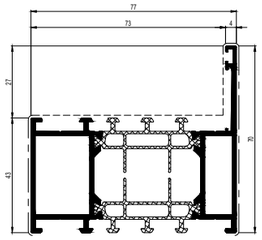

408.0125.XX
508.0125.XX HI+

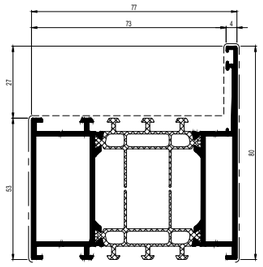

408.0169.XX
4F8.0169.XX FOAM INCLUDED
508.0169.XX HI+
5F8.0169.XX HI+ FOAM INCLUDED

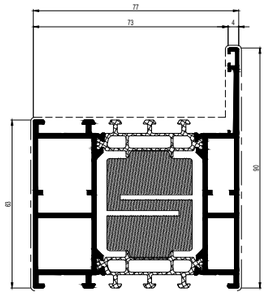

408.1142.XX
4F8.1142.XX FOAM INCLUDED
508.1142.XX HI+
5F8.1142.XX HI+ FOAM INCLUDED

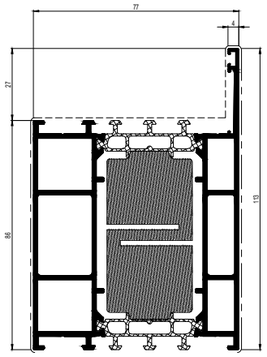

408.1140.XX
508.1140.XX HI+

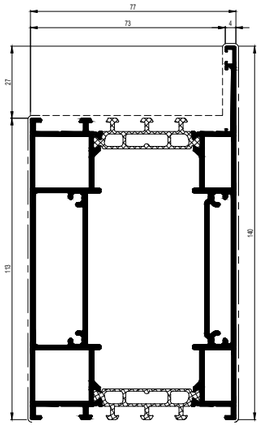

408.0825.XX
508.0825.XX HI+

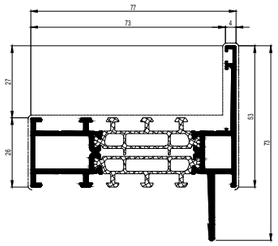

408.0826.XX
508.0826.XX HI+

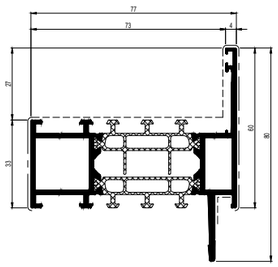

508.0828.XX

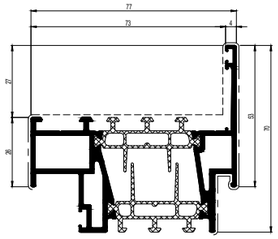

408.8100.XX

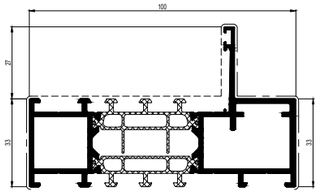

408.8110.XX
508.8110.XX HI+

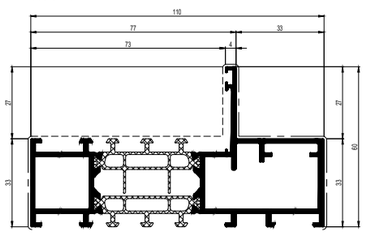

408.8130.XX
508.8130.XX HI+

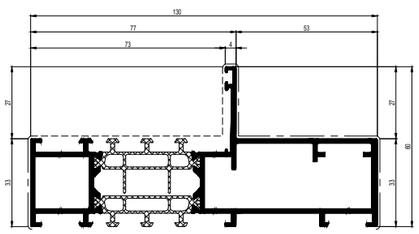

408.8139.XX
508.8139.XX HI+

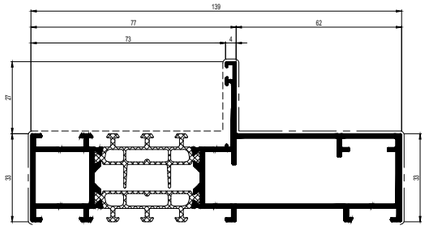

408.8155.XX
508.8155.XX HI+

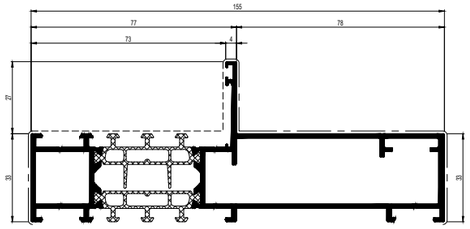

408.8160.XX

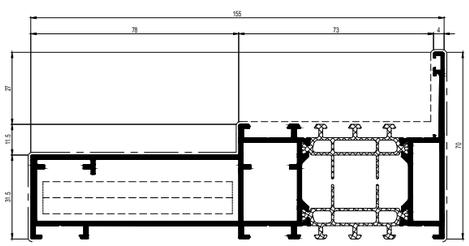

408.0161.XX
508.0161.XX HI+

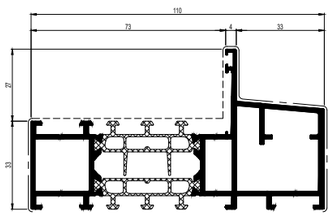

408.0162.XX
508.0162.XX HI+

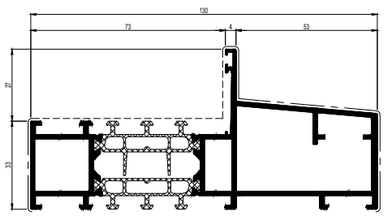

408.0163.XX
508.0163.XX HI+

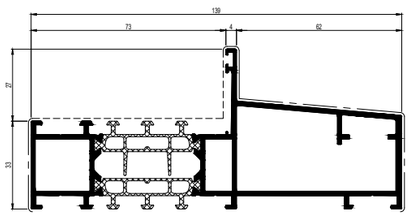

408.0164.XX
508.0164.XX HI+

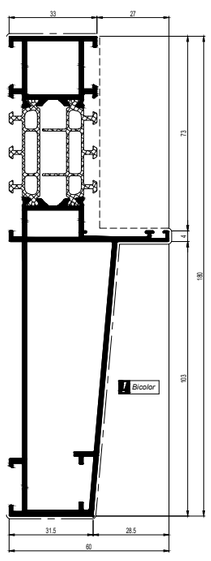

408.0884.XX
508.0884.XX HI+

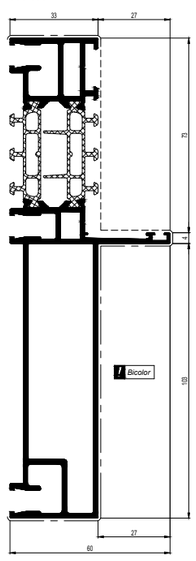

408.0438.XX
508.0438.XX HI+

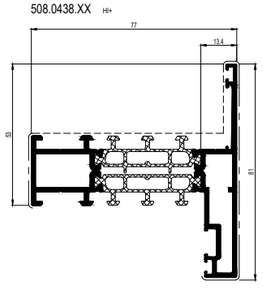

408.0439.XX

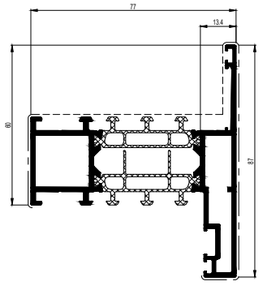

408.0450.XX

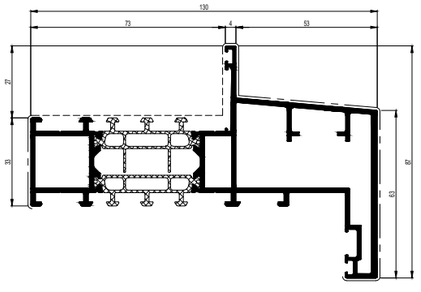

408.0541.XX
508.0541.XX HI+

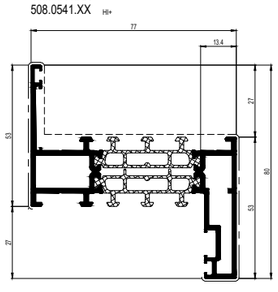

408.1541.XX

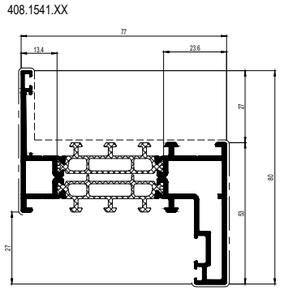

PROFILE OVERVIEW MASTERLINE 8

PROFILE OVERVIEW

MASTERLINE 8-De, MASTERLINE 8-Fu, MASTERLINE 8-HV, MASTERLINE 8-Re

408.0186.XX
508.0186.XX HI+

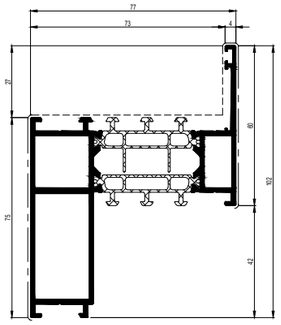

408.0369.XX

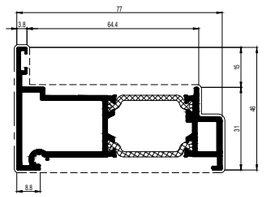

408.0359.XX

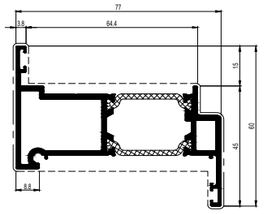

408.1030.XX

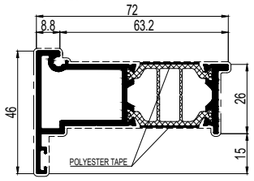

408.4001.XX
508.4001.XX HI+

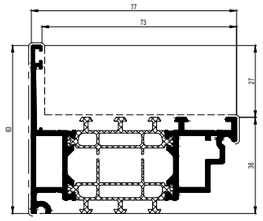

508.4001.XX

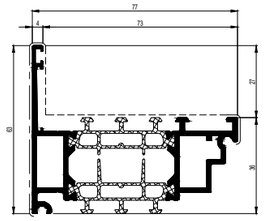

408.0880.XX
508.0880.XX HI+

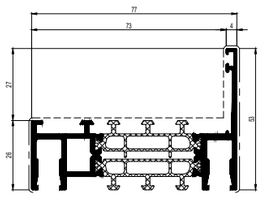

508.0881.XX

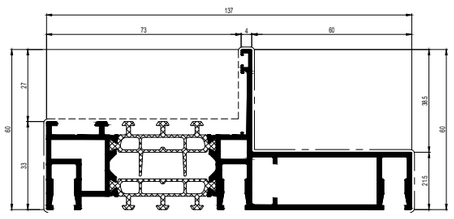

408.0882.XX
508.0882.XX HI+

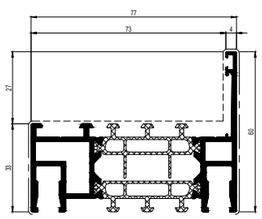

408.0885.XX
508.0885.XX HI+

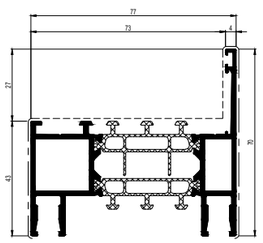

408.0886.XX
508.0886.XX HI+

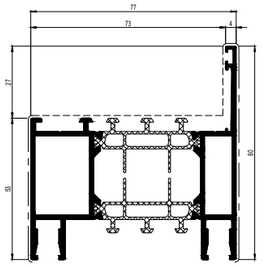

408.0883.XX
508.0883.XX HI+

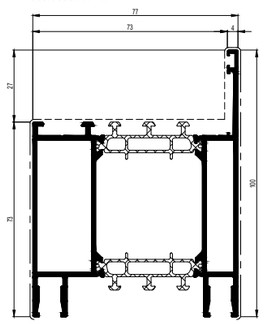

408.0887.XX
508.0887.XX HI+

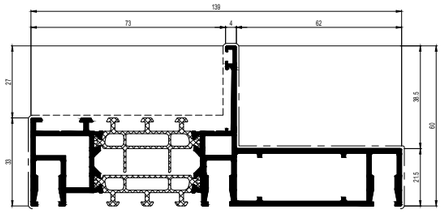

408.0888.XX
508.0888.XX HI+

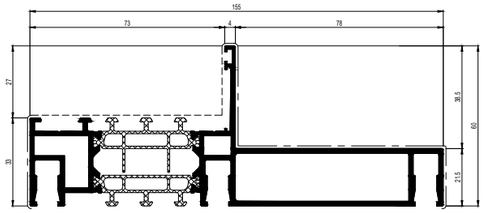

408.0889.XX
508.0889.XX HI+

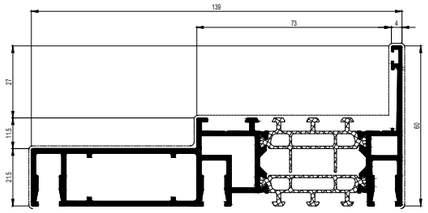

408.0872.XX
508.0872.XX HI+

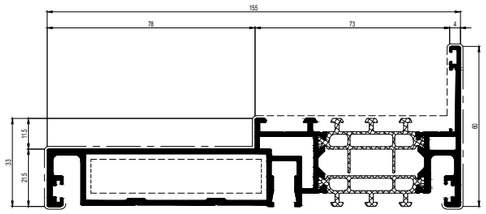

408.0873.XX
508.0873.XX HI+

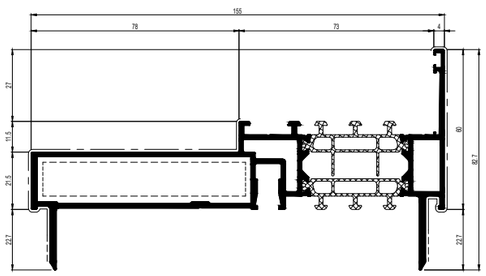

408.0879.XX
508.0879.XX

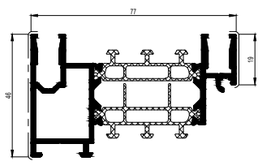

408.0079.XX

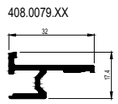

408.0081.XX



108.1015.XX

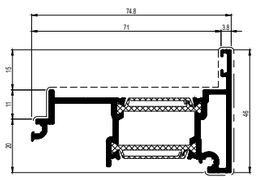

108.1815.XX

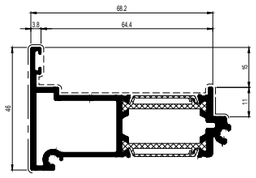

408.0105.XX
508.0105.XX HI+

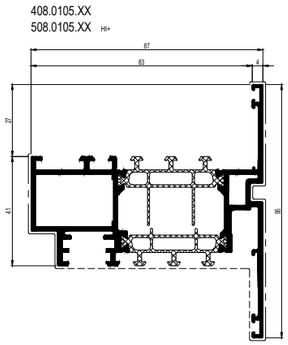

408.1515.XX
508.1515.XX HI+

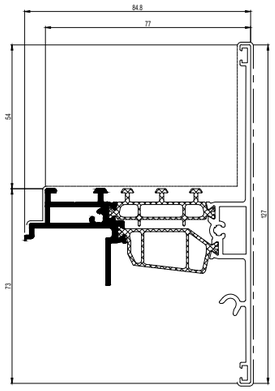

PROFILE OVERVIEW MASTERLINE 8

PROFILE OVERVIEW

MASTERLINE 8-De, MASTERLINE 8-Fu, MASTERLINE 8-HV, MASTERLINE 8-Re

408.0442.XX
508.0442.XX HI+

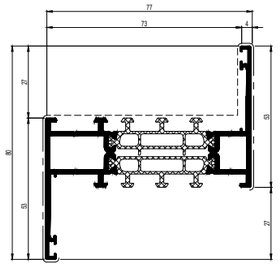

408.0443.XX
508.0443.XX HI+

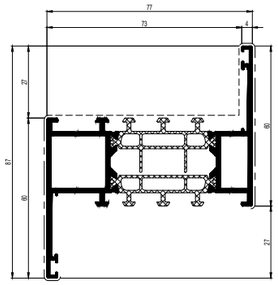

408.0444.XX
508.0444.XX HI+

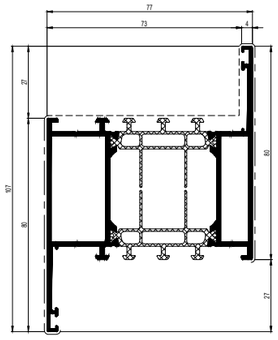

408.0446.XX

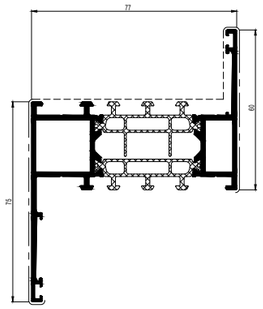

408.0452.XX

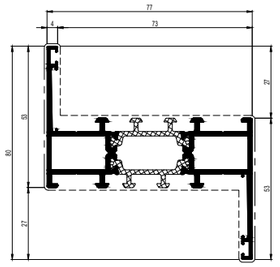

408.0453.XX

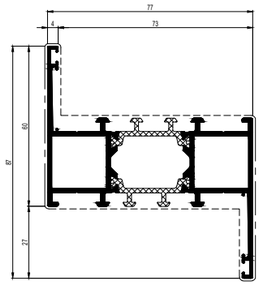

408.0454.XX

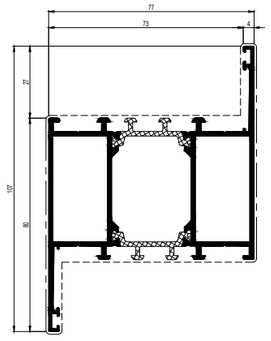

508.0442.XX HI+

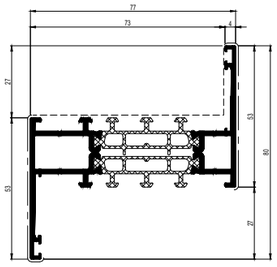

508.0443.XX HI+

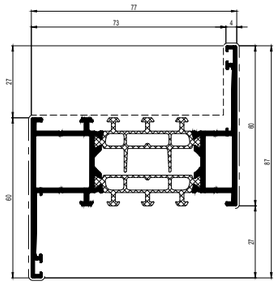

508.0444.XX HI+

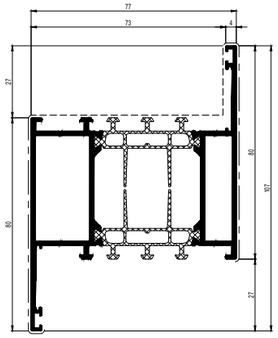

408.0041.XX

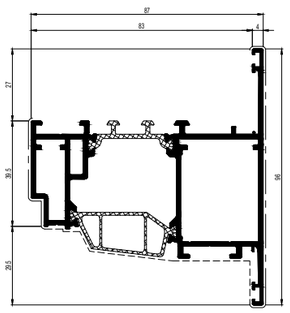

408.1051.XX
4F8.1051.XX FOAM INCLUDED
508.1051.XX
5F8.1051.XX FOAM INCLUDED

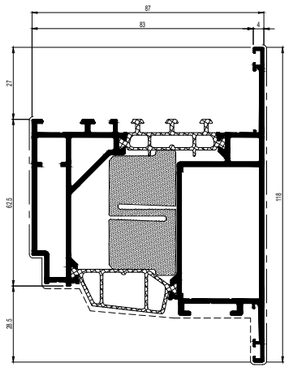

508.1535.XX HI+

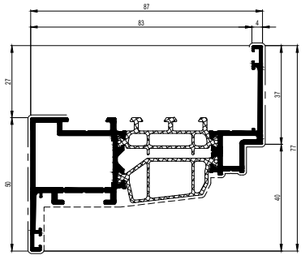

408.0102.XX
508.0102.XX HI+

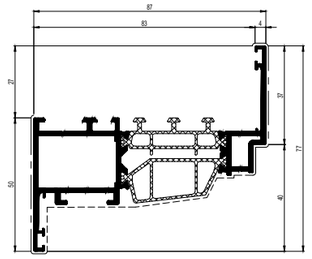

408.0192.XX
508.0192.XX HI+

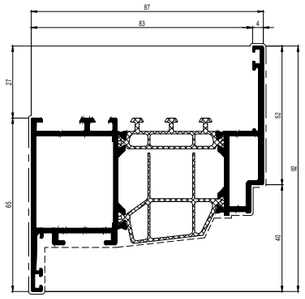

508.0592.XX HI+

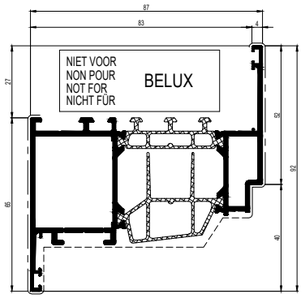

408.0266.XX

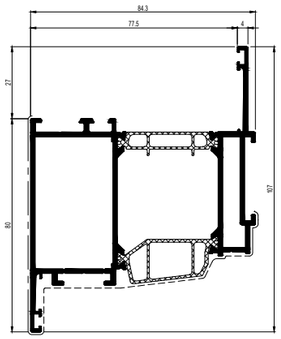

408.0112.XX
508.0112.XX HI+

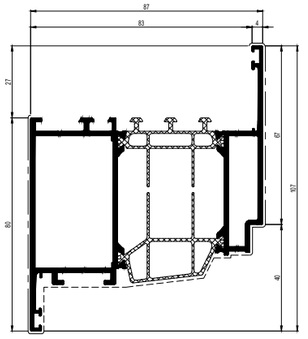

408.0501.XX
508.0501.XX HI+

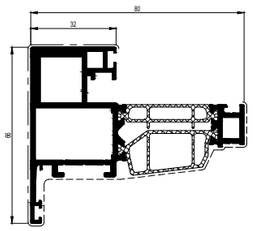

408.0502.XX
508.0502.XX HI+

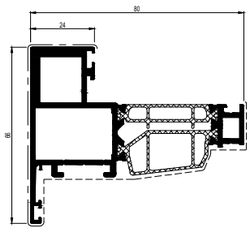

408.0503.XX
508.0503.XX HI+

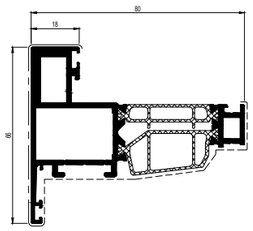

408.0504.XX
508.0504.XX HI+

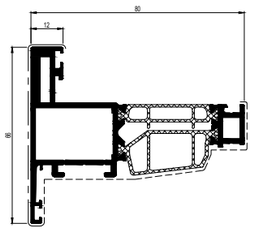

PROFILE OVERVIEW MASTERLINE 8

PROFILE OVERVIEW

MASTERLINE 8-De, MASTERLINE 8-Fu, MASTERLINE 8-HV, MASTERLINE 8-Re

408.0025.04

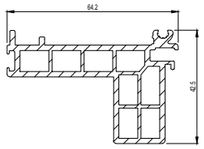

408.0044.XX

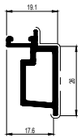

408.0045.XX

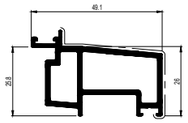

408.0046.XX

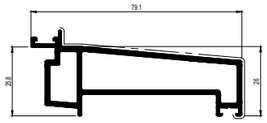

408.0047.XX

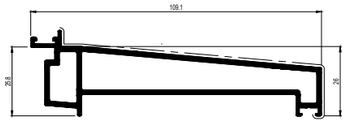

408.1023.C35



5I1.0535.XX

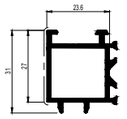

203.0050.XX

203.0049.XX

203.0048.XX

203.0047.XX

408.0145.XX
508.0145.XX HI+

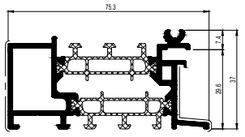

408.0146.XX
508.0146.XX HI+

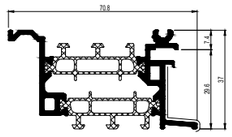

408.0147.XX

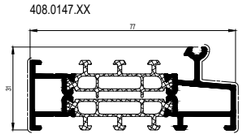

408.1025.04

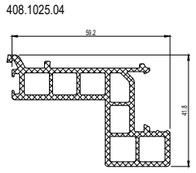

408.5045.XX

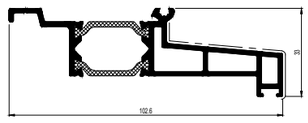

408.5046.XX

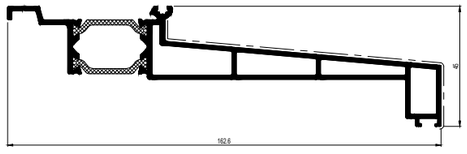

031.0070.XX

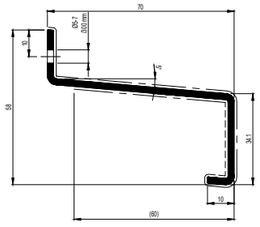

031.0090.XX

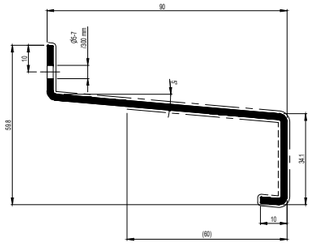

408.1024.04

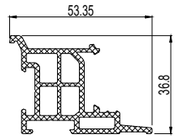

031.0300.XX

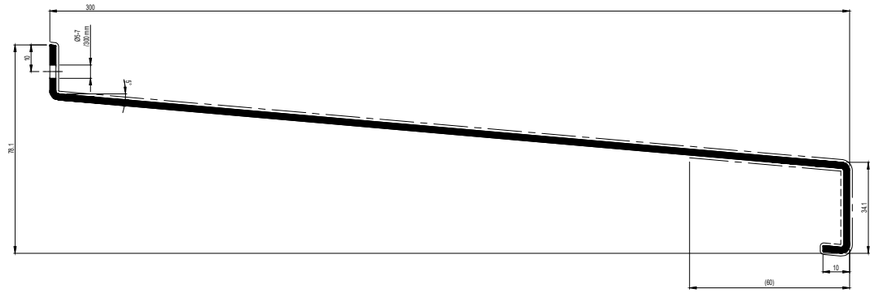

031.1050.XX

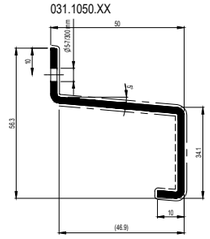

108.0035.04

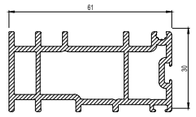

030.0454.XX

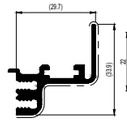

004.3130.XX

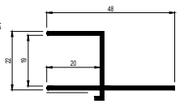

030.0451.XX

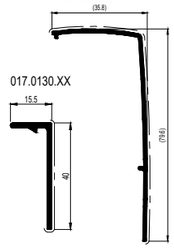

030.0453.SY



030.0452.17

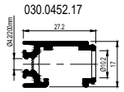

017.0130.XX

108.0009.04
HPVC

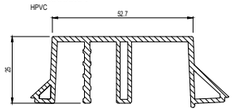

108.0083.XX



108.0084.00



408.0008.04

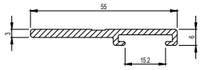

408.1535.XX

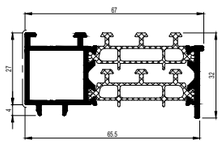

5F8.1535.XX HI+ FOAM INCLUDED

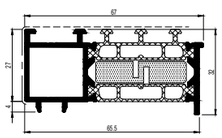

013.5109.XX

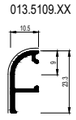

030.0130.XX

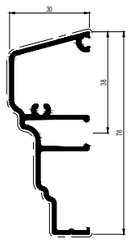

030.0131.XX

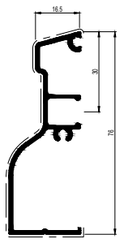

030.0132.XX

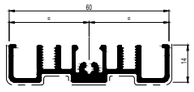

034.2051.XX

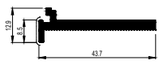

108.2835.XX

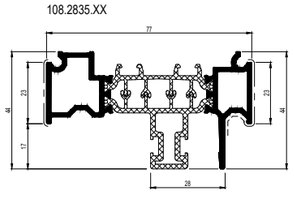

108.2836.XX

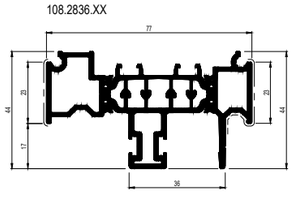

PROFILE OVERVIEW MASTERLINE 8

PROFILE OVERVIEW

MASTERLINE 8-De, MASTERLINE 8-Fu, MASTERLINE 8-HV, MASTERLINE 8-Re

408.0813.XX
508.0813.XX HI+

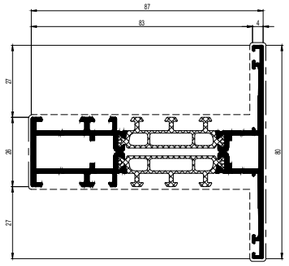

408.0820.XX
508.0820.XX HI+

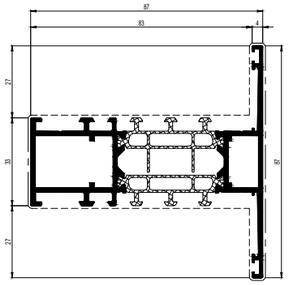

406.0350.XX

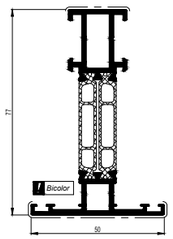

408.0113.XX L=7.00m
4K8.0113.XX L=1.30m
508.0113.XX HI+

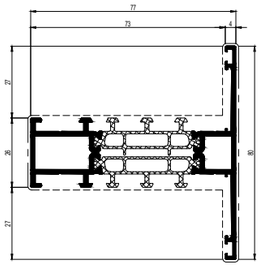

408.0120.XX L=7.00m
4K8.0120.XX L=1.30m
508.0120.XX HI+

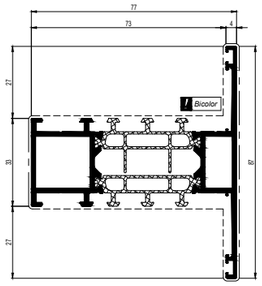

408.0165.XX
508.0165.XX HI+

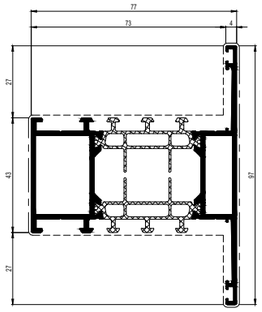

408.0114.XX L=7.00m
4K8.0114.XX L=1.30m

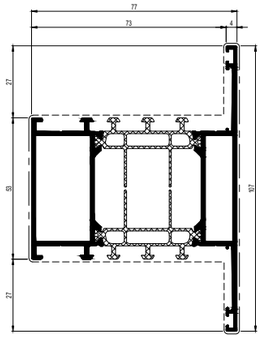

408.1850.XX L=7.00m
4K8.1850.XX L=1.30m
508.1850.XX HI+

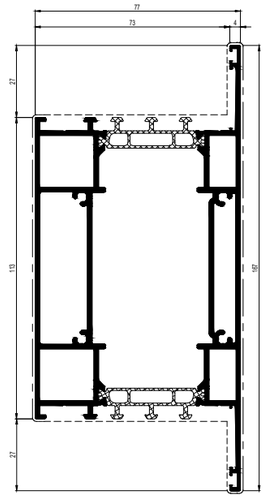

408.1851.XX L=7.00m
4K8.1851.XX L=1.30m
508.1851.XX HI+

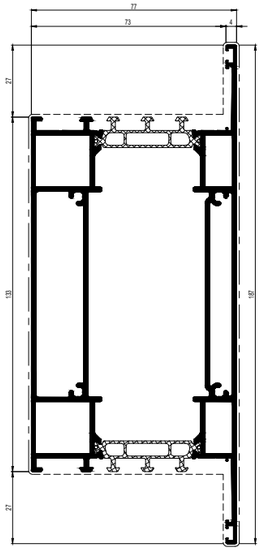

408.1852.XX L=7.00m
4K8.1852.XX L=1.30m
508.1852.XX HI+

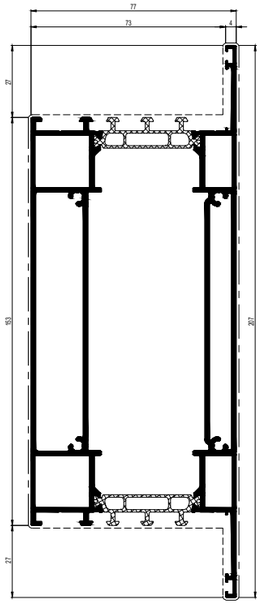

408.1853.XX L=7.00m
4K8.1853.XX L=1.30m
508.1853.XX HI+

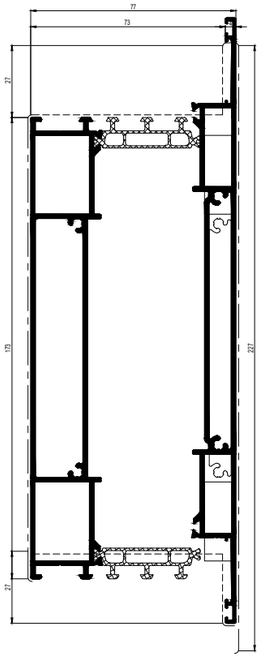

408.1854.XX L=7.00m
4K8.1854.XX L=1.30m
508.1854.XX HI+

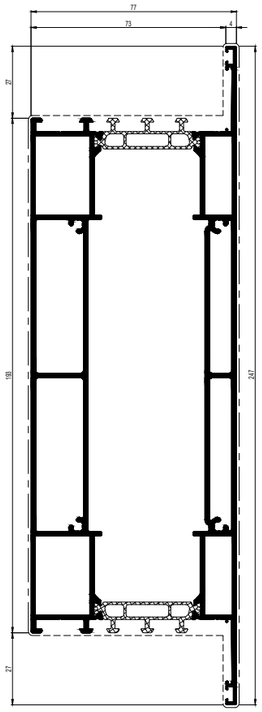

408.1855.XX L=7.00m
4K8.1855.XX L=1.30m
508.1855.XX HI+

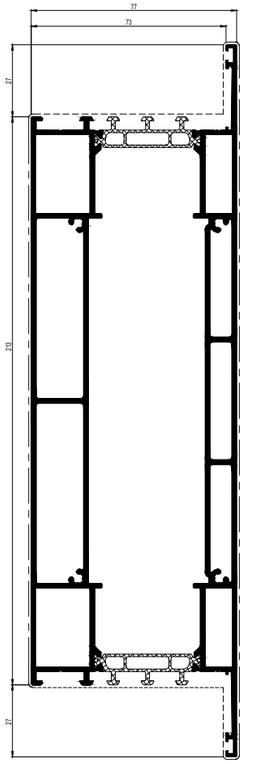

408.1856.XX L=7.00m
4K8.1856.XX L=1.30m
508.1856.XX HI+

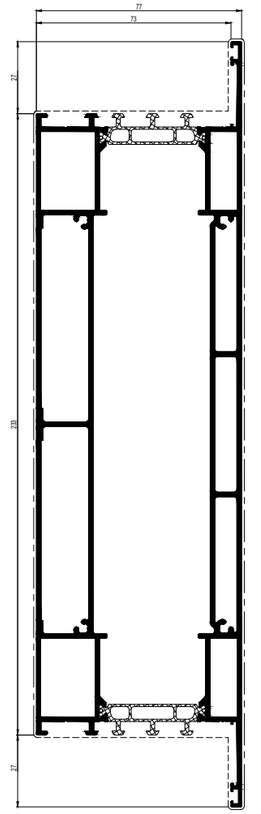

408.1123.XX
4F8.1123.XX FOAM INCLUDED
508.1123.XX HI+
5F8.1123.XX HI+ FOAM INCLUDED

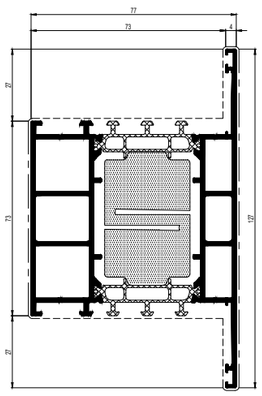

408.1116.XX
4F8.1116.XX FOAM INCLUDED
508.1116.XX HI+
5F8.1116.XX HI+ FOAM INCLUDED

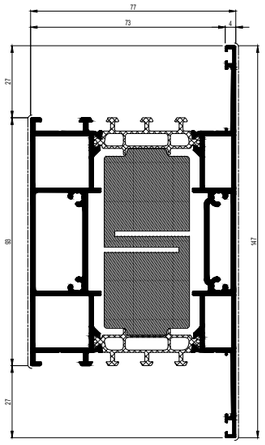

108.0712.XX

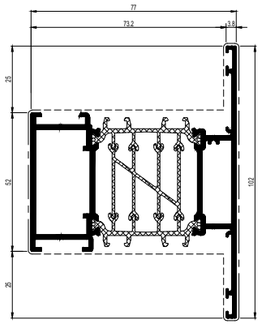

108.0792.XX

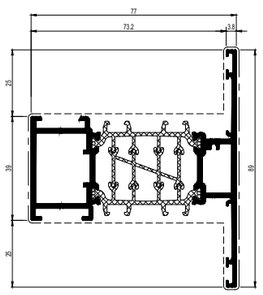

PROFILE OVERVIEW MASTERLINE 8

PROFILE OVERVIEW

MASTERLINE 8-De, MASTERLINE 8-Fu, MASTERLINE 8-HV, MASTERLINE 8-Re

408.0100.XX
508.0100.XX HI+

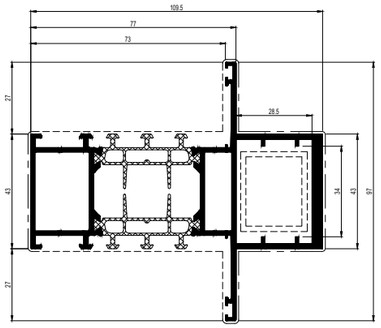

408.0109.XX
508.0109.XX

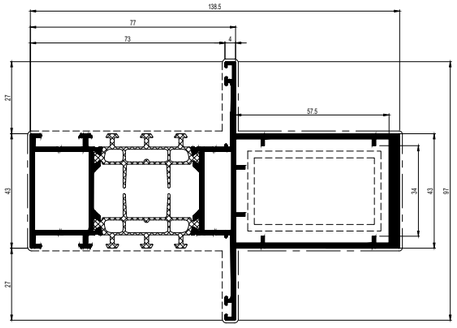

408.0110.XX
508.0110.XX HI+

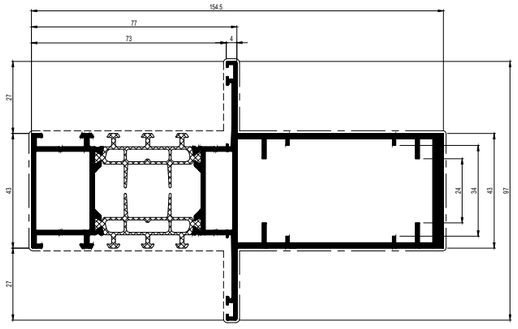

408.3100.XX
508.3100.XX HI+

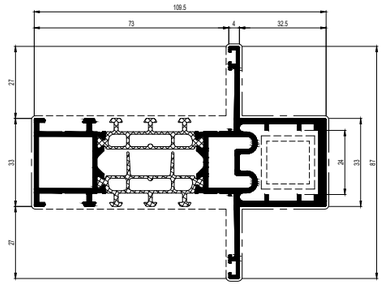

408.0815.XX
508.0815.XX HI+

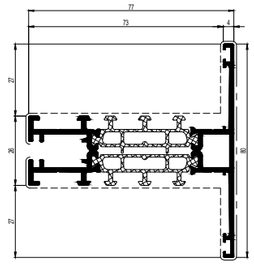

408.3109.XX
508.3109.XX HI+

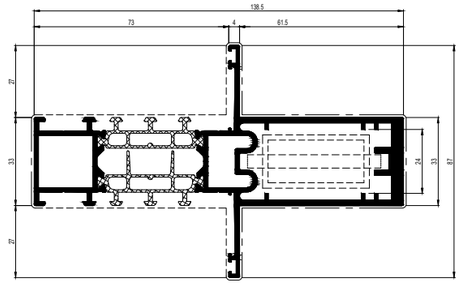

408.3110.XX
508.3110.XX HI+

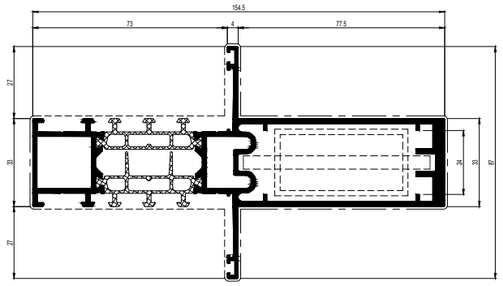

408.0117.XX
508.0117.XX HI+

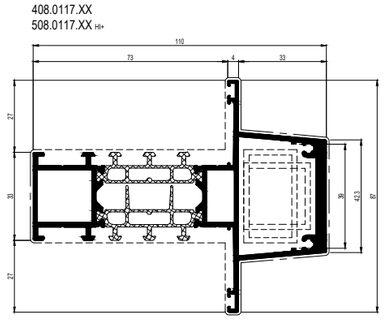

408.0119.XX
508.0119.XX HI+

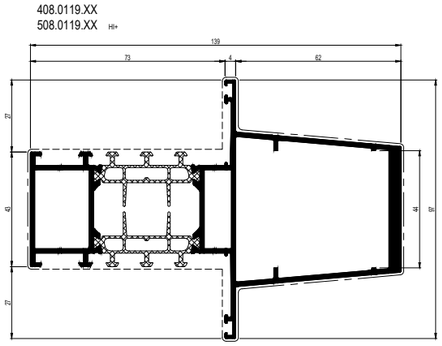

408.3180.XX
508.3180.XX HI+

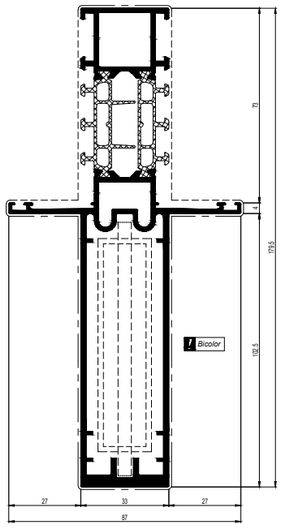

408.0108.XX
508.0108.XX HI+

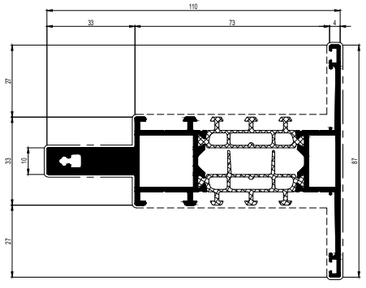

408.0118.XX
508.0118.XX HI+

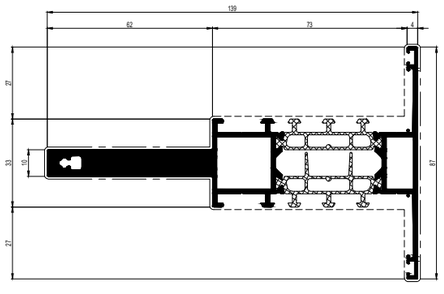

408.0111.XX
508.0111.XX HI+

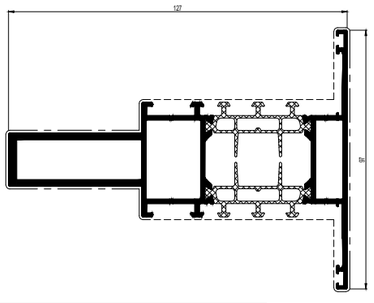

408.3111.XX

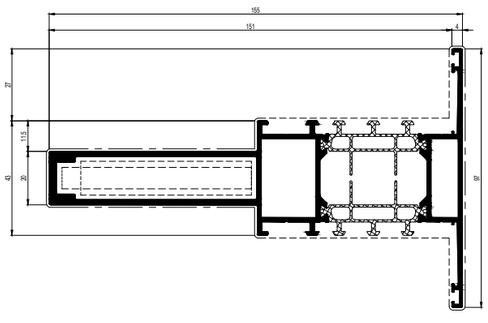

030.1096.00

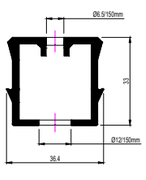

030.1097.00

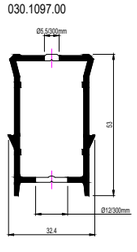

030.1098.00

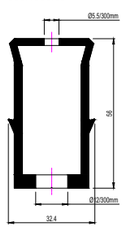

030.3095.XX

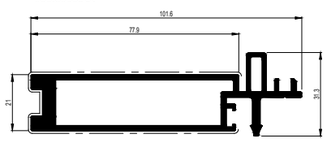

030.3097.XX

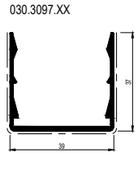

030.3876.XX

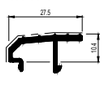

030.3877.XX

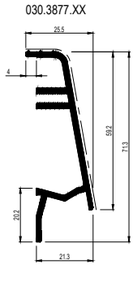

PROFILE OVERVIEW MASTERLINE 8

PROFILE OVERVIEW

MASTERLINE 8-De, MASTERLINE 8-Fu, MASTERLINE 8-HV, MASTERLINE 8-Re

408.0890.XX
508.0890.XX HI+

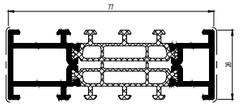

408.0892.XX
508.0892.XX HI+

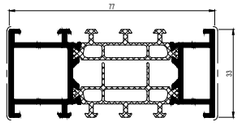

408.0894.XX
508.0894.XX HI+

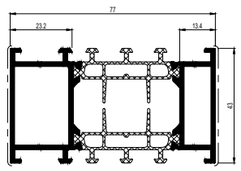

408.1896.XX
4F8.1896.XX FOAM INCLUDED
508.1896.XX HI+
5F8.1896.XX HI+ FOAM INCLUDED

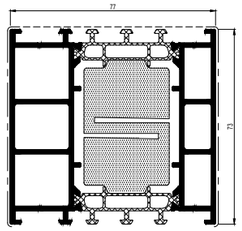

408.1891.XX
508.1891.XX HI+

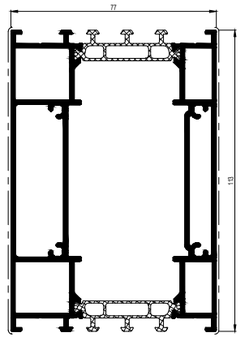

408.1004.XX
508.1004.XX HI+

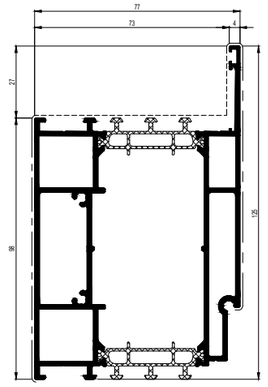

408.0170.XX
508.0170.XX HI+

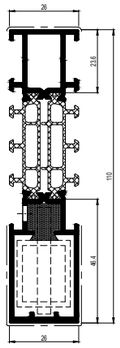

408.0170.XX
508.0170.XX HI+

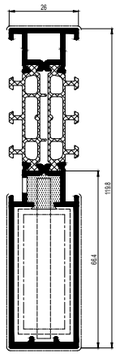

408.0179.XX
508.0179.XX HI+

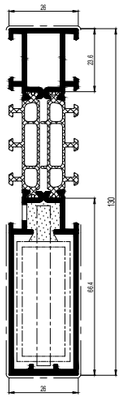

408.0172.XX
508.0172.XX HI+

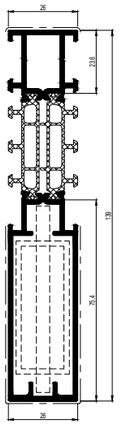

408.0173.XX
508.0173.XX HI+

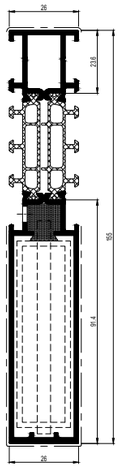

508.0180.XX HI+

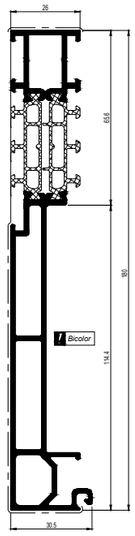

408.0174.XX
508.0174.XX HI+

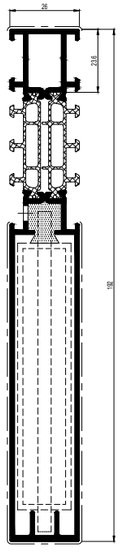

408.1535.XX

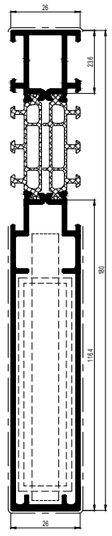

004.3168.XX

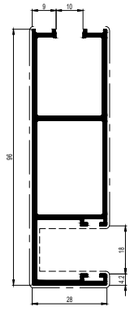

004.3130.XX

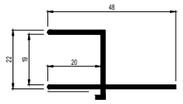

130.1143.XX

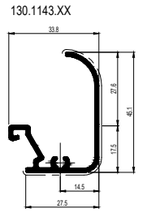

130.1147.XX

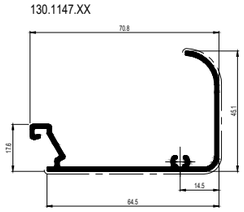

004.3167.XX

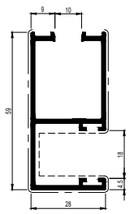

004.3843.XX

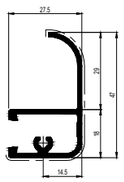

130.1142.XX

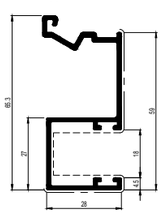

108.1132.XX

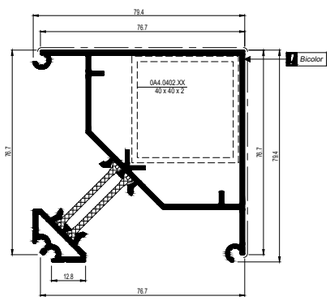

108.0018.XX Bicolor

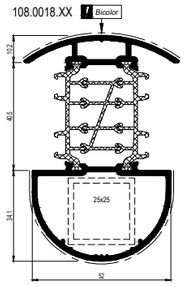

108.0178.XX

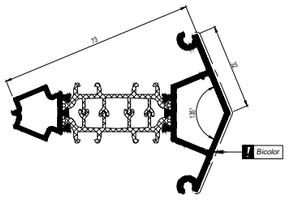

030.1050.XX



130.1051.XX

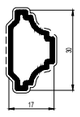

130.1053.XX

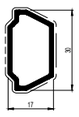

403.0250.XX



PROFILE OVERVIEW MASTERLINE 8

PROFILE OVERVIEW

MASTERLINE 8-De, MASTERLINE 8-Fu, MASTERLINE 8-HV, MASTERLINE 8-Re

013.5109.XX

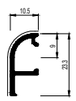

004.3846.XX

026.0119.XX

108.0085.XX

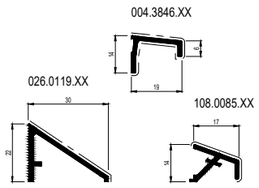

408.0052.XX

408.0053.XX

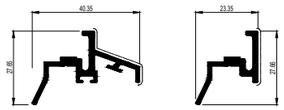

030.1158.XX

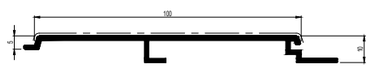

030.1159.XX

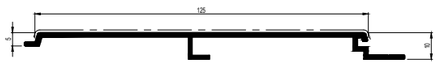

030.1160.XX

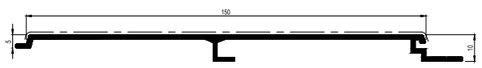

025.0056.XX



035.0104.00



025.0058.XX

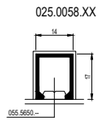

030.2140.00

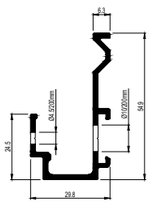

030.2141.00

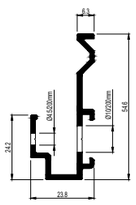

030.1112.XX

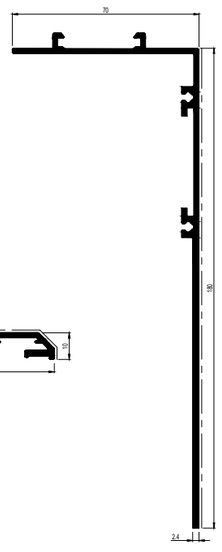

030.1121.XX

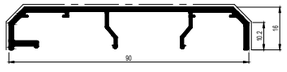

030.1120.XX

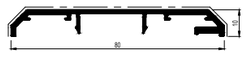

108.0082.XX

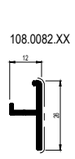

408.0082.XX

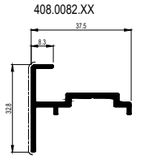

130.1150.04

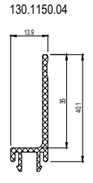

130.1151.04

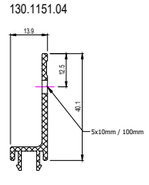

004.3328.XX

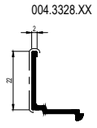

130.3645.XX

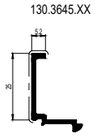

130.3646.XX

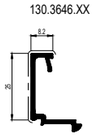

030.3200.XX

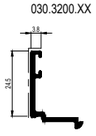

030.3607.XX

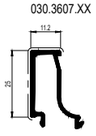

030.3608.XX

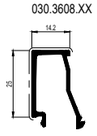

030.3609.XX

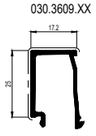

030.3610.XX

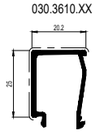

030.3611.XX

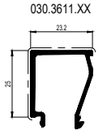

030.3612.XX

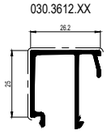

030.3613.XX

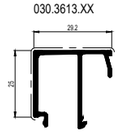

030.3614.XX

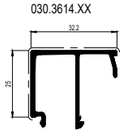

030.3615.XX

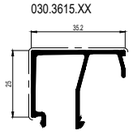

030.3616.XX

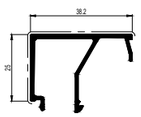

030.3617.XX

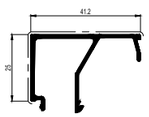

030.3618.XX

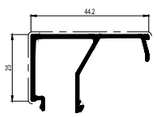

030.3619.XX

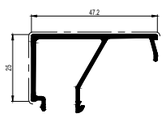

030.3620.XX

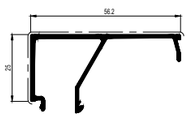

030.3622.XX

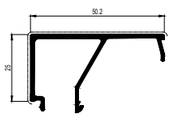

030.3623.XX

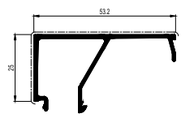

408.0549.XX

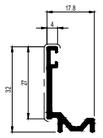

030.3647.XX

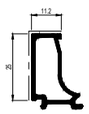

030.3649.XX

030.3651.XX

030.3652.XX

030.3656.XX

030.3669.XX

130.3647.XX

130.3648.XX

130.3649.XX

130.3650.XX

130.3651.XX

130.3652.XX

130.3653.XX

130.3654.XX

130.3655.XX

130.3656.XX

130.3657.XX

130.3658.XX

130.3659.XX

130.3664.XX

130.3665.XX

130.3666.XX

130.3647.XX

130.3668.XX

130.3669.XX

130.3670.XX

130.3671.XX

130.3672.XX

130.3673.XX

130.3674.XX

PROFILE OVERVIEW MASTERLINE 8

PROFILE OVERVIEW

MASTERLINE 8-De, MASTERLINE 8-Fu, MASTERLINE 8-HV, MASTERLINE 8-Re

408.0701.XX
508.0701.XX HI+

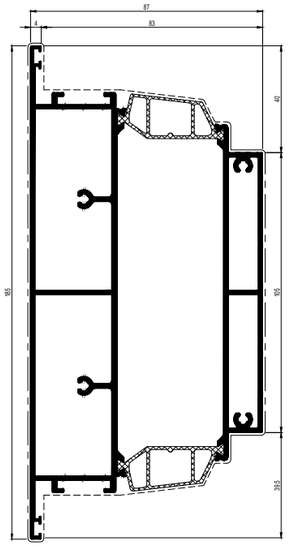

408.0703.XX
508.0703.XX HI+

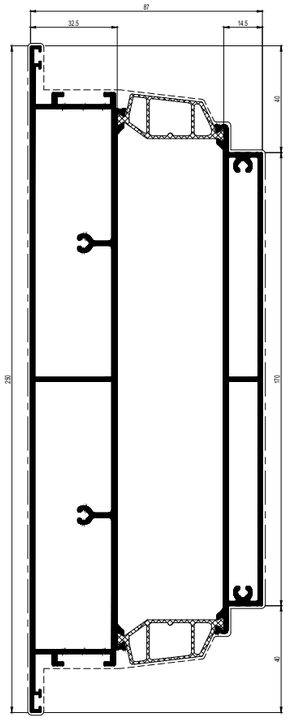

108.0030.XX

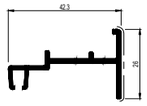

108.0080.XX

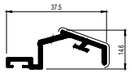

108.0081.XX



108.0090.XX



408.0049.XX



108.0086.XX



408.0052.XX

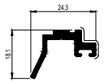

030.0450.AN

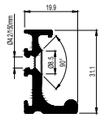

408.0086.XX

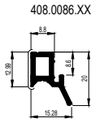

030.0029.XX

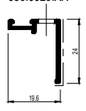

108.0065.XX

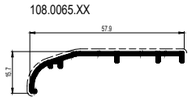

408.0830.04

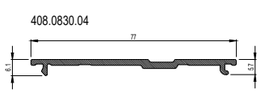

408.0833.AN

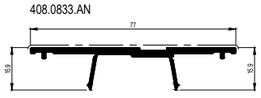

408.0834.AN

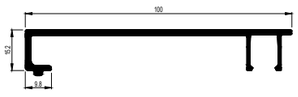

408.0899.AN

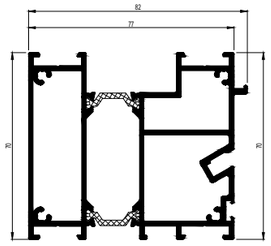

408.0835.AN

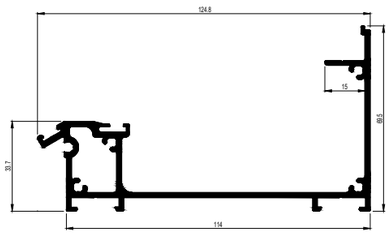

108.0071.XX

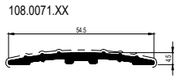

108.1873.XX

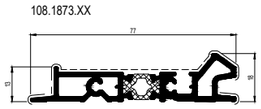

108.1874.XX

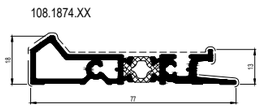

408.0071.XX



408.0771.XX

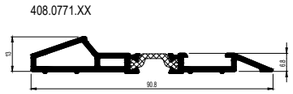

408.0866.XX

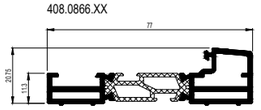

408.0875.XX

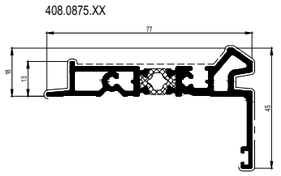

408.0876.XX

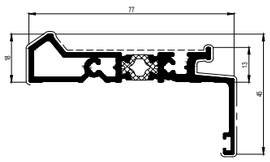

408.0975.XX

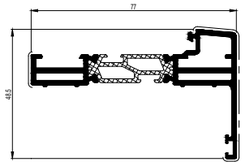

408.1860.XX

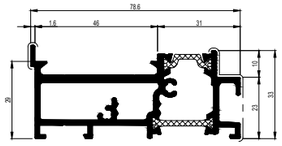

408.1866.XX

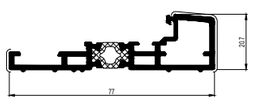

408.1975.XX

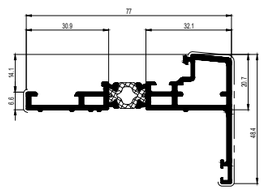

408.1976.XX

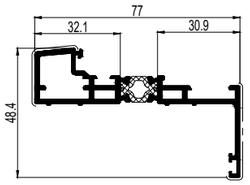

PROFILE OVERVIEW MASTERLINE 8

PROFILE OVERVIEW

MASTERLINE 8-De, MASTERLINE 8-Fu, MASTERLINE 8-HV, MASTERLINE 8-Re

408.0569.XX

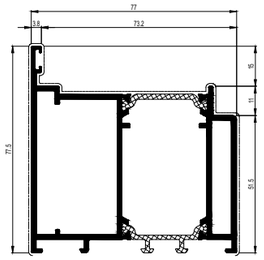

408.0598.XX

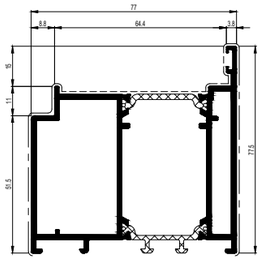

408.1069.XX

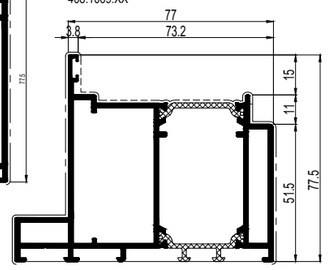

408.0669.XX

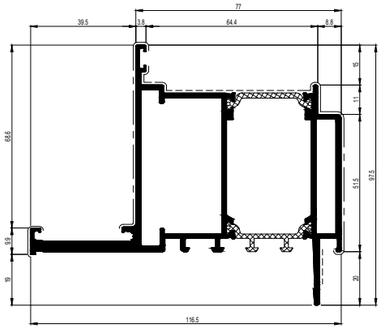

408.0798.XX

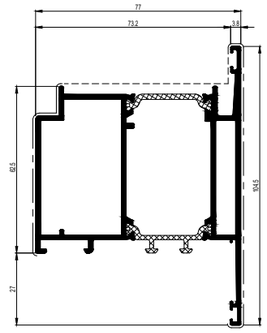

408.0698.XX

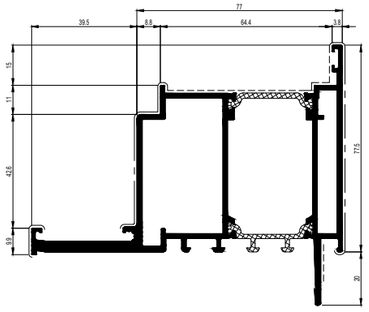

408.0769.XX

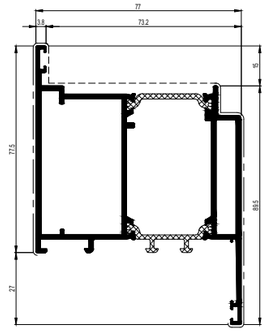

408.0869.XX

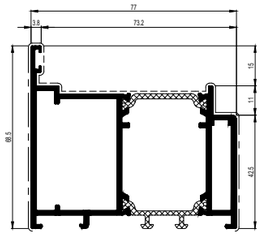

408.0898.XX

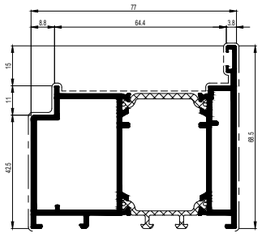

408.0469.XX

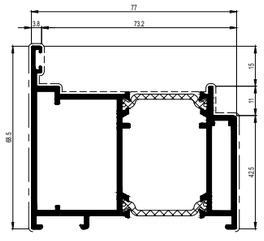

408.0498.XX

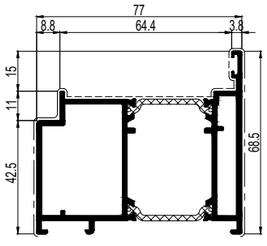

408.1098.XX

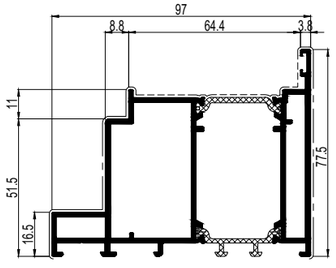

408.0827.04

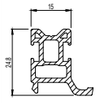

408.0824.XX

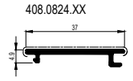

408.0029.XX

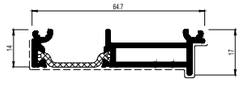

408.1028.XX

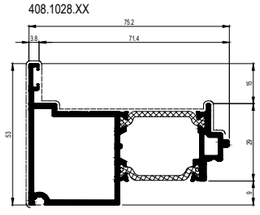

408.0016.XX

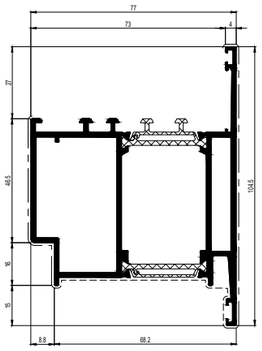

408.0014.XX

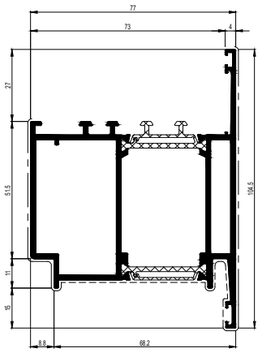

408.0026.XX

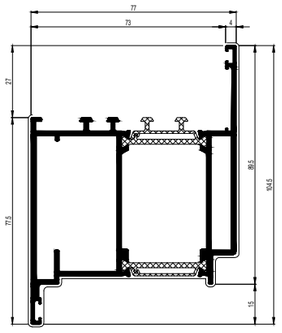

408.0094.XX

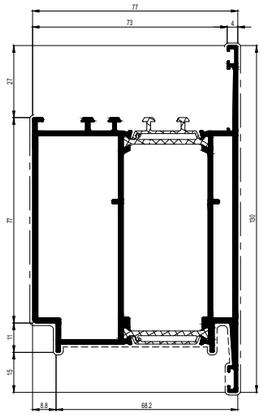

408.0096.XX

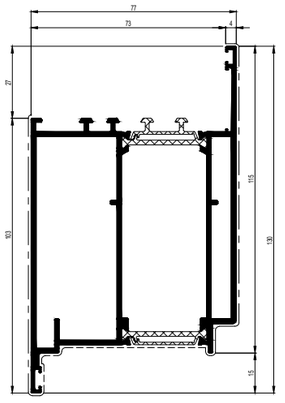

408.0720.XX

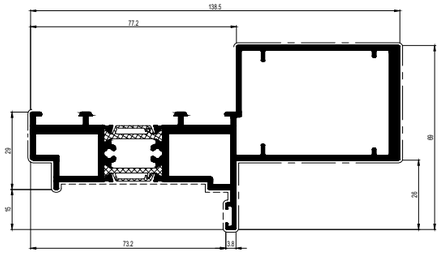

408.0226.XX

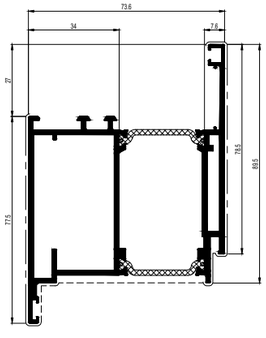

408.0214.XX

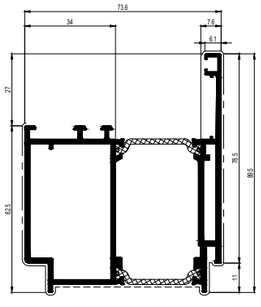

408.0224.XX

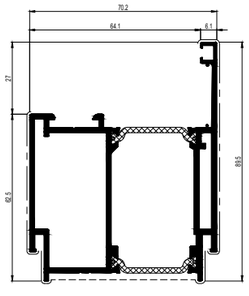

408.1314.XX

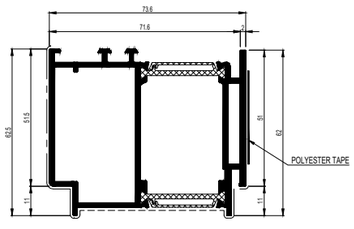

DE TAPE NIET VERWIJDEREN VOOR DE OPPERVLAKTE BEHANDELING!
NE PAS RETIRER LA BANDE POUR LE TRAITEMENT DE SURFACE!
DO NOT REMOVE THE TAPE FOR THE SURFACE TREATMENT!
NICHT DAS BAND VOR DER OBERFLÄCHENBEHANDLUNG ENTFERMEN!

408.1316.XX

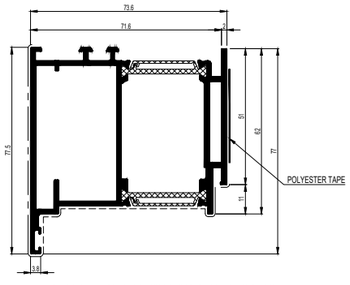

DE TAPE NIET VERWIJDEREN VOOR DE OPPERVLAKTE BEHANDELING!
NE PAS RETIRER LA BANDE POUR LE TRAITEMENT DE SURFACE!
DO NOT REMOVE THE TAPE FOR THE SURFACE TREATMENT!
NICHT DAS BAND VOR DER OBERFLÄCHENBEHANDLUNG ENTFERMEN!

408.1334.XX

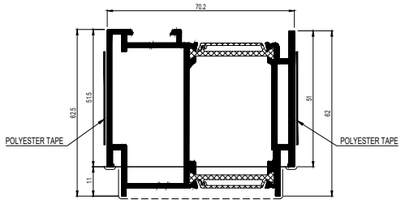

DE TAPE NIET VERWIJDEREN VOOR DE OPPERVLAKTE BEHANDELING!
NE PAS RETIRER LA BANDE POUR LE TRAITEMENT DE SURFACE!
DO NOT REMOVE THE TAPE FOR THE SURFACE TREATMENT!
NICHT DAS BAND VOR DER OBERFLÄCHENBEHANDLUNG ENTFERMEN!

PROFILE OVERVIEW MASTERLINE 8

PROFILE OVERVIEW

MASTERLINE 8-De, MASTERLINE 8-Fu, MASTERLINE 8-HV, MASTERLINE 8-Re

408.0010.XX L=7.00m
4K8.0010.XX L=1.30m

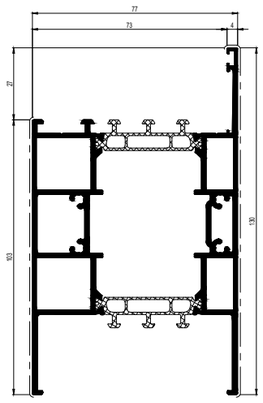

408.0011.XX L=7.00m
4K8.0011.XX L=1.30m

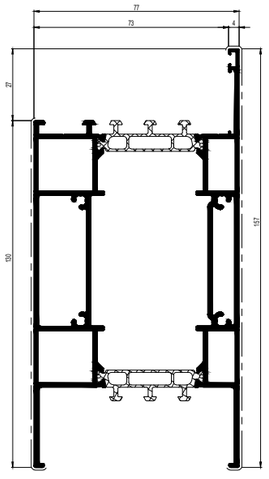

408.1790.XX

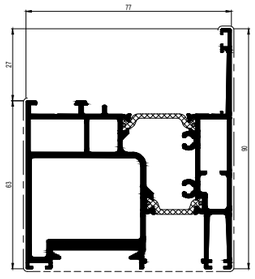

408.0715.XX

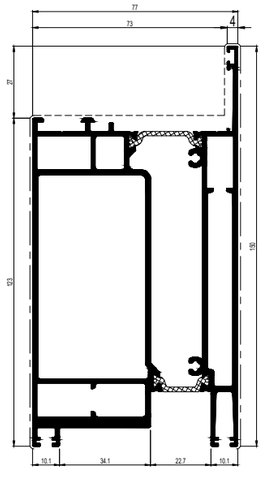

408.0148.XX

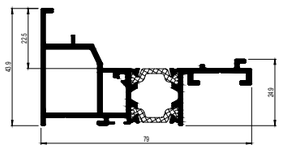

408.1151.XX

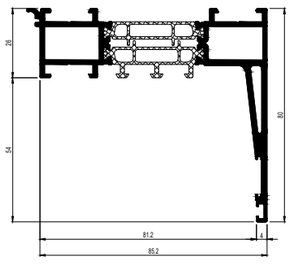

408.3148.XX

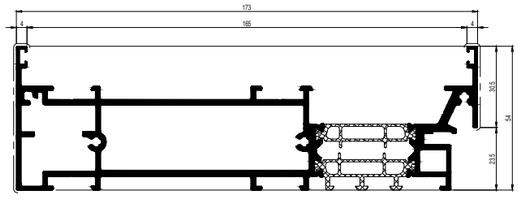

408.0148.XX

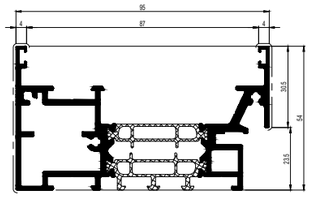

408.1813.XX

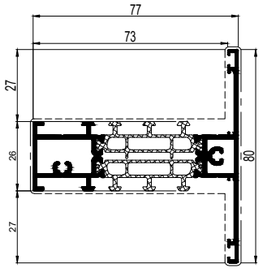

408.1820.XX

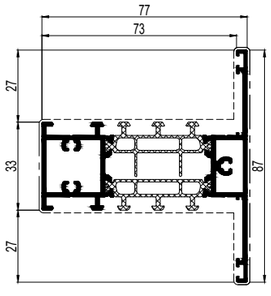

408.1865.XX

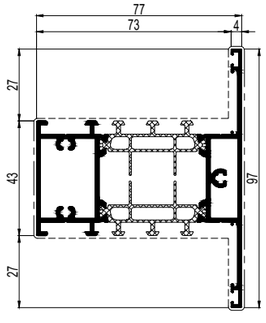

408.1814.XX

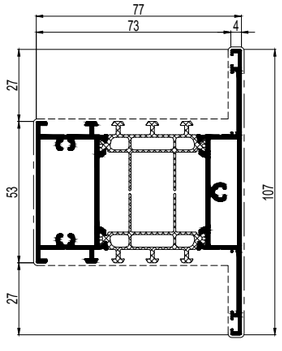

408.2123.XX

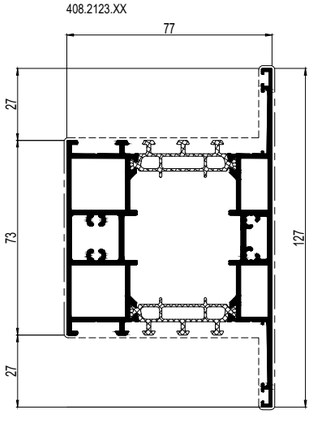

PROFILE OVERVIEW MASTERLINE 8

PROFILE OVERVIEW

MASTERLINE 8-De, MASTERLINE 8-Fu, MASTERLINE 8-HV, MASTERLINE 8-Re

408.0236.XX
508.0236.XX HI+

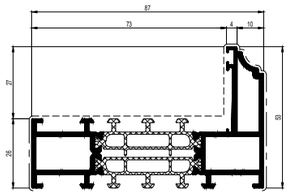

408.0283.XX
508.0283.XX

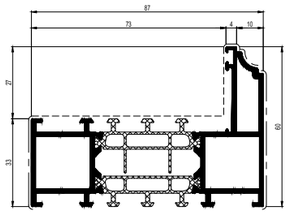

408.0202.XX
508.0202.XX HI+

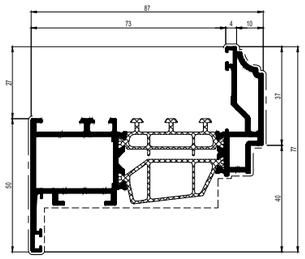

408.0292.XX
508.0292.XX HI+

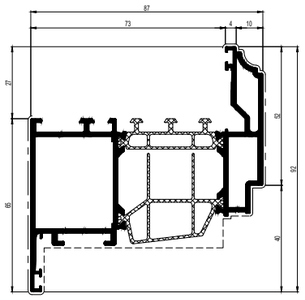

408.0212.XX
508.0212.XX HI+

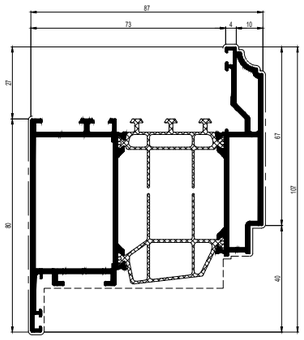

408.1251.XX
4F8.1251.XX FOAM INCLUDED
508.1251.XX HI+
5F8.1251.XX HI+ FOAM INCLUDED

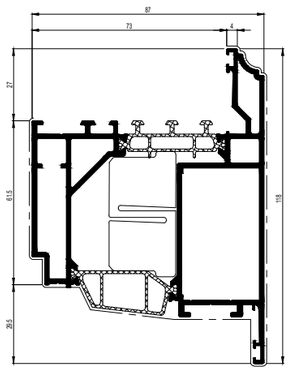

408.0213.XX
508.0213.XX HI+

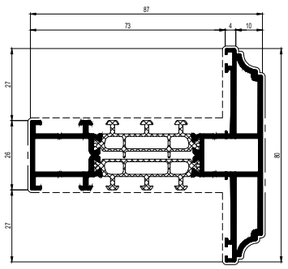

408.0220.XX
508.0220.XX HI+

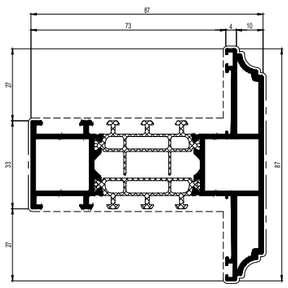

408.0245.XX
508.0245.XX HI+

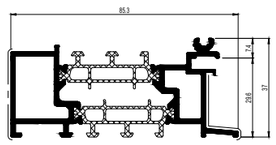

408.0246.XX
508.0246.XX HI+

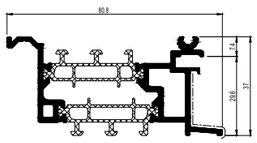

001.0215.XX

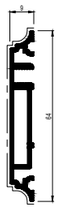

ENDSTUK
BOUCHON PIECE FINALE 069.6702.04
END PART
ENDKAPPE 2 x 069.6648.XX

408.0215.XX



ENDSTUK
BOUCHON PIECE FINALE 169.6897.SY
END PART
ENDKAPPE 2 x 169.6215.04

130.0200.XX

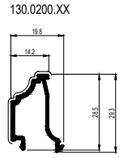

130.0203.XX

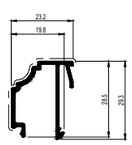

130.0206.XX

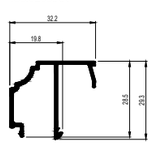

PROFILE OVERVIEW MASTERLINE 8

PROFILE OVERVIEW

MASTERLINE 8-De, MASTERLINE 8-Fu, MASTERLINE 8-HV, MASTERLINE 8-Re

408.0936.XX
508.0936.XX HI+

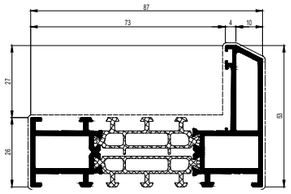

408.0983.XX
508.0983.XX HI+

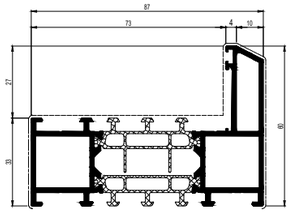

408.0902.XX
508.0902.XX HI+

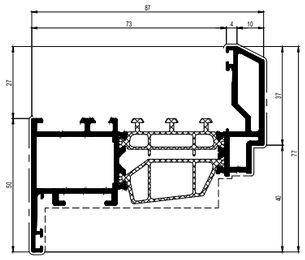

408.0992.XX
508.0992.XX HI+

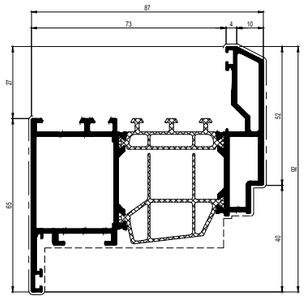

408.0912.XX
508.0912.XX HI+

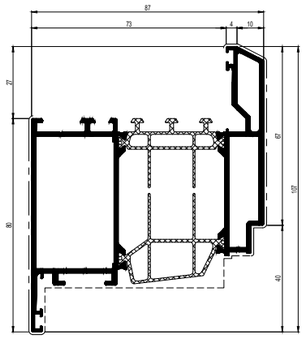

408.1951.XX

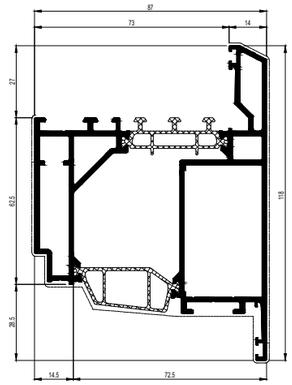

408.1951.XX
4F8.1951.XX FOAM INCLUDED
508.1951.XX HI+
5F8.1951.XX HI+ FOAM INCLUDED

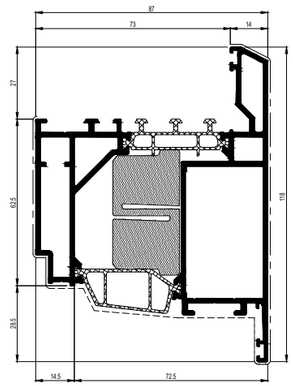

408.0913.XX
508.0913.XX HI+

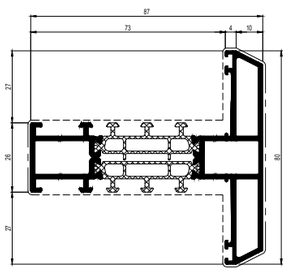

408.0920.XX
508.0920.XX HI+

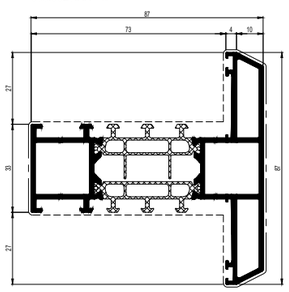

408.0245.XX
508.0245.XX HI+

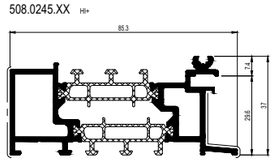

408.0246.XX
508.0246.XX HI+

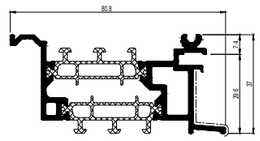

408.0915.XX

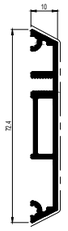

PROFILE OVERVIEW MASTERLINE 8

PROFILE OVERVIEW

MASTERLINE 8-De, MASTERLINE 8-Fu, MASTERLINE 8-HV, MASTERLINE 8-Re

408.0536.XX
508.0536.XX HI+

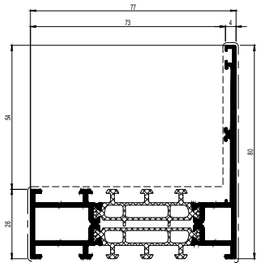

408.0584.XX
508.0584.XX HI+

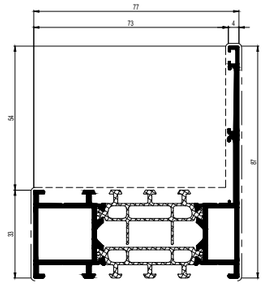

408.0544.XX
508.0544.XX HI+

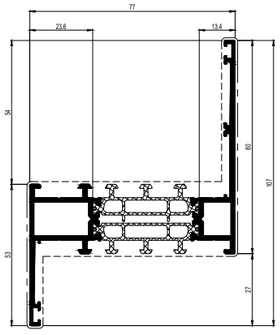

408.0538.XX
508.0538.XX HI+

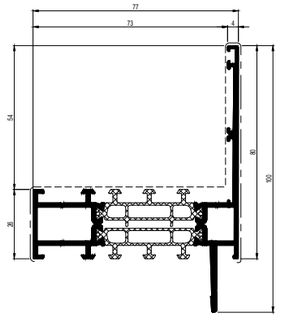

408.0539.XX
508.0539.XX HI+

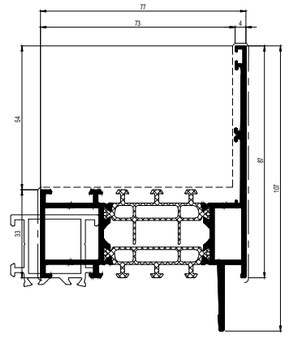

408.0501.XX
508.0501.XX HI+

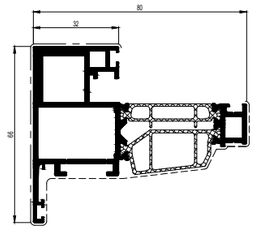

408.0502.XX
508.0502.XX HI+

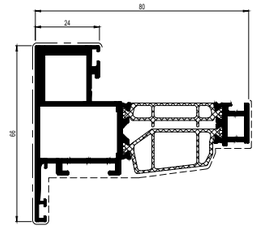

408.0503.XX
508.0503.XX HI+

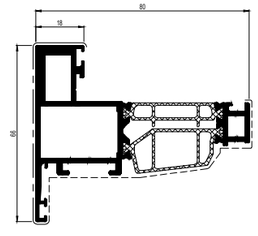

408.0504.XX
508.0504.XX HI+

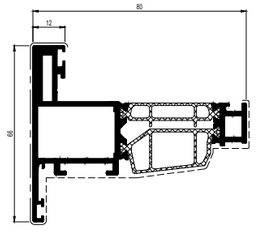

408.0510.XX

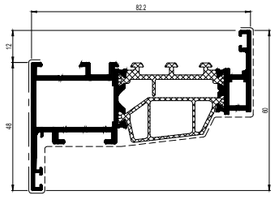

408.0505.XX
508.0505.XX HI+

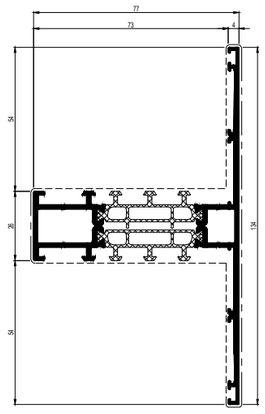

408.0506.XX
508.0506.XX HI+

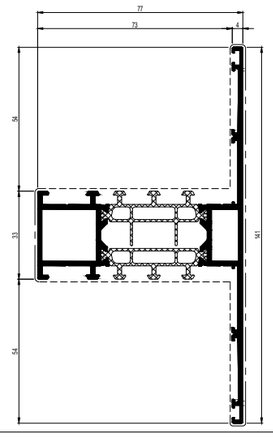

408.0513.XX
508.0513.XX HI+

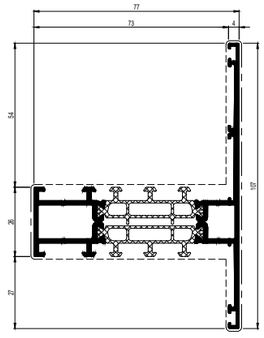

408.0520.XX
508.0520.XX HI+

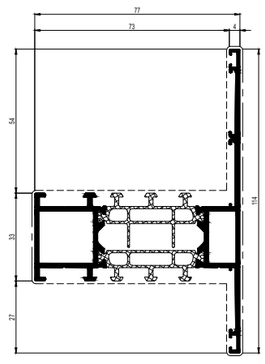

408.1515.XX
508.1515.XX HI+

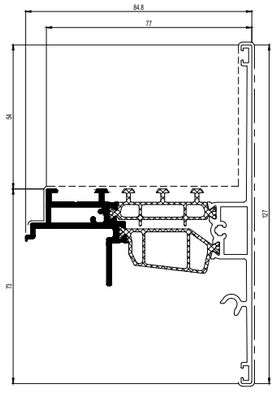

408.1545.XX

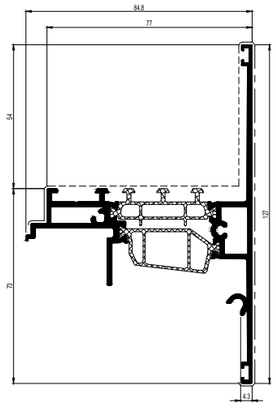

408.0582.XX
508.0582.XX HI+

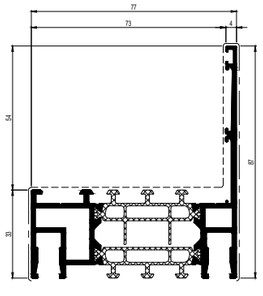

408.1535.XX

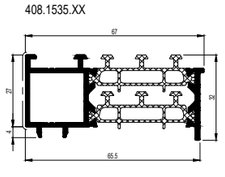

130.1533.XX



002.0673.XX



002.0674.XX



002.0675.XX



002.0682.XX



002.0693.XX

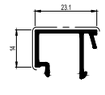

002.0683.XX

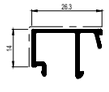

002.0687.XX

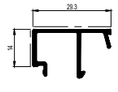

002.0686.XX

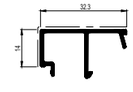

002.0688.XX

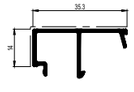

130.3546.XX

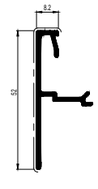

130.3550.XX

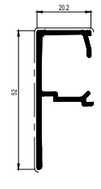

"HI"-VERSION SHOWING IN ALL E-PAGES (*)

WI Fu ST HI* HI+

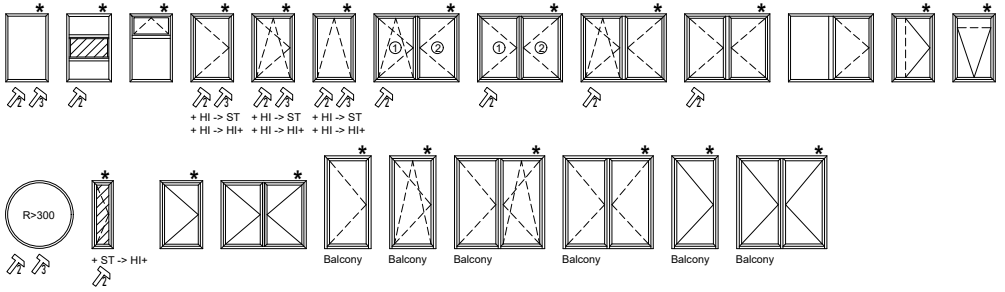

Re ST HI* HI+

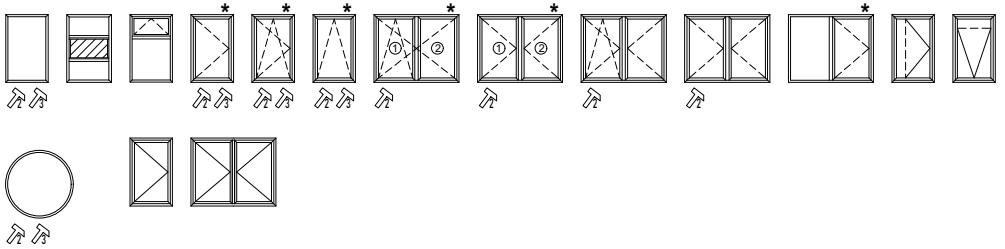

De ST HI* HI+

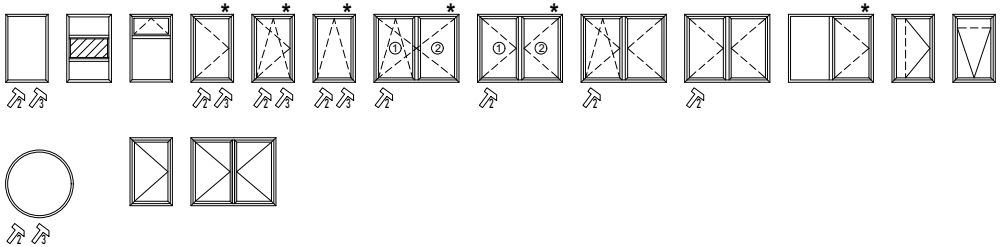

HV OG ST HI* HI+

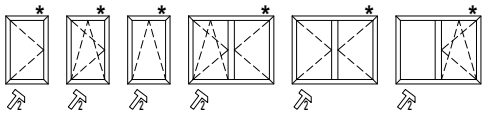

HV IG ST HI*

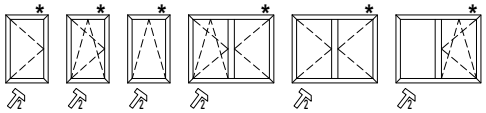

"HI"-VERSION SHOWING IN ALL E-PAGES (*)

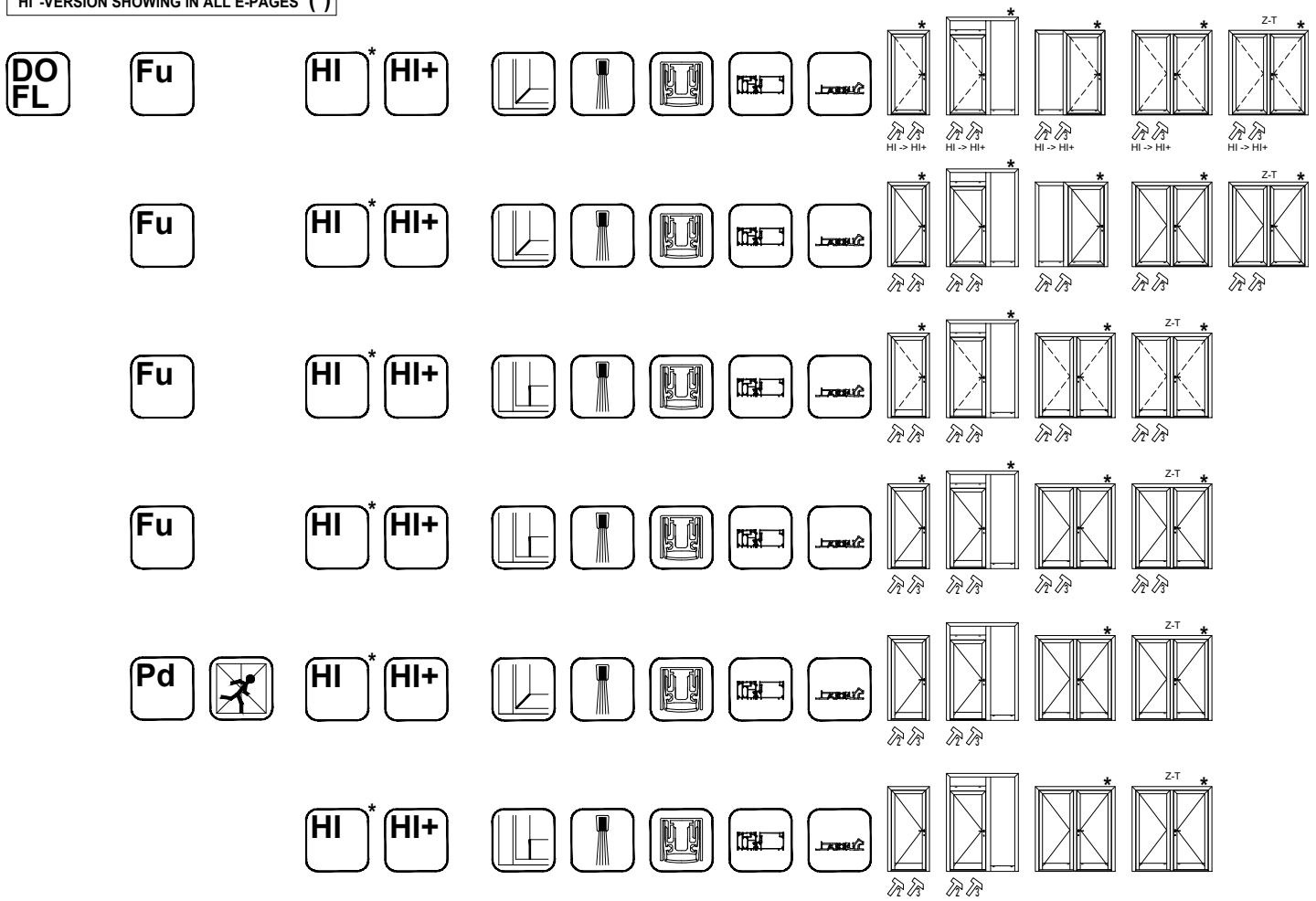

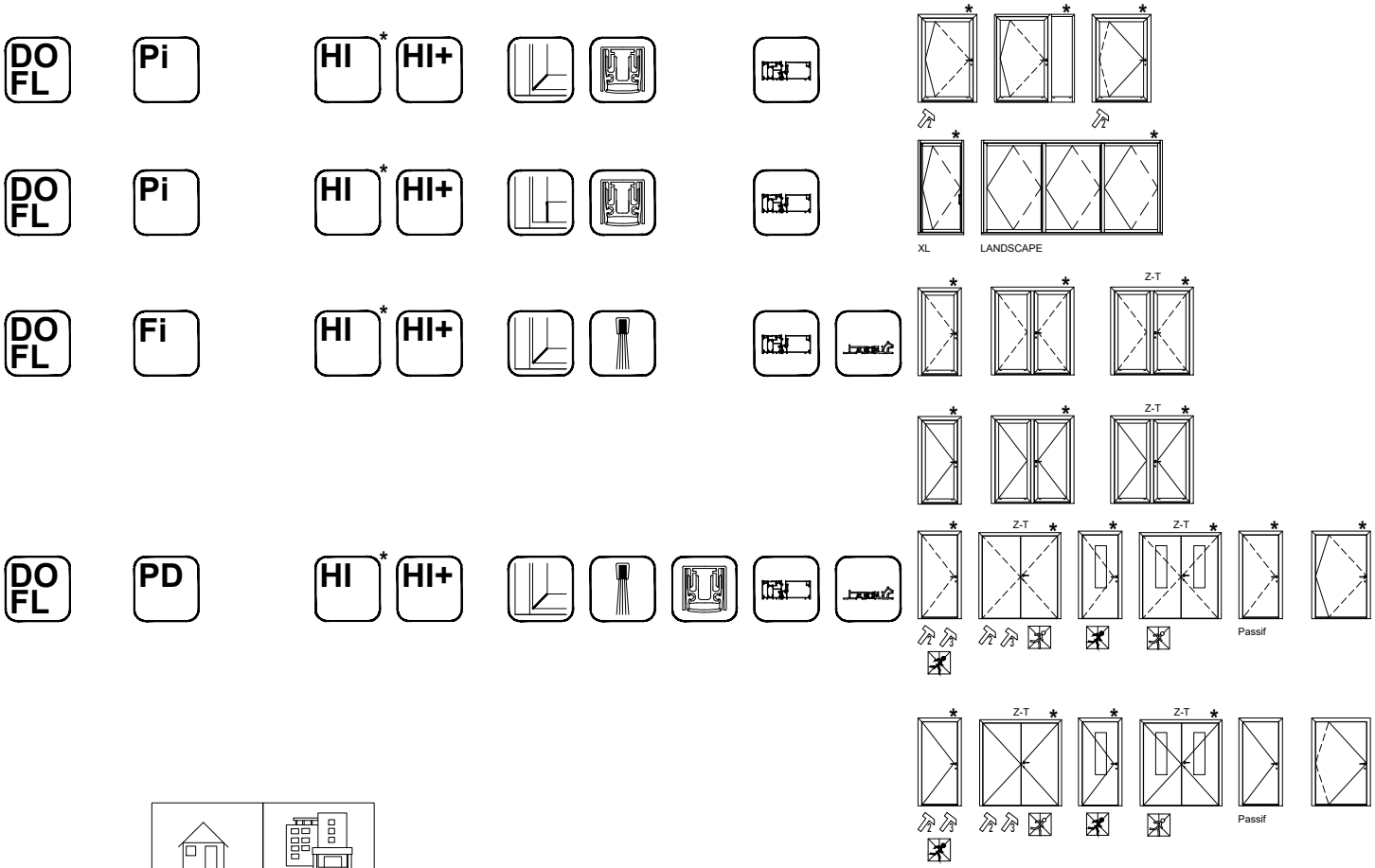

	PRIVATE PLAATSEN LIEUX PRIVATS PRIVATE APPLICATION PRIVATANWENDUNG	PUBLIEKE PLAATSEN LIEUX PUBLICS PUBLIC APPLICATION OFFENLICHE ANWENDUNG
FG < 200 kg	standard glass support NR. 169.8748.04	HID glass support NR. 169.8718.00
200 kg < FG < 250 kg	HID glass support NR. 169.8718.00	HID glass support NR. 169.8718.00

"HI"-VERSION SHOWING IN ALL E-PAGES (*)

"HI"-VERSION SHOWING IN ALL E-PAGES (*)

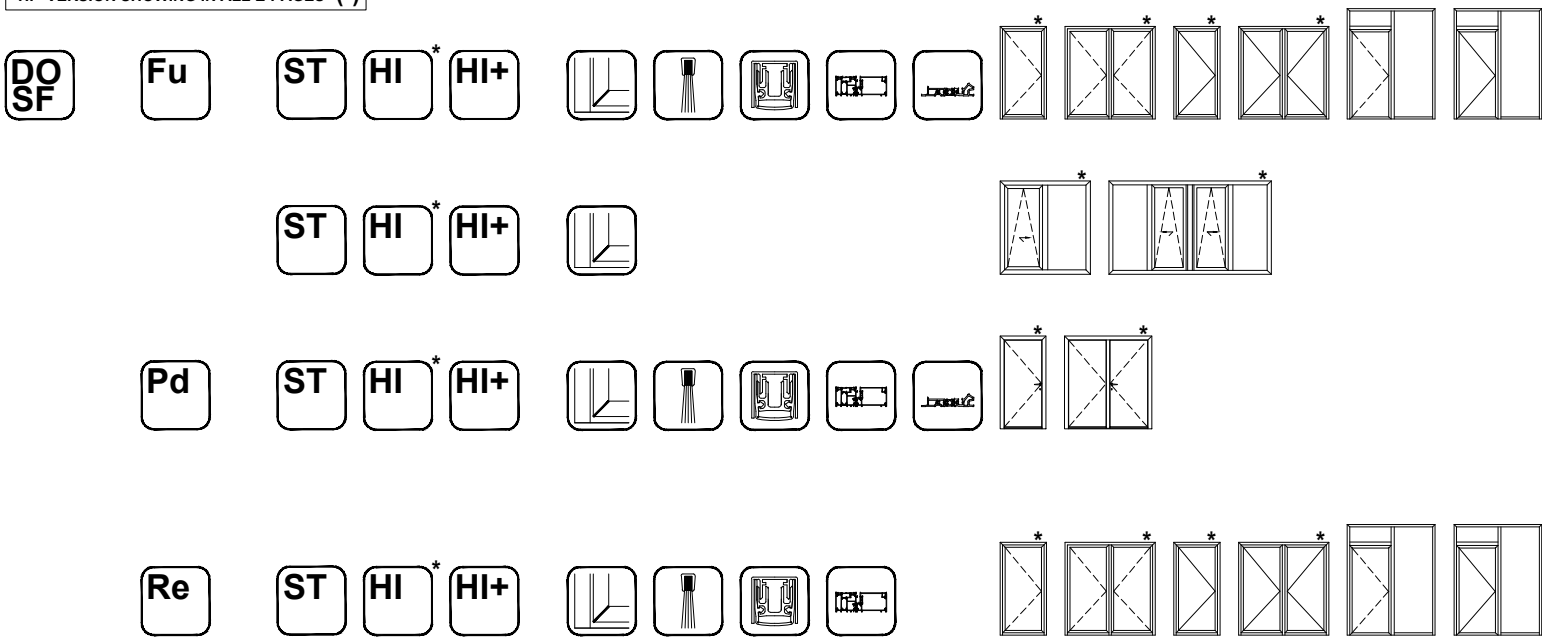

SECTIONS MASTERLINE 8-Fu

FIXED WINDOW

MASTERLINE 8-Fu

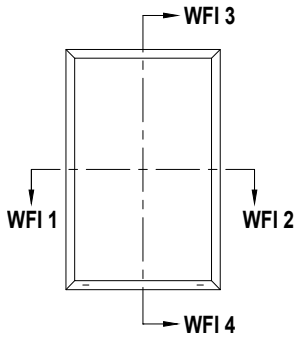

			#	Lm
408.0183.XX			2	B
			2	H
030.3610.XX			2	B - 66
			2	H - 116

168.7002.00		4
168.8002.00		4
160.8750.--		4
169.8748.04		PROD STEPS
069.6831.XX		PROD STEPS
180.9630.07		(2xB) + (2xH)
080.9125.04		(2xb) + (2xh)
180.9114.SY		(2xb) + (2xh)

b = B - 82
h = H - 82

ZIE BEGLAZINGSMETHODE
VOIR METHODE DE VITRAGE
SEE GLAZING METHOD
ZIE VERGLASUNGSWEISE

RAAMBESLAG › ZIE HARDWARE CONFIGURATOR
ACCESSOIRES FENETRES › VOIRE HARDWARE CONFIGURATOR
WINDOW GEAR › SEE HARDWARE CONFIGURATOR
FENSTERBESCHLAG › SIEHE HARDWARE CONFIGURATOR

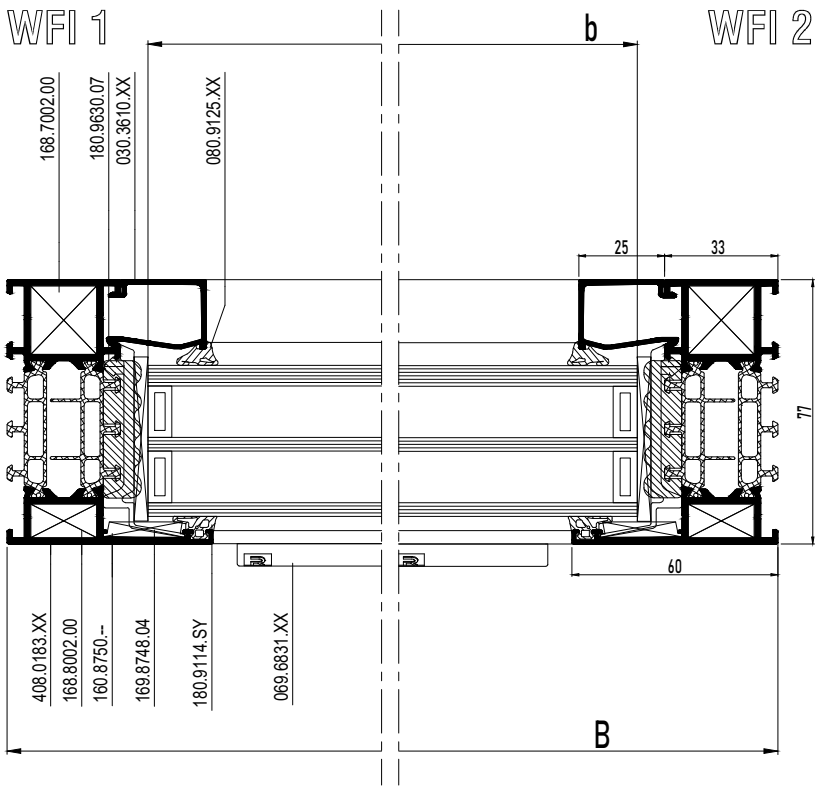

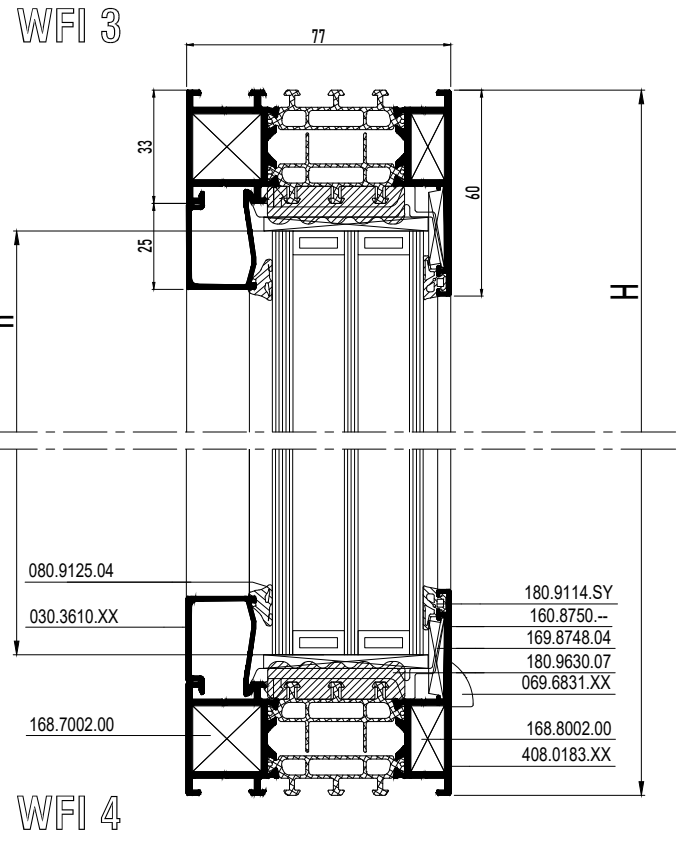

SECTIONS MASTERLINE 8-Fu

FIXED WINDOW

MASTERLINE 8-Fu

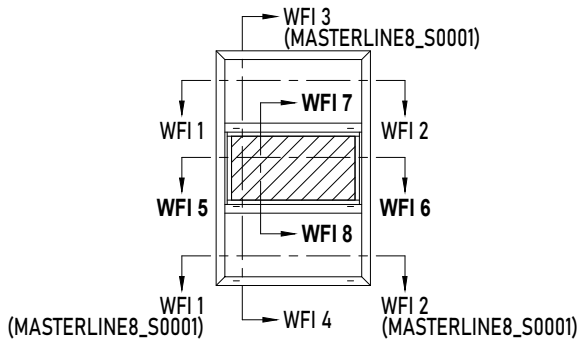

			#	Lm
408.0183.XX			2	B
			2	H
408.4001.XX			2	H2 - 33
408.0443.XX			2	B - 66
030.3610.XX			4	B - 66
			2	H1 - 99.5
			2	H3 - 99.5
030.3606.XX			2	B - 138
			2	H2 - 83

b1 = B - 82
h1 = H1 - 65.5
b2 = B - 146
h2 = H2 - 41
h3 = H3 - 65.5

45mm
ZIE BEGLAZINGSMETHODE
VOIR METHODE DE VITRAGE
SEE GLAZING METHOD
ZIE VERGLASUNGSWEISE

		#
168.7002.00		4
168.8002.00		4
160.8750.--		12
168.8712.00		4
168.8690.04		8
160.8750.--		PROD STEPS
069.6831.XX		PROD STEPS
180.9630.07		4xb +
		+ 2xh1 + 2xh3
080.9125.SY		(4xb1)+(2xh1)
		+ (2xh3)
080.9114.SY		(4xb1)+(2xh1)
		+ (2xh3)
180.9118.04		(2xb2) + (2xh2)
080.9126.SY		(2xb2) + (2xh2)
080.9381.04		4 x H2
180.9018.04		2
052.5315.--		1/300mm
052.5329.--		1/300mm

RAAMBESLAG > ZIE "HARDWARE CONFIGURATOR"
ACCESSOIRES FENETRES > VOIRE "HARDWARE CONFIGURATOR"
WINDOW GEAR > HARDWARE CONFIGURATOR"
FENSTERBESCHLAG > SIEHE "HARDWARE CONFIGURATOR"

WFI 5

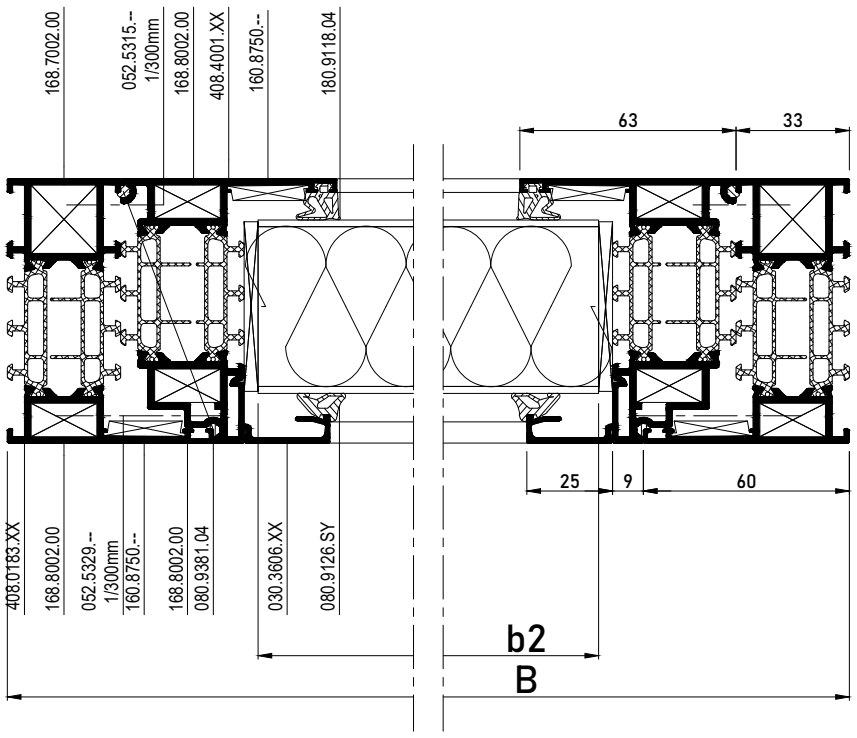

WFI 6

WFI 7

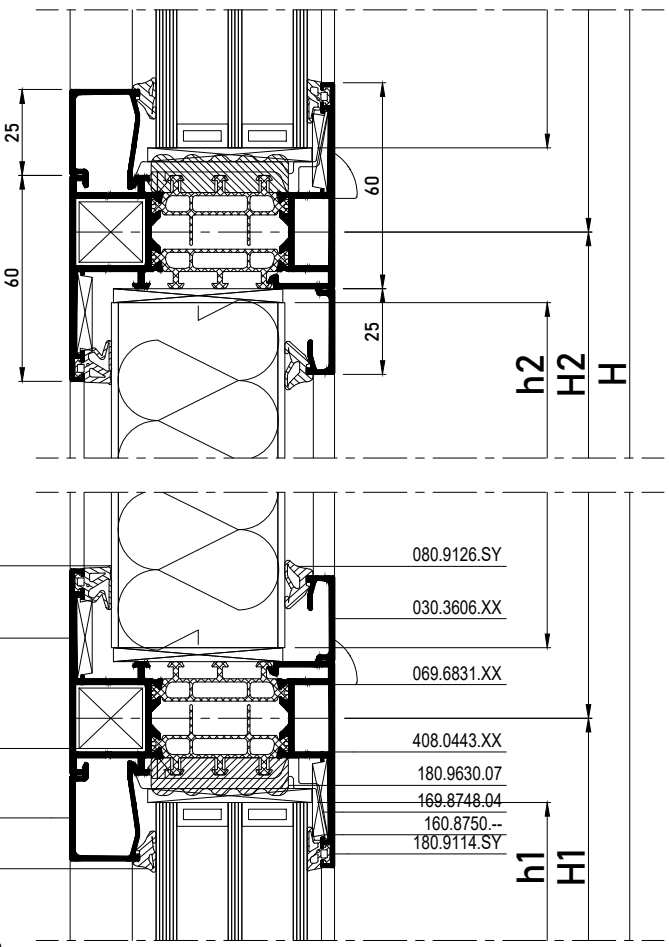

WFI 8

SECTIONS MASTERLINE 8-Fu

COMBINED FIXED WINDOW - SLIM

MASTERLINE 8-Fu

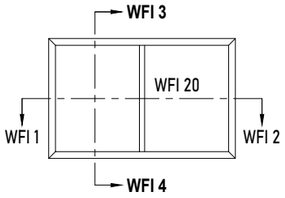

			#	Lm
408.0183.XX			2	B
			2	H
406.0350.XX			1	B - 66
030.3610.XX			2	B1 - 44
			2	B2 - 44
			2	H - 116
002.0682.XX			2	H - 116

b1 = B1 - 56	
b2 = B1 - 56	
h = H - 82	

ZIE BEGLAZINGSMETHODE
VOIR METHODE DE VITRAGE
SEE GLAZING METHOD
ZIE VERGLASUNGSWEISE
≥ 45mm

		#
168.7002.00		4
168.8002.00		4
160.8750.--		4
068.8932.00		2
168.8725.00		2
168.5012.--		2
168.8688.04		4
169.8748.04		PROD STEPS
069.6831.XX		PROD STEPS
180.9114.SY		(2xb1)+(2xh)
		(2xb2)+(2xh)
080.9125.04		(2xb1)+(2xh1)
		(2xb2)+(2xh2)
080.9631.07		4xH
180.9630.07		(2xB1)+(2xB2)
		+(2xH)

406.0350.XX > "ALLEEN VOOR VERTICAAL GEBRUIK"
406.0350.XX> "UNIQUEMENT POUR L'UTILISATION VERTICALE"
406.0350.XX > "ONLY FOR VERTICAL USE"
406.0350.XX > SIEHE "NUR FÜR VERTIKALE VERWENDUNG"

WFI 3

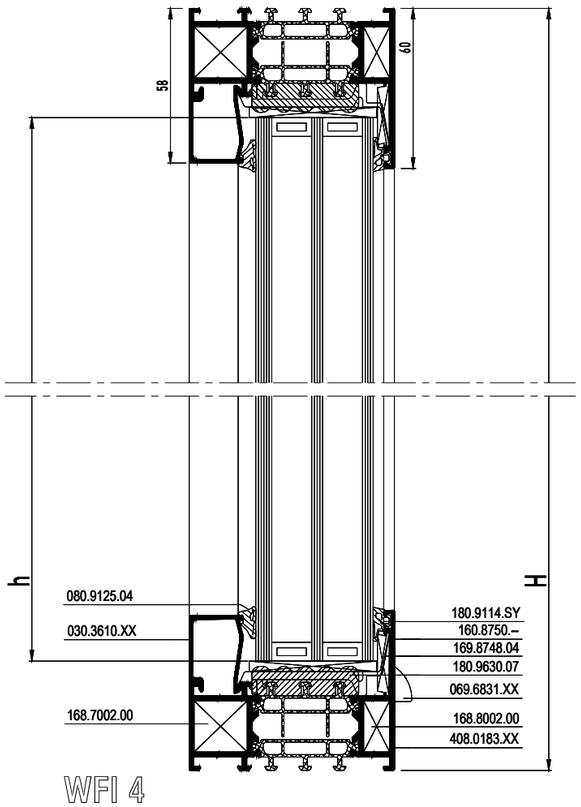

WFI 4

WFI 1 WFI 20 WFI 2

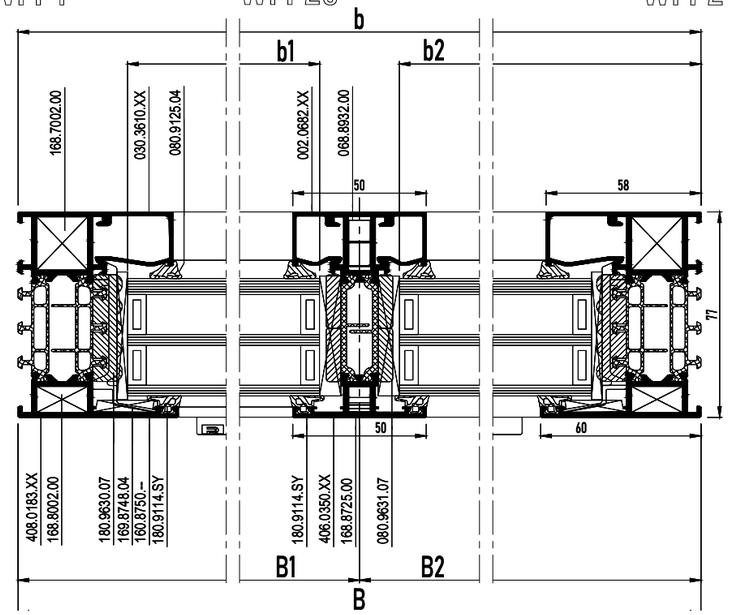

SECTIONS MASTERLINE 8-Fu

FIXED WINDOW FRAME WITH VENT

MASTERLINE 8-Fu

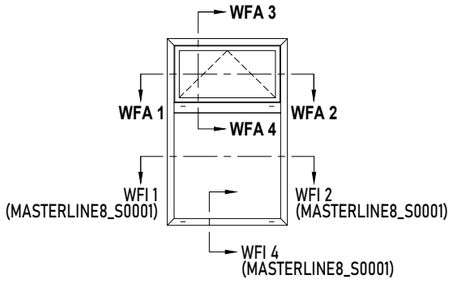

			#	Lm
408.0183.XX			2	B
			2	H
408.0102.XX			2	B - 54
			2	H2 - 37.5
408.0120.XX			1	B - 66
030.3613.XX			2	B - 154
			2	H2 - 187.5
030.3610.XX			2	B - 66
			2	H1 - 99.5

b1 = B - 82
h1 = H1 - 65.5
b2 = B - 170
h2 = H2 - 153.5

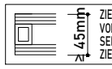

RAAMBESLAG > ZIE "OPENING WINDOWS"
ACCESSOIRES FENETRES > VOIRE "OPENING WINDOWS"
WINDOW GEAR > SEE "OPENING WINDOWS"
FENSTERBESCHLAG > SIEHE "OPENING WINDOWS"

OPTIE / OPTION (*)

		#
168.7002.00		4
168.8002.00		4
168.7011.00		4
168.8311.00		4
160.8750.--		12
160.8718.--		4
168.8712.00		2
168.5000.00		4
168.8688.04		4
169.8748.04		19H.F. ...
069.6831.XX		19H.F. ...
022.0048.SY		(2xb1)+(2xh1)
180.8204.XX		(2xb2)+(2xh2)
180.9114.SY		(2xb1)+(2xh1)
		(2xb2)+(2xh2)
180.9698.04		(2xB)+(2xH2)
180.9498.04		2
180.9630.07		(4xB)+(2xH1)
		+(2xH2)
080.9125.04		(2xb1)+(2xh1)
		(2xb2)+(2xh2)
168.8742.00 (*)		2
168.5012.-- (*)		2

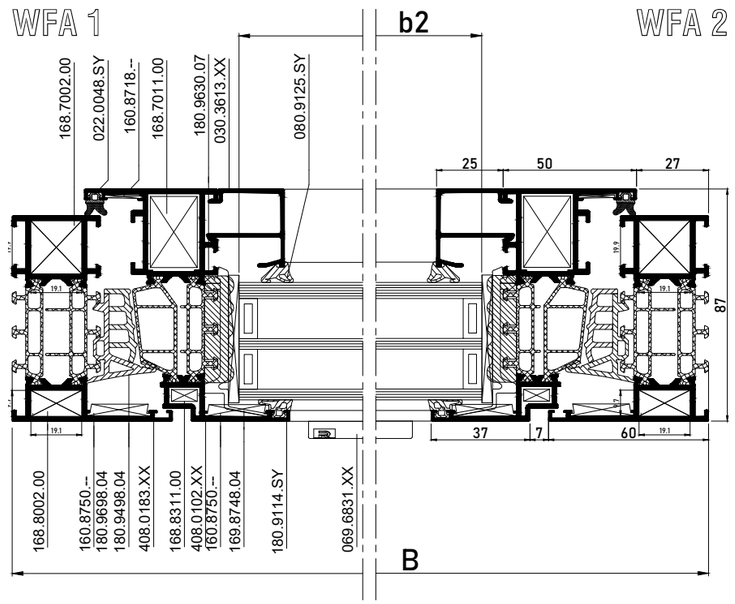

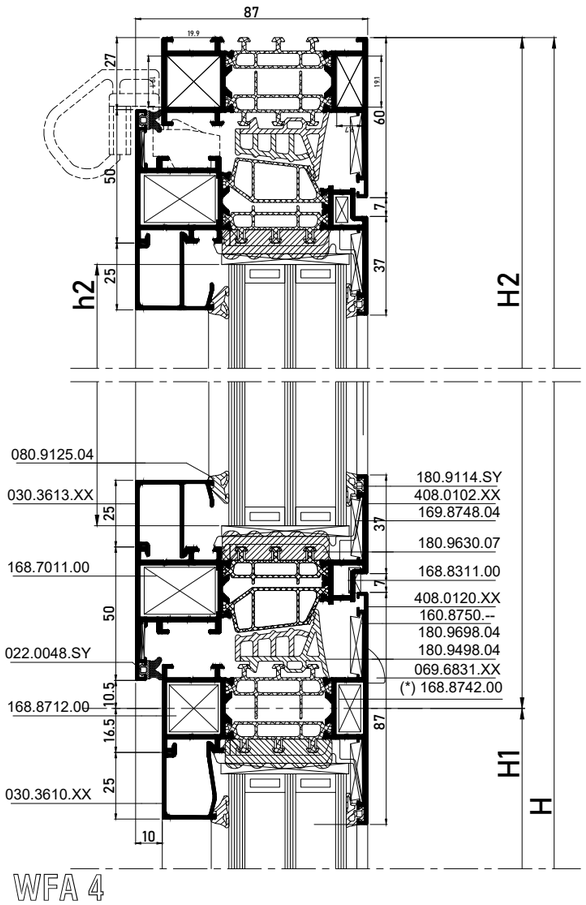

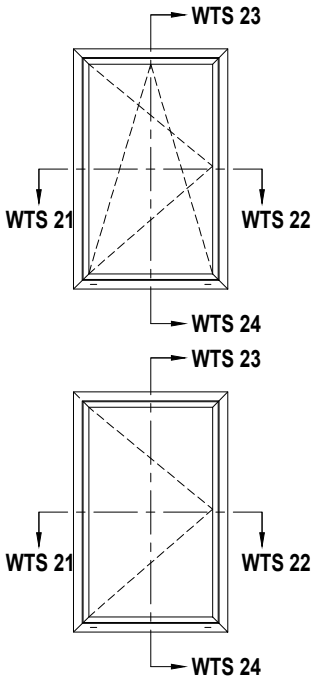

			#	Lm
408.0183.XX			2	B
			2	H
408.0102.XX			2	B - 54
			2	H - 54
030.3613.XX			2	B - 154
			2	H - 204

b = B - 170	
h = H - 170	

50mm
ZIE BEGLAZINGSMETHODE
VOIR METHODE DE VITRAGE
SEE GLAZING METHOD
ZIE VERGLASUNGSWEISE

	#
168.7002.00	4
168.8002.00	4
168.7011.00	4
168.8311.00	4
160.8750.--	8
160.8718.--	4
169.8748.04	PROD STEPS
069.6831.XX	PROD STEPS
180.8204.04	(2xB)+(2xH)
022.0048.SY	(2xB)+(2xH)
180.9114.SY	(2xb)+(2xh)
180.9698.04	(2xB)+(2xH)
180.9498.04	4
180.9630.07	(2xB)+(2xH)
080.9125.04	(2xb)+(2xh)
180.9445.04 (*)	(2xb)+(2xh)
180.9702.04 (*)	(2xB)+(2xH)

RAAMBESLAG > ZIE "HARDWARE CONFIGURATOR"
ACCESSOIRES FENETRES > VOIRE "HARDWARE CONFIGURATOR
WINDOW GEAR > SEE "HARDWARE CONFIGURATOR"
FENSTERBESCHLAG > SIEHE "HARDWARE CONFIGURATOR"

OPTIE / OPTION (*)

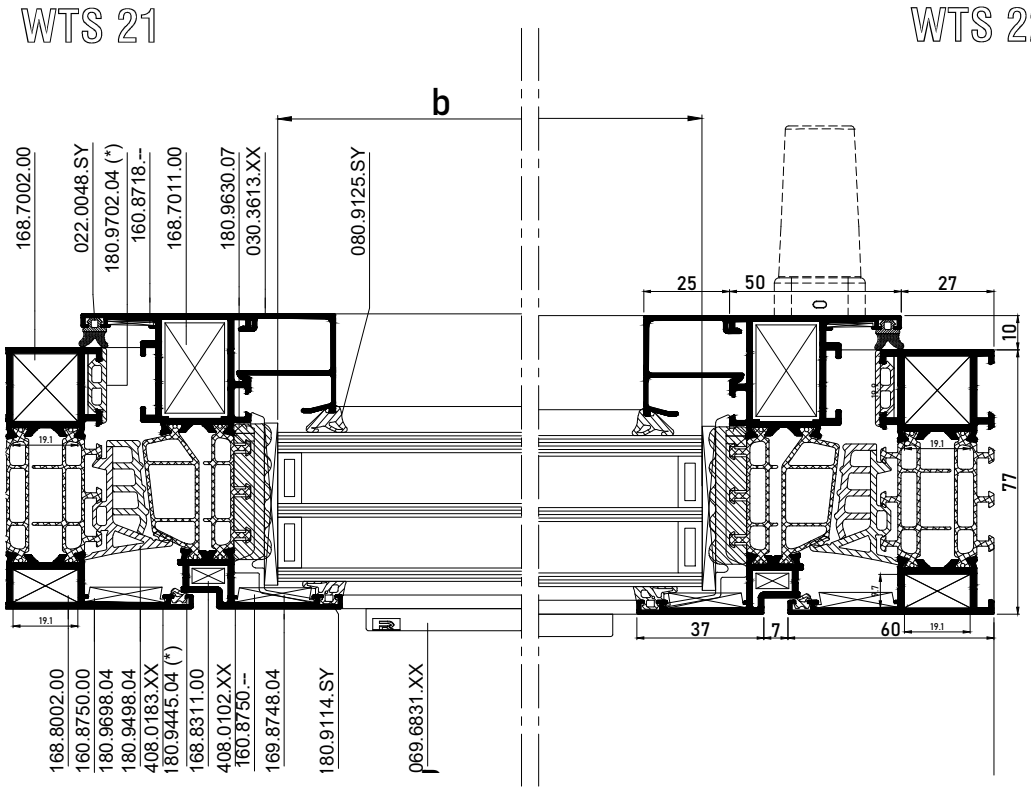

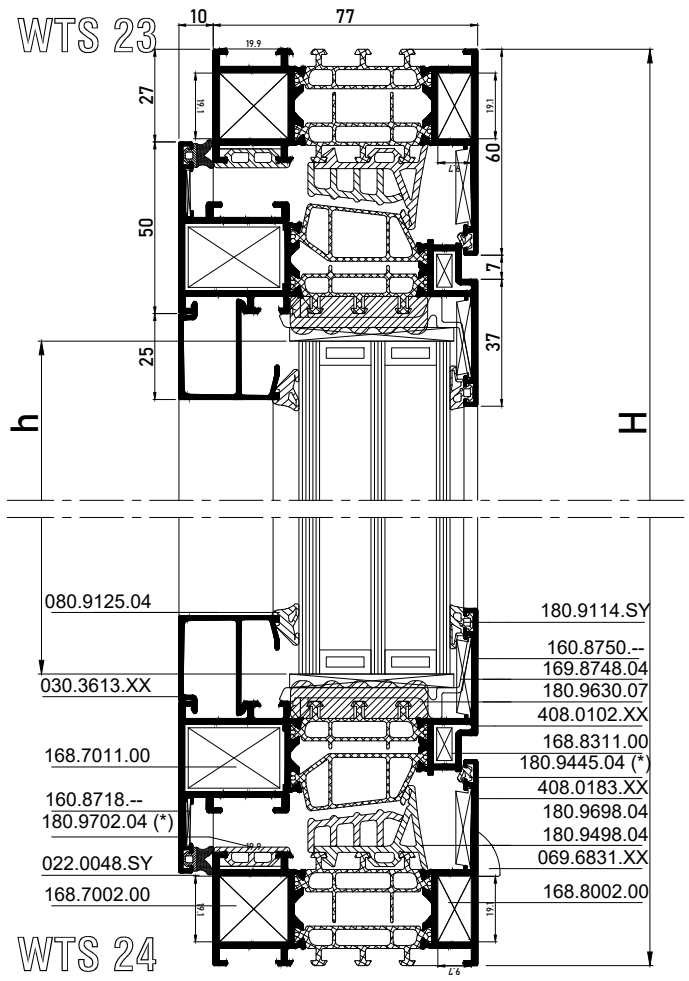

SECTIONS MASTERLINE 8-Fu

TURN AND TILT WINDOW HI -> STANDARD

MASTERLINE 8-Fu

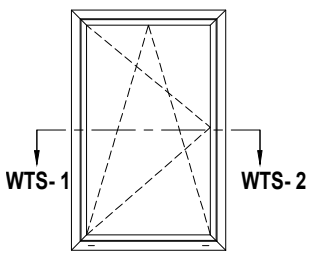

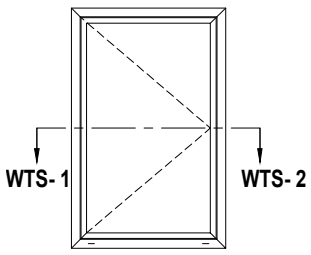

			#	Lm
408.0183.XX			2	B
			2	H
408.0102.XX			2	B - 54
			2	H - 54
030.3613.XX			2	B - 154
			2	H - 204

b = B - 170
h = H - 170

50mm
ZIE BEGLAZINGSMETHODE
VOIR METHODE DE VITRAGE
SEE GLAZING METHOD
ZIE VERGLASUNGSWEISE

		#
168.7002.00		4
168.8002.00		4
168.7011.00		4
168.8311.00		4
160.8750.--		8
160.8718.--		4
169.8748.04		PROD STEPS
069.6831.XX		PROD STEPS
180.8204.04		(2xB)+(2xH)
022.0048.SY		(2xB)+(2xH)
180.9114.SY		(2xb)+(2xh)
180.9698.04		(2xB)+(2xH)
180.9498.04		4
180.9630.07		(2xB)+(2xH)
080.9125.SY		(2xb)+(2xh)

180.9697.04		(2xB)+(2xH)
180.9497.04		4

RAAMBESLAG > HARDWARE CONFIGURATOR"
ACCESSOIRES FENETRES > VOIRE "HARDWARE CONFIGURATOR"
WINDOW GEAR > SEE "HARDWARE CONFIGURATOR"
FENSTERBESCHLAG > SIEHE "HARDWARE CONFIGURATOR"

OPTIE / OPTION (*)

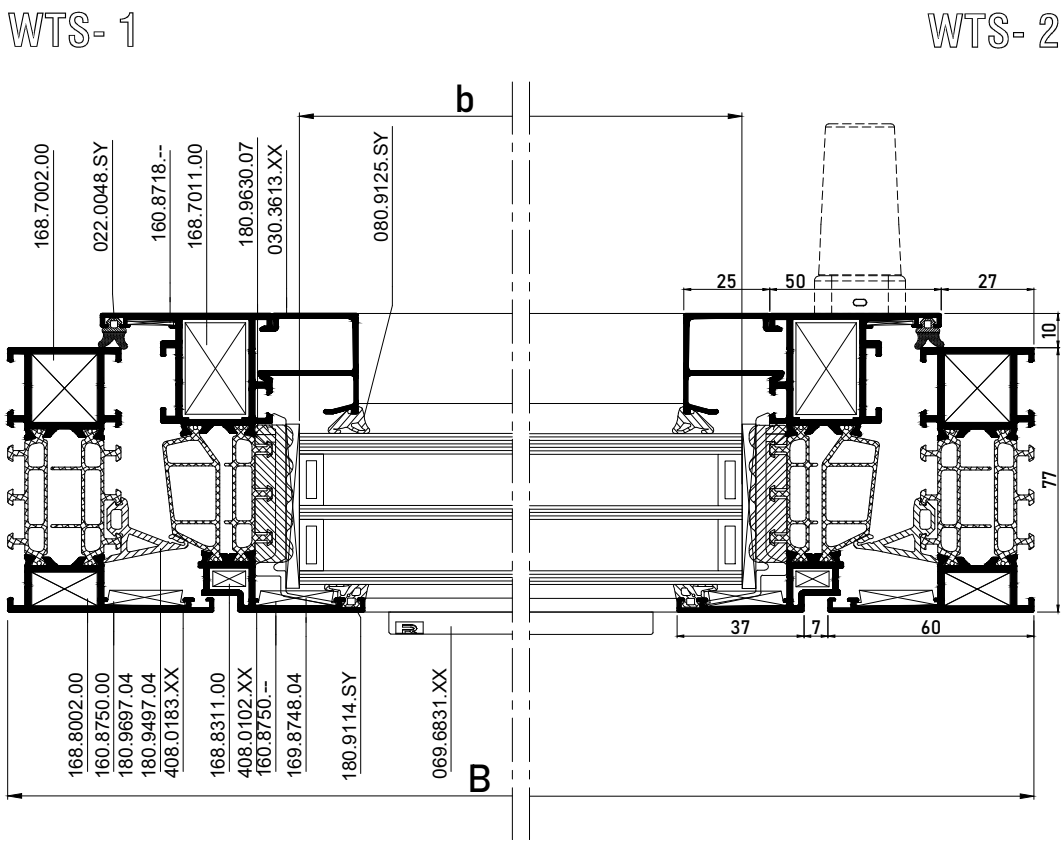

SECTIONS MASTERLINE 8-Fu

TURN AND TILT WINDOW HI -> HI+

MASTERLINE 8-Fu

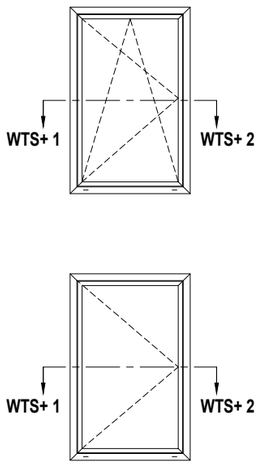

			#	Lm
408.0183.XX			2	B
			2	H
408.0102.XX			2	B - 54
			2	H - 54
030.3613.XX			2	B - 154
			2	H - 204

508.0183.XX			2	B
			2	H
508.0102.XX			2	B - 54
			2	H - 54

b = B - 170
h = H - 170

50mm

ZIE BEGLAZINGSMETHODE
VOIR METHODE DE VITRAGE
SEE GLAZING METHOD
ZIE VERGLASUNGSWEISE

		#
168.7002.00		4
168.8002.00		4
168.7011.00		4
168.8311.00		4
160.8750.--		8
160.8718.--		4
169.8748.04		PROD STEPS
069.6831.XX		PROD STEPS
180.8204.04		(2xB)+(2xH)
022.0048.SY		(2xB)+(2xH)
		X
180.9114.SY		(2xb)+(2xh)
180.9698.04		(2xB)+(2xH)
180.9498.04		4
180.9630.07		(2xB)+(2xH)
080.9125.04		(2xb)+(2xh)

180.8686.04		(2xB)+(2xH)

RAAMBESLAG > ZIE "HARDWARE CONFIGURATOR"
ACCESSOIRES FENETRES > VOIRE "HARDWARE CONFIGURATOR"
WINDOW GEAR > SEE "HARDWARE CONFIGURATOR"
FENSTERBESCHLAG > SIEHE "HARDWARE CONFIGURATOR"

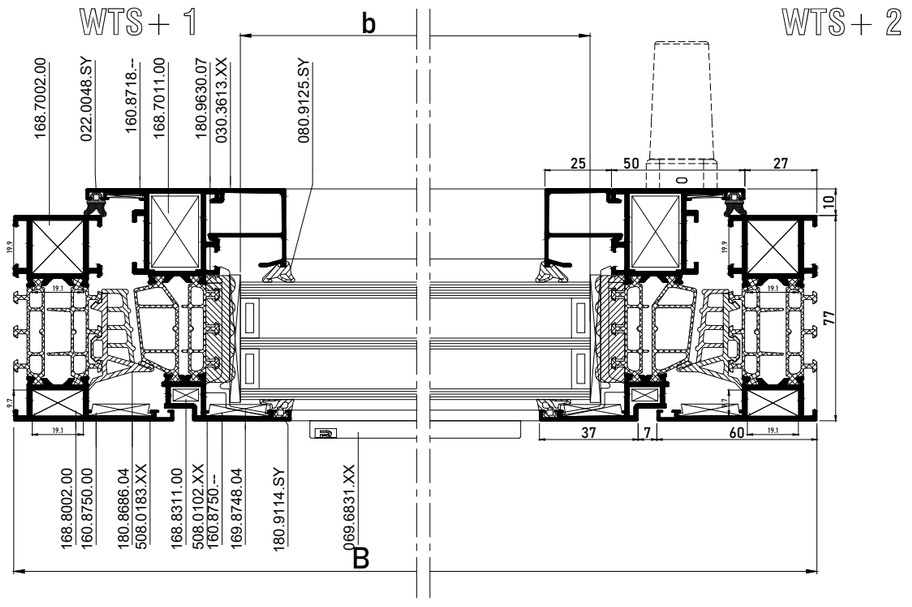

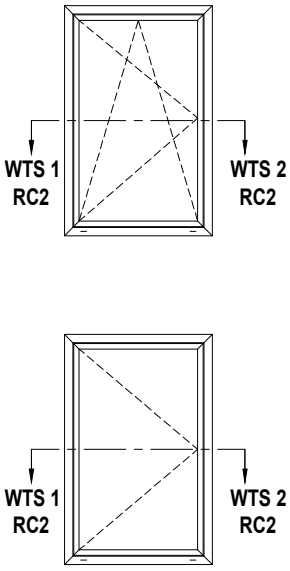

			#	Lm
408.0183.XX			2	B
			2	H
408.0192.XX			2	B - 54
			2	H - 54
030.3612.XX			2	B - 184
			2	H - 234
130.3652.XX			2	B - 184
			2	H - 234

b = B - 200
h = H - 200

50mm
ZIE BEGLAZINGSMETHODE
VOIR METHODE DE VITRAGE
SEE GLAZING METHOD
ZIE VERGLASUNGSWEISE

		#
168.7002.00		4
168.8002.00		4
168.7012.00		4
168.8012.00		4
160.8750.--		8
160.8718.--		4
169.8748.04		19H.F. ...
069.6831.XX		19H.F. ...
180.8204.04		(2xB)+(2xH)
022.0048.SY		(2xB)+(2xH)
180.9114.SY		(2xb)+(2xh)
180.9698.04		(2xB)+(2xH)
180.9498.04		4
180.9630.07		(2xB)+(2xH)
080.9125.04		(2xb)+(2xh)

RAAMBESLAG > ZIE "OPENING WINDOWS AP"
ACCESSOIRES FENETRES > VOIRE "OPENING WINDOWS AP"
WINDOW GEAR > SEE "OPENING WINDOWS AP"
FENSTERBESCHLAG > SIEHE "OPENING WINDOWS AP"

WTS 1
RC2

WTS 2
RC2

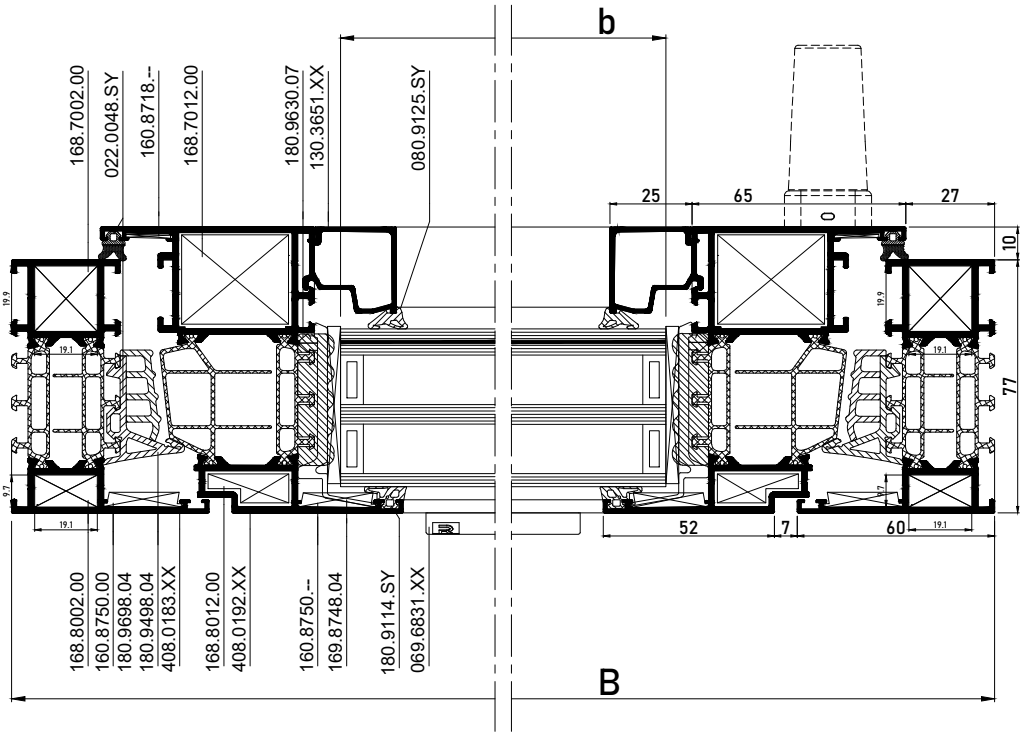

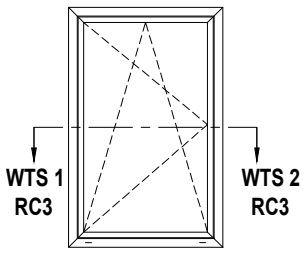

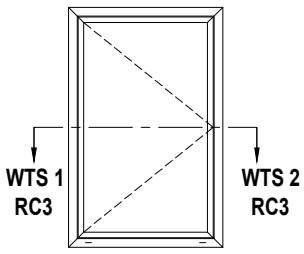

			#	Lm
408.0183.XX			2	B
			2	H
408.0192.XX			2	B - 54
			2	H - 54
030.3612.XX			2	B - 184
			2	H - 234
130.3652.XX			2	B - 184
			2	H - 234

b = B - 200
h = H - 200

≥ 50mm
ZIE BEGLAZINGSMETHODE
VOIR METHODE DE VITRAGE
SEE GLAZING METHOD
ZIE VERGLASUNGSWEISE

		#
168.7002.00		4
168.8002.00		4
168.7012.00		4
168.8012.00		4
160.8750.--		8
160.8718.--		4
169.8748.04		PROD STEPS
069.6831.XX		PROD STEPS
180.8204.04		(2xB)+(2xH)
022.0048.SY		(2xB)+(2xH)
180.9114.SY		(2xb)+(2xh)
180.9698.04		(2xB)+(2xH)
180.9498.04		4
180.9630.07		(2xB)+(2xH)
080.9125.04		(2xb)+(2xh)
+ 169.6538.17		19H.F. ...

RAAMBESLAG > ZIE "HARDWARE CONFIGURATOR"
ACCESSOIRES FENETRES > VOIRE "HARDWARE CONFIGURATOR
WINDOW GEAR > SEE "HARDWARE CONFIGURATOR
FENSTERBESCHLAG > SIEHE "HARDWARE CONFIGURATOR"

WTS 1
RC3

WTS 2
RC3

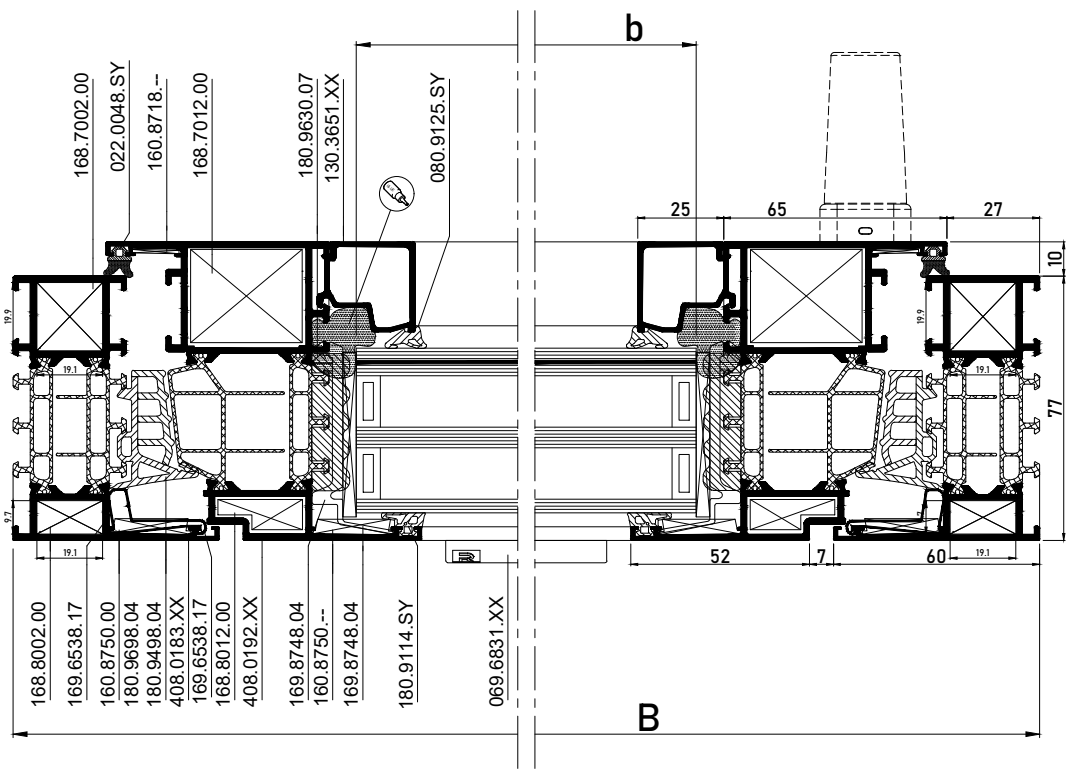

NOVATIO Seal&Bond MS 50-2K
or KENT Rotabond 2000 (084.9055.01)
or similar (084.9056.04)

SECTIONS MASTERLINE 8-Fu

TURN AND TILT WINDOW 130KG < FG < 200KG

MASTERLINE 8-Fu

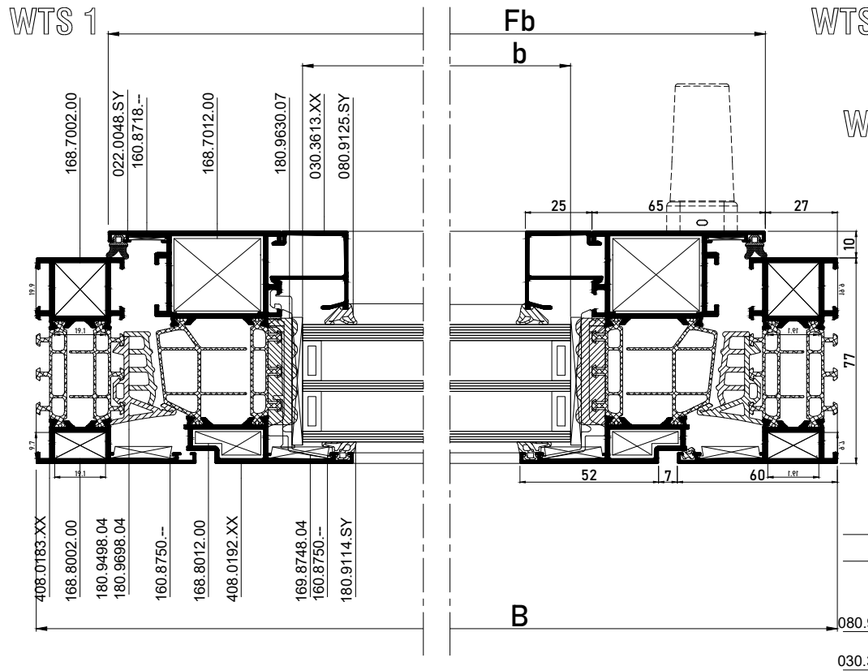

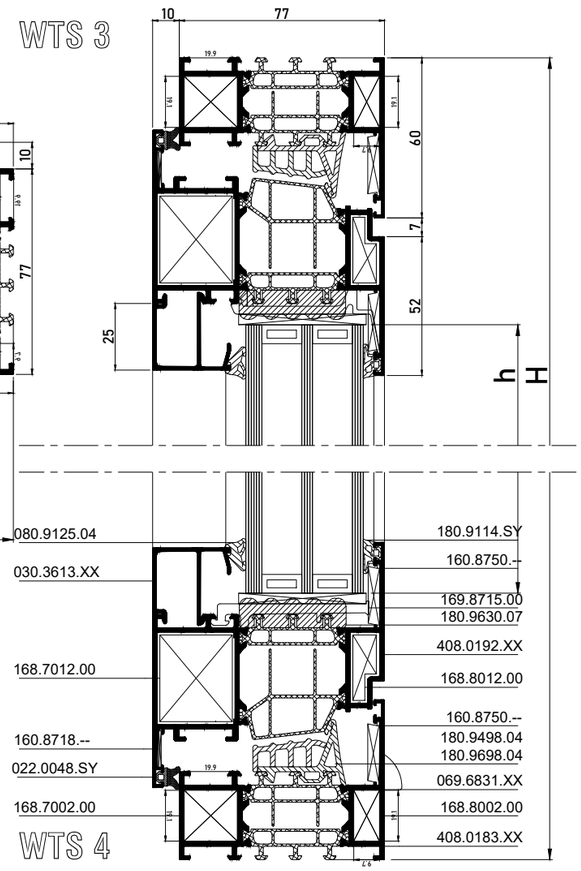

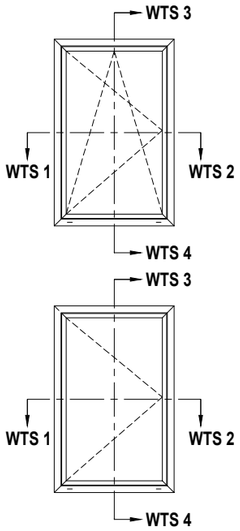

130 Kg < FG <200Kg

			#	Lm
408.0183.XX			2	B
			2	H
408.0192.XX			2	B - 54
			2	H - 54
030.3613.XX			2	B - 184
			2	H - 234

168.7002.00		4
168.8002.00		4
168.7012.00		4
168.8012.00		4
160.8750.--		8
160.8718.--		4
169.8748.04		PROD STEPS
069.6831.XX		PROD STEPS
180.8204.04		(2xB)+(2xH)
022.0048.SY		(2xB)+(2xH)
180.9114.SY		(2xb)+(2xh)
180.9698.04		(2xB)+(2xH)
180.9498.04		4
180.9630.07		(2xB)+(2xH)
080.9125.04		(2xb)+(2xh)
180.9445.04 (*)		(2xB)+(2xH)
(1) 169.8748.04		PROD STEPS
(2) 169.8715.00		PROD STEPS
169.8748.04		PROD STEPS

b = B - 200

h = H - 200

50mm ZIE BEGLAZINGSMETHODE
VOIR METHODE DE VITRAGE
SEE GLAZING METHOD
ZIE VERGLASUNGSWEISE

RAAMBESLAG > ZIE "HARDWARE CONFIGURATOR"
ACCESSOIRES FENETRES > VOIRE "HARDWARE CONFIGURATOR"
WINDOW GEAR > SEE "HARDWARE CONFIGURATOR"
FENSTERBESCHLAG > SIEHE "HARDWARE CONFIGURATOR

130 Kg < FG < 170 Kg (1)

170 Kg < FG < 200 Kg (2)

SECTIONS MASTERLINE 8-Fu

SIDE-HUNG WINDOW 200KG < FG < 300KG

MASTERLINE 8-Fu

			#	Lm
408.0183.XX			2	B
			2	H
408.0112.XX			2	B - 54
			2	H - 54
030.3613.XX			2	B - 214
			2	H - 264

168.7002.00		4
168.8002.00		4
168.7013.00		4
168.8013.00		4
160.8750.--		8
160.8718.--		4
169.8748.04		PROD STEPS
069.6831.XX		PROD STEPS
180.8204.04		(2xB)+(2xH)
022.0048.SY		(2xB)+(2xH)
180.9114.SY		(2xb)+(2xh)
180.9698.04		(2xB)+(2xH)
180.9498.04		4
180.9630.07		(2xB)+(2xH)
080.9125.04		(2xb)+(2xh)

169.8715.00		PROD STEPS
169.8748.04		PROD STEPS

b = B - 230

h = H - 230

ZIE BEGLAZINGSMETHODE
VOIR METHODE DE VITRAGE
SEE GLAZING METHOD
ZIE VERGLASUNGSWEISE

RAAMBESLAG > ZIE "HARDWARE CONFIGURATOR"
ACCESSOIRES FENETRES > VOIRE "HARDWARE CONFIGURATOR"
WINDOW GEAR > SEE "HARDWARE CONFIGURATOR"
FENSTERBESCHLAG > SIEHE "HARDWARE CONFIGURATOR"

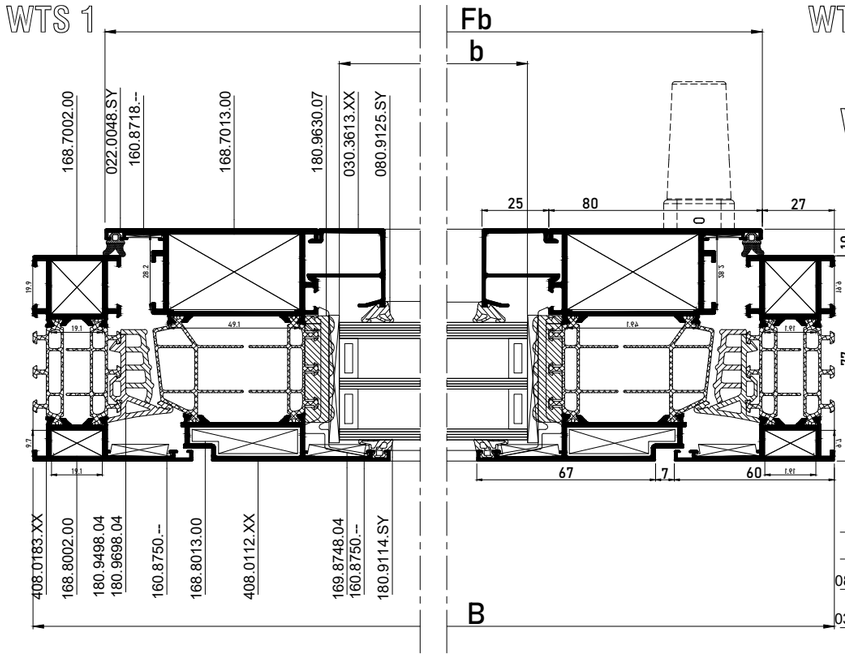

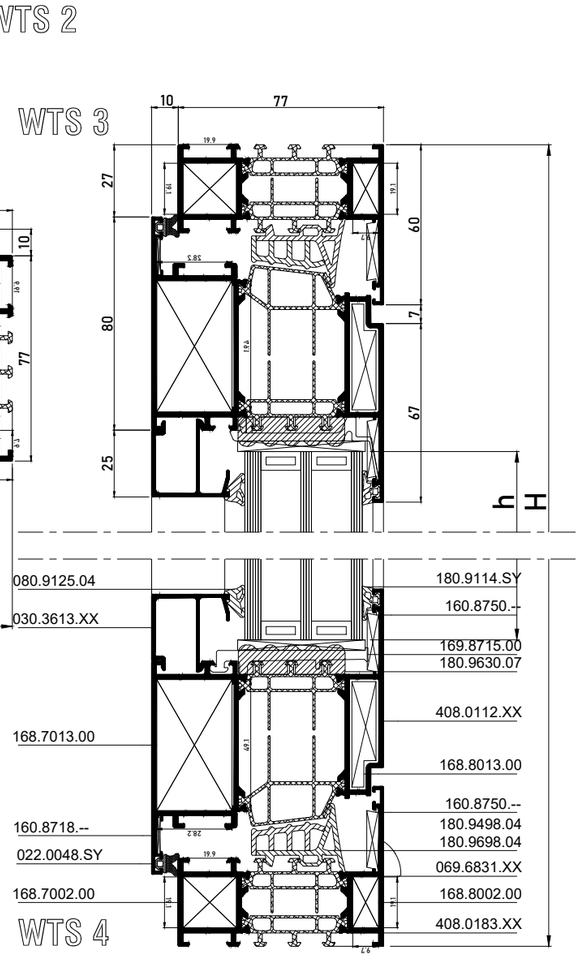

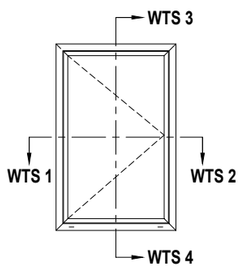

200 Kg < FG <300Kg

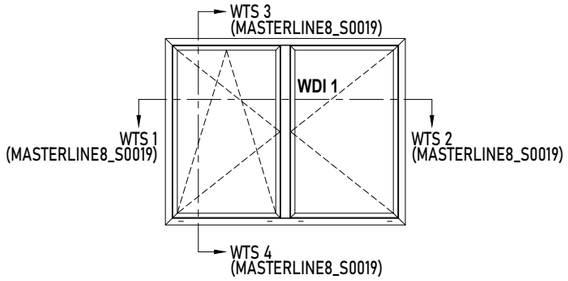

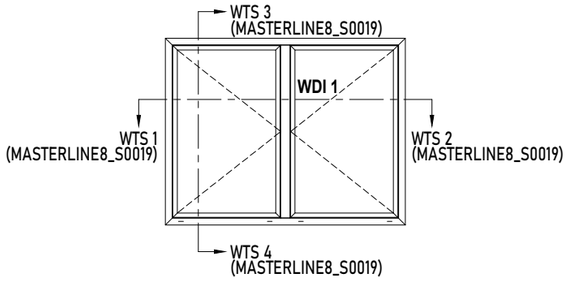

			#	Lm
408.0183.XX			2	B
			2	H
408.0192.XX			2	B1 - 30.5
			2	B2 - 30.5
			4	H - 54
408.1115.XX			1	H - 138
030.3613.XX			2	B1 - 160.5
			2	B2 - 160.5
			4	H - 234

b1 = B1 - 176.5
b2 = B2 - 176.5
h = H - 200

50mm
ZIE BEGLAZINGSMETHODE
VOIR METHODE DE VITRAGE
SEE GLAZING METHOD
ZIE VERGLASUNGSWEISE

		#
168.7002.00		4
168.8002.00		4
168.7012.00		8
168.8012.00		8
160.8750.--		12
160.8718.--		8
169.8748.04		19H.F. ...
069.6831.XX		19H.F. ...
169.6897.SY		1
052.5318.--		2
052.5327.--		2
052.5318.--		H/300 mm
052.5329.--		H/300 mm
180.8204.04 of / ou / or / oder 022.0048.SY		(2xB)+(3xH)
		(2xB)+(3xH)
180.9114.SY		(2xb1)+(2xh)
		(2xb2)+(2xh)
180.9698.04		(2xB)+(3xH)
180.9498.04		4
180.9630.07		(2xB1)+(2xB2)
		+(4xH)
080.9125.04		(2xb1)+(2xh)
		(2xb2)+(2xh)
080.9633.07		1xH

RAAMBESLAG > ZIE "OPENING WINDOWS"
ACCESSOIRES FENETRES > VOIRE "OPENING WINDOWS"
WINDOW GEAR > SEE "OPENING WINDOWS"
FENSTERBESCHLAG > SIEHE "OPENING WINDOWS"

WDI 1

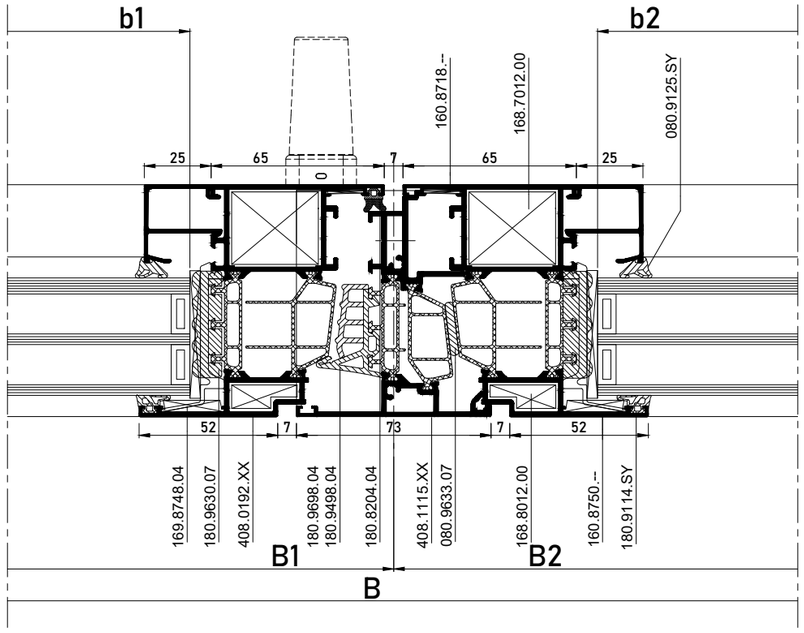

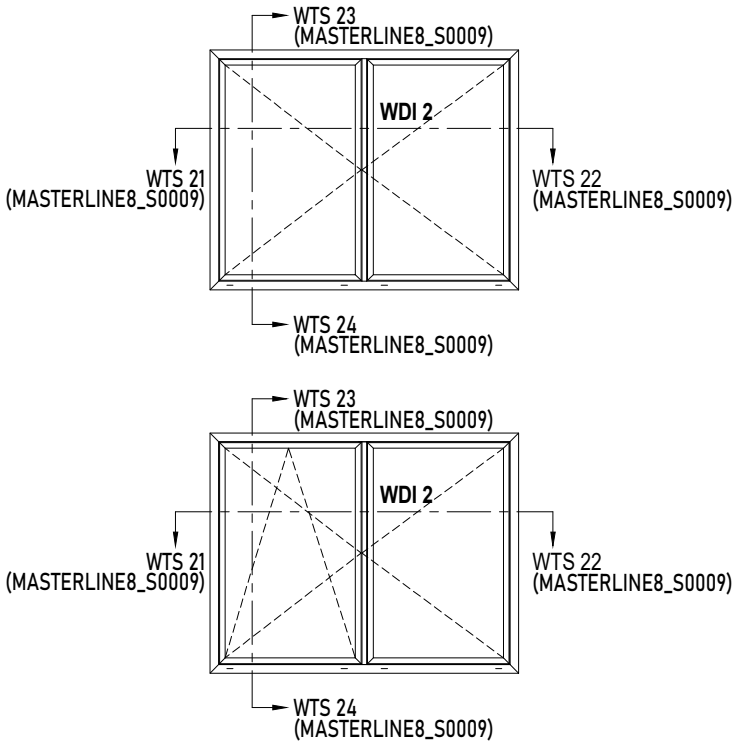

			#	Lm
408.0183.XX			2	B
			2	H
408.0102.XX			2	B1 - 19.5
			2	B2 - 19.5
			3	H - 54
408.0105.XX			1	H - 101.4
030.3613.XX			2	B1 - 119.5
			2	B2 - 119.5
			4	H - 204

		#
168.7002.00		4
168.8002.00		4
168.7011.00		8
168.8311.00		8
160.8750.--		12
160.8718.--		6
169.8748.04		19H.F. ...
069.6831.XX		19H.F. ...
169.6105.SY		1
052.5311.--		2
052.5339.--		2
180.8204.04 of / ou / or / oder 022.0048.SY		(2xB)+(3xH)
		(2xB)+(3xH)
180.9114.SY		(2xb1)+(2xh)
		(2xb2)+(2xh)
180.9698.04		(2xB)+(3xH)
180.9498.04		4
180.9630.07		(2xB1)+(2xB2)
		+(4xH)
080.9125.04		(2xb1)+(2xh)
		(2xb2)+(2xh)

b1 = B1 - 135.5
b2 = B2 - 135.5
h = H - 170

50mm
ZIE BEGLAZINGSMETHODE
VOIR METHODE DE VITRAGE
SEE GLAZING METHOD
ZIE VERGLASUNGSWEISE

RAAMBESLAG > ZIE "OPENING WINDOWS"
ACCESSOIRES FENETRES > VOIRE "OPENING WINDOWS"
WINDOW GEAR > SEE "OPENING WINDOWS"
FENSTERBESCHLAG > SIEHE "OPENING WINDOWS"

WDI 2

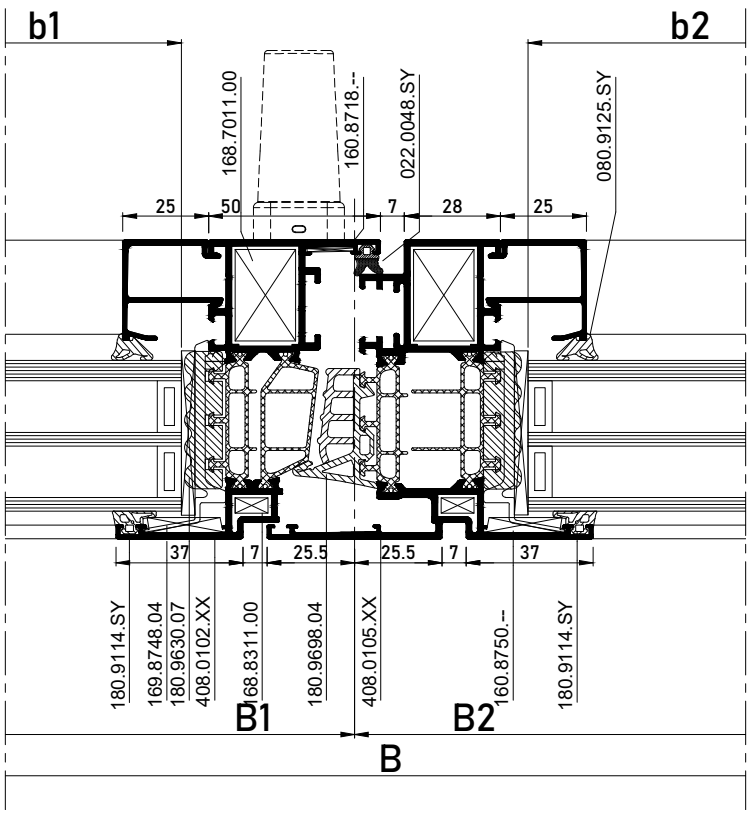

SECTIONS MASTERLINE 8-SP

PIVOT WINDOW

MASTERLINE 8-Fu

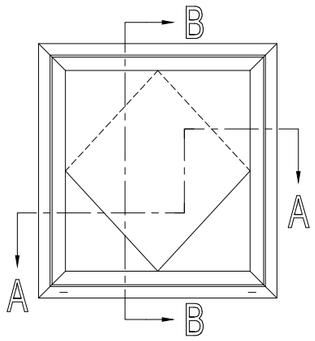

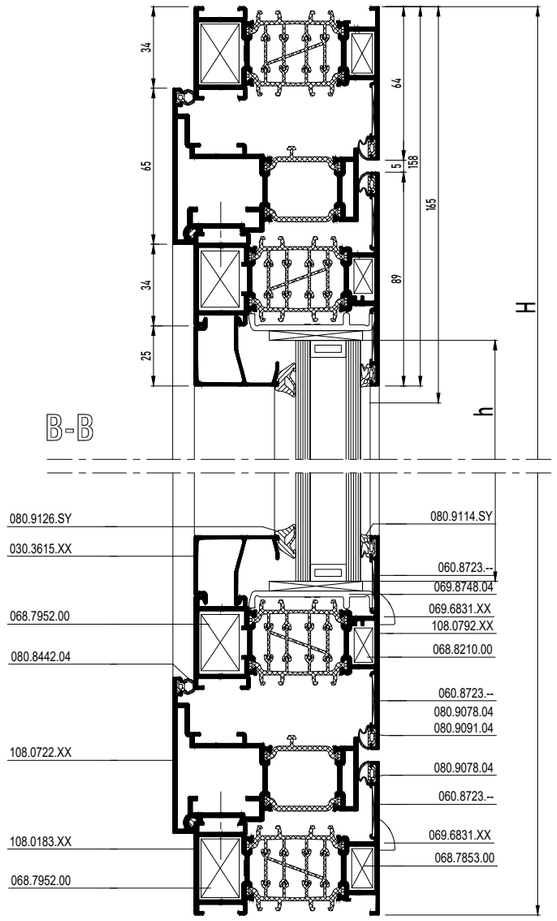

			#	Lm
108.0183.XX			2	B
			2	H
108.0792.XX			2	B - 138
			2	H - 138
108.0722.XX			1	B - 68
			1	B - 68
			1	H / 2 - 34,4
			1	H / 2 - 34,4
			1	H / 2 - 34,4
			1	H / 2 - 34,4
030.3615.XX			2	B - 266
			2	H - 316

		#
068.7952.00		8
068.7853.00		4
068.8210.00		4
060.8746.--		12
057.5722.--		12
069.8748.04		PROD STEPS
052.5328.--		1/300mm
069.6831.XX		PROD STEPS
080.9381.04		(2xB) + (2xH)
080.9078.04		(4xB) + (4xH)
080.9091.04		4
080.8442.04		(2xB) + (2xH)
080.9114.SY		(2xb) + (2xh)
080.9126.SY		(2xb) + (2xh)

b = B - 278

h= H - 278

≥40mm

ZIE BEGLAZINGSMETHODE
VOIR METHODE DE VITRAGE
SEE GLAZING METHOD
SIEHE VERGLASUNGSWEISE

HET GEBRUIK VAN EEN OPENINGSBEGRENZER WORDT GEADVISEERD
L'UTILISATION D'UN LIMITEUR D'OUVERTURE EST RECOMMANDÉE
THE USE OF AN OPENING RESTRICTOR IS RECOMMENDED
DIE VERWENDUNG EINES ÖFFNUNGSBEGRENZERS WIRD EMPFOHLEN

RAAMBESLAG > ZIE "HARDWARE CONFIGURATOR"
ACCESSOIRES FENETRES > VOIRE "HARDWARE CONFIGURATOR
WINDOW GEAR > SEE "HARDWARE CONFIGURATOR
FENSTERBESCHLAG > SIEHE "HARDWARE CONFIGURATOR"

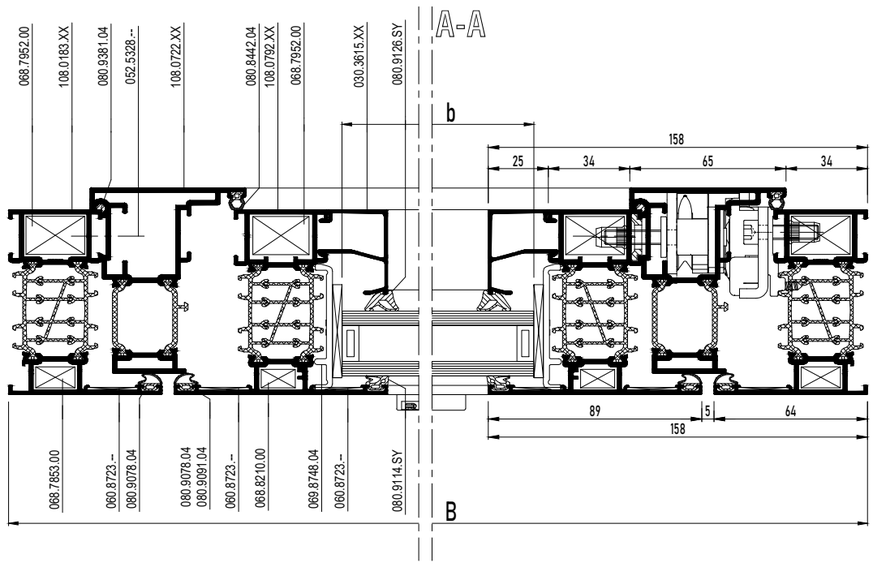

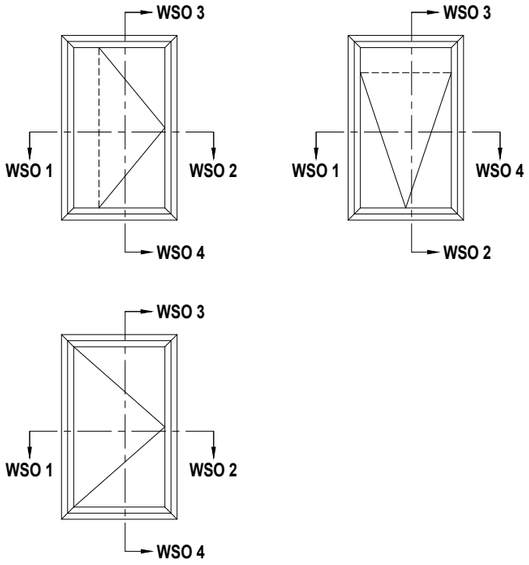

			#	Lm
408.0183.XX			2	B
			2	H
408.0041.XX			2	B - 54
			2	H - 54
030.3613.XX			2	B - 192
			2	H - 242
004.3846.XX			1	B

b = B - 208

h = H - 208

ZIE BEGLAZINGSMETHODE
VOIR METHODE DE VITRAGE
SEE GLAZING METHOD
SIEHE VERGLASUNGSWEISE

50mm

		#
168.7002.00		4
168.8002.00		4
168.7012.00		4
168.8012.00		4
160.8750.--		8
160.8718.--		4
169.8749.04		PROD STEPS
069.6831.XX		PROD STEPS
180.8204.04		(2xB)+(2xH)
of / ou / or / oder		
022.0048.SY		(2xB)+(2xH)
180.9114.SY		(2xb)+(2xh)
180.9698.04		(2xB) + (2xH)
180.9498.04		4
180.9630.07		(2xB) + (2xH)
080.9125.04		(2xb) + (2xh)

RAAMBESLAG > ZIE "HARDWARE CONFIGURATOR"
ACCESSOIRES FENETRES > VOIRE "HARDWARE CONFIGURATOR"
WINDOW GEAR > SEE "HARDWARE CONFIGURATOR"
FENSTERBESCHLAG > SIEHE "HARDWARE CONFIGURATOR

WSO 1

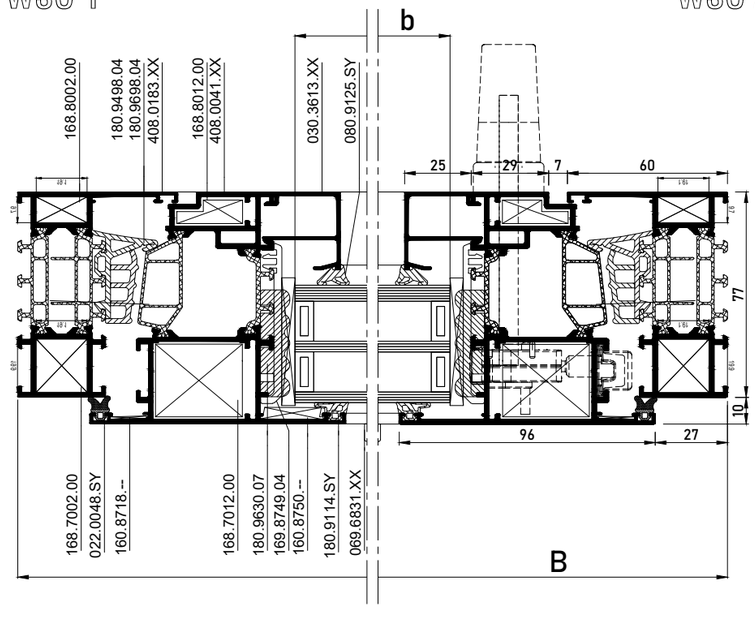

WSO 2

WSO 3

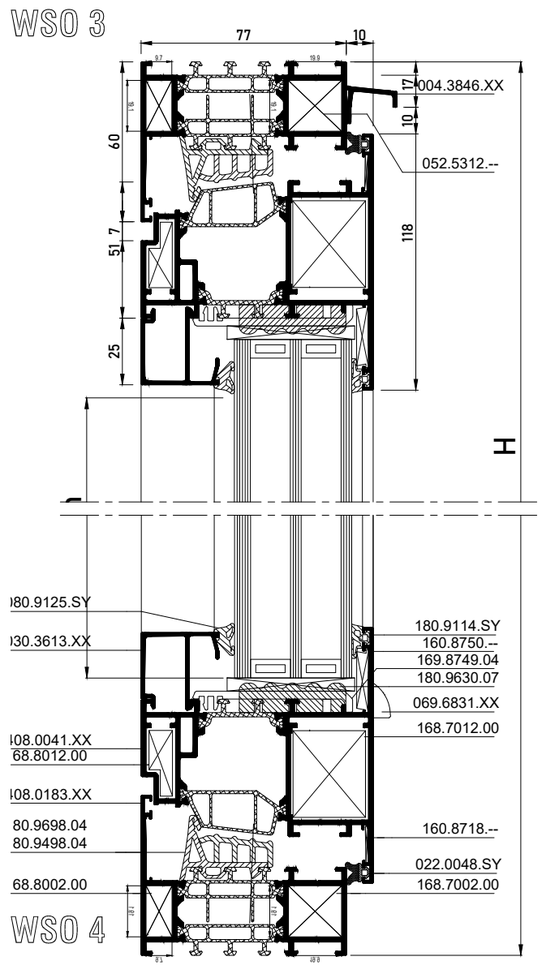

WSO 4

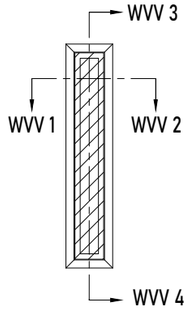

			#	Lm
408.0183.XX			2	B
			2	H
408.0701.XX			1	H - 56.4

		#
168.7002.00		4
168.8002.00		4
160.8750.--		8
168.5000.00		8
168.5012.--		4
069.6831.XX		PROD STEPS
169.6750.XX		2
052.5317.--		4
169.6880.SY		2
052.5316.--		8
180.9697.04		(2xB) + (2xH)
180.0048.04		2xH
080.8442.04		2xB
180.9118.04		(2xB) + (2xH)

RAAMBESLAG > ZIE HARDWARE CONFIGURATOR
ACCESSOIRES FENETRES > VOIRE HARDWARE CONFIGURATOR
WINDOW GEAR > SEE HARDWARE CONFIGURATOR
FENSTERBESCHLAG > SIEHE HARDWARE CONFIGURATOR

WVV 3

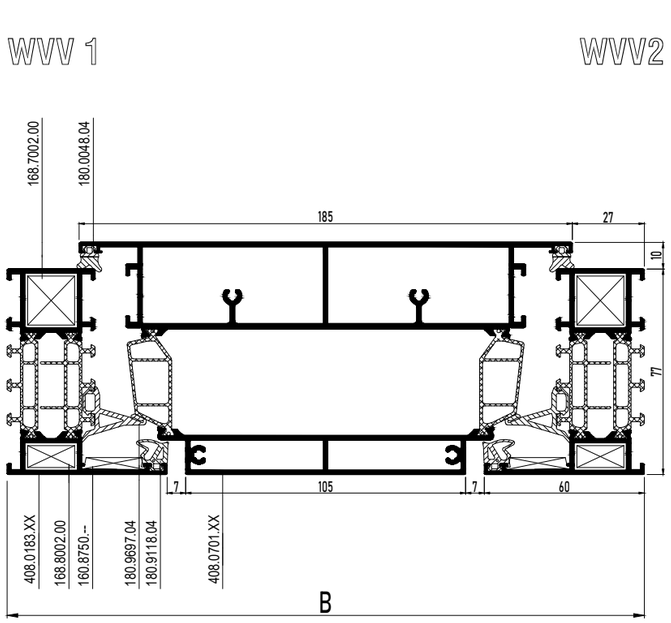

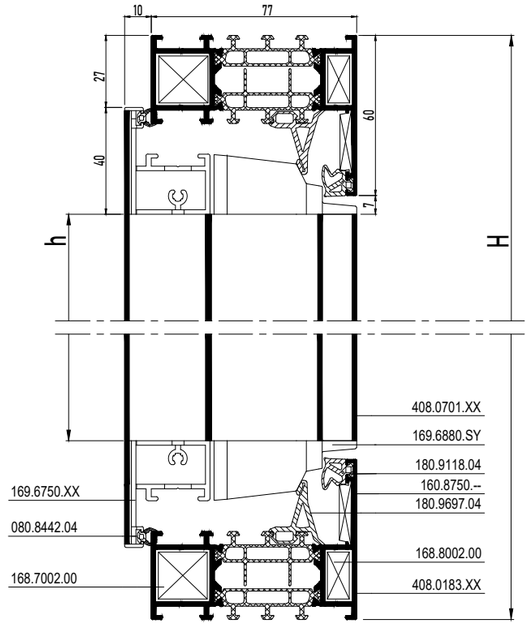

WVV 4

SECTIONS MASTERLINE 8-Fu

DOUBLE CASEMENT WINDOW OUTWARD OPENING

MASTERLINE 8-Fu

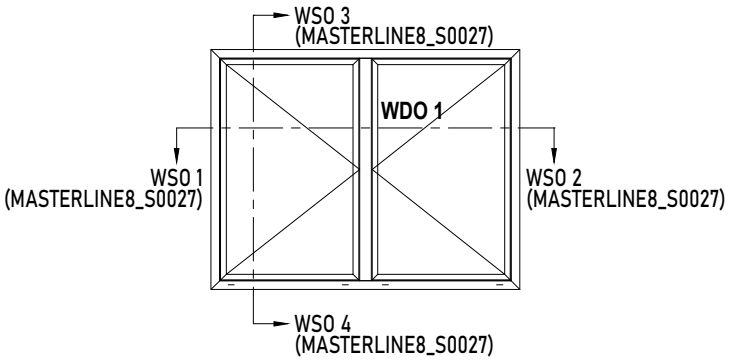

			#	Lm
408.0183.XX			2	B
			2	H
408.1051.XX			2	B1 - 30.5
			2	B2 - 30.5
			4	H - 54
408.1115.XX			1	H - 138
030.3613.XX			2	B1 - 212.5
			2	B2 - 212.5
			4	H - 286
004.3846.XX			1	B

b1 = B1 - 228.5	
b2 = B2 - 228.5	
h = H - 252	

50mm
ZIE BEGLAZINGSMETHODE
VOIR METHODE DE VITRAGE
SEE GLAZING METHOD
ZIE VERGLASUNGSWEISE

		#
168.7002.00		4
168.8002.00		4
168.7013.00		8
168.8013.00		8
160.8750.--		12
160.8718.--		8
169.8748.04		19H.F. ...
169.6897.SY		1
052.5318.--		2
052.5327.--		2
052.5318.--		1/300 mm
052.5329.--		1/300 mm
180.8204.04		(2xB)+(3xH)
022.0048.SY		(2xB)+(3xH)
180.9114.04		(2xb1) + (2xh)
		(2xb2) + (2xh)
180.9698.04		(2xB) + (3xH)
180.9498.04		6
180.9630.07		(2xb1) + (2xh)
		(2xb2) + (2xh)
080.9125.SY		(2xb1) + (2xh)
		(2xb2) + (2xh)
080.9633.07		1xH
187.1051.07		(2xB) + (4xH)

WDO 1

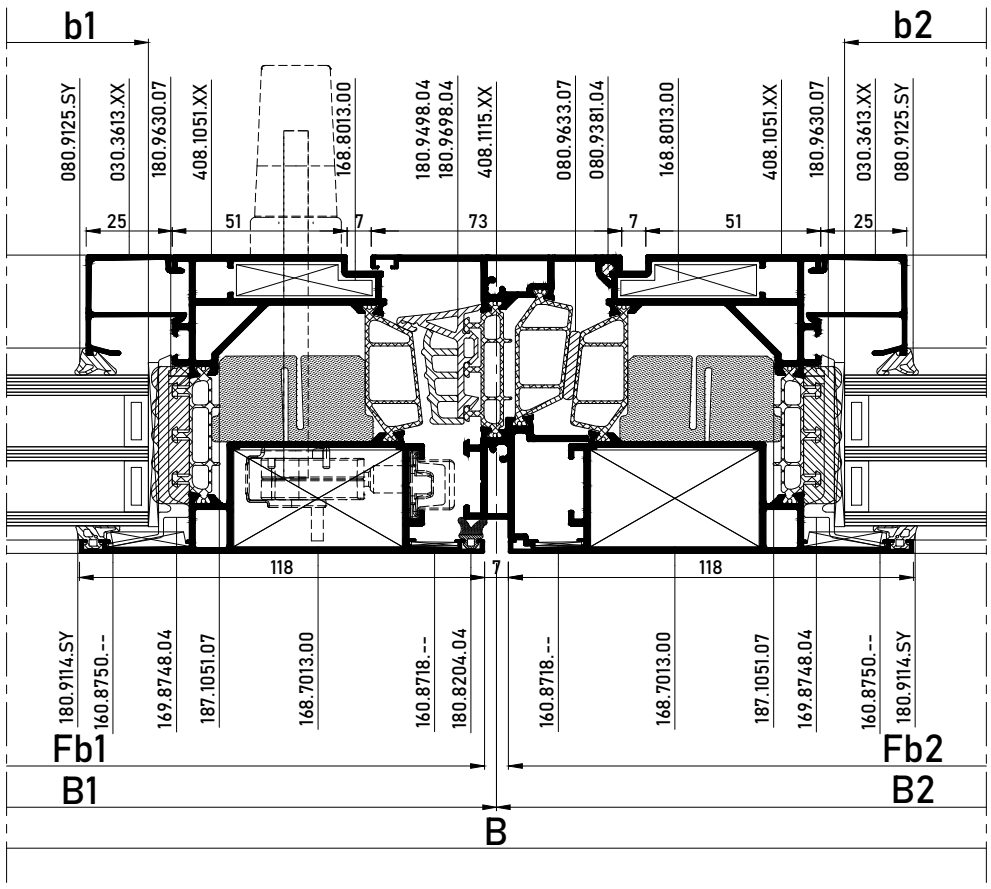

RAAMBESLAG > ZIE "OPENING WINDOWS"
ACCESSOIRES FENETRES > VOIRE "OPENING WINDOWS"
WINDOW GEAR > SEE "OPENING WINDOWS"
FENSTERBESCHLAG > SIEHE "OPENING WINDOWS"

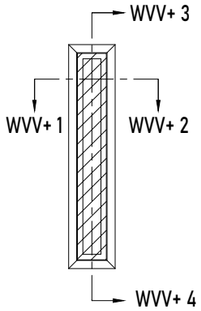

			#	Lm
408.0183.XX			2	B
			2	H
408.0701.XX			1	H - 56.4

508.0183.XX			2	B
			2	H
508.0701.XX			1	H - 56.4

187.0701.07		H - 56.4

		#
168.7002.00		4
168.8002.00		4
160.8750.--		8
168.5000.00		8
168.5012.--		4
069.6831.XX		PROD STEPS
169.6750.XX		2
052.5317.--		4
169.6880.SY		2
052.5316.--		8
~~180.9697.04~~		~~(2xB) + (2xH)~~
180.0048.04		2xH
080.8442.04		2xB
180.9118.04		(2xB) + (2xH)

180.8682.04		(2xB) + (2xH)
180.9620.04		(2xB) + (2xH)

RAAMBESLAG > ZIE HARDWARE CONFIGURATOR
ACCESSOIRES FENETRES > VOIRE HARDWARE CONFIGURATOR
WINDOW GEAR > SEE HARDWARE CONFIGURATOR
FENSTERBESCHLAG > SIEHE HARDWARE CONFIGURATOR

WVV+ 1

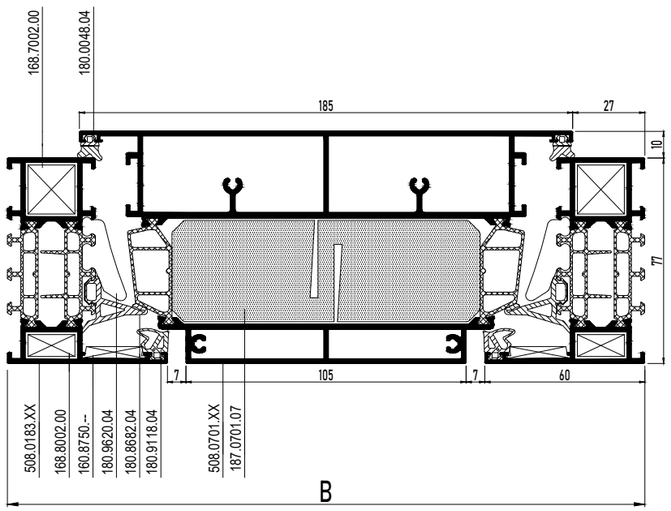

WVV+ 2

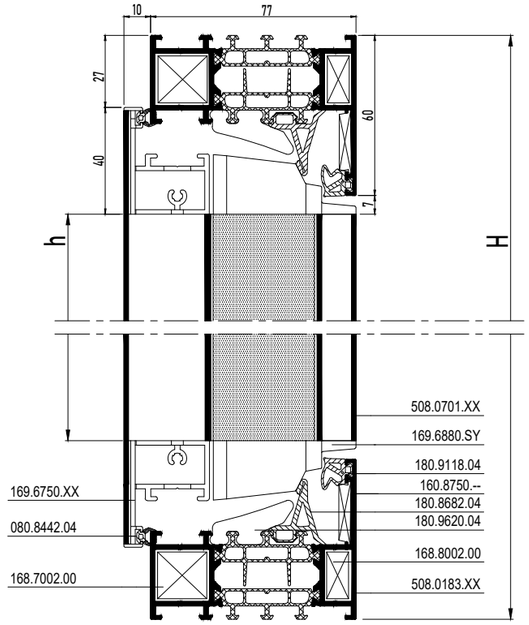

WVV+ 4

SECTIONS MASTERLINE 8-Fu

FRONT SLIDE

MASTERLINE 8-Fu

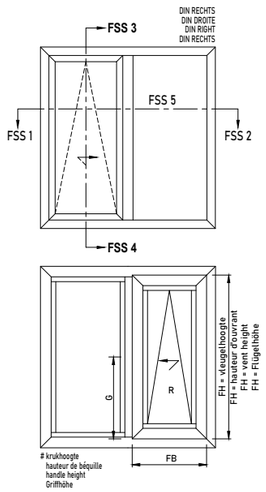

			#	Lm
408.0125.XX			2	B
			2	H
408.0114.XX			1	H-106
408.0192.XX			2	B1 - 67.5
			2	H - 94
030.3613.XX			2	B1 - 197.5
			2	H - 274
030.3610.XX			2	B2 - 79.5
			2	H - 156
030.3877.XX			1	B

b1 = B1 - 213.5
h1 = H - 240
b2 = B2 - 95.5
h2 = H - 122

50mm ZIE BEGLAZINGSMETHODE
VOIR METHODE DE VITRAGE
SEE GLAZING METHOD
ZIE VERGLASUNGSWEISE

160 kg

030.0450.AN			1	B - 94
030.0452.17			1	B - 102
030.0453.SY			1	B - 102
030.0451.XX			1	FB - 98
030.0454.XX			1	FB - 8
030.0460.--			1	FB - 736
001.0075.17			-	-

200 kg

030.0450.AN			1	B - 94
030.0452.17			1	B - 102
030.0453.SY			1	B - 102
030.0451.XX			1	FB - 98
030.0454.XX			1	FB - 8
030.0460.--			1	FB - 1194
001.0075.17			-	-

RAAMBESLAG > ZIE HARDWARE CONFIGURATOR
ACCESSOIRES FENETRES > VOIRE HARDWARE CONFIGURATOR
WINDOW GEAR > SEE HARDWARE CONFIGURATOR
FENSTERBESCHLAG > SIEHE HARDWARE CONFIGURATOR

Ramen-Fenêtres-Windows-Fenster		
	MIN	MAX
FB	790	1680
FH	930	2380
FG	Max. 160 kg	

Ramen-Fenêtres-Windows-Fenster		
	MIN	MAX
FB	1280	2000
FH	930	2700
FG	Max. 200 kg	

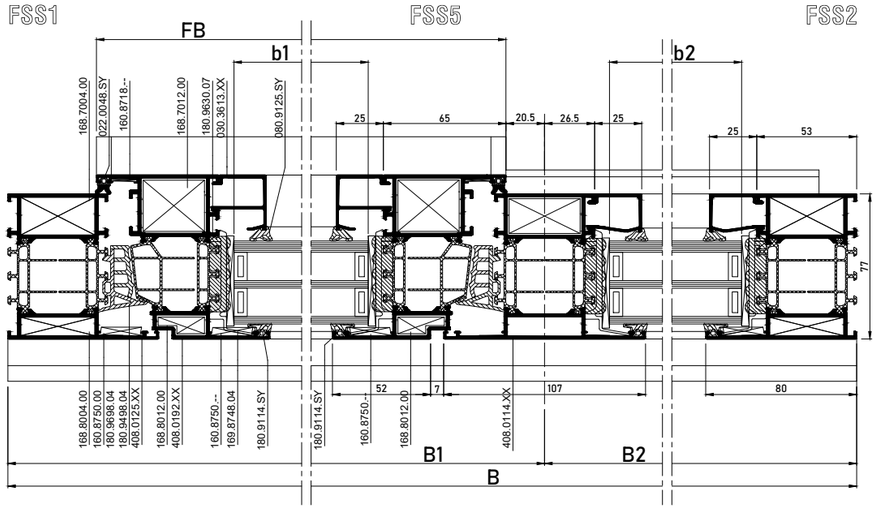

SECTIONS MASTERLINE 8-Fu

FRONT SLIDE

MASTERLINE 8-Fu

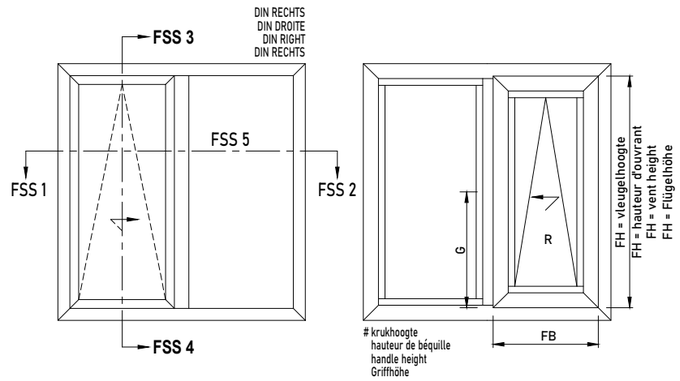

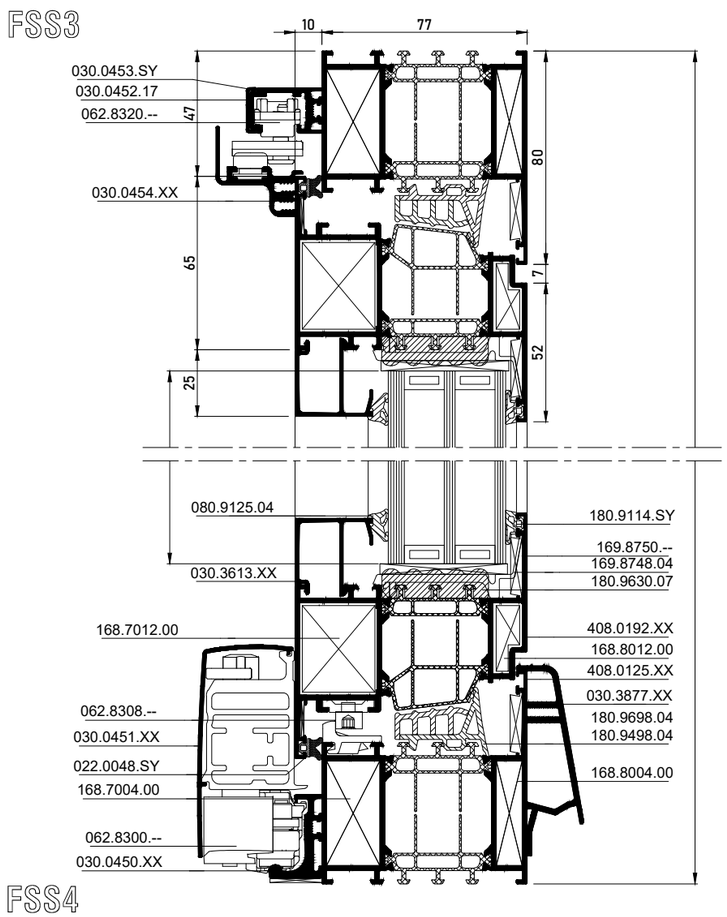

		#
168.8004.00		4
168.7004.00		4
168.7012.00		4
168.8012.00		4
168.8714.00		2
168.8688.04		4
160.8750.--		4
160.8718.--		4
169.8748.04		PROD STEPS
180.8204.04 of / ou / or / oder 022.0048.SY		(2XB1)+(2XH)
		(2XB1)+(2XH)
180.9114.SY		(2xb1) + (2xh1)
		(2xb2) + (2xh2)
180.9698.04		(2xB1) + (2xH)
180.9498.04		4
180.9630.07		2xB1
		2xB2
		4xH
080.9125.04		(2xb1) + (2xh1)
		(2xb2) + (2xh2)
052.5317.--		1/300mm

	097.0149.00 097.0150.00 097.0160.00

FRONT SLIDE RAAMBESLAG > ZIE HARDWARE CONFIGURATOR
FRONT SLIDE ACCESOIRES FENETRE > VOIR HARDWARE CONFIGURATOR
FRONT SLIDE WINDOW GEAR >SEE HARDWARE CONFIGURATOR
FRONT SLIDE FENSTERBESCHLAG > SEHE HARDWARE CONFIGURATOR

SECTIONS MASTERLINE 8-Fu

FRONT SLIDE

MASTERLINE 8-Fu

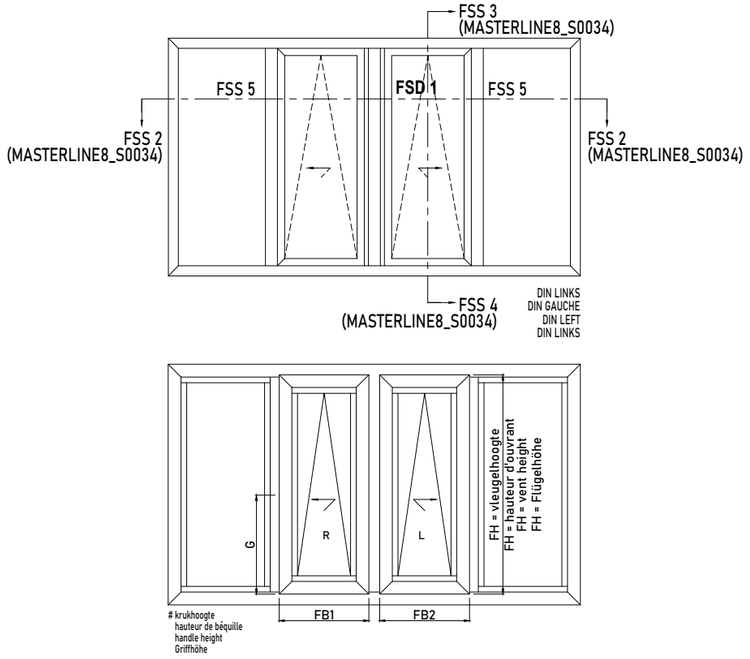

FSD 1

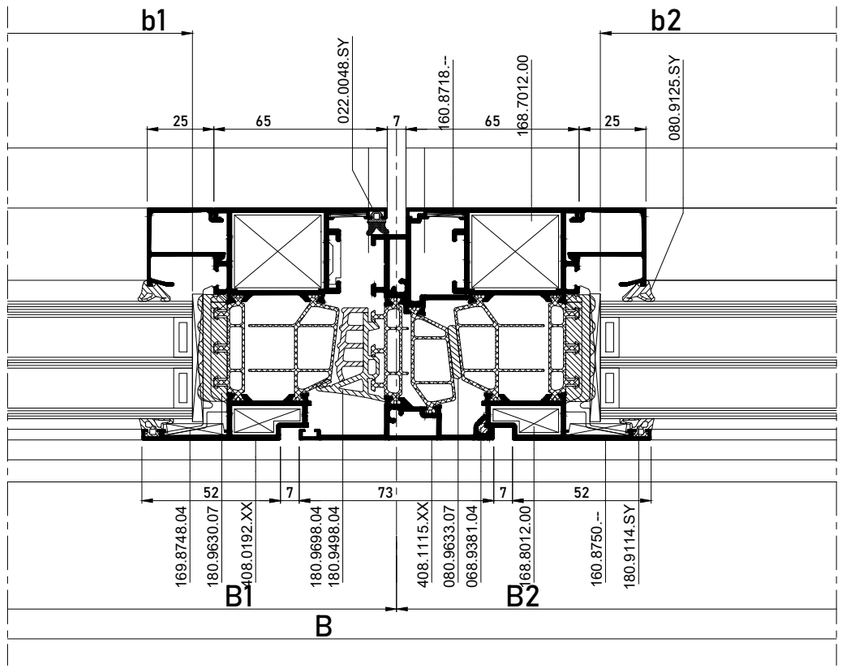

			#	Lm
408.0125.XX			2	B
			2	H
408.0192.XX			2	B1 - 24
			2	B2 - 24
			4	H - 94
408.0114.XX			2	H -106
408.1115.XX			1	H -178
030.3877.XX			1	B
030.3610.XX			2	B3 - 79.5
			2	B4 - 79.5
			4	H -156
030.3613.XX			2	B1 -154
			2	B2 - 154
			4	H - 274

b1 = B1- 170
h1 = H - 240
b2 = B2 - 170
h2 = H - 122
b3 = B3- 95.5
b4 = B4 - 95.5

50mm
ZIE BEGLAZINGSMETHODE
VOIR METHODE DE VITRAGE
SEE GLAZING METHOD
ZIE VERGLASUNGSWEISE

160 kg

030.0450.AN			1	B - 94
030.0452.17			1	B - 102
030.0453.SY			1	B - 102
030.0451.XX			1	FB - 98
030.0454.XX			1	FB - 8
030.0460.--			1	FB - 736
001.0075.17			-	-

200 kg

030.0450.AN			1	B - 94
030.0452.17			1	B - 102
030.0453.SY			1	B - 102
030.0451.XX			1	FB - 98
030.0454.XX			1	FB - 8
030.0460.--			1	FB - 1194
001.0075.17			-	-

		#
160.8750.00		12
168.8004.00		4
168.7004.00		4
168.7012.00		8
168.8012.00		8
168.8714.00		4
168.8688.04		8
160.8750.--		8
160.8718.--		8
169.8748.04		19H.F. ...
180.8204.04		(2XB1)+(2XB2) +(3XH)
of / ou / or / oder		
022.0048.SY		(2XB1)+(2XB2) +(3XH)
180.9114.SY		(2xb1) + (2xb2)
		(2xb3) + (2xb4)
		(4xh1) + (4xh2)
180.9698.04		(2xB1) + (2xB2)
		(3xH)
180.9498.04		8
180.9630.07		(2xB1) + (2xB2)
		(2xB3) + (2xB4)
		(8xH)
080.9125.SY		(2xb1) + (2xb2)
		(2xb3) + (2xb4)
		(4xh1) + (4xh2)
052.5317.--		1/300mm
169.6897.SY		1
052.5318.--		2
052.5327.--		2

SECTIONS MASTERLINE 8-Fu Balcony Door

BALCONY DOOR SINGLE INWARD OPENING

MASTERLINE 8-Fu

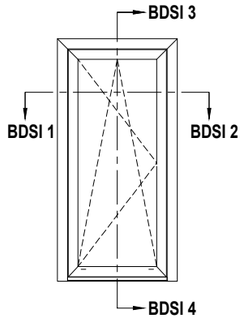

			#	Lm
408.0183.XX			1	B
			1	H
			1	H
408.0112.XX			2	B - 54
			2	H - 33
030.3613.XX			2	B - 214
			2	H - 243
408.0866.XX			1	B - 66
408.0052.XX			1	B - 138
408.0894.XX			1	B

b = B - 230
h = H - 209

50mm
ZIE BEGLAZINGSMETHODE
VOIR METHODE DE VITRAGE
SEE GLAZING METHOD
ZIE VERGLASUNGSWEISE

		#
168.7002.00		2
168.8002.00		2
168.7013.00		4
168.8013.00		4
160.8750.--		6
160.8718.--		4
168.8712.00		2
168.8732.00		2
068.9937.--		2
169.8748.04		PROD STEPS
069.6831.XX		PROD STEPS
180.8204.04 of / ou / or / oder 022.0048.SY		(2XB)+(2XH)
		(2XB)+(2XH)
180.9445.04 (*)		B+(2xH)
180.9114.SY		(2xb)+(2xh)
180.9698.04		B+(2xH)
180.9498.04		2
180.9701.04		B
180.9702.04		B
180.9630.07		(2xB)+(2xH)
080.9125.SY		(2xb)+(2xh)
169.8380.04		1
169.6973.04		1
081.9123.SY		B
052.5200.--		B/300
052.5327.--		B/300

OPTIE / OPTION (*)

RAAMBESLAG > ZIE HARDWARE CONFIGURATOR
ACCESSOIRES FENETRES > VOIRE HARDWARE CONFIGURATOR
WINDOW GEAR > SEE HARDWARE CONFIGURATOR
FENSTERBESCHLAG > SIEHE HARDWARE CONFIGURATOR

RAAMDEURBESLAG > ZIE HARDWARE CONFIGURATOR
ACCESSOIRES PORTES FENETRES > VOIRE HARDWARE CONFIGURATOR
WINDOW-DOOR GEAR > SEE HARDWARE CONFIGURATOR
ZUBEHOR FENSTERTUEREN > SIEHE HARDWARE CONFIGURATOR

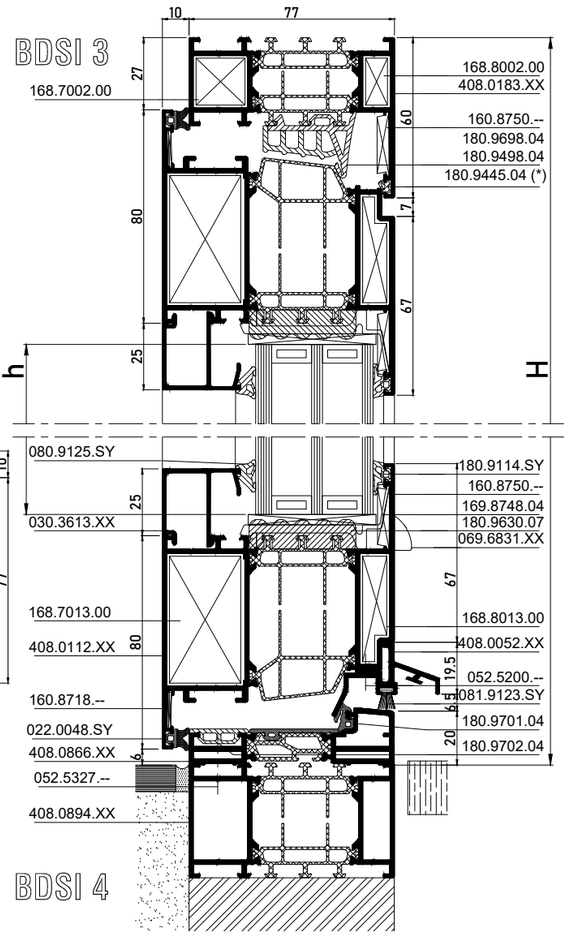

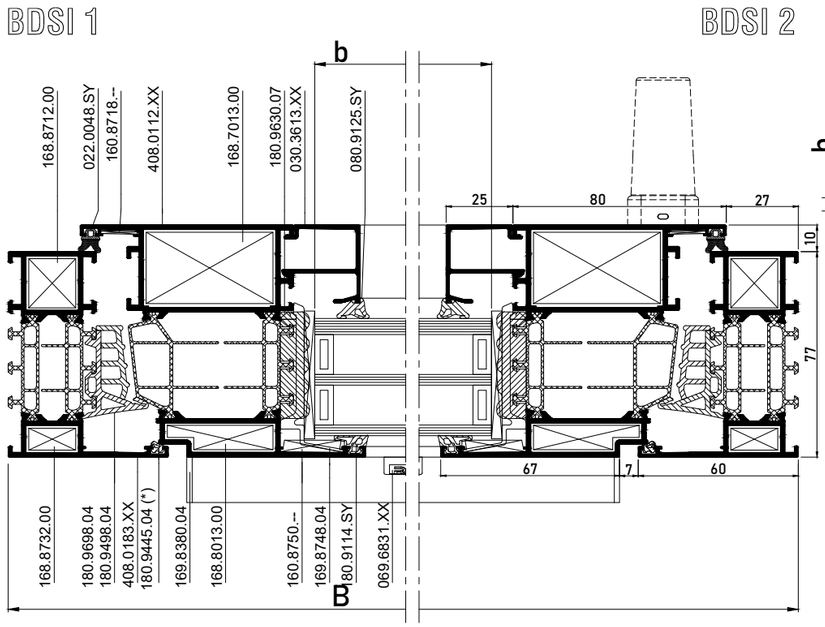

SECTIONS MASTERLINE 8-Fu Balcony Door

BALCONY DOOR SINGLE INWARD OPENING - VARIANT

MASTERLINE 8-Fu

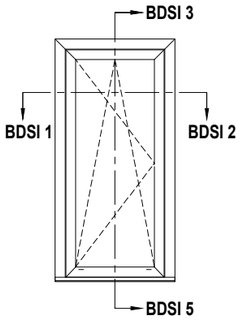

			#	Lm
408.0183.XX			1	B
			1	H
			1	H
408.0112.XX			2	B - 54
			2	H - 33
030.3613.XX			2	B - 214
			2	H - 243
408.0866.XX			1	B - 66
408.0052.XX			1	B - 138
408.0894.XX			1	B
408.0183.XX			1	B
			1	H - 12
			1	H - 12
408.0866.XX			1	B

b = B - 230
h = H - 209

50mm
ZIE BEGLAZINGSMETHODE
VOIR METHODE DE VITRAGE
SEE GLAZING METHOD
ZIE VERGLASUNGSWEISE

		#
168.7002.00		2
168.8002.00		2
168.7013.00		4
168.8013.00		4
160.8750.--		6
160.8718.--		4
168.8712.00		2
168.8732.00		2
068.9937.--		2
169.8748.04		PROD STEPS
069.6831.XX		PROD STEPS
180.8204.04 of / ou / or / oder 022.0048.SY		(2XB)+(2XH)
		(2XB)+(2XH)
180.9445.04 (*)		B+(2xH)
180.9114.SY		(2xb)+(2xh)
180.9698.04		B+(2xH)
180.9498.04		2
180.9701.04		B
180.9702.04		B
180.9630.07		(2xB)+(2xH)
080.9125.SY		(2xb)+(2xh)
169.8380.04		1
169.6973.04		1
081.9123.SY		B
052.5200.--		B/300
052.5327.--		B/300

OPTIE / OPTION (*)

RAAMBESLAG > ZIE HARDWARE CONFIGURATOR
ACCESSOIRES FENETRES > VOIRE HARDWARE CONFIGURATOR
WINDOW GEAR > SEE HARDWARE CONFIGURATOR
FENSTERBESCHLAG > SIEHE HARDWARE CONFIGURATOR

RAAMDEURBESLAG > ZIE HARDWARE CONFIGURATOR
ACCESSOIRES PORTES FENETRES > VOIRE HARDWARE CONFIGURATOR
WINDOW-DOOR GEAR > SEE HARDWARE CONFIGURATOR
ZUBEHOR FENSTERTUEREN > SIEHE HARDWARE CONFIGURATOR

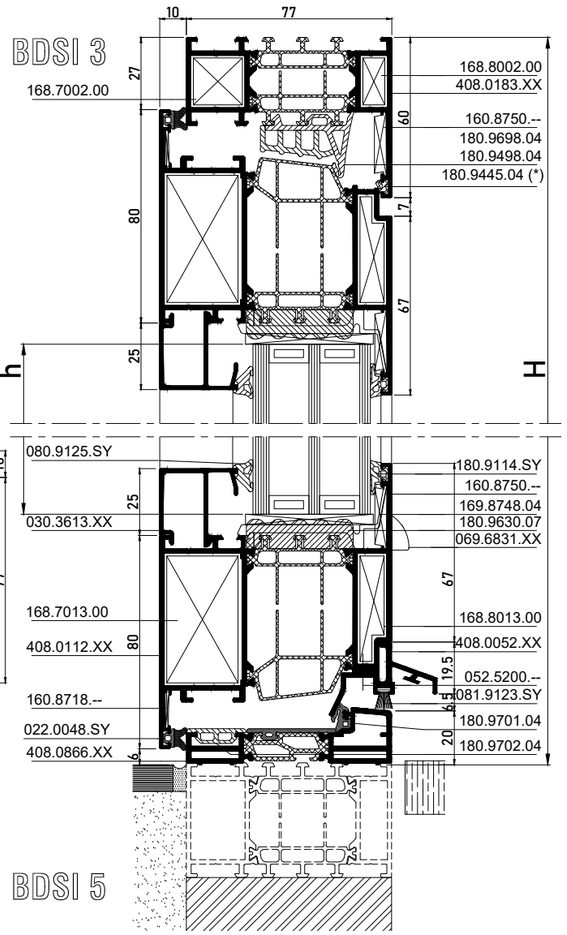

SECTIONS MASTERLINE 8-Fu Balcony Door

BALCONY DOOR DOUBLE CASEMENT INWARD OPENING

MASTERLINE 8-Fu

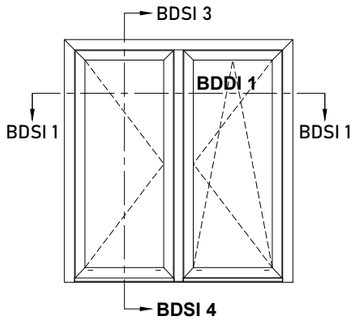

			#	Lm
408.0183.XX			1	B
			1	H
			1	H
408.0112.XX			2	B1 - 30.5
			2	B2 - 30.5
			4	H - 33
408.1115.XX			1	H - 100
030.3613.XX			2	B1 - 190.5
			2	B2 - 190.5
			4	H - 243
408.0866.XX			1	B - 66
408.0052.XX			1	B1 - 114.5
			1	B2 - 114.5
408.0894.XX			1	B

b1 = B1-206.5
b2 = B2-206.5
h = H - 209

50mm ZIE BEGLAZINGSMETHODE
VOIR METHODE DE VITRAGE
SEE GLAZING METHOD
ZIE VERGLASUNGSWEISE

OPTIE / OPTION (*)

RAAMBESLAG > ZIE "OPENING WINDOWS"
ACCESSOIRES FENETRES > VOIRE "OPENING WINDOWS"
WINDOW GEAR > SEE "OPENING WINDOWS"
FENSTERBESCHLAG > SIEHE "OPENING WINDOWS"

RAAMDEURBESLAG > ZIE "OPENING DOORS"
ACCESSOIRES PORTES FENETRES > VOIRE "OPENING DOORS"
WINDOW-DOOR GEAR > SEE "OPENING DOORS"
ZUBEHOR FENSTERTUEREN > SIEHE "OPENING DOORS"

	#
168.7002.00	2
168.8002.00	2
168.7013.00	8
168.8013.00	8
160.8750.--	10
160.8718.--	8
168.8712.00	2
168.5000.00	4
168.8732.00	2
068.9937.--	2
169.8748.04	19H.F. ...
069.6831.XX	19H.F. ...
180.8204.04	(2XB)+(3xH)
of / ou / or / oder	
022.0048.SY	(2XB)+(3xH)
180.9114.SY	(4xb)+(4xh)
180.9698.04	(1xB)+(3xH)
180.9498.04	2
180.9701.04	B
180.9702.04	B
180.9630.07	(4xB)+(4xH)
080.9125.SY	(4xb)+(4xh)
169.8380.04	1
169.6973.04	1
081.9123.SY	B
052.5200.--	B/300
052.5327.--	B/300

		#
052.5327.--		2
052.5318.--		2
169.6871.04		1
of / ou / or / oder		
169.6874.04		1

DIN R =
DIN L =

BDDI 1

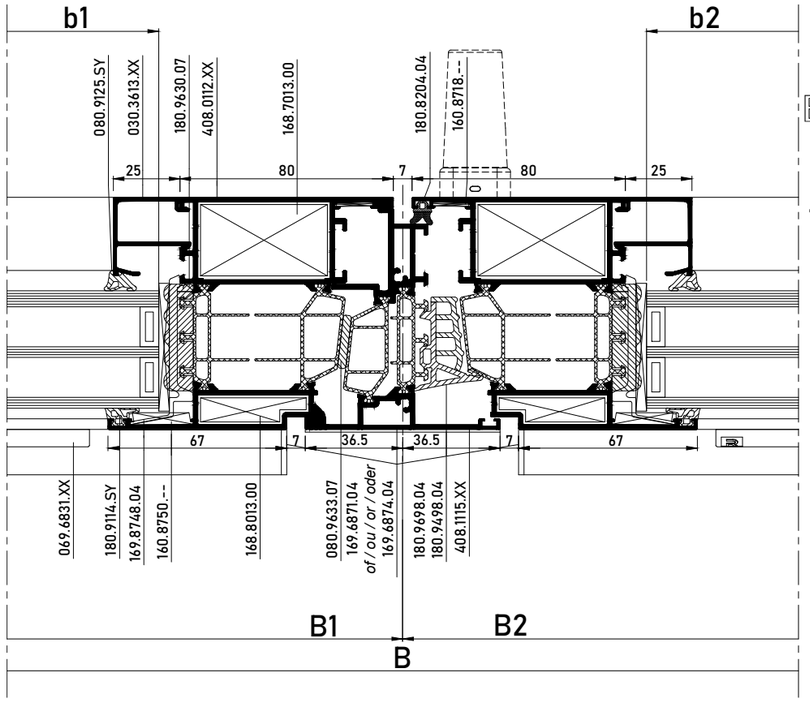

BDSI 4

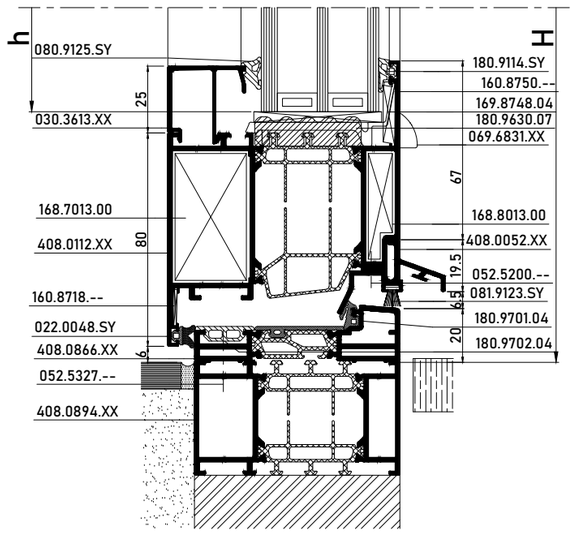

SECTIONS MASTERLINE 8-Fu Balcony Door

BALCONY DOOR DOUBLE INWARD OPENING - VARIANT

MASTERLINE 8-Fu

BDDI 1

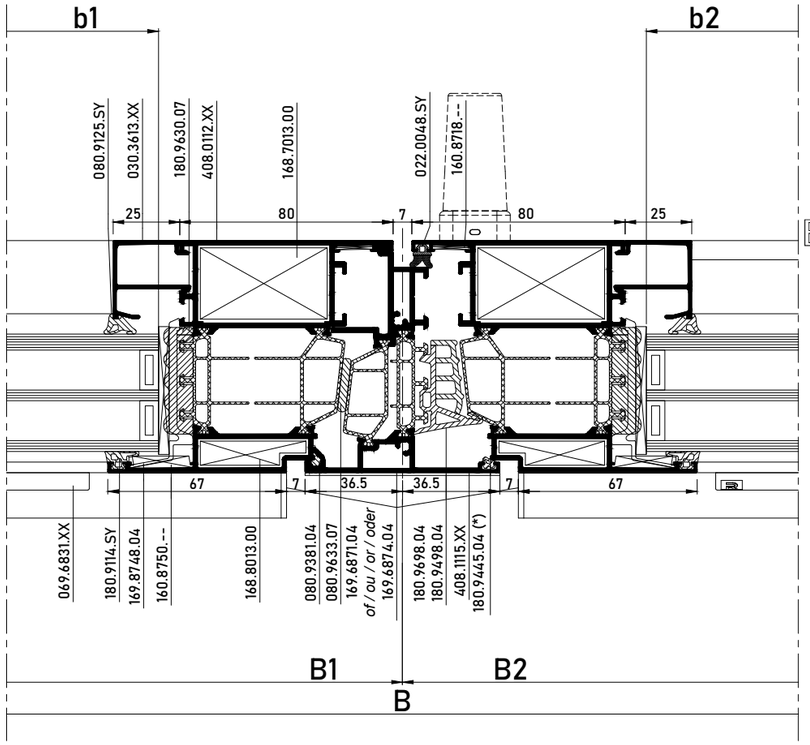

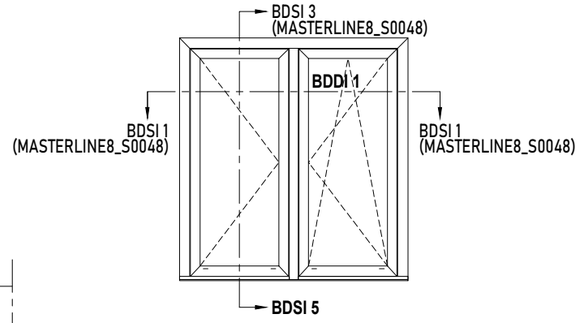

BDSI 5

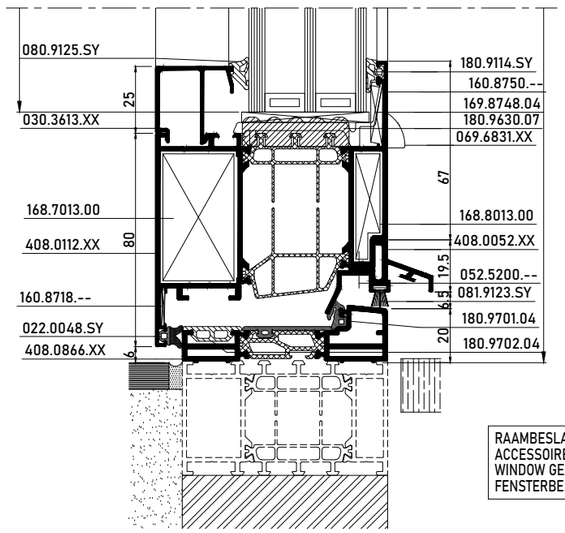

			#	Lm
408.0183.XX			1	B
			1	H
			1	H
408.0112.XX			2	B1 - 30.5
			2	B2 - 30.5
			4	H - 33
408.1115.XX			1	H - 100
030.3613.XX			2	B1 - 190.5
			2	B2 - 190.5
			4	H - 243
408.0866.XX			1	B - 66
408.0052.XX			1	B1 - 114.5
			1	B2 - 114.5
408.0894.XX			1	B
408.0183.XX			1	B
			1	H - 12
			1	H - 12
408.0866.XX			1	B

		#
168.7002.00		2
168.8002.00		2
168.7013.00		8
168.8013.00		8
160.8750.--		10
160.8718.--		8
168.8712.00		2
168.5000.00		4
168.8732.00		2
068.9937.--		2
169.8748.04		19H.F. ...
069.6831.XX		19H.F. ...
180.8204.04 of / ou / or / oder 022.0048.SY		(2xB)+(3xH)
180.9114.SY		(4xb)+(4xh)
180.9698.04		(1xB)+(3xH)
180.9498.04		2
180.9701.04		B
180.9702.04		B
180.9630.07		(4xB)+(4xH)
080.9125.SY		(4xb)+(4xh)
169.8380.04		1
169.6973.04		1
081.9123.SY		B
052.5200.--		B/300
052.5327.--		B/300

b1 = B1 - 206.5
b2 = B2 - 206.5
h = H - 209

OPTIE / OPTION (*)

50mm
ZIE BEGLAZINGSMETHODE
VOIR METHODE DE VITRAGE
SEE GLAZING METHOD
ZIE VERGLASUNGSWEISE

		#
052.5327.--		2
052.5318.--		2
169.6871.04 of / ou / or / oder 169.6874.04		1
		1

DIN R =
DIN L =

RAAMBESLAG > ZIE "OPENING WINDOWS"
ACCESSOIRES FENETRES > VOIRE "OPENING WINDOWS"
WINDOW GEAR > SEE "OPENING WINDOWS"
FENSTERBESCHLAG > SIEHE "OPENING WINDOWS"

RAAMDEURBESLAG > ZIE "OPENING DOORS"
ACCESSOIRES PORTES FENETRES > VOIRE "OPENING DOORS"
WINDOW-DOOR GEAR > SEE "OPENING DOORS"
ZUBEHOR FENSTERTUEREN > SIEHE "OPENING DOORS"

SECTIONS MASTERLINE 8-Fu Balcony Door

COMBINED BALCONY DOOR INWARD OPENING

MASTERLINE 8-Fu

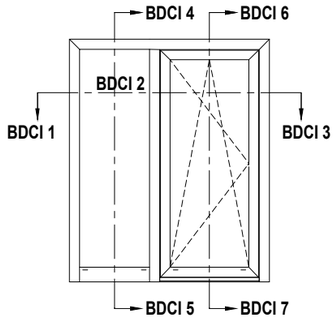

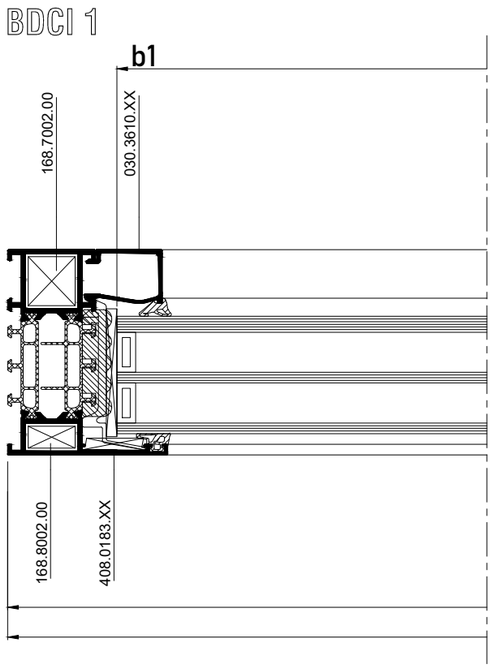

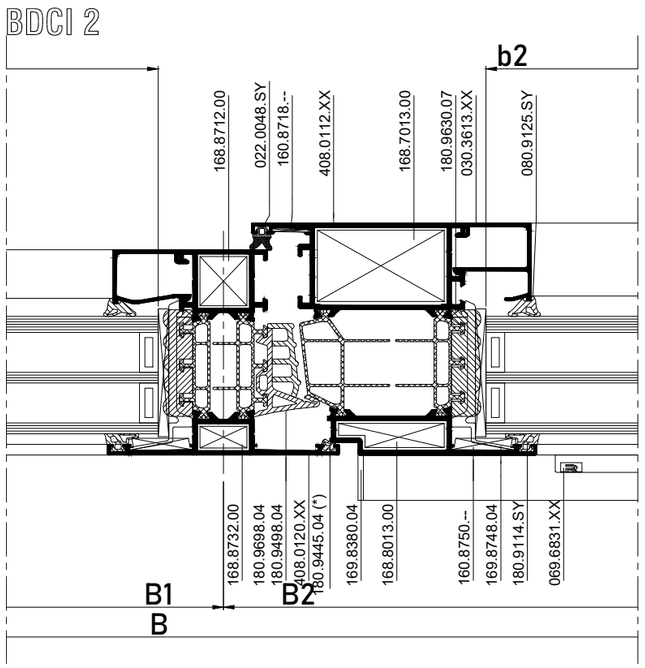

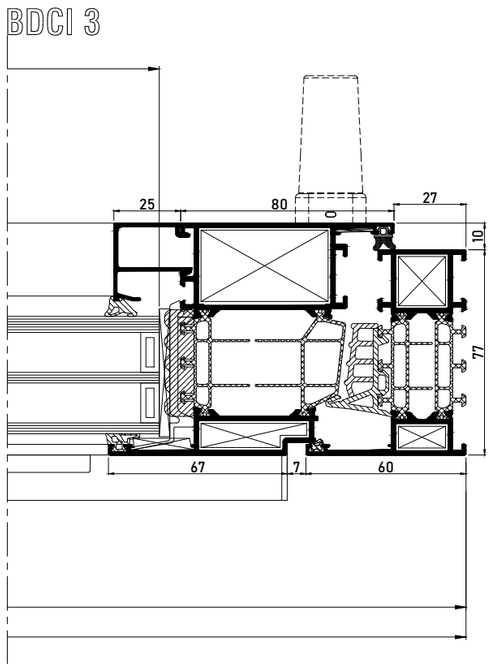

			#	Lm
408.0183.XX			1	B
			1	H2
			1	H1
408.1142.XX			1	B1 - 49.5
408.0120.XX			1	H2 - 33
408.0112.XX			2	B2 - 37.5
			2	H2 - 33
030.3613.XX			2	B2 - 197.5
			2	H2 - 243
030.3610.XX			2	B1 - 49.5
			2	H1 - 169
408.0866.XX			1	B2 - 49.5
408.0052.XX			1	B2 - 121.5
408.0894.XX			1	B

b1 = B1 - 65.5
h1 = H1 - 135
b2 = B2 - 213.5
h2 = H2 - 209

50mm
ZIE BEGLAZINGSMETHODE
VOIR METHODE DE VITRAGE
SEE GLAZING METHOD
ZIE VERGLASUNGSWEISE

OPTIE / OPTION (*)

RAAMBESLAG > ZIE HARDWARE CONFIGURATOR
ACCESSOIRES FENETRES > VOIRE HARDWARE CONFIGURATOR
WINDOW GEAR > SEE HARDWARE CONFIGURATOR
FENSTERBESCHLAG > SIEHE HARDWARE CONFIGURATOR

RAAMDEURBESLAG > ZIE HARDWARE CONFIGURATOR
ACCESSOIRES PORTES FENETRES > VOIRE HARDWARE CONFIGURATOR
WINDOW-DOOR GEAR > SEE HARDWARE CONFIGURATOR
ZUBEHOR FENSTERTUEREN > SIEHE HARDWARE CONFIGURATOR

	#
168.7002.00	2
168.8002.00	2
168.7013.00	4
168.8013.00	4
160.8750.--	10
160.8718.--	4
168.8712.00	8
168.8742.00	5
168.5012.--	5
168.8732.00	3
068.9937.--	3
169.8748.04	PROD STEPS
069.6831.XX	PROD STEPS
180.8204.04 of / ou / or / oder 022.0048.SY	(2XB2)+(2XH2)
	(2XB2)+(2XH2)
180.9445.04 (*)	B2+(2xH2)
180.9114.SY	(2Xb1)+(2Xh1)
	(2Xb2)+(2Xh2)
180.9698.04	B2+(2xH2)
180.9498.04	2
180.9701.04	B2
180.9702.04	B2
080.9637.04	2XB1
180.9630.07	(2XB1)+(2XH1)
	(2XB2)+(2XH2)
080.9125.SY	(2Xb1)+(2Xh1)
	(2Xb2)+(2Xh2)
169.8380.04	1
169.6973.04	1
081.9123.SY	B2
052.5200.--	B2/300
052.5327.--	B2/300
052.5315.--	B1/300
052.5329.--	B1/300

BDCI 4

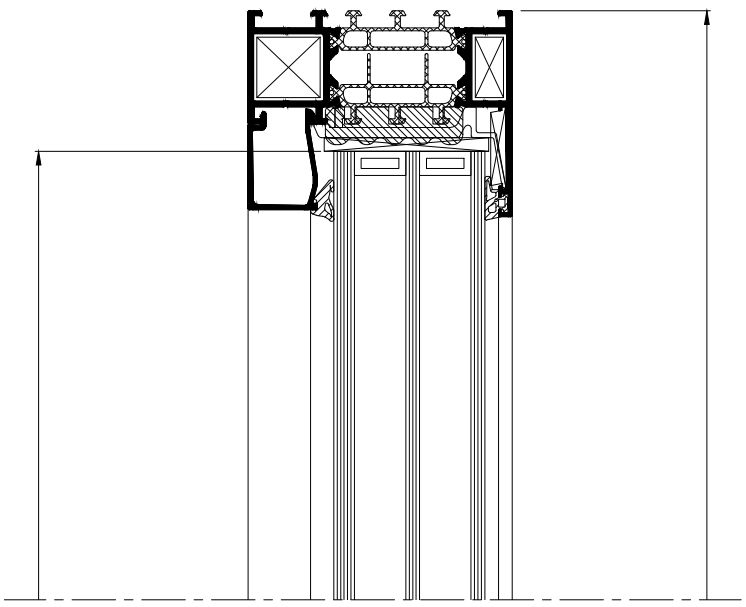

BDCI 6

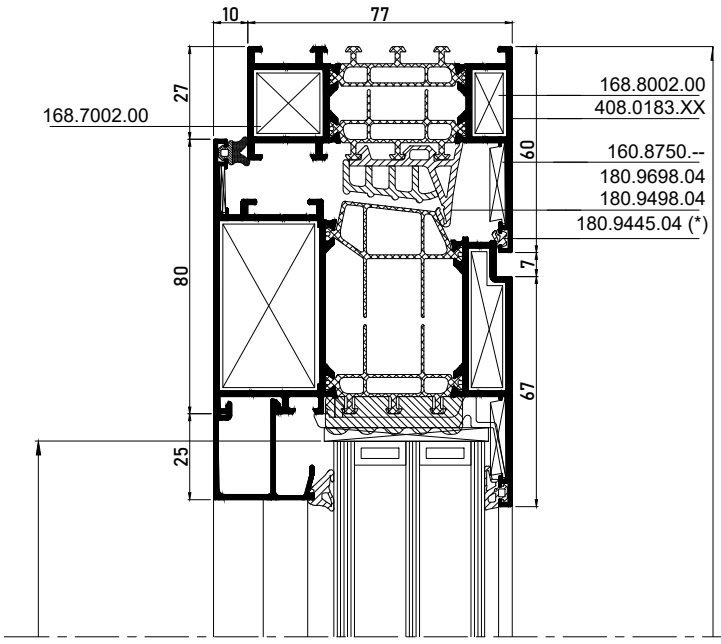

BDCI 5

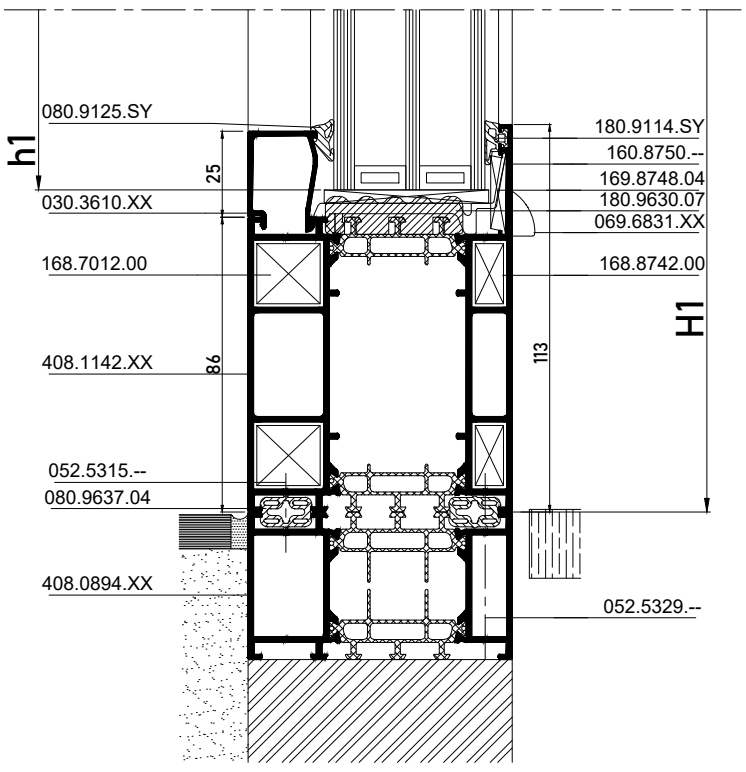

BDCI 7

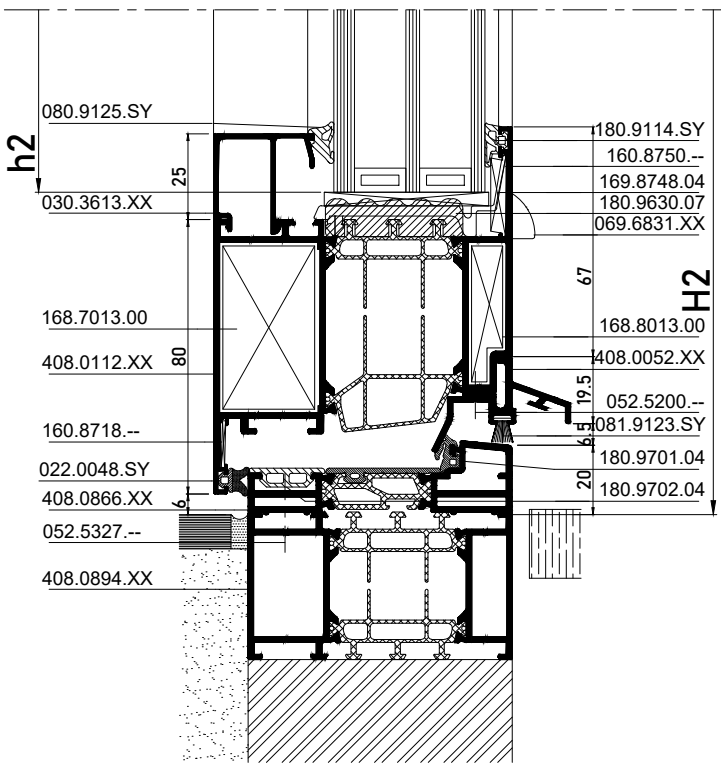

SECTIONS MASTERLINE 8-Fu Balcony Door

COMBINED BALCONY DOOR INWARD OPENING - VARIANT

MASTERLINE 8-Fu

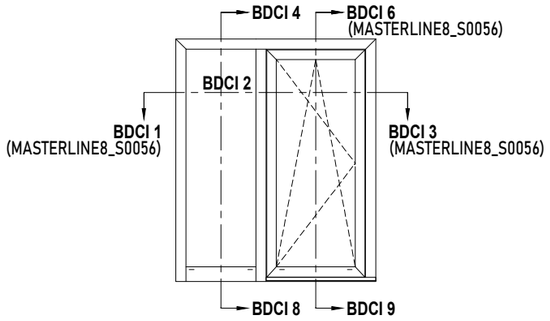

OPTIE / OPTION (*)

RAAMBESLAG > ZIE "HARDWARE CONFIGURATOR"
ACCESSOIRES FENETRES > VOIRE "HARDWARE CONFIGURATOR"
WINDOW GEAR > SEE "HARDWARE CONFIGURATOR
FENSTERBESCHLAG > SIEHE "HARDWARE CONFIGURATOR"

RAAMDEURBESLAG > ZIE HARDWARE CONFIGURATOR
ACCESSOIRES PORTES FENETRES > VOIRE HARDWARE CONFIGURATOR
WINDOW-DOOR GEAR > SEE HARDWARE CONFIGURATOR
ZUBEHOR FENSTERTUEREN > SIEHE HARDWARE CONFIGURATOR

b1 = B1 - 65.5
h1 = H1 - 135
b2 = B2 - 213.5
h2 = H2 - 209

50mm
ZIE BEGLAZINGSMETHODE
VOIR METHODE DE VITRAGE
SEE GLAZING METHOD
ZIE VERGLASUNGSWEISE

	#	Lm
408.0183.XX	1	B
	1	H2
	1	H1
408.1142.XX	1	B1 - 49.5
408.0120.XX	1	H2 - 33
408.0112.XX	2	B2 - 37.5
	2	H2 - 33
030.3613.XX	2	B2 - 197.5
	2	H2 - 243
030.3610.XX	2	B1 - 49.5
	2	H1 - 169
408.0866.XX	1	B2 - 49.5
408.0052.XX	1	B2 - 121.5
408.0894.XX	1	B

	#	Lm
408.0183.XX	1	B
	1	H2 - 12
	1	H1
408.0120.XX	1	H2 - 45
408.0866.XX	1	B2 + 43.5

	#
168.7002.00	2
168.8002.00	2
168.7013.00	4
168.8013.00	4
160.8750.--	10
160.8718.--	4
169.8748.04	PROD STEPS
069.6831.XX	PROD STEPS
180.8204.04 of / ou / or / oder 022.0048.SY	(2XB2)+(2XH2)
	(2XB2)+(2XH2)
180.9445.04 (*)	B2+(2xH2)
180.9114.SY	(2Xb1)+(2Xh1)
	(2Xb2)+(2Xh2)
180.9698.04	B2+(2xH2)
180.9498.04	2
180.9701.04	B2
180.9702.04	B2
180.9630.07	(2XB1)+(2XH1)
	(2XB2)+(2XH2)
080.9125.SY	(2Xb1)+(2Xh1)
	(2Xb2)+(2Xh2)
169.8380.04	1
169.6973.04	1
081.9123.SY	B2
052.5200.--	B2/300
080.9637.04	2XB1
052.5327.--	B2/300
052.5315.--	B1/300
052.5329.--	B1/300
168.8712.00	8
168.8742.00	5
168.5012.--	5
168.8732.00	3
068.8937.--	6

	#
168.8712.00	6
168.8742.00	4
168.5012.--	4
168.8732.00	2
068.9937.--	2

BDCI 8

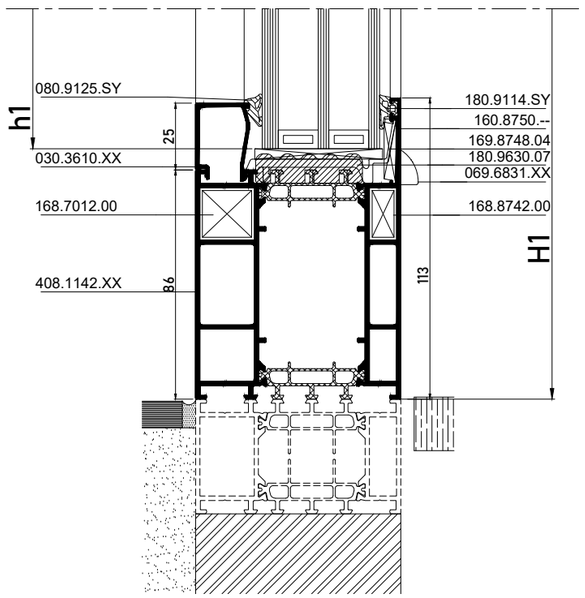

BDCI 9

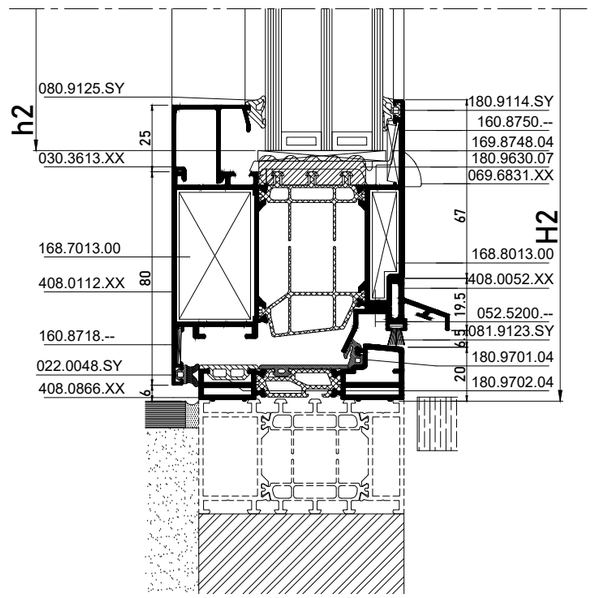

SECTIONS MASTERLINE 8-Fu Balcony Door

COMBINED BALCONY DOOR INWARD OPENING - VARIANT

MASTERLINE 8-Fu

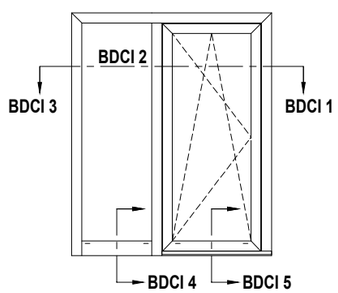

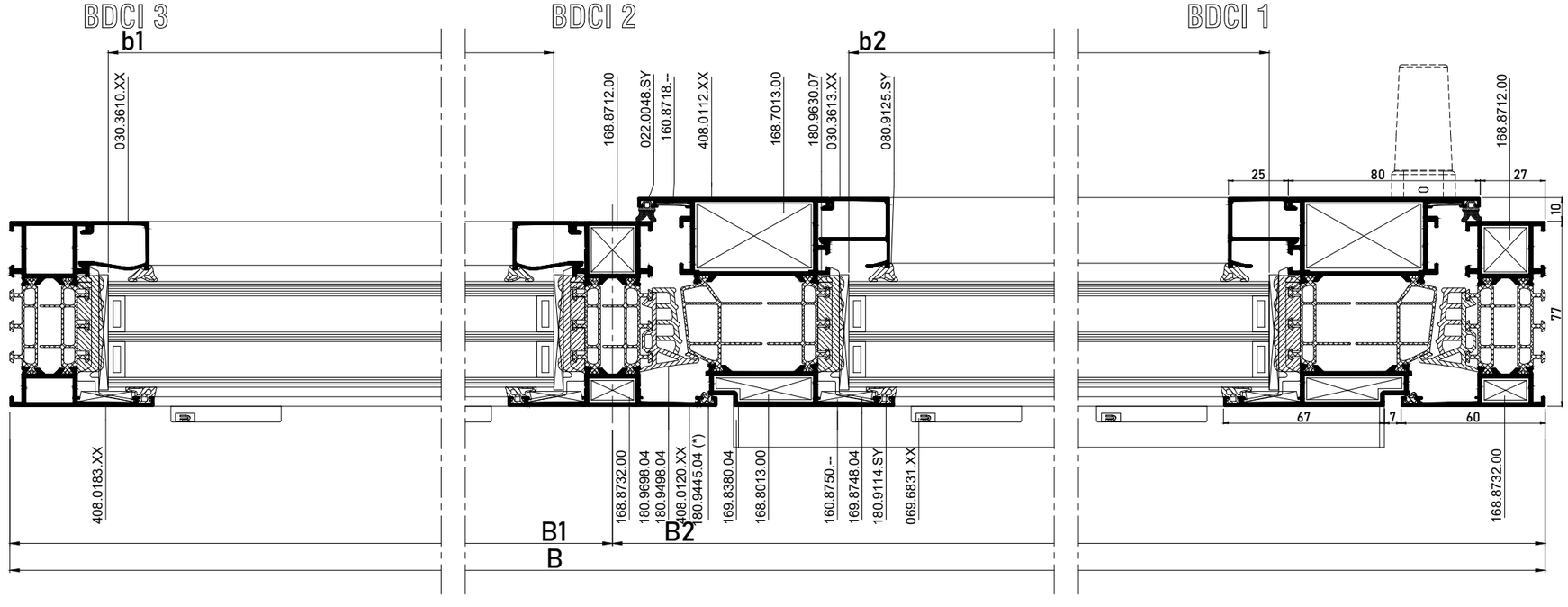

SECTIONS MASTERLINE 8-Fu Balcony Door

BALCONY DOOR SINGLE OUTWARD OPENING

MASTERLINE 8-Fu

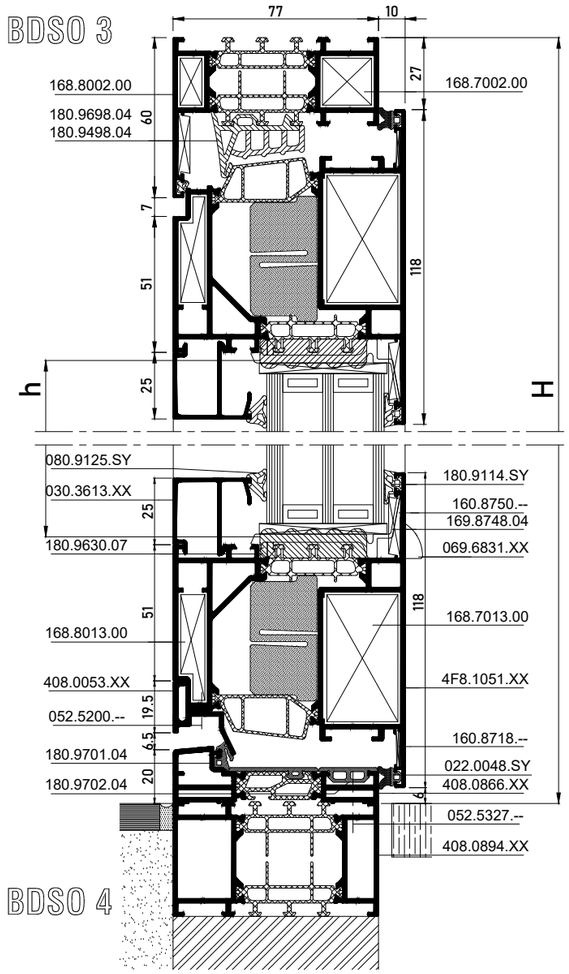

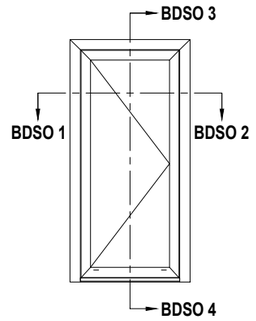

			#	Lm
408.0183.XX			1	B
			1	H
			1	H
4F8.1015.XX			2	B - 54
			2	H - 33
030.3613.XX			2	B - 236
			2	H - 265
408.0866.XX			1	B - 66
408.0053.XX			1	B - 138
408.0894.XX			1	B

b = B - 252
h = H - 231

50mm
ZIE BEGLAZINGSMETHODE
VOIR METHODE DE VITRAGE
SEE GLAZING METHOD
ZIE VERGLASUNGSWEISE

		#
168.7002.00		2
168.8002.00		2
168.7013.00		4
168.8013.00		4
160.8750.--		6
160.8718.--		4
168.8712.00		2
168.8732.00		2
068.9937.--		2
169.8748.04		PROD STEPS
069.6831.XX		PROD STEPS
180.8204.04 of / ou / or / oder 022.0048.SY		(2XB)+(2XH)
		(2XB)+(2XH)
180.9445.04 (*)		B+(2xH)
180.9114.SY		(2xb)+(2xh)
180.9698.04		B+(2xH)
180.9498.04		2
180.9701.04		B
180.9702.04		B
180.9630.07		(2xB)+(2xH)
080.9125.SY		(2xb)+(2xh)
169.8380.04		1
169.6973.04		1
052.5200.--		B/300
052.5327.--		B/300

OPTIE / OPTION (*)

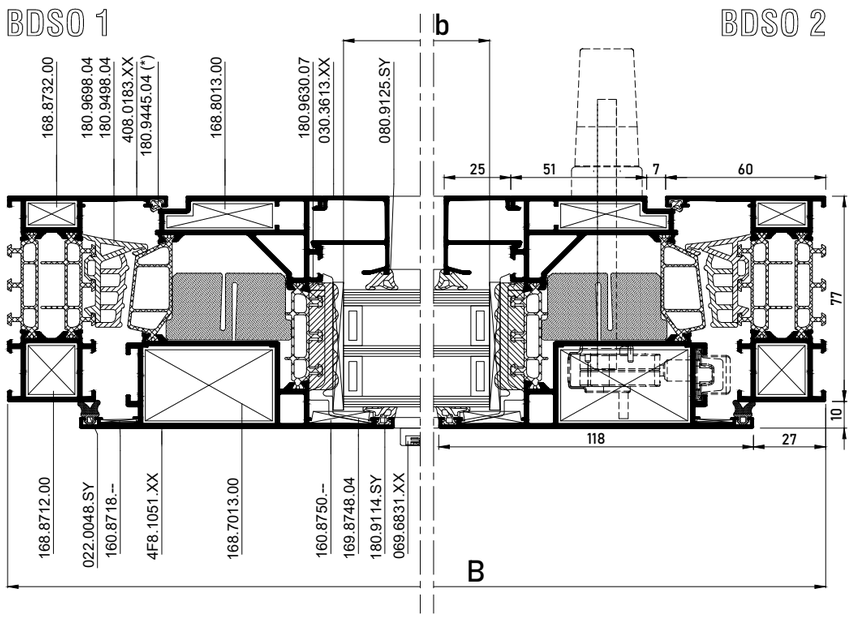

RAAMBESLAG > ZIE HARDWARE CONFIGURATOR
ACCESSOIRES FENETRES > VOIRE HARDWARE CONFIGURATOR
WINDOW GEAR > SEE HARDWARE CONFIGURATOR
FENSTERBESCHLAG > SIEHE HARDWARE CONFIGURATOR

RAAMDEURBESLAG > ZIE HARDWARE CONFIGURATOR
ACCESSOIRES PORTES FENETRES > VOIRE HARDWARE CONFIGURATOR
WINDOW-DOOR GEAR > SEE HARDWARE CONFIGURATOR
ZUBEHOR FENSTERTUEREN > SIEHE HARDWARE CONFIGURATOR

SECTIONS MASTERLINE 8-Fu Balcony Door

BALCONY DOOR SINGLE OUTWARD OPENING - VARIANT

MASTERLINE 8-Fu

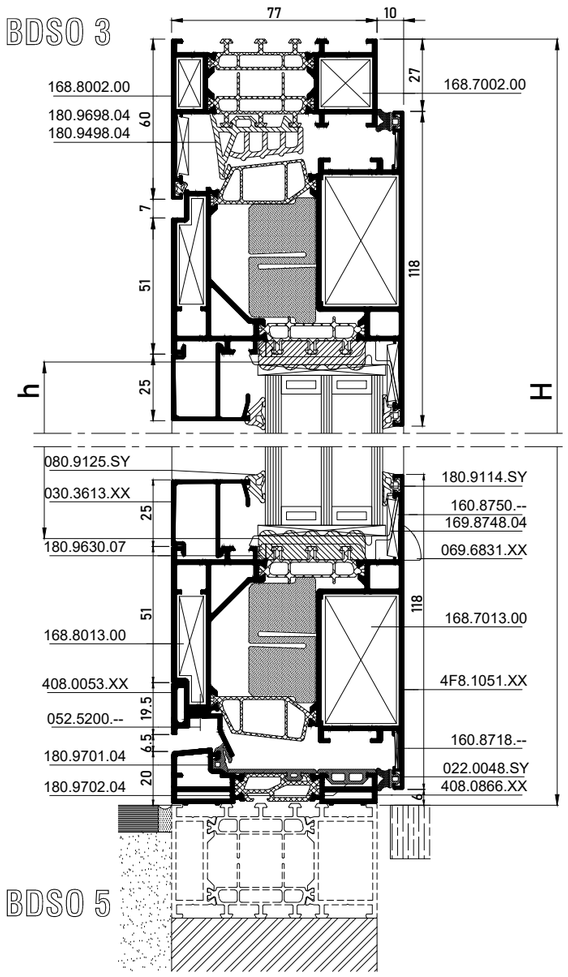

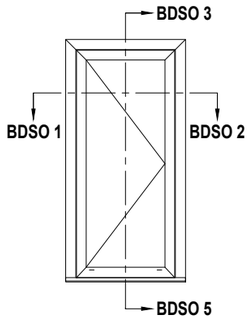

			#	Lm
408.0183.XX			1	B
			1	H
			1	H
4F8.1015.XX			2	B - 54
			2	H - 33
030.3613.XX			2	B - 236
			2	H - 265
408.0866.XX			1	B - 66
408.0053.XX			1	B - 138
408.0894.XX			1	B
408.0183.XX			1	B
			1	H - 12
			1	H - 12
408.0866.XX			1	B

b = B - 230
h = H - 209

ZIE BEGLAZINGSMETHODE
VOIR METHODE DE VITRAGE
SEE GLAZING METHOD
ZIE VERGLASUNGSWEISE
50mm

	#
168.7002.00	2
168.8002.00	2
168.7013.00	4
168.8013.00	4
160.8750.--	6
160.8718.--	4
168.8712.00	2
168.8732.00	2
068.9937.--	2
169.8748.04	PROD STEPS
069.6831.XX	PROD STEPS
180.8204.04 of / ou / or / oder 022.0048.SY	(2XB)+(2XH)
	(2XB)+(2XH)
180.9445.04 (*)	B+(2xH)
180.9114.SY	(2xb)+(2xh)
180.9698.04	B+(2xH)
180.9498.04	2
180.9701.04	B
180.9702.04	B
180.9630.07	(2xB)+(2xH)
080.9125.SY	(2xb)+(2xh)
169.8380.04	1
169.6973.04	1
052.5200.--	B/300
052.5327.--	B/300

OPTIE / OPTION (*)

RAAMBESLAG > ZIE HARDWARE CONFIGURATOR
ACCESSOIRES FENETRES > VOIRE HARDWARE CONFIGURATOR
WINDOW GEAR > SEE HARDWARE CONFIGURATOR
FENSTERBESCHLAG > SIEHE HARDWARE CONFIGURATOR

RAAMDEURBESLAG > ZIE HARDWARE CONFIGURATOR
ACCESSOIRES PORTES FENETRES > VOIRE HARDWARE CONFIGURATOR
WINDOW-DOOR GEAR > SEE HARDWARE CONFIGURATOR
ZUBEHOR FENSTERTUEREN > SIEHE HARDWARE CONFIGURATOR

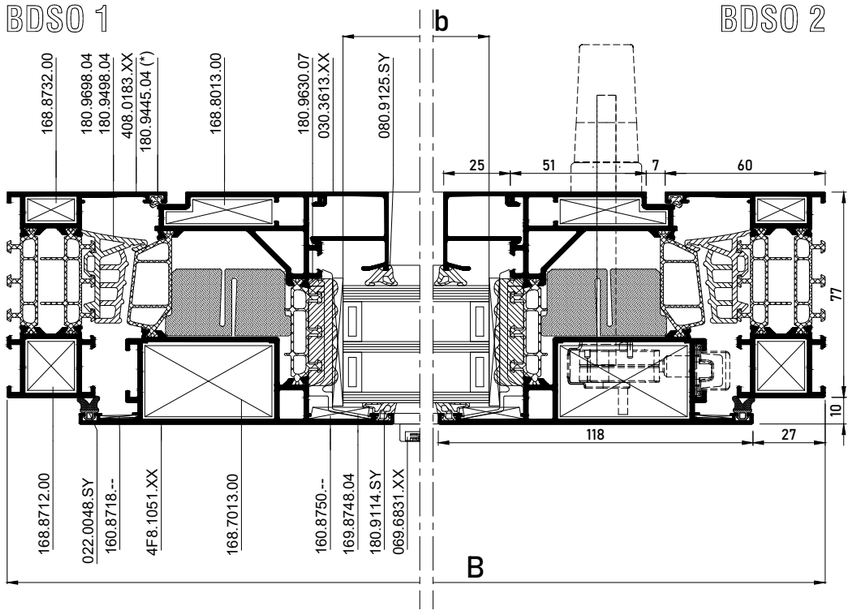

SECTIONS MASTERLINE 8-Fu Balcony Door

BALCONY DOOR DOUBLE CASEMENT OUTWARD OPENING

MASTERLINE 8-Fu

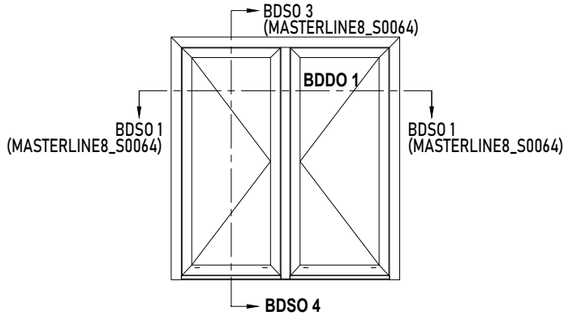

BDDO 1

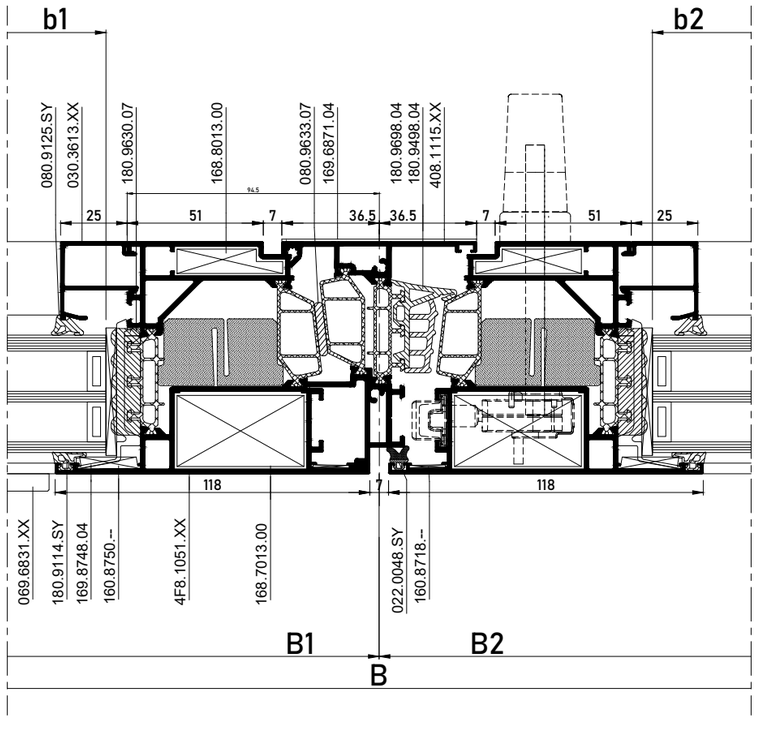

			#	Lm
408.0183.XX			1	B
			1	H
			1	H
4F8.1015.XX			2	B1 - 30.5
			2	B2 - 30.5
			4	H - 33
408.1115.XX			1	H - 100
030.3613.XX			2	B1 - 212.5
			2	B2 - 212.5
			4	H - 265
408.0866.XX			1	B - 66
408.0053.XX			1	B1 - 114.5
			1	B2 - 114.5
408.0894.XX			1	B

b1 = B1-228.5
b2 = B2-228.5
h = H - 231

50mm
ZIE BEGLAZINGSMETHODE
VOIR METHODE DE VITRAGE
SEE GLAZING METHOD
ZIE VERGLASUNGSWEISE

OPTIE / OPTION (*)

RAAMBESLAG > ZIE "OPENING WINDOWS"
ACCESSOIRES FENETRES > VOIRE "OPENING WINDOWS"
WINDOW GEAR > SEE "OPENING WINDOWS"
FENSTERBESCHLAG > SIEHE "OPENING WINDOWS"

RAAMDEURBESLAG > ZIE "OPENING DOORS"
ACCESSOIRES PORTES FENETRES > VOIRE "OPENING DOORS"
WINDOW-DOOR GEAR > SEE "OPENING DOORS"
ZUBEHOR FENSTERTUEREN > SIEHE "OPENING DOORS"

		#
168.7002.00		2
168.8002.00		2
168.7013.00		8
168.8013.00		8
160.8750.--		10
160.8718.--		8
168.8712.00		2
168.5000.00		4
168.8732.00		2
068.9937.--		2
169.8748.04		19H.F. ...
069.6831.XX		19H.F. ...
180.8204.04		(2XB)+(3XH)
of / ou / or / oder		
022.0048.SY		(2XB)+(3XH)
180.9114.SY		(4xb)+(4xh)
180.9698.04		B+(3xH)
180.9498.04		2
180.9701.04		B
180.9702.04		B
180.9630.07		(4xB)+(4xH)
080.9125.SY		(4xb)+(4xh)
169.8380.04		1
169.6973.04		1
052.5200.--		B/300
052.5327.--		B/300

BDSO 4

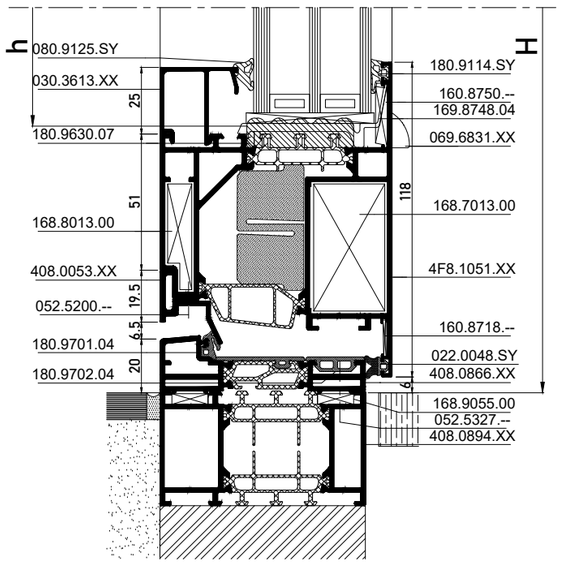

DIN R =
DIN L =

		#
052.5327.--		2
052.5318.--		2
169.6871.04		1
of / ou / or / oder		
169.6874.04		1

SECTIONS MASTERLINE 8-Fu Balcony Door

BALCONY DOOR DOUBLE OUTWARD OPENING - VARIANT

MASTERLINE 8-Fu

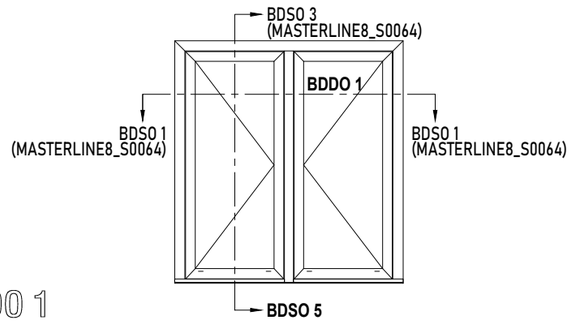

BDDO 1

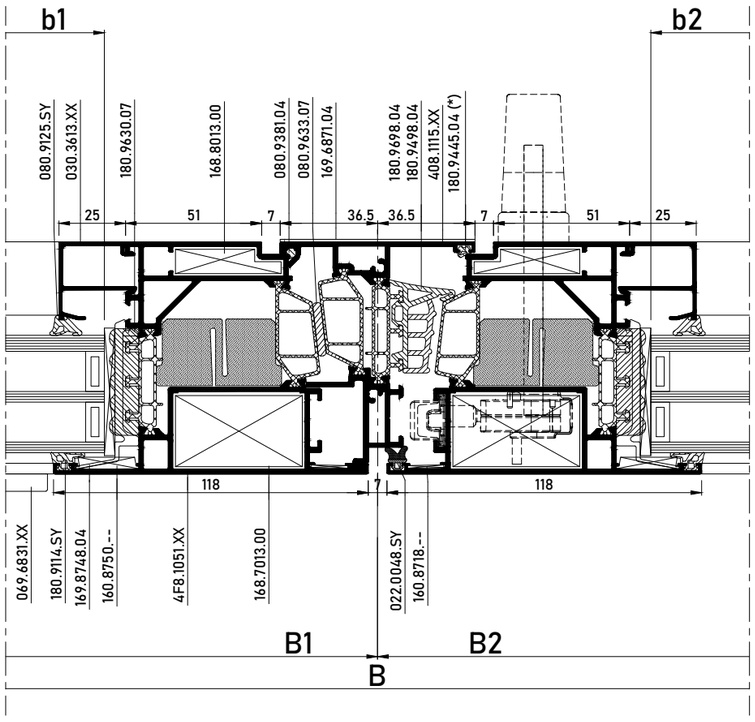

BDSO 5

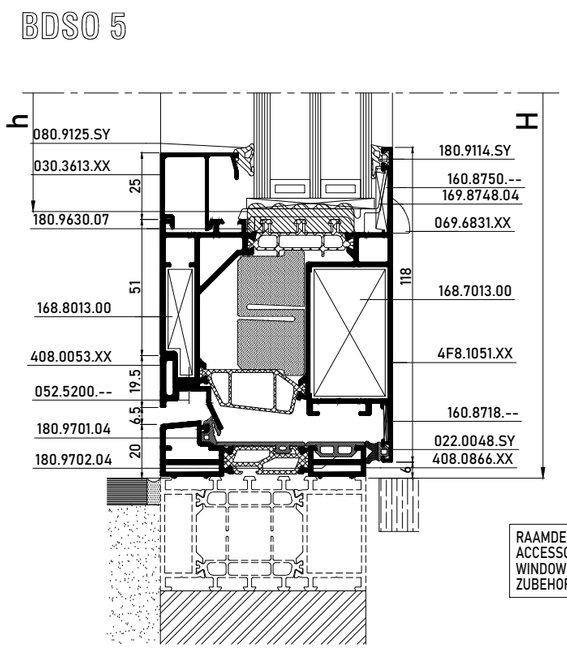

			#	Lm
408.0183.XX			1	B
			1	H
			1	H
4F8.1015.XX			2	B1 - 30.5
			2	B2 - 30.5
			4	H - 33
408.1115.XX			1	H - 100
030.3613.XX			2	B1 - 212.5
			2	B2 - 212.5
			4	H - 265
408.0866.XX			1	B - 66
408.0053.XX			1	B1 - 114.5
			1	B2 - 114.5
408.0894.XX			1	B
408.0183.XX			1	B
			1	H - 12
			1	H - 12
408.0866.XX			1	B

		#
168.7002.00		2
168.8002.00		2
168.7013.00		8
168.8013.00		8
160.8750.--		10
160.8718.--		8
168.8712.00		2
168.5000.00		4
168.8732.00		2
068.9937.--		2
169.8748.04		19H.F. ...
069.6831.XX		19H.F. ...
180.8204.04 of / ou / or / oder 022.0048.SY		(2XB)+(3XH)
		(2XB)+(3XH)
180.9114.SY		(4xb)+(4xh)
180.9698.04		B+(3xH)
180.9498.04		2
180.9701.04		B
180.9702.04		B
180.9630.07		(4xB)+(4xH)
080.9125.SY		(4xb)+(4xh)
169.8380.04		1
169.6973.04		1
052.5200.--		B/300
052.5327.--		B/300
052.5327.--		2
052.5318.--		2
169.6871.04 of / ou / or / oder 169.6874.04		1
		1

b1 = B1-228.5
b2 = B2-228.5
h = H - 231

50mm ZIE BEGLAZINGSMETHODE
VOIR METHODE DE VITRAGE
SEE GLAZING METHOD
ZIE VERGLASUNGSWEISE

OPTIE / OPTION (*)

DIN R =
DIN L =

RAAMDEURBESLAG > ZIE "OPENING DOORS"
ACCESSOIRES PORTES FENETRES > VOIRE "OPENING DOORS"
WINDOW-DOOR GEAR > SEE "OPENING DOORS"
ZUBEHOR FENSTERTUEREN > SIEHE "OPENING DOORS"

RAAMBESLAG > ZIE "OPENING WINDOWS"
ACCESSOIRES FENETRES > VOIRE "OPENING WINDOWS"
WINDOW GEAR > SEE "OPENING WINDOWS"
FENSTERBESCHLAG > SIEHE "OPENING WINDOWS"

SECTIONS MASTERLINE 8-Fu Balcony Door

COMBINED BALCONY DOOR OUTWARD OPENING

MASTERLINE 8-Fu

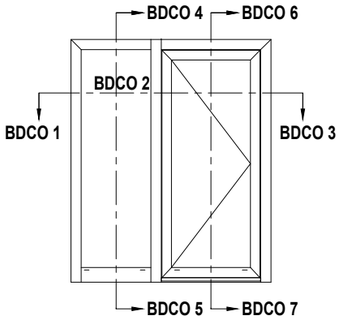

BDCO 1

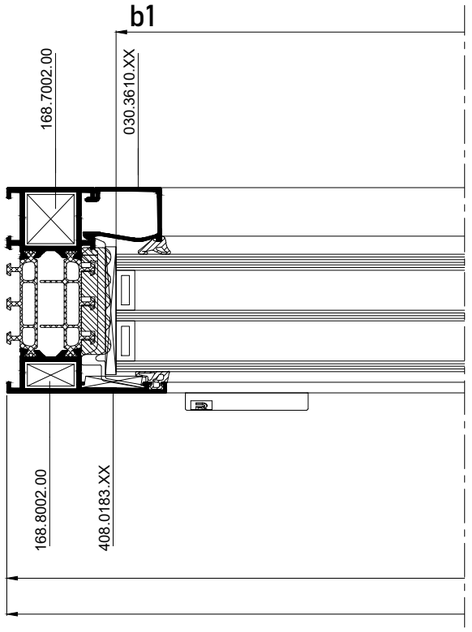

			#	Lm
408.0183.XX			1	B2 + 16.5
			1	B1 - 16.5
			1	H2
			1	H1
408.1142.XX			1	B1 - 49.5
408.0453.XX			1	H2
4F8.1015.XX			2	B2 - 37.5
			2	H2 - 33
030.3613.XX			2	B2 - 219.5
			2	H2 - 265
030.3610.XX			2	B1 - 49.5
			2	H1 - 169
408.0866.XX			1	B2 - 49.5
408.0053.XX			1	B2 - 121.5
408.0894.XX			1	B

b1 = B1 - 65.5
h1 = H1 - 135
b2 = B2 - 235.5
h2 = H2 - 231

ZIE BEGLAZINGSMETHODE
VOIR METHODE DE VITRAGE
SEE GLAZING METHOD
ZIE VERGLASUNGSWEISE

OPTIE / OPTION (*)

RAAMBESLAG > ZIE HARDWARE CONFIGURATOR
ACCESSOIRES FENETRES > VOIRE HARDWARE CONFIGURATOR
WINDOW GEAR > SEE HARDWARE CONFIGURATOR
FENSTERBESCHLAG > SIEHE HARDWARE CONFIGURATOR

RAAMDEURBESLAG > ZIE HARDWARE CONFIGURATOR
ACCESSOIRES PORTES FENETRES > VOIRE HARDWARE CONFIGURATOR
WINDOW-DOOR GEAR > SEE HARDWARE CONFIGURATOR
ZUBEHOR FENSTERTUEREN > SIEHE HARDWARE CONFIGURATOR

	#
168.7002.00	2
168.8002.00	2
168.7013.00	4
168.8013.00	4
160.8750.--	10
160.8718.--	4
168.8712.00	7
168.8742.00	6
168.5012.--	6
168.8732.00	1
068.9937.--	1
169.8748.04	PROD STEPS
069.6831.XX	PROD STEPS
180.8204.04 of / ou / or / oder 022.0048.SY	(2XB2)+(2XH2)
	(2XB2)+(2XH2)
180.9445.04 (*)	B2+(2xH2)
180.9114.SY	(2Xb1)+(2Xh1)
	(2Xb2)+(2Xh2)
180.9698.04	B2+(2xH2)
180.9498.04	2
180.9701.04	B2
180.9702.04	B2
080.9637.04	2XB1
180.9630.07	(2XB1)+(2XH1)
	(2XB2)+(2XH2)
080.9125.SY	(2Xb1)+(2Xh1)
	(2Xb2)+(2Xh2)
169.8380.04	1
169.6973.04	1
052.5200.--	B2/300
052.5327.--	B2/300
052.5315.--	B1/300
052.5329.--	B1/300

BDCO 2

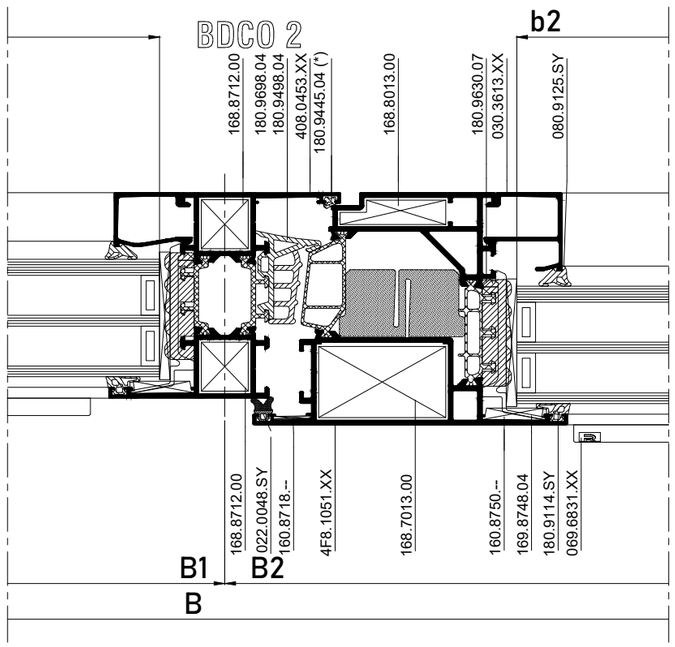

BDCO 3

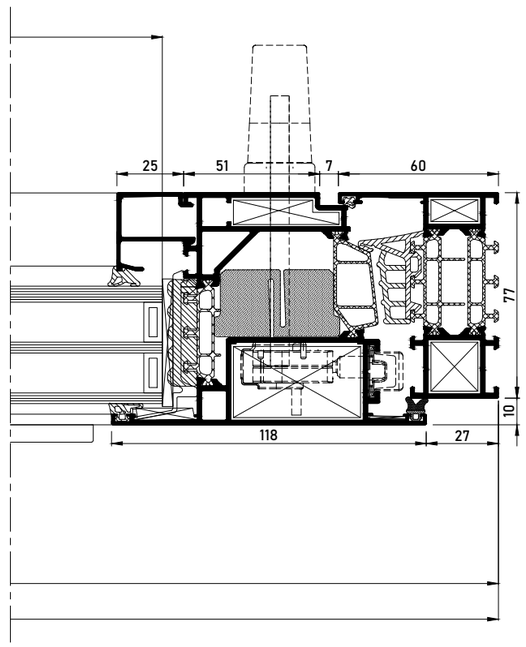

SECTIONS MASTERLINE 8-Fu

BALCONY DOOR SINGLE INWARD OPENING WITH PANEL

MASTERLINE 8-Fu

		#	Lm
408.0183.XX		1	B
		1	H
		1	H
408.0266.XX		2	B - 54
		2	H - 33
030.3613.XX		2	B - 214
		2	H - 243
408.0866.XX		1	B - 66
408.0052.XX		1	B - 138
408.0894.XX		1	B

		#
168.7002.00		2
168.8002.00		2
168.7113.00		4
168.8113.00		4
160.8750.--		6
160.8718.--		4
168.8712.00		2
168.5000.00		4
168.8732.00		2
068.9937.--		2
069.8768.04		19H.F. ...
180.8204.04 of / ou / or / oder 022.0048.SY		(2XB)+(2XH)
		(2XB)+(2XH)
180.9114.SY		(2xb)+(2xh)
180.9698.04		B+(2xH)
180.9498.04		2
180.9701.04		B
180.9702.04		B
180.9625.07		(2xB)+(2xH)
080.9126.SY		(2xb)+(2xh)
169.8380.04		1
169.6973.04		1
081.9123.SY		B
052.5200.--		B/300
052.5327.--		B/300

ZIE BEGLAZINGSMETHODE
VOIR METHODE DE VITRAGE
SEE GLAZING METHOD
ZIE VERGLASUNGSWEISE

50mm

b(in) = B - 226
h(in) = H - 205

b(out) = B - 134
h(out) = H - 117

MAGNETISCH PANEEL INFO
INFO PANNEAU MAGNÉTIQUE
MAGNETIC PANEL INFO
MAGNETISCHE PANEL INFORMATIONEN
WWW.HARINCK.BE

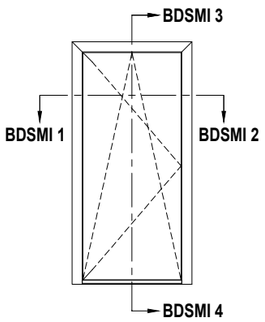

OPTIE / OPTION (*)

RAAMBESLAG > ZIE "OPENING WINDOWS"
ACCESSOIRES FENETRES > VOIRE "OPENING WINDOWS"
WINDOW GEAR > SEE "OPENING WINDOWS"
FENSTERBESCHLAG > SIEHE "OPENING WINDOWS"

RAAMDEURBESLAG > ZIE "OPENING DOORS"
ACCESSOIRES PORTES FENETRES > VOIRE "OPENING DOORS"
WINDOW-DOOR GEAR > SEE "OPENING DOORS"

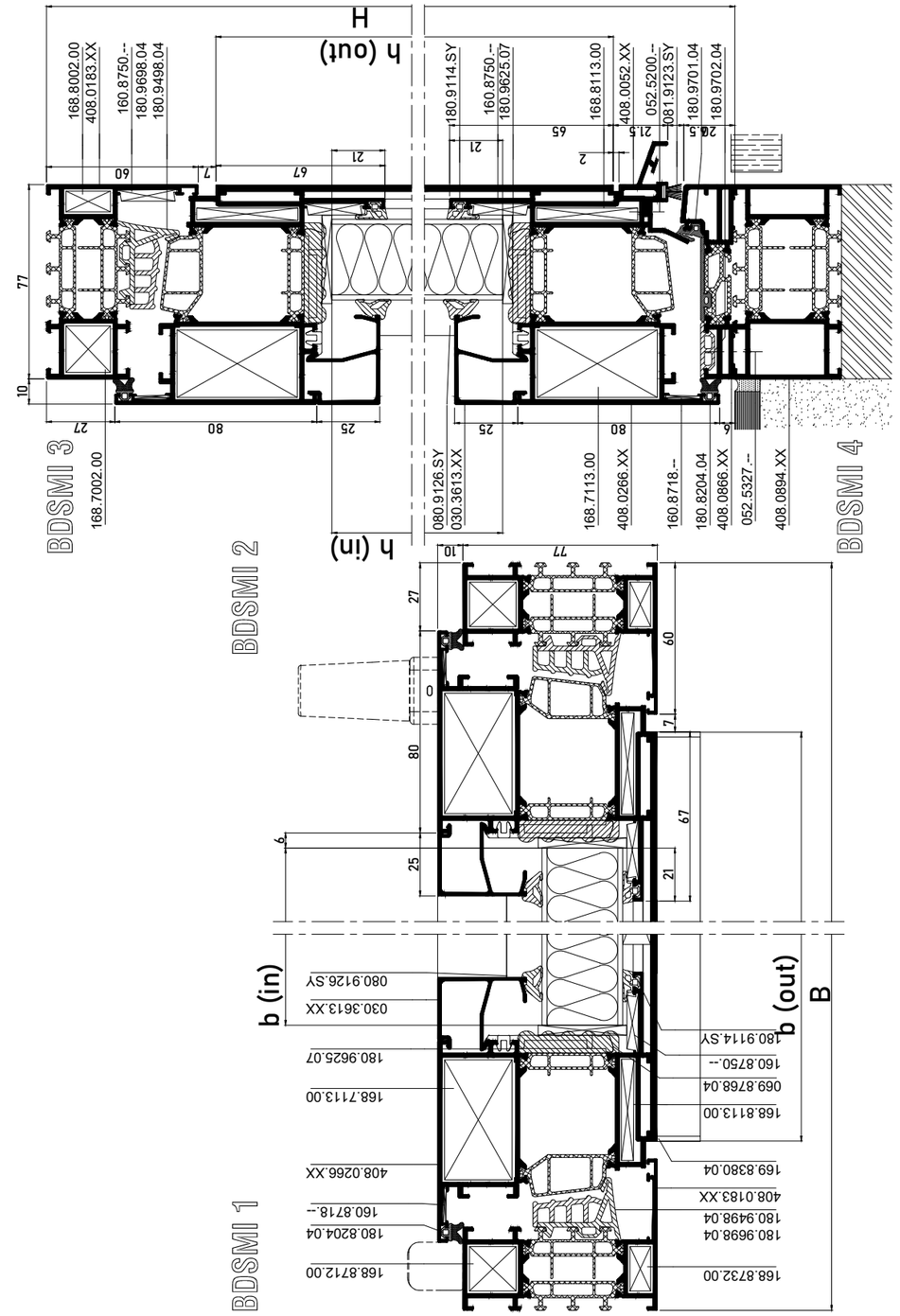

SECTIONS MASTERLINE 8-Fu

BALCONY DOOR SINGLE INWARD OPENING WITH PANEL - VARIANT

MASTERLINE 8-Fu

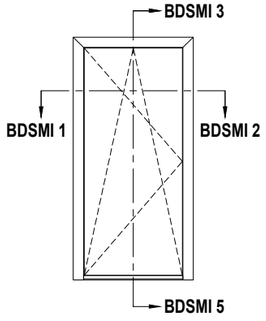

			#	Lm
408.0183.XX			1	B
			1	H
			1	H
408.0266.XX			2	B - 54
			2	H - 33
030.3615.XX			2	B - 214
			2	H - 243
408.0866.XX			1	B - 66
408.0052.XX			1	B - 138
408.0894.XX			1	B
408.0183.XX			1	B
			1	H - 12
			1	H - 12
408.0866.XX			1	B

		#
168.7002.00		2
168.8002.00		2
168.7113.00		4
168.8113.00		4
160.8750.--		6
160.8718.--		4
168.8712.00		2
168.5000.00		4
168.8732.00		2
068.9937.--		2
069.8768.04		19H.F. ...
180.8204.04 of / ou / or / oder 022.0048.SY		(2XB)+(2XH)
		(2XB)+(2XH)
180.9114.SY		(2xb)+(2xh)
180.9698.04		B+(2xH)
180.9498.04		2
180.9701.04		B
180.9702.04		B
180.9625.07		(2XB)+(2xH)
080.9125.SY		(2xb)+(2xh)
169.8380.04		1
169.6973.04		1
081.9123.SY		B
052.5200.--		B/300
052.5327.--		B/300

OPTIE / OPTION (*)

b(in) = B - 226
h(in) = H - 205

b(out) = B - 134
h(out) = H - 115

50mm
ZIE BEGLAZINGSMETHODE
VOIR METHODE DE VITRAGE
SEE GLAZING METHOD
ZIE VERGLASUNGSWEISE

RAAMBESLAG > ZIE "OPENING WINDOWS"
ACCESSOIRES FENETRES > VOIRE "OPENING WINDOWS"
WINDOW GEAR > SEE "OPENING WINDOWS"
FENSTERBESCHLAG > SIEHE "OPENING WINDOWS"

RAAMDEURBESLAG > ZIE "OPENING DOORS"
ACCESSOIRES PORTES FENETRES > VOIRE "OPENING DOORS"
WINDOW-DOOR GEAR > SEE "OPENING DOORS"

MAGNETISCH PANEEL INFO
INFO PANNEAU MAGNÉTIQUE
MAGNETIC PANEL INFO
MAGNETISCHE PANEL INFORMATIONEN
WWW.HARINCK.BE

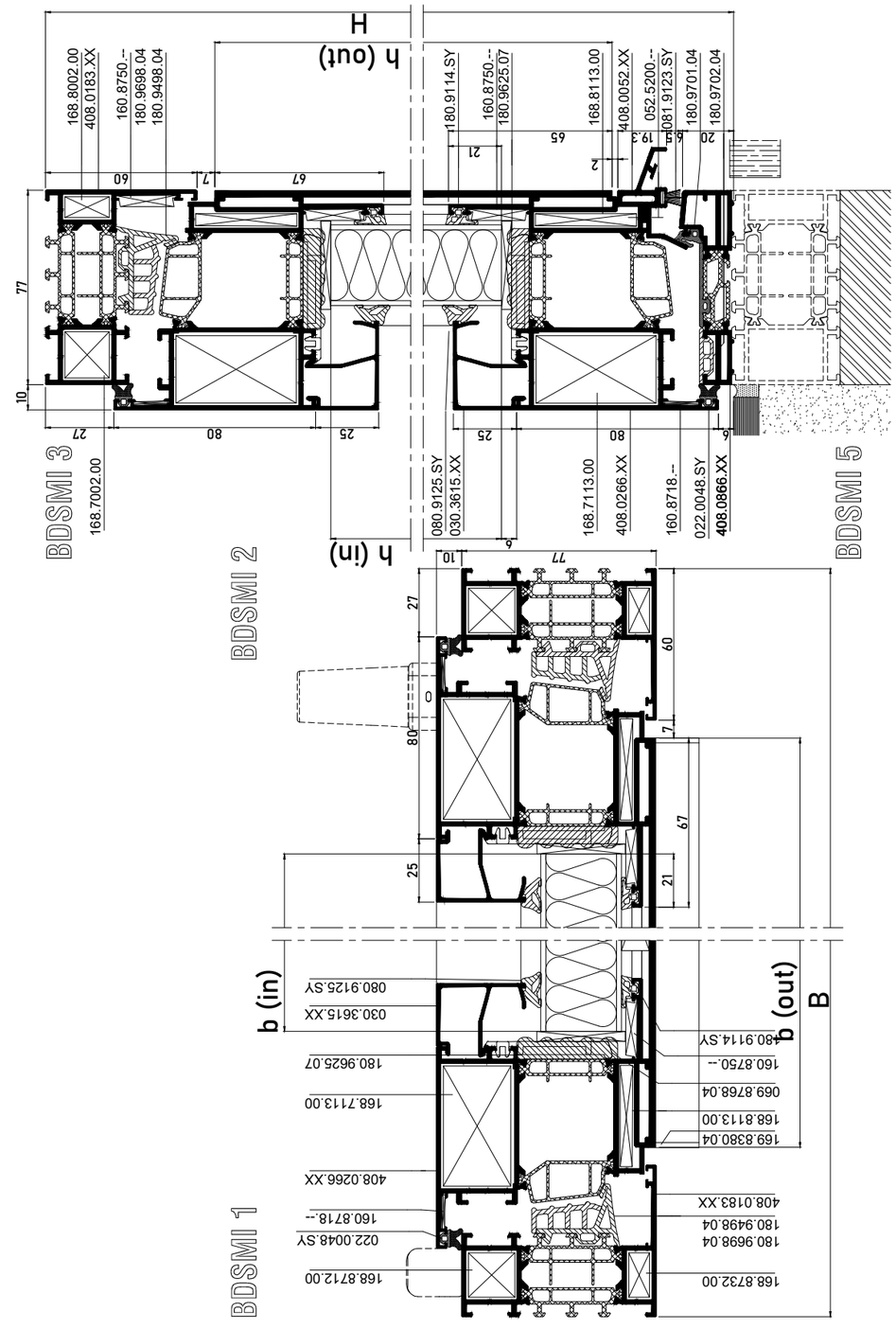

SECTIONS MASTERLINE 8-Fu

BALCONY DOOR DOUBLE INWARD OPENING WITH PANEL

MASTERLINE 8-Fu

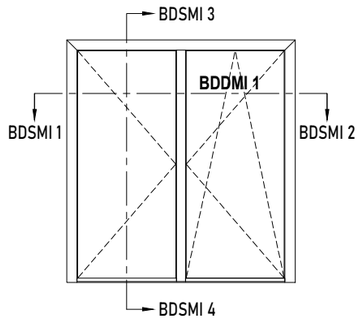

			#	Lm
408.0183.XX			1	B
			1	H
			1	H
408.0266.XX			2	B1 - 30.5
			2	B2 - 30.5
			4	H - 33
408.1115.XX			1	H - 100
030.3615.XX			2	B1 - 190.5
			2	B2 - 190.5
			4	H - 243
408.0866.XX			1	B - 66
408.0052.XX			1	B1 - 114.5
			1	B2 - 114.5
408.0894.XX			1	B

		#
168.7002.00		2
168.8002.00		2
168.7113.00		8
168.8113.00		8
160.8750.--		10
160.8718.--		8
168.8712.00		2
168.5000.00		4
168.8732.00		2
068.9937.--		2
069.8768.04		19H.F. ...
180.8204.04		(2XB)+(3xH)
of / ou / or / oder		
022.0048.SY		(2XB)+(3xH)
180.9114.SY		(4xb)+(4xh)
180.9698.04		B+(3xH)
180.9498.04		2
180.9701.04		B
180.9702.04		B
180.9625.07		(4xB)+(4xH)
080.9126.SY		(4xb)+(4xh)
169.8380.04		1
169.6973.04		1
081.9123.SY		B
052.5200.--		B/300
052.5327.--		B/300

052.5327.--		2
052.5318.--		2
169.6871.04		1
of / ou / or / oder		
169.6874.04		1

OPTIE / OPTION (*)

50mm

ZIE BEGLAZINGSMETHODE
VOIR METHODE DE VITRAGE
SEE GLAZING METHOD
ZIE VERGLASUNGSWEISE

b1(in)=B1-202.5
b2(in)=B2-202.5
h(in) = H - 205

b1(out)=B1-110.5
b2(out)=B2-110.5
h(out)=H-115

RAAMBESLAG > ZIE "OPENING WINDOWS"
ACCESSOIRES FENETRES > VOIRE "OPENING WINDOWS"
WINDOW GEAR > SEE "OPENING WINDOWS"
FENSTERBESCHLAG > SIEHE "OPENING WINDOWS"

RAAMDEURBESLAG > ZIE "OPENING DOORS"
ACCESSOIRES PORTES FENETRES > VOIRE "OPENING DOORS"
WINDOW-DOOR GEAR > SEE "OPENING DOORS"

DIN R =

DIN L =

MAGNETISCH PANEEL INFO
INFO PANNEAU MAGNÉTIQUE
MAGNETIC PANEL INFO
MAGNETISCHE PANEL INFORMATIONEN
WWW.HARINCK.BE

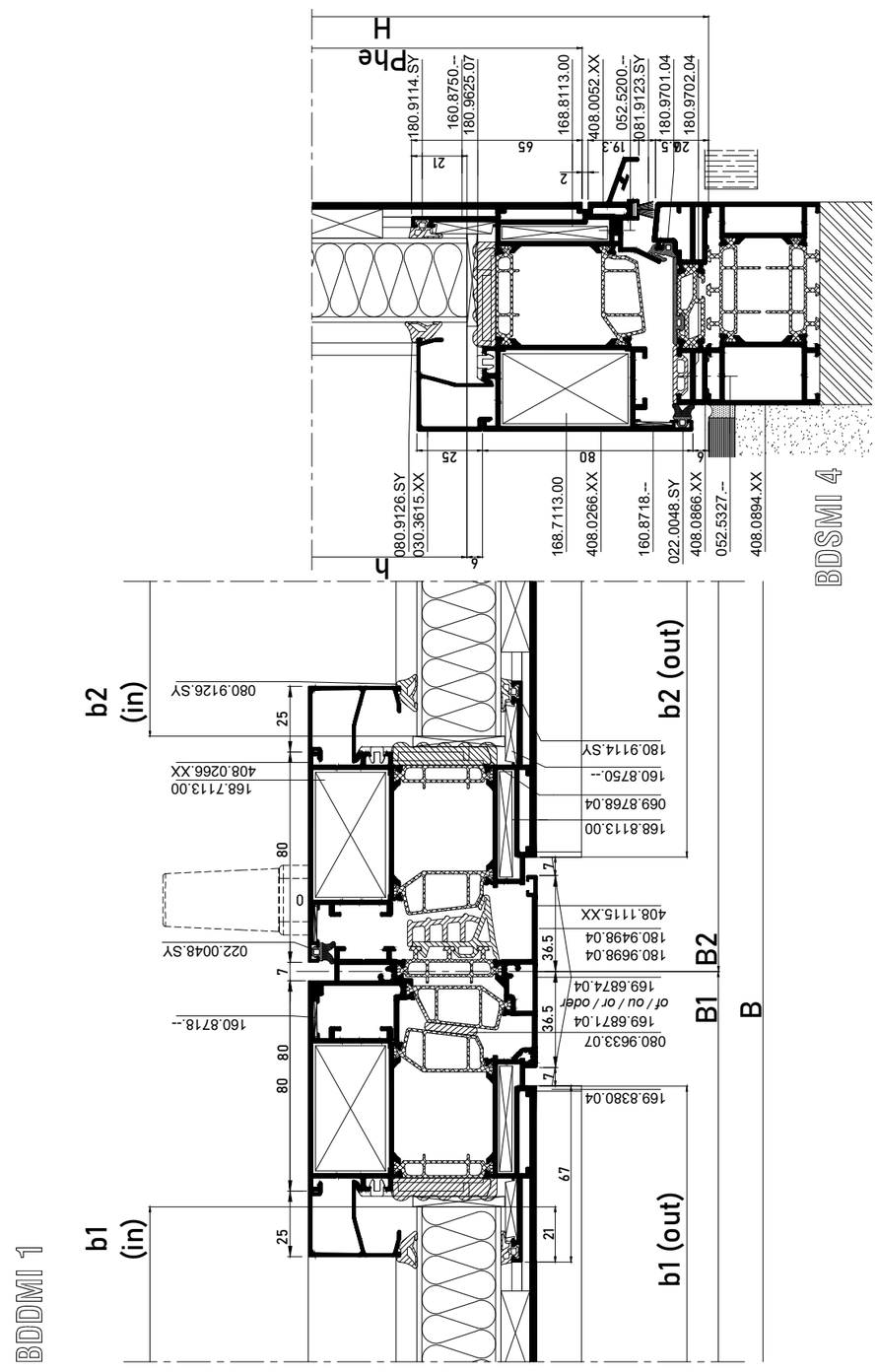

SECTIONS MASTERLINE 8-Fu

BALCONY DOOR DOUBLE INWARD OPENING WITH PANEL - VARIANT

MASTERLINE 8-Fu

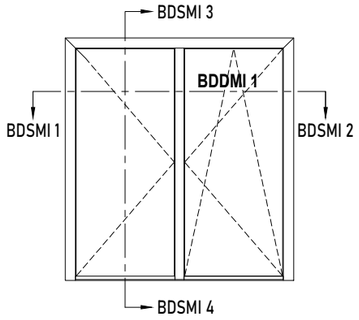

			#	Lm
408.0183.XX			1	B
			1	H
			1	H
408.0266.XX			2	B1 - 30.5
			2	B2 - 30.5
			4	H - 33
408.1115.XX			1	H - 100
030.3615.XX			2	B1 - 190.5
			2	B2 - 190.5
			4	H - 243
408.0866.XX			1	B - 66
408.0052.XX			1	B1 - 114.5
			1	B2 - 114.5
408.0894.XX			1	B
408.0183.XX			1	B
			1	H - 12
			1	H - 12
408.0866.XX			1	B

		#
168.7002.00		2
168.8002.00		2
168.7113.00		8
168.8113.00		8
160.8750.--		10
160.8718.--		8
168.8712.00		2
168.5000.00		4
168.8732.00		2
068.9937.--		2
069.8768.04		19H.F. ...
180.8204.04 of / ou / or / oder 022.0048.SY		(2XB)+(3xH)
		(2XB)+(3xH)
180.9114.SY		(4xb)+(4xh)
180.9698.04		B+(3xH)
180.9498.04		2
180.9701.04		B
180.9702.04		B
180.9625.07		(4xB)+(4xH)
080.9126.SY		(4xb)+(4xh)
169.8380.04		1
169.6973.04		1
081.9123.SY		B
052.5327.--		2
052.5318.--		2
052.5200.--		B/300
052.5327.--		B/300

ZIE BEGLAZINGSMETHODE
VOIR METHODE DE VITRAGE
SEE GLAZING METHOD
ZIE VERGLASUNGSWEISE

50mm

b1(in)=B1-202.5
b2(in)=B2-202.5
h(in) = H - 205

b1(out)=B1-110.5
b2(out)=B2-110.5
h(out)=H-115

RAAMBESLAG > ZIE "OPENING WINDOWS"
ACCESSOIRES FENETRES > VOIRE "OPENING WINDOWS"
WINDOW GEAR > SEE "OPENING WINDOWS"
FENSTERBESCHLAG > SIEHE "OPENING WINDOWS"

RAAMDEURBESLAG > ZIE "OPENING DOORS"
ACCESSOIRES PORTES FENETRES > VOIRE "OPENING DOORS"
WINDOW-DOOR GEAR > SEE "OPENING DOORS"

DIN R = 169.6871.04 of / ou / or / oder — 1
DIN L = 169.6874.04 — 1

MAGNETISCH PANEEL INFO
INFO PANNEAU MAGNÉTIQUE
MAGNETIC PANEL INFO
MAGNETISCHE PANEL INFORMATIONEN
WWW.HARINCK.BE

OPTIE / OPTION (*)

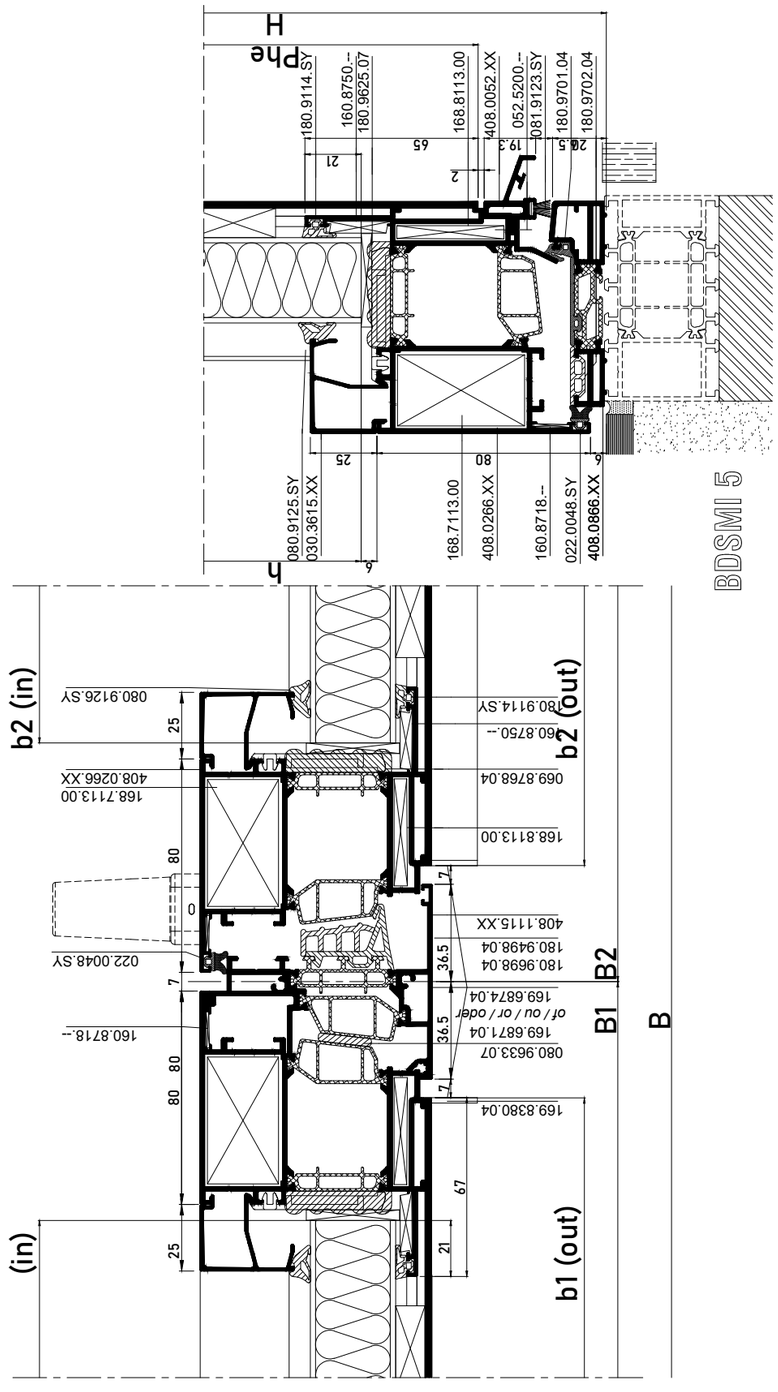

SECTIONS MASTERLINE 8-Fu Balcony Door

BALCONY DOOR SINGLE INWARD OPENING HI -> HI+

MASTERLINE 8-Fu

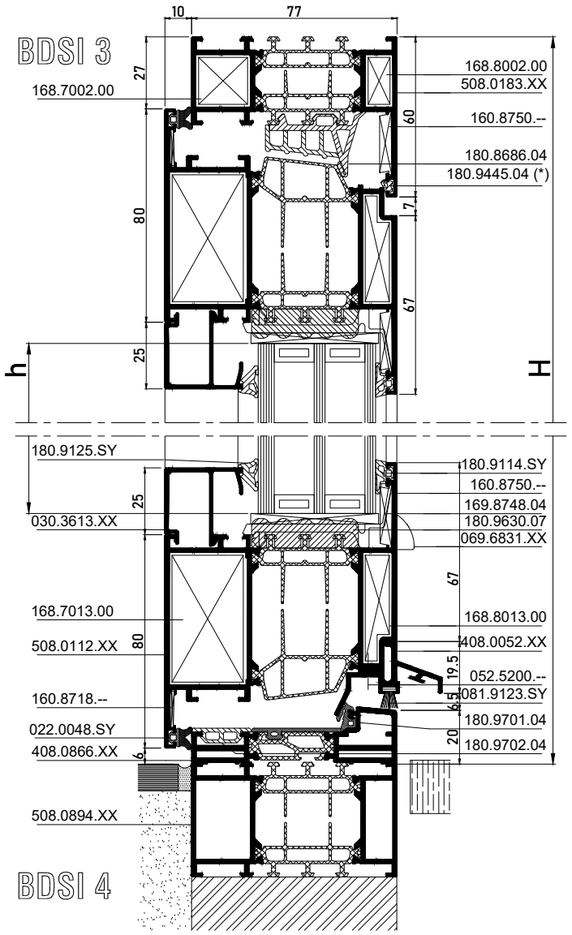

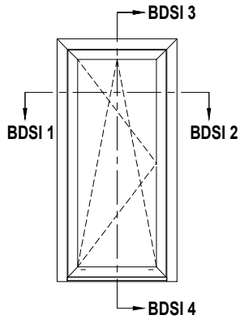



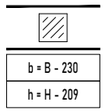

			#	Lm
408.0183.XX			1	B
			1	H
			1	H
408.0112.XX			2	B - 54
			2	H - 33
030.3613.XX			2	B - 214
			2	H - 243
408.0866.XX			1	B - 66
408.0052.XX			1	B - 138
408.0894.XX			1	B
508.0183.XX			1	B
			1	H
			1	H
508.0112.XX			2	B - 54
			2	H - 33
508.0894.XX			1	B

		#
168.7002.00		2
168.8002.00		2
168.7013.00		4
168.8013.00		4
160.8750.--		6
160.8718.--		4
168.8712.00		2
168.8732.00		2
068.9937.--		2
169.8748.04		PROD STEPS
069.6831.XX		PROD STEPS
180.8204.04 of / ou / or / oder 022.0048.SY		(2XB)+(2XH)
		(2XB)+(2XH)
180.9445.04 (*)		B+(2xH)
180.9114.SY		(2xb)+(2xh)
180.9701.04		B
180.9702.04		B
180.9630.07		(2xB)+(2xH)
080.9125.SY		(2xb)+(2xh)
169.8380.04		1
169.6973.04		1
081.9123.SY		B
052.5200.--		B/300
052.5327.--		B/300
180.9498.04		2
180.9698.04		B+(2xH)

180.8686.04		B+(2xH)

OPTIE / OPTION (*)

RAAMBESLAG > ZIE HARDWARE CONFIGURATOR
ACCESSOIRES FENETRES > VOIRE HARDWARE CONFIGURATOR
WINDOW GEAR > SEE HARDWARE CONFIGURATOR
FENSTERBESCHLAG > SIEHE HARDWARE CONFIGURATOR

RAAMDEURBESLAG > ZIE HARDWARE CONFIGURATOR
ACCESSOIRES PORTES FENETRES > VOIRE HARDWARE CONFIGURATOR
WINDOW-DOOR GEAR > SEE HARDWARE CONFIGURATOR
ZUBEHOR FENSTERTUEREN > SIEHE HARDWARE CONFIGURATOR

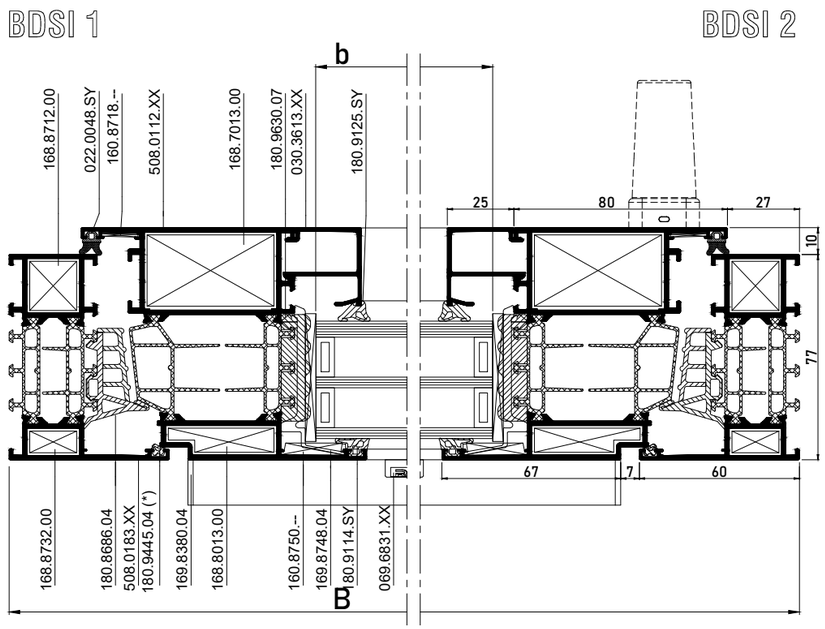

SECTIONS Masterline 8-Fu Balcony Door 2024

BALCONY DOOR INWARD OPENING CONCEALED HARDWARE

MASTERLINE 8-Fu

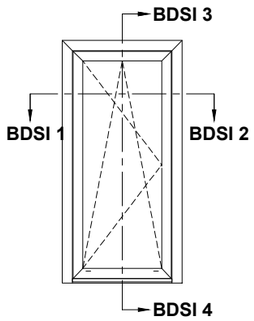

BDSI 1

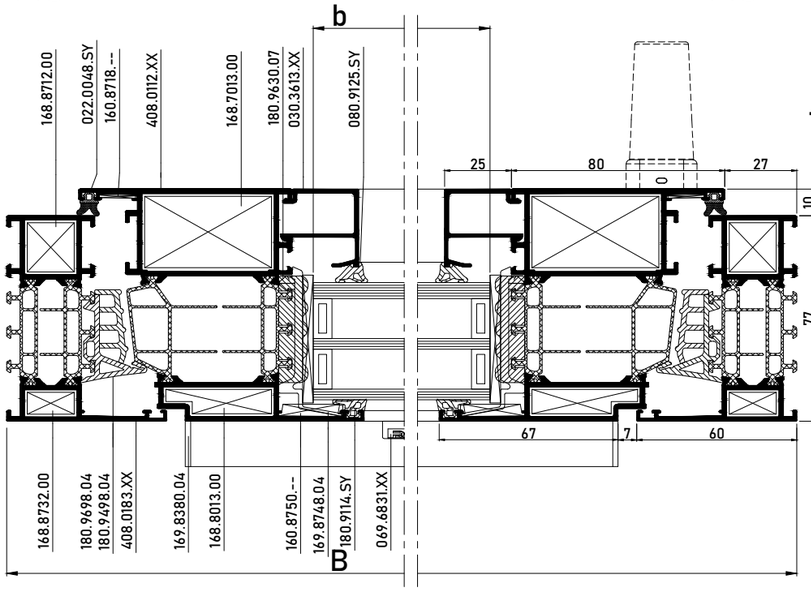

BDSI 2

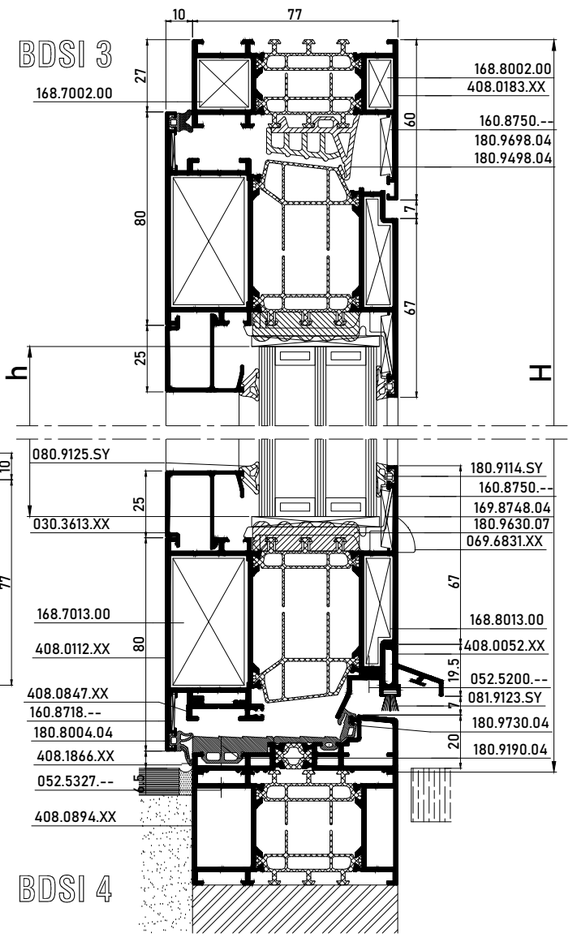

BDSI 4

			#	Lm
408.0183.XX			1	B
			1	H
			1	H
408.0112.XX			2	B - 54
			2	H - 35
030.3613.XX			2	B - 214
			2	H - 243
408.1866.XX			1	B - 66
408.0052.XX			1	B - 138
408.0894.XX			1	B
408.0847.XX			1	B - 138

b = B - 230

h = H - 211

50mm

ZIE BEGLAZINGSMETHODE
VOIR METHODE DE VITRAGE
SEE GLAZING METHOD
ZIE VERGLASUNGSWEISE

OPTIE / OPTION (*)

RAAMBESLAG > ZIE "OPENING WINDOWS"
ACCESSOIRES FENETRES > VOIRE "OPENING WINDOWS"
WINDOW GEAR > SEE "OPENING WINDOWS"
FENSTERBESCHLAG > SIEHE "OPENING WINDOWS"

RAAMDEURBESLAG > ZIE "OPENING DOORS"
ACCESSOIRES PORTES FENETRES > VOIRE "OPENING DOORS"
WINDOW-DOOR GEAR > SEE "OPENING DOORS"
ZUBEHOR FENSTERTUEREN > SIEHE "OPENING DOORS"

		#
168.7002.00		2
168.8002.00		2
168.7013.00		4
168.8013.00		4
160.8750.--		6
160.8718.--		4
168.8712.00		2
168.8732.00		2
068.9937.--		2
169.8748.04		19H.F. ...
069.6831.XX		19H.F. ...
180.8004.04		B
022.0048.SY		B + (2xH)
180.9114.SY		(2xb)+(2xh)
180.9698.04		B+(2xH)
180.9498.04		2
180.9730.04		B
180.9190.04		B
180.9630.07		(2xB)+(2xH)
080.9125.SY		(2xb)+(2xh)
169.8380.04		1
169.7030.04		1
081.9123.SY		B
052.5200.--		B/300
052.5327.--		B/300
052.5312.--		B/300
169.8500.--		1

ENKEL VOOR ZICHTBAAR RAAMBESLAG
POUR LES FERRURES DE FENÊTRES VISIBLES UNIQUEMENT
FOR VISIBLE WINDOW HARDWARE ONLY
NUR FÜR SICHTBARE FENSTERBESCHLÄGE

			#
DIN R =	169.8532.-- of / ou / or / oder		1
DIN L =	169.8531.--		1
	052.5355.--		1

SECTIONS Masterline 8-Fu Balcony Door 2024

BALCONY DOOR INWARD OPENING (CONCEALED HARDWARE) - VARIANT

MASTERLINE 8-Fu

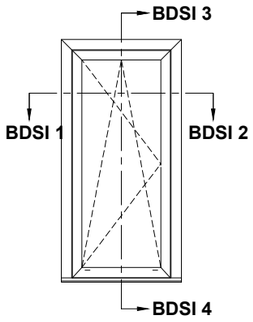

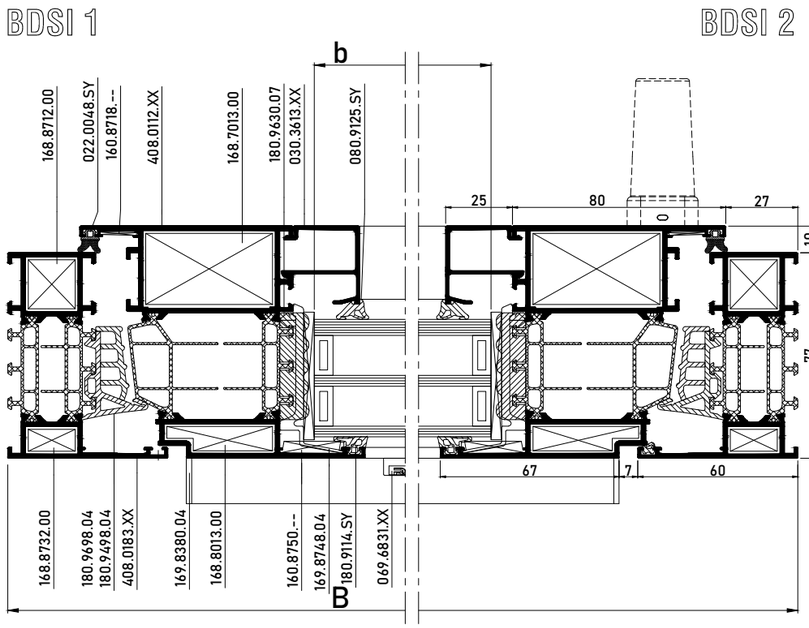

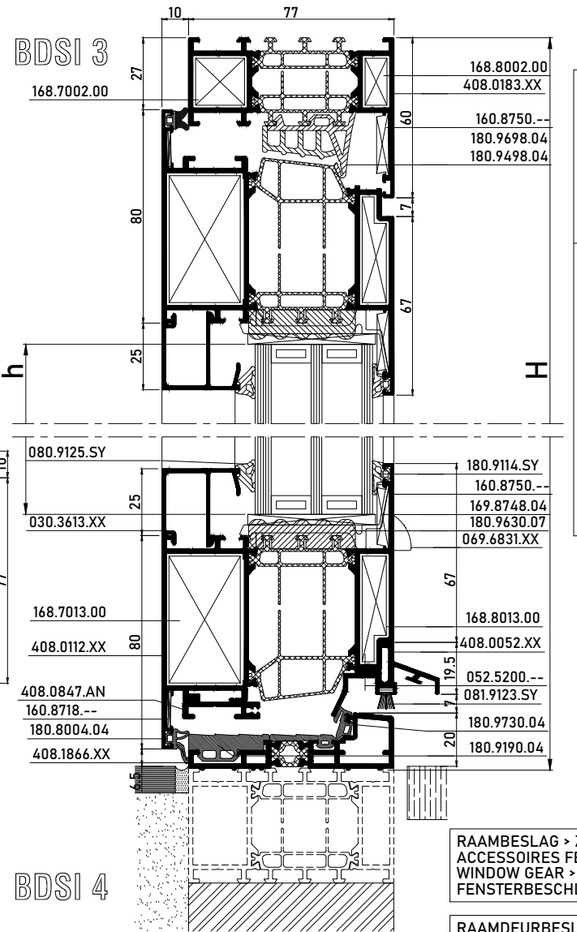

			#	Lm
408.0183.XX			1	B
			1	H
			1	H
408.0112.XX			2	B - 54
			2	H - 35
030.3613.XX			2	B - 214
			2	H - 243
408.1866.XX			1	B - 66
408.0052.XX			1	B - 138
408.0847.AN			1	B - 138

			#
408.0183.XX		1	B
		1	H - 7.3
		1	H - 7.3
408.1866.XX		1	B

b = B - 230

h = H - 211

ZIE BEGLAZINGSMETHODE
VOIR METHODE DE VITRAGE
SEE GLAZING METHOD
ZIE VERGLASUNGSWEISE
50mm

OPTIE / OPTION (*)

RAAMBESLAG > ZIE "OPENING WINDOWS"
ACCESSOIRES FENETRES > VOIRE "OPENING WINDOWS"
WINDOW GEAR > SEE "OPENING WINDOWS"
FENSTERBESCHLAG > SIEHE "OPENING WINDOWS"

RAAMDEURBESLAG > ZIE "OPENING DOORS"
ACCESSOIRES PORTES FENETRES > VOIRE "OPENING DOORS"
WINDOW-DOOR GEAR > SEE "OPENING DOORS"
ZUBEHOR FENSTERTUEREN > SIEHE "OPENING DOORS"

		#
168.7002.00		2
168.8002.00		2
168.7013.00		4
168.8013.00		4
160.8750.--		6
160.8718.--		4
168.8712.00		2
168.8732.00		2
068.9937.--		2
169.8748.04		19H.F. ...
069.6831.XX		19H.F. ...
180.8004.04		B
022.0048.SY		B + (2xH)
180.9114.SY		(2xb)+(2xh)
180.9698.04		B+(2xH)
180.9498.04		2
180.9730.04		B
180.9190.04		B
180.9630.07		(2xB)+(2xH)
080.9125.SY		(2xb)+(2xh)
169.8380.04		1
169.7030.04		1
081.9123.SY		B
052.5200.--		B/300
052.5327.--		B/300
169.8500.--		1

ENKEL VOOR ZICHTBAAR RAAMBESLAG
POUR LES FERRURES DE FENÊTRES VISIBLES UNIQUEMENT
FOR VISIBLE WINDOW HARDWARE ONLY
NUR FÜR SICHTBARE FENSTERBESCHLÄGE

DIN R =	169.8532.-- of / ou / or / oder		1
DIN L =	169.8531.--		1
	052.5355.--		1

SECTIONS Masterline 8-Fu Balcony Door 2024

BALCONY DOOR DOUBLE INWARD OPENING (CONCEALED HARDWARE)

MASTERLINE 8-Fu

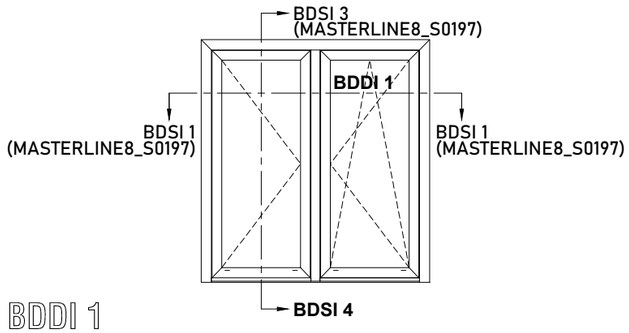

BDDI 1

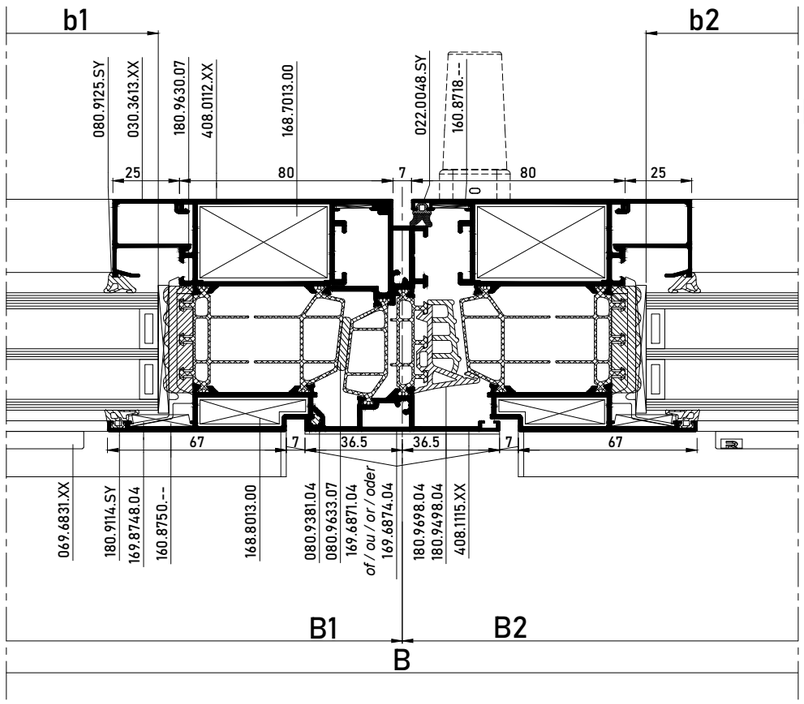

BDSI 4

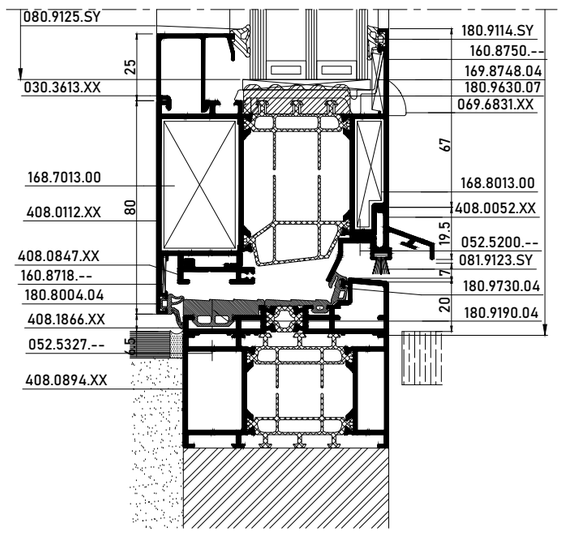

			#	Lm
408.0183.XX			1	B
			1	H
			1	H
408.0112.XX			2	B1 - 30.5
			2	B2 - 30.5
			4	H - 35
408.1115.XX			1	H - 102
030.3613.XX			2	B1 - 190.5
			2	B2 - 190.5
			4	H - 243
408.1866.XX			1	B - 66
408.0052.XX			1	B1 - 114.5
			1	B2 - 114.5
408.0894.XX			1	B
408.0847.XX			1	B1 - 114.5
			1	B2 - 114.5

		#
168.7002.00		2
168.8002.00		2
168.7013.00		8
168.8013.00		8
160.8750.--		10
160.8718.--		8
168.8712.00		2
168.8732.00		2
068.9937.--		2
169.8748.04		19H.F. ...
069.6831.XX		19H.F. ...
180.8004.04		B
022.0048.SY		B + (3xH)
180.9114.SY		(4xb)+(4xh)
080.9381.04		H
180.9698.04		(1xB)+(3xH)
180.9498.04		2
180.9730.04		B
180.9190.04		B
180.9630.07		(4xB)+(4xH)
080.9125.SY		(4xb)+(4xh)
169.8380.04		1
169.7030.04		1
081.9123.SY		B
052.5200.--		B/300
052.5327.--		B/300
169.8500.--		2
169.6871.04		1
169.8542.04		1
169.6874.04		1
169.8541.04		1

b1 = B1-206.5
b2 = B2-206.5
h = H - 211

ZIE BEGLAZINGSMETHODE
VOIR METHODE DE VITRAGE
SEE GLAZING METHOD
ZIE VERGLASUNGSWEISE

50mm

052.5327.--		2
052.5318.--		2
ENKEL VOOR ZICHTBAAR RAAMBESLAG POUR LES FERRURES DE FENÊTRES VISIBLES UNIQUEMENT FOR VISIBLE WINDOW HARDWARE ONLY NUR FÜR SICHTBARE FENSTERBESCHLÄGE		
169.8531.--		1
169.8532.--		1

DIN R =

DIN L =

OPTIE / OPTION (*)

RAAMBESLAG > ZIE "OPENING WINDOWS"
ACCESSOIRES FENETRES > VOIRE "OPENING WINDOWS"
WINDOW GEAR > SEE "OPENING WINDOWS"
FENSTERBESCHLAG > SIEHE "OPENING WINDOWS"

RAAMDEURBESLAG > ZIE "OPENING DOORS"
ACCESSOIRES PORTES FENETRES > VOIRE "OPENING DOORS"
WINDOW-DOOR GEAR > SEE "OPENING DOORS"
ZUBEHOR FENSTERTUEREN > SIEHE "OPENING DOORS"

SECTIONS Masterline 8-Fu Balcony Door 2024

COMBINED BALCONY DOOR INWARD OPENING (CONCEALED HARDWARE)

MASTERLINE 8-Fu

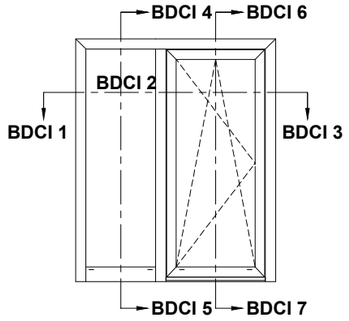

BDCI 1

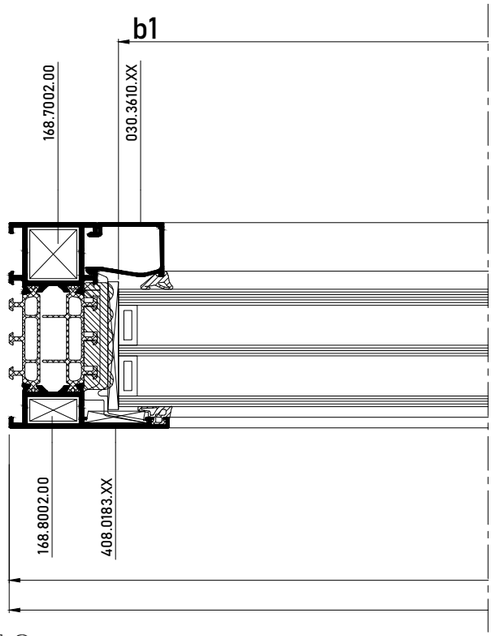

BDCI 2

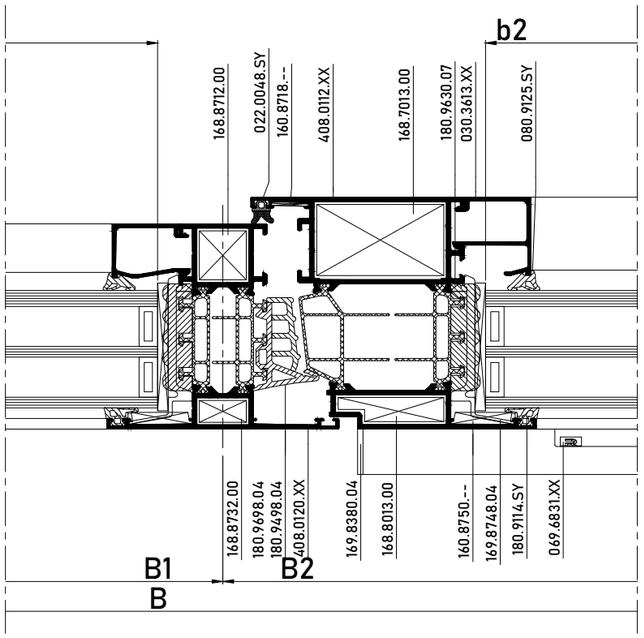

BDCI 3

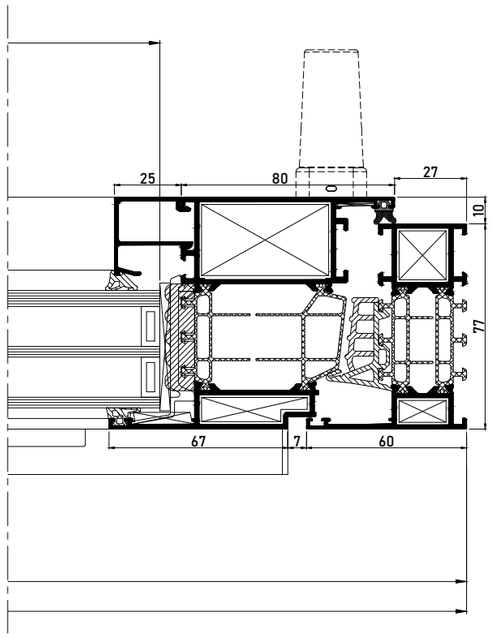

b1 = B1 - 65.5
h1 = H1 - 135
b2 = B2 - 213.5
h2 = H2 - 210

			#	Lm
408.0183.XX			1	B
			1	H2
			1	H1
408.1142.XX			1	B1 - 49.5
408.0120.XX			1	H2 - 33
408.0112.XX			2	B2 - 37.5
			2	H2 - 34
030.3613.XX			2	B2 - 197.5
			2	H2 - 244
030.3610.XX			2	B1 - 49.5
			2	H1 - 169
408.1866.XX			1	B2 - 49.5
408.0052.XX			1	B2 - 121.5
408.0847.XX			1	B2 - 121.5
408.0894.XX			1	B

		#
168.7002.00		2
168.8002.00		2
168.7013.00		4
168.8013.00		4
160.8750.--		10
160.8718.--		4
168.8712.00		8
168.8742.00		5
168.5012.--		5
168.8732.00		3
068.9937.--		3
169.8748.04		19H.F. ...
069.6831.XX		19H.F. ...
022.0048.SY		B2+(2xH2)
180.8004.04		B2
180.9114.SY		(2Xb1)+(2Xh1)
		(2Xb2)+(2Xh2)
180.9698.04		B2+(2xH2)
180.9498.04		2
180.9730.04		B2
180.9190.04*		B2
080.9637.04		2XB1
180.9630.07		(2XB1)+(2XH1)
		(2XB2)+(2XH2)
080.9125.SY		(2Xb1)+(2Xh1)
		(2Xb2)+(2Xh2)
169.8380.04		1
169.7030.04		1
081.9123.SY		B2
052.5200.--		B2/300
052.5327.--		B2/300
052.5315.--		B1/300
052.5329.--		B1/300

OPTIE / OPTION (*)

50mm
ZIE BEGLAZINGSMETHODE
VOIR METHODE DE VITRAGE
SEE GLAZING METHOD
ZIE VERGLASUNGSWEISE

ENKEL VOOR ZICHTBAAR RAAMBESLAG
POUR LES FERRURES DE FENÊTRES VISIBLES UNIQUEMENT
FOR VISIBLE WINDOW HARDWARE ONLY
NUR FÜR SICHTBARE FENSTERBESCHLÄGE

DIN R =	169.8532.-- of / ou / or / oder		1
DIN L =	169.8531.--		1
	052.5355.--		1

RAAMBESLAG > ZIE "OPENING WINDOWS"
ACCESSOIRES FENETRES > VOIRE "OPENING WINDOWS"
WINDOW GEAR > SEE "OPENING WINDOWS"
FENSTERBESCHLAG > SIEHE "OPENING WINDOWS"

RAAMDEURBESLAG > ZIE "OPENING DOORS"
ACCESSOIRES PORTES FENETRES > VOIRE "OPENING DOORS"
WINDOW-DOOR GEAR > SEE "OPENING DOORS"
ZUBEHOR FENSTERTUEREN > SIEHE "OPENING DOORS"

BDCI 4

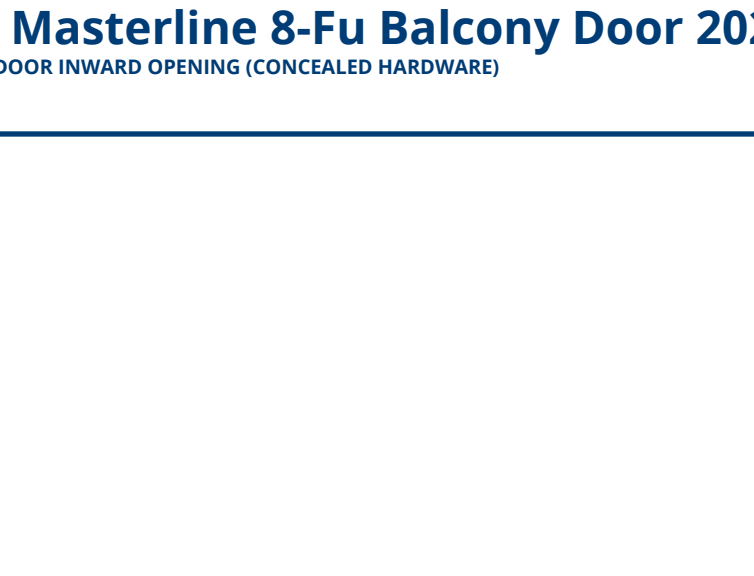

BDCI 6

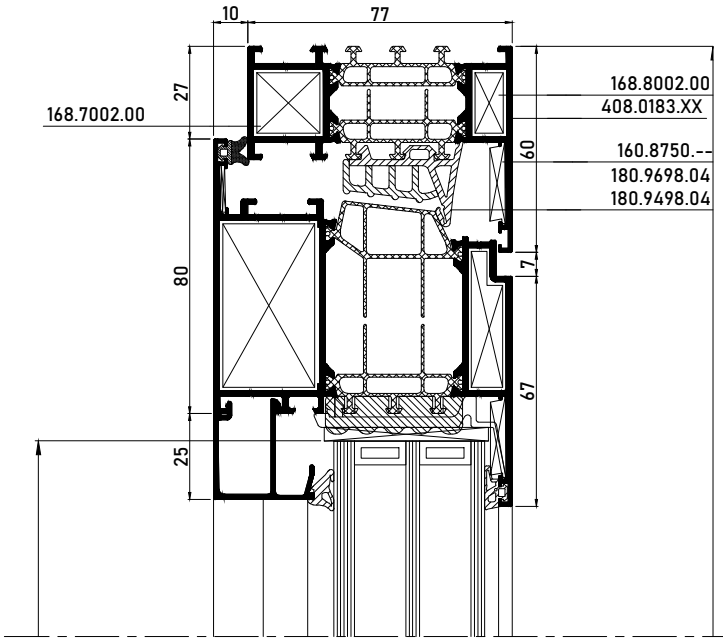

BDCI 5

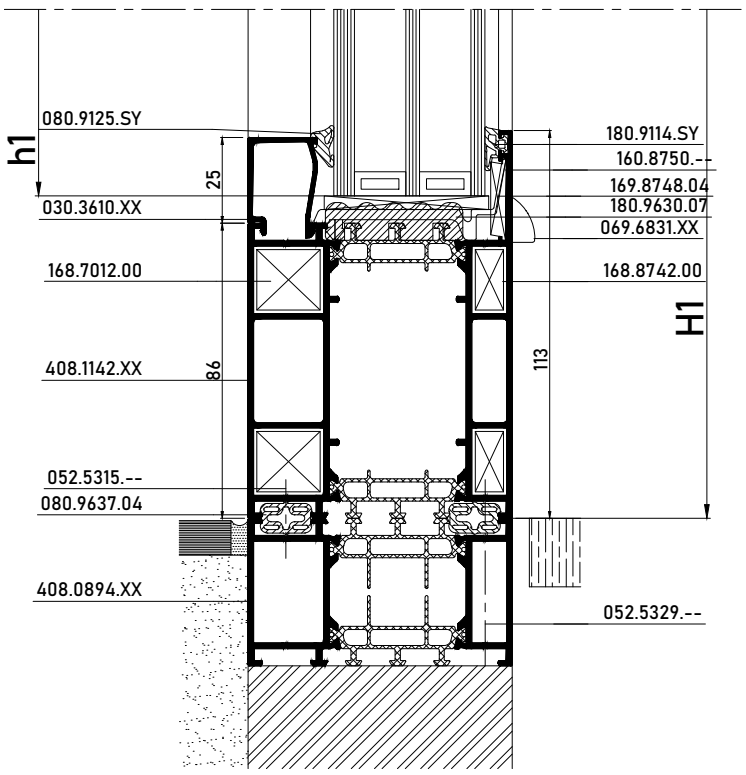

BDCI 7

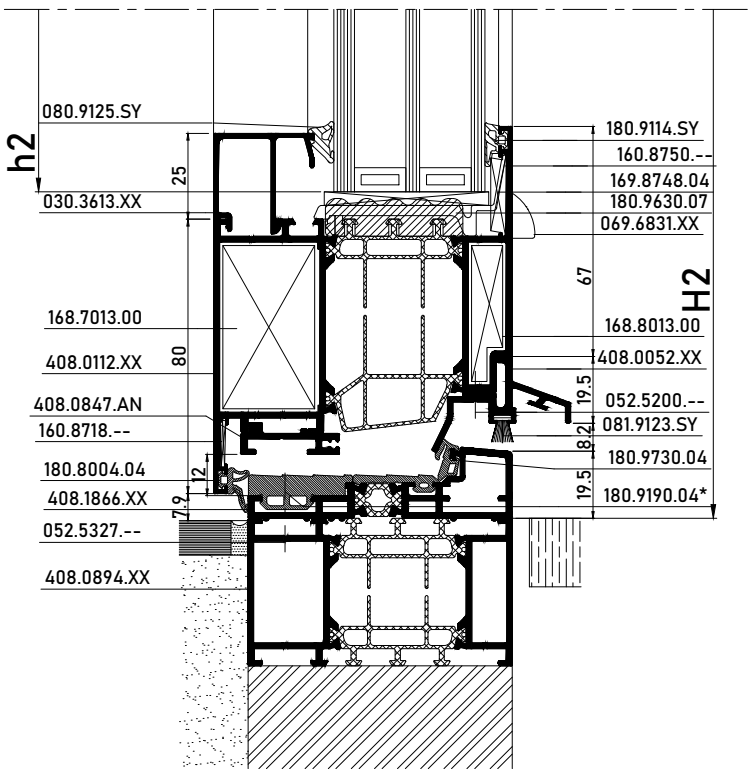

SECTIONS Masterline 8-Fu Balcony Door 2024

COMBINED BALCONY DOOR INWARD OPENING (CONCEALED HARDWARE) - VARIANT

MASTERLINE 8-Fu

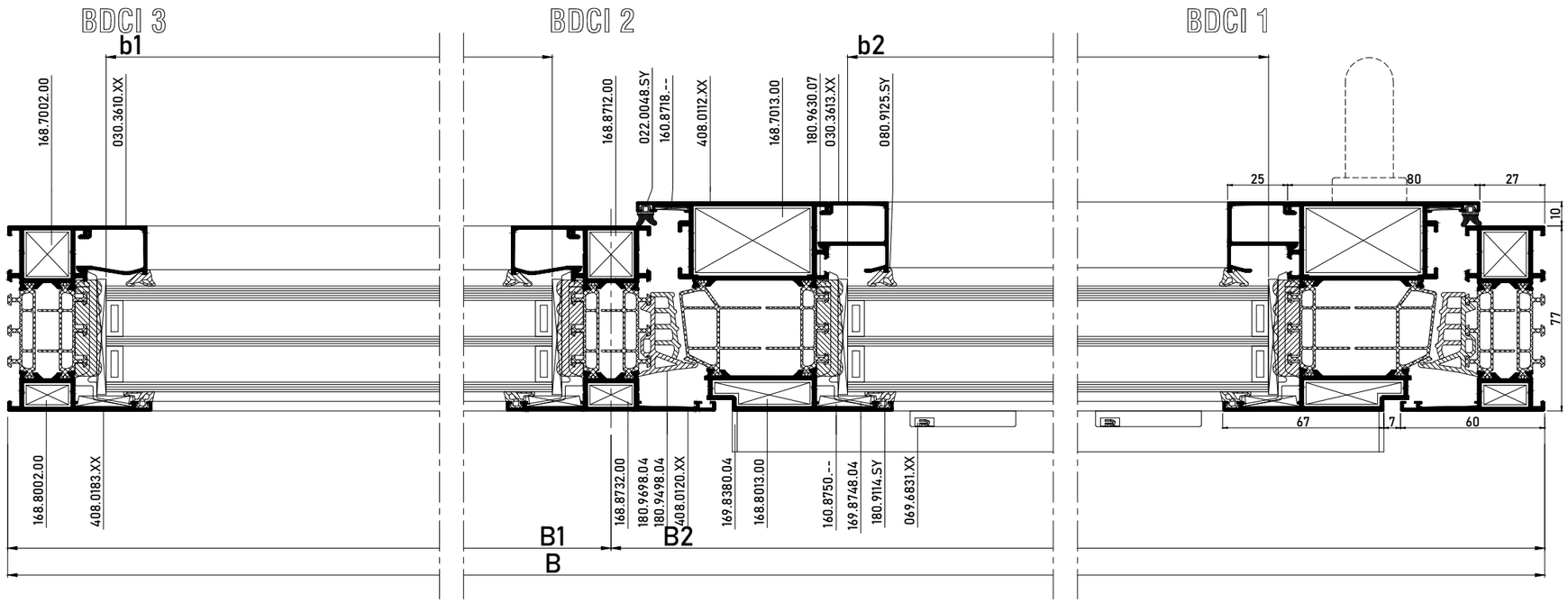

SECTIONS Masterline 8-Fu Balcony Door 2024

COMBINED BALCONY DOOR INWARD OPENING (CONCEALED HARDWARE) - VARIANT

MASTERLINE 8-Fu

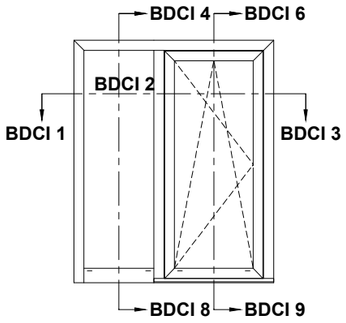

b1 = B1 - 65.5
h1 = H1 - 135
b2 = B2 - 213.5
h2 = H2 - 210

OPTIE / OPTION (*)

RAAMBESLAG > ZIE "OPENING WINDOWS"
ACCESSOIRES FENETRES > VOIRE "OPENING WINDOWS"
WINDOW GEAR > SEE "OPENING WINDOWS"
FENSTERBESCHLAG > SIEHE "OPENING WINDOWS"

RAAMDEURBESLAG > ZIE "OPENING DOORS"
ACCESSOIRES PORTES FENETRES > VOIRE "OPENING DOORS"
WINDOW-DOOR GEAR > SEE "OPENING DOORS"
ZUBEHOR FENSTERTUEREN > SIEHE "OPENING DOORS"

50mm
ZIE BEGLAZINGSMETHODE
VOIR METHODE DE VITRAGE
SEE GLAZING METHOD
ZIE VERGLASUNGSWEISE

ENKEL VOOR ZICHTBAAR RAAMBESLAG
POUR LES FERRURES DE FENÊTRES VISIBLES UNIQUEMENT
FOR VISIBLE WINDOW HARDWARE ONLY
NUR FÜR SICHTBARE FENSTERBESCHLÄGE

DIN R =	169.8532.--	1
	of / ou / or / oder	
DIN L =	169.8531.--	1
	052.5355.--	1

	#	Lm
408.0183.XX	1	B
	1	H2
	1	H1
408.1142.XX	1	B1 - 49.5
408.0120.XX	1	H2 - 33
408.0112.XX	2	B2 - 37.5
	2	H2 - 34
030.3613.XX	2	B2 - 197.5
	2	H2 - 244
030.3610.XX	2	B1 - 49.5
	2	H1 - 169
408.1866.XX	1	B2 - 49.5
408.0847.XX	1	B2 - 121.5
408.0052.XX	1	B2 - 121.5
408.0894.XX	1	B

	#	
408.0183.XX	1	B
	1	H2 - 6.5
	1	H1
408.0120.XX	1	H2 - 39.5
408.1866.XX	1	B2 + 43.5

		#
168.7002.00		2
168.8002.00		2
168.7013.00		4
168.8013.00		4
160.8750.--		10
160.8718.--		4
169.8748.04		19H.F. ...
069.6831.XX		19H.F. ...
022.0048.SY		B2+(2xH2)
180.8004.04		B2
180.9114.SY		(2Xb1)+(2Xh1)
		(2Xb2)+(2Xh2)
180.9698.04		B2+(2xH2)
180.9498.04		2
180.9730.04		B2
180.9190.04*		B2
180.9630.07		(2XB1)+(2XH1)
		(2XB2)+(2XH2)
080.9125.SY		(2Xb1)+(2Xh1)
		(2Xb2)+(2Xh2)
169.8380.04		1
169.7030.04		1
081.9123.SY		B2
052.5200.--		B2/300
080.9637.04		2XB1
052.5327.--		B2/300
052.5315.--		B1/300
052.5329.--		B1/300
168.8712.00		8
168.8742.00		5
168.5012.--		5
168.8732.00		3
068.8937.--		6

168.8712.00	6
168.8742.00	4
168.5012.--	4
168.8732.00	2
068.9937.--	2

BDCI 8

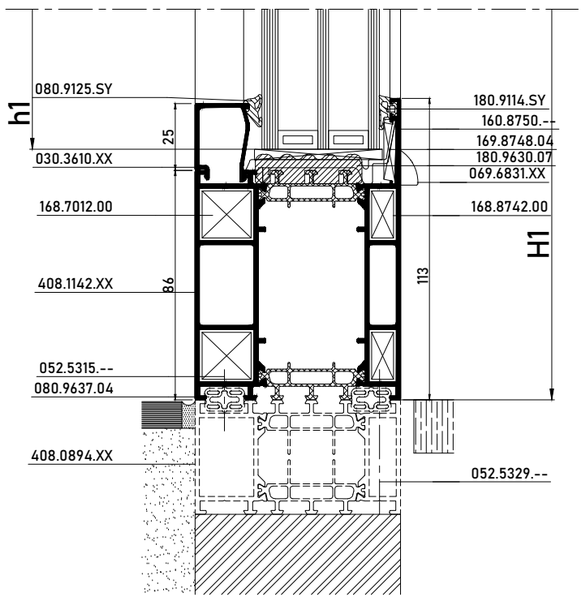

BDCI 9

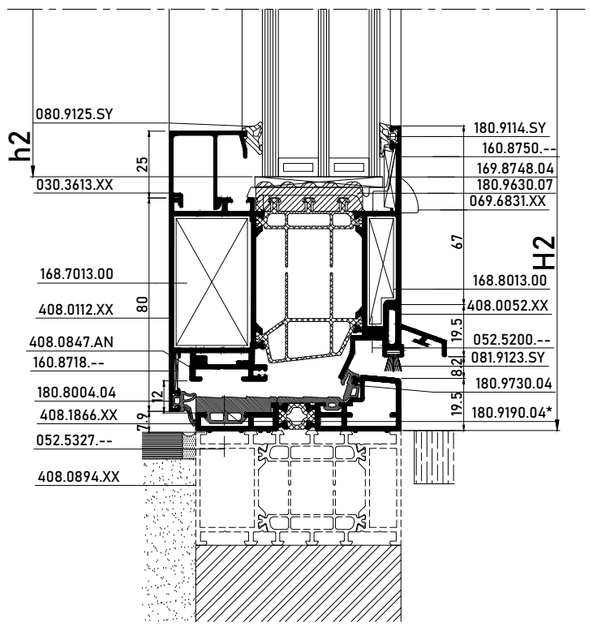

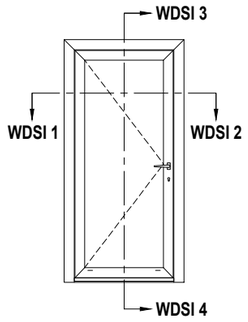

			#	Lm
408.0183.XX			1	B
			1	H
			1	H
408.0112.XX			2	B - 54
			2	H - 35
030.3613.XX			2	B - 214
			2	H - 245
408.0049.XX			1	B - 140

B = B - 230
h = H - 211

ZIE BEGLAZINGSMETHODE
VOIR METHODE DE VITRAGE
SEE GLAZING METHOD
ZIE VERGLASUNGSWEISE

	#
168.7002.00	2
168.8002.00	2
168.7013.00	4
168.8013.00	4
160.8750.--	6
160.8718.--	4
169.8748.04	PROD STEPS
069.6831.XX	PROD STEPS
180.8204.04 of / ou / or / oder 022.0048.SY	B+(2XH) / B+(2XH)
180.9114.SY	(2xb) + (2xh)
180.9698.04	B + (2xH)
180.9498.04	2
180.9630.07	(2xB) + (2xH)
080.9125.SY	(2xb) + (2xh)
169.7300.SY	1
081.9091.04	4x75mm
052.5311.--	4
169.7400.SY	1
081.9091.04	4x75mm
052.5311.--	4
081.9142.04	PROD STEPS
081.9055.-- *	PROD STEPS

* Afhankelijk van de vleugelbreedte
* En fonction de la largeur de l'ouvrant
* Depending on vent width
* Abhängig von der Flügelbreite

RAAMDEURBESLAG > ZIE "HARDWARE CONFIGURATOR"
ACCESSOIRES PORTES FENETRES > VOIRE "HARDWARE CONFIGURATOR"
WINDOW-DOOR GEAR > SEE "HARDWARE CONFIGURATOR"
ZUBEHOR FENSTERTUEREN > SIEHE "HARDWARE CONFIGURATOR"

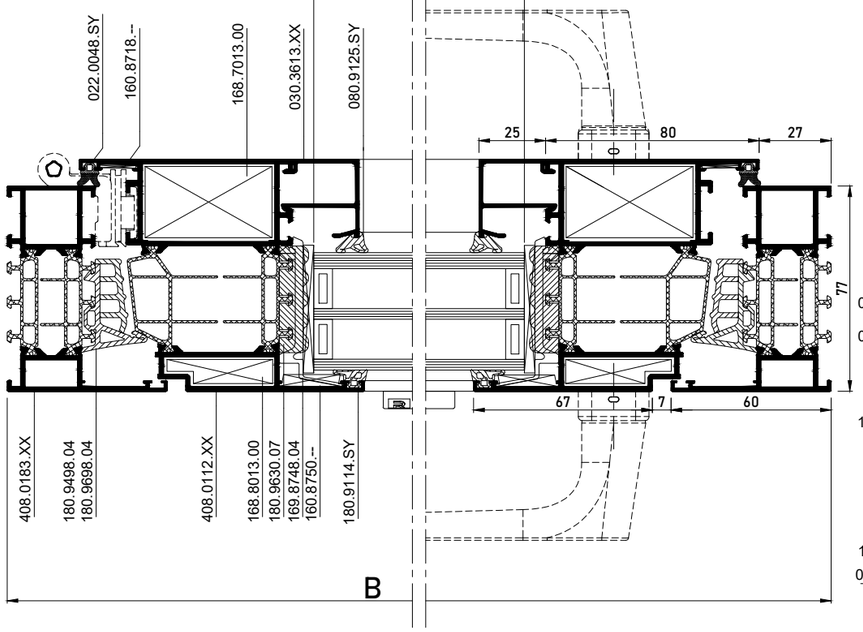

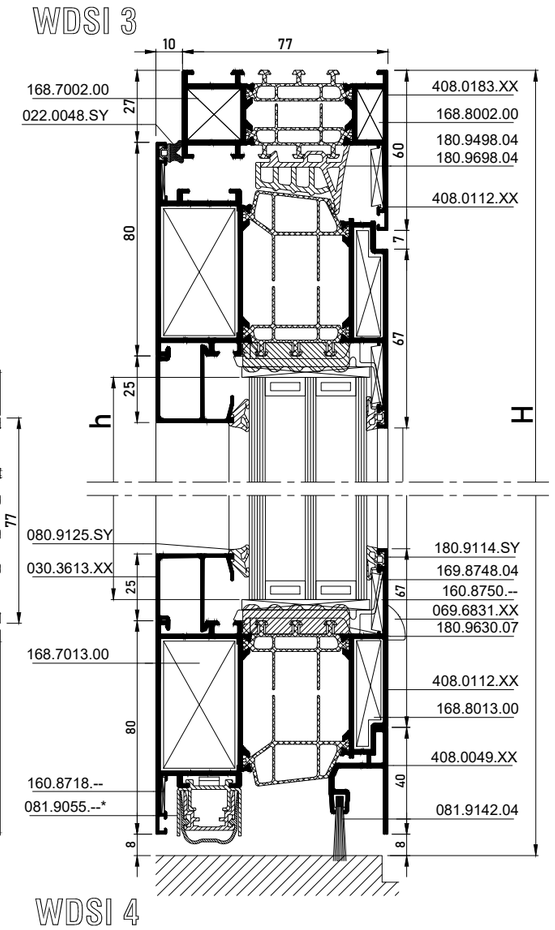

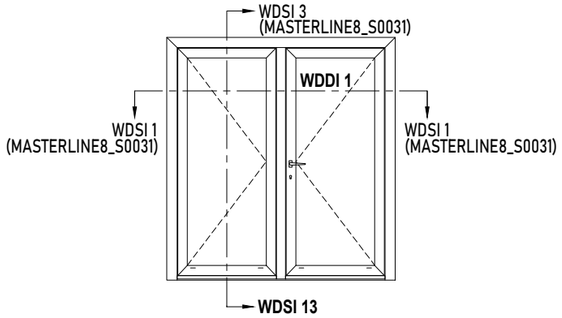

			#	Lm
408.0183.XX			1	B
			1	H
			1	H
408.0112.XX			2	B1 - 30.5
			2	B2 - 30.5
			4	H - 35
408.1115.XX			1	H - 77
030.3613.XX			2	B1 - 190.5
			2	B2 - 190.5
			4	H - 245
408.0049.XX			1	B1 - 113.5
			1	B2 - 116.5

b1 = B1 - 206.5
b2 = B2 - 206.5
h = H - 211

ZIE BEGLAZINGSMETHODE
VOIR METHODE DE VITRAGE
SEE GLAZING METHOD
ZIE VERGLASUNGSWEISE

	DIN L	DIN R
169.7300.04	1	2
169.7400.04	2	1

** Plaatsing Eindstukken
** Finition Pieces Finales
** Sealing End Pieces
** Montage Endkappen

RAAMDEURBESLAG > ZIE "OPENING DOORS"
ACCESSOIRES PORTES FENETRES > VOIRE "OPENING DOORS"
WINDOW-DOOR GEAR > SEE "OPENING DOORS"
ZUBEHOR FENSTERTUEREN > SIEHE "OPENING DOORS"

	#
168.7002.00	2
168.8002.00	2
168.7013.00	8
168.8013.00	8
160.8750.--	10
160.8718.--	8
169.8748.04	19H.F. ...
069.6831.XX	19H.F. ...
169.6897.SY	1
052.5327.--	1
052.5318.--	1
180.8204.04 of / ou / or / oder 022.0048.SY	B+(2XH)
	B+(2XH)
180.9114.SY	(2xb1) + (2xb2)
	+ (4xh)
180.9698.04	(2xB) + (3xH)
180.9498.04	2
180.9630.07	2 x B1
	2 x B2
	4 x H
080.9125.SY	(2xb1) + (2xb2)
	+ (4xh)
169.7300.SY**	1
081.9091.04	4x75mm
052.5311.--	4
169.7400.SY**	2
081.9091.04	8x75mm
052.5311.--	8
080.9633.07	H
081.9142.04	19H.F. ...

USING ESPAGNOLET

168.7013.00	6
168.7650.00	2

WDDI 1

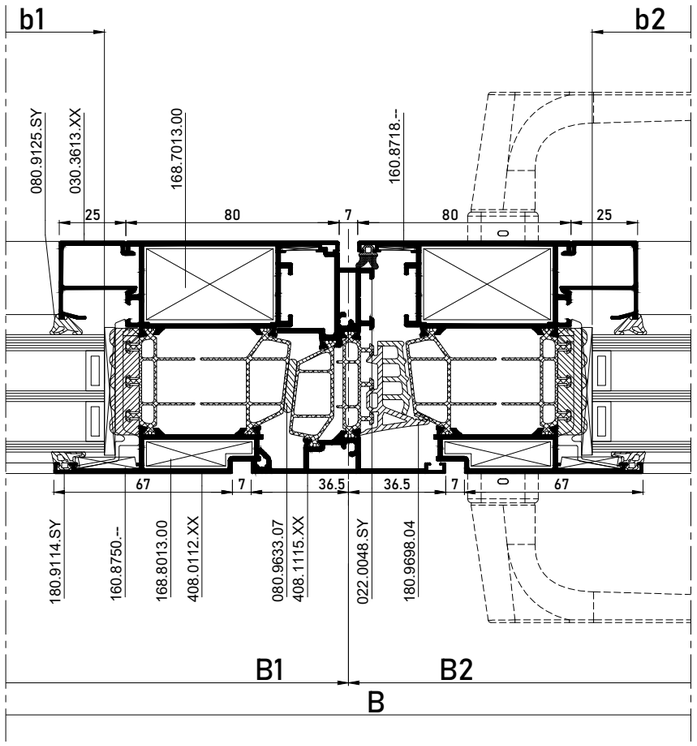

WDSI 13

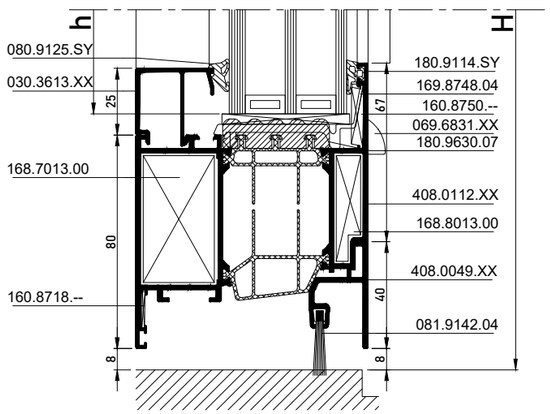

SECTIONS MASTERLINE 8-Fu

WINDOW-DOOR OUTWARD OPENING

MASTERLINE 8-Fu

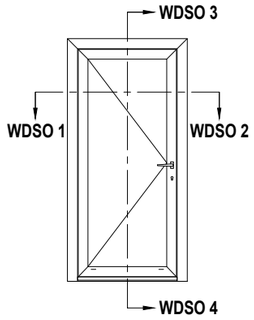

			#	Lm
408.0183.XX			1	B
			1	H
			1	H
4F8.1051.XX			2	B - 54
			2	H - 35
030.3613.XX			2	B - 236
			2	H - 267
408.0049.XX			1	B - 140

B = B - 252
h = H - 233

50mm ZIE BEGLAZINGSMETHODE
VOIR METHODE DE VITRAGE
SEE GLAZING METHOD
SIEHE VERGLASUNGSWEISE

		#
168.7002.00		2
168.8002.00		2
168.7013.00		4
168.8013.00		4
160.8750.--		6
160.8718.--		4
169.8748.04		PROD STEPS
069.6831.XX		PROD STEPS
180.8204.04		B+(2XH)
of / ou / or / oder		
022.0048.SY		B+(2XH)
180.9114.SY		(2xb) + (2xh)
180.9698.04		B + (2xH)
180.9498.04		2
180.9630.07		(2xB) + (2xH)
080.9125.SY		(2xb) + (2xh)
169.7300.SY		1
081.9091.04		4x75mm
052.5311.--		4
169.7400.SY		1
081.9091.04		4x75mm
052.5311.--		4
081.9142.04		PROD STEPS
081.9055.-- *		PROD STEPS

* Afhankelijk van de vleugelbreedte
* En fonction de la largeur de l'ouvrant
* Depending on vent width
* Abhängig von der Flügelbreite

RAAMDEURBESLAG > ZIE "HARDWARE CONFIGURATOR"
ACCESSOIRES PORTES FENETRES > VOIRE "HARDWARE CONFIGURATOR"
WINDOW-DOOR GEAR > SEE "HARDWARE CONFIGURATOR"
ZUBEHOR FENSTERTUEREN > SIEHE "HARDWARE CONFIGURATOR"

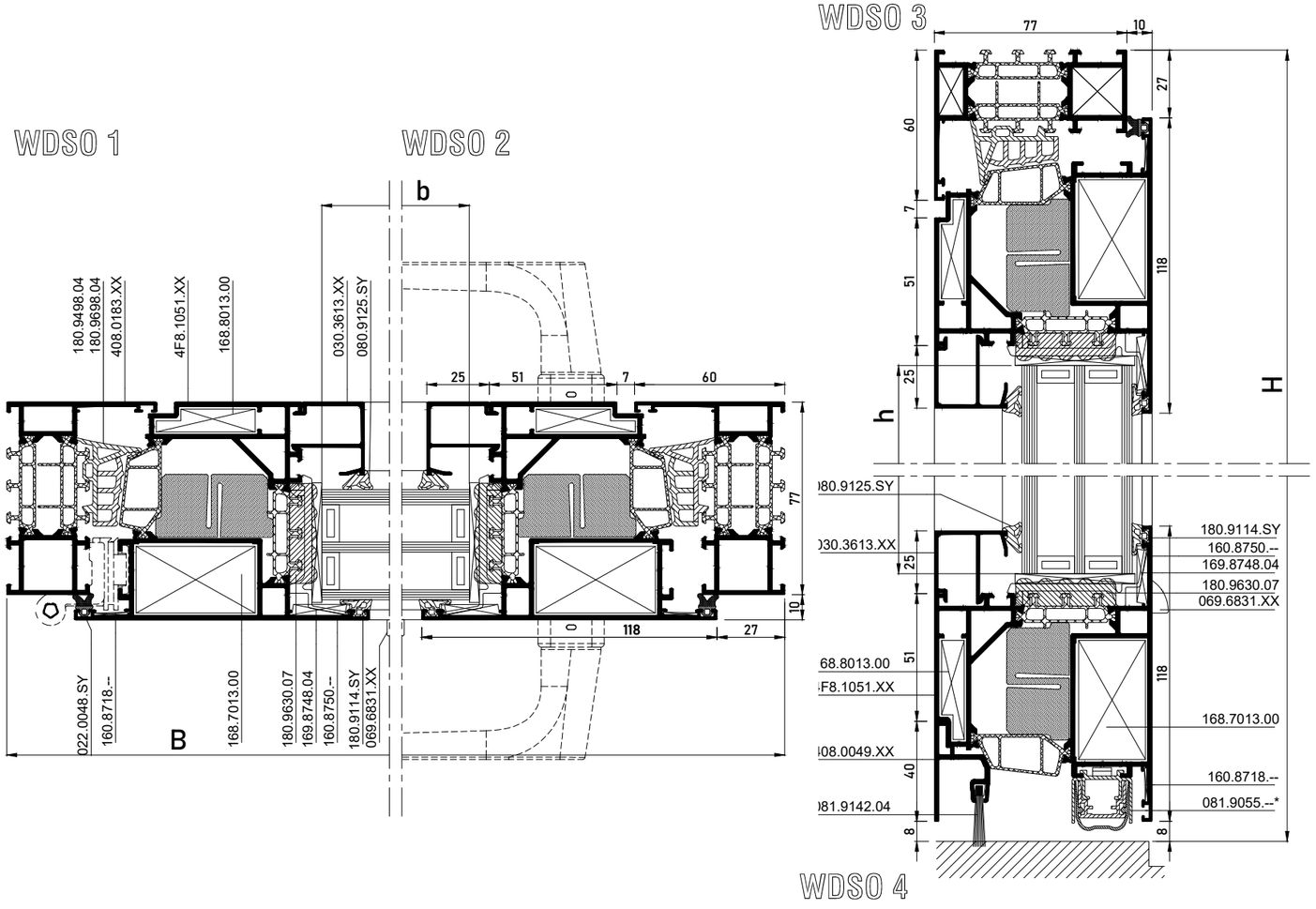

SECTIONS Masterline 8-Fu Balcony Door 2024

WINDOW-DOOR OUTWARD OPENING

MASTERLINE 8-Fu

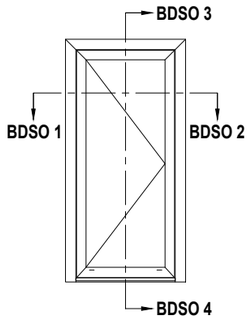

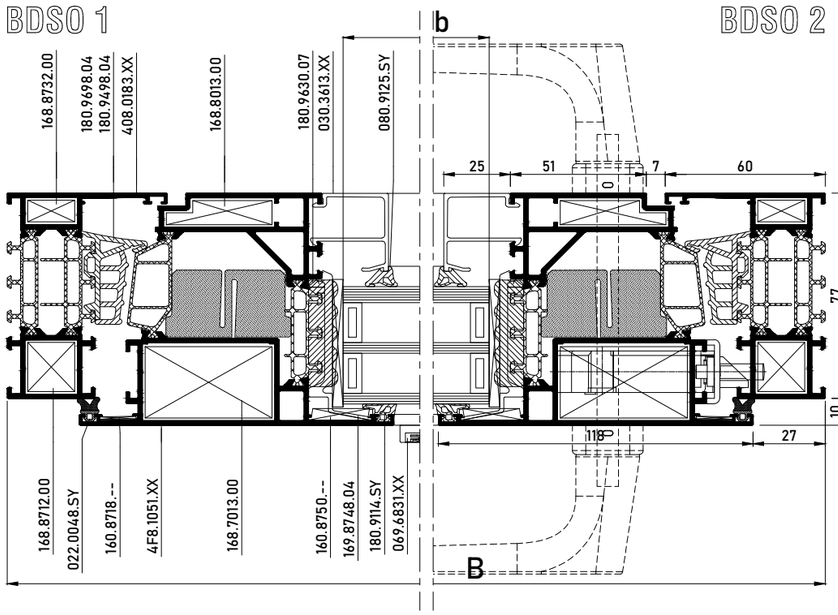

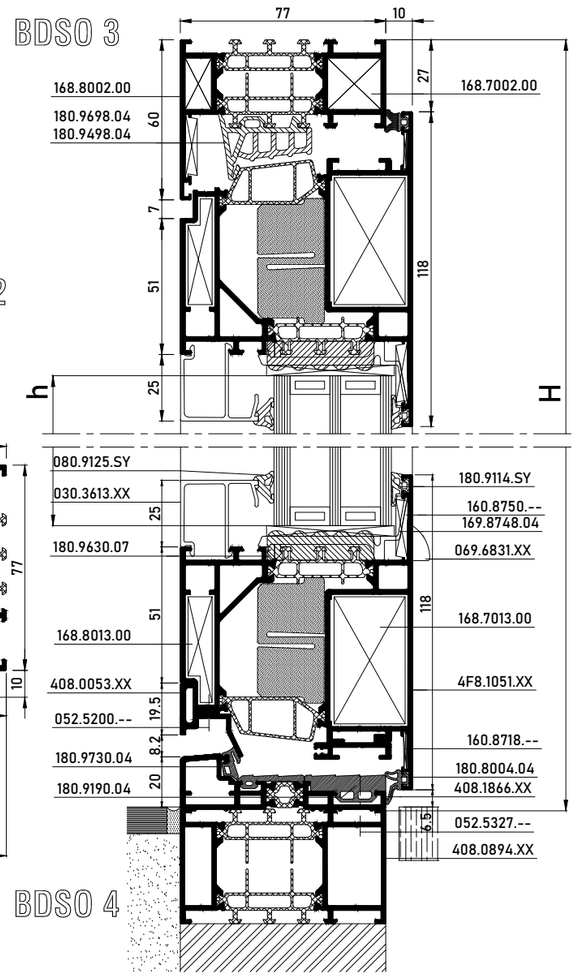

			#	Lm
408.0183.XX			1	B
			1	H
			1	H
4F8.1051.XX			2	B - 54
			2	H - 35
030.3613.XX			2	B - 236
			2	H - 265
408.1866.XX			1	B - 66
408.0053.XX			1	B - 138
408.0894.XX			1	B
408.0847.XX			1	B - 138

b = B - 252	
h = H - 233	

ZIE BEGLAZINGSMETHODE
VOIR METHODE DE VITRAGE
SEE GLAZING METHOD
ZIE VERGLASUNGSWEISE
50mm

OPTIE / OPTION (*)

RAAMBESLAG > ZIE "OPENING WINDOWS"
ACCESSOIRES FENETRES > VOIRE "OPENING WINDOWS"
WINDOW GEAR > SEE "OPENING WINDOWS"
FENSTERBESCHLAG > SIEHE "OPENING WINDOWS"

RAAMDEURBESLAG > ZIE "OPENING DOORS"
ACCESSOIRES PORTES FENETRES > VOIRE "OPENING DOORS"
WINDOW-DOOR GEAR > SEE "OPENING DOORS"
ZUBEHOR FENSTERTUEREN > SIEHE "OPENING DOORS"

DIN R =

DIN L =

	#
168.7002.00	2
168.8002.00	2
168.7013.00	4
168.8013.00	4
160.8750.--	6
160.8718.--	4
168.8712.00	2
168.8732.00	2
068.9937.--	2
169.8748.04	19H.F. ...
069.6831.XX	19H.F. ...
180.8004.04	B
022.0048.SY	B + (2xH)
180.9114.SY	(2xb)+(2xh)
180.9698.04	B+(2xH)
180.9498.04	2
180.9730.04	B
180.9190.04	B
180.9630.07	(2xB)+(2xH)
080.9125.SY	(2xb)+(2xh)
169.8380.04	1
169.7030.04	1
081.9123.SY	B
052.5200.--	B/300
052.5327.--	B/300
169.8500.--	1

ENKEL VOOR ZICHTBAAR RAAMBESLAG
POUR LES FERRURES DE FENÊTRES VISIBLES UNIQUEMENT
FOR VISIBLE WINDOW HARDWARE ONLY
NUR FÜR SICHTBARE FENSTERBESCHLÄGE

169.8532.--		1
of / ou / or / oder		
169.8531.--		1
052.5355.--		1

SECTIONS Masterline 8-Fu Balcony Door 2024

WINDOW-DOOR SINGLE OUTWARD OPENING - VARIANT

MASTERLINE 8-Fu

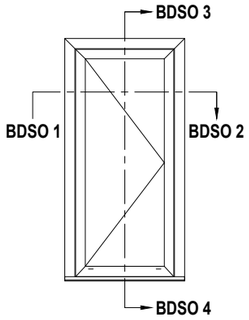

OPTIE / OPTION (*)

RAAMBESLAG > ZIE "OPENING WINDOWS"
ACCESSOIRES FENETRES > VOIRE "OPENING WINDOWS"
WINDOW GEAR > SEE "OPENING WINDOWS"
FENSTERBESCHLAG > SIEHE "OPENING WINDOWS"

RAAMDEURBESLAG > ZIE "OPENING DOORS"
ACCESSOIRES PORTES FENETRES > VOIRE "OPENING DOORS"
WINDOW-DOOR GEAR > SEE "OPENING DOORS"
ZUBEHOR FENSTERTUEREN > SIEHE "OPENING DOORS"

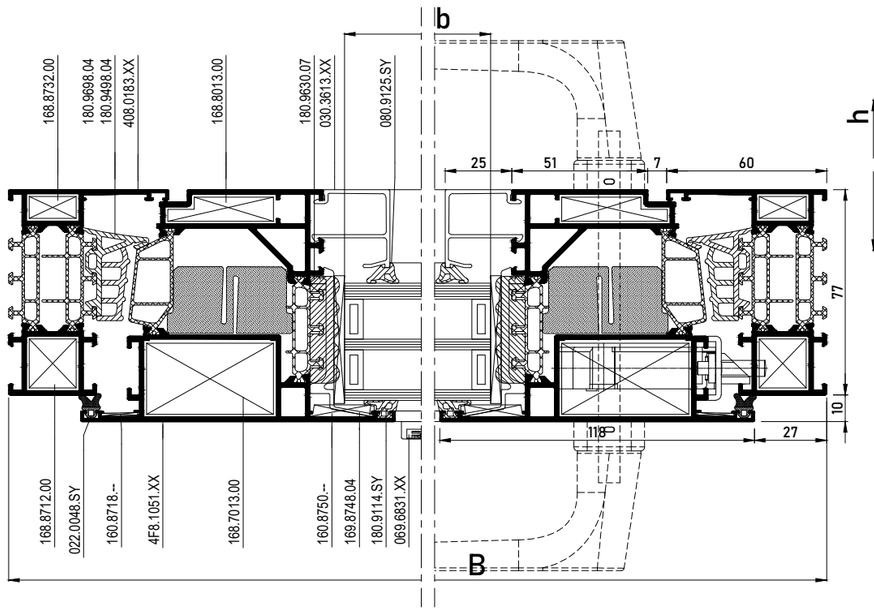

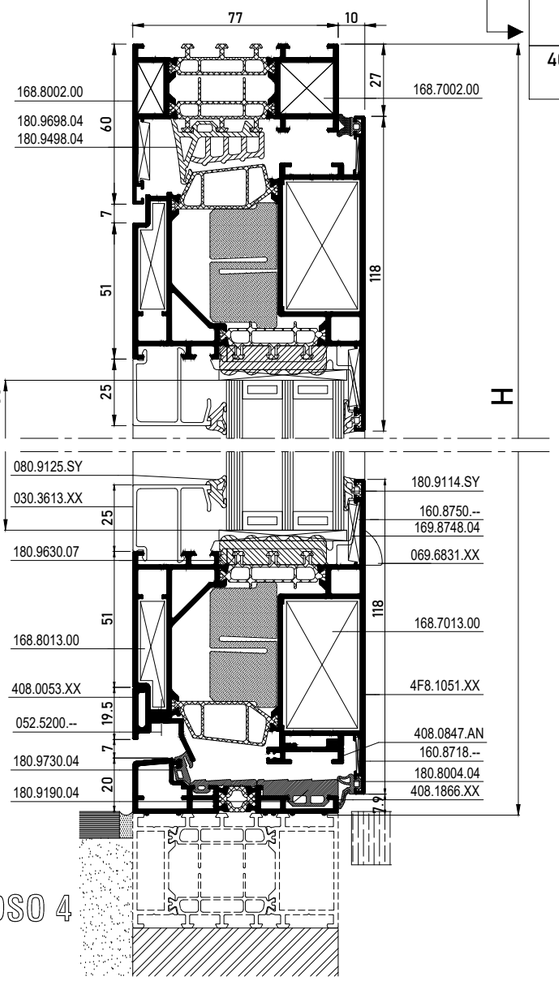

			#	Lm
408.0183.XX			1	B
			1	H
			1	H
4F8.1015.XX			2	B - 54
			2	H - 34.9
030.3613.XX			2	B - 236
			2	H - 265
408.1866.XX			1	B - 66
408.0053.XX			1	B - 138
408.0894.XX			1	B
408.0847.AN			1	B - 138

408.0183.XX			1	B
			1	H - 7.3
			1	H - 7.3
408.1866.XX			1	B

168.7002.00		2
168.8002.00		2
168.7013.00		4
168.8013.00		4
160.8750.--		6
160.8718.--		4
168.8712.00		2
168.8732.00		2
068.9937.--		2
169.8748.04		19H.F. ...
069.6831.XX		19H.F. ...
180.8004.04		B
022.0048.SY		B + (2xH)
180.9114.SY		(2xb)+(2xh)
180.9698.04		B+(2xH)
180.9498.04		2
180.9730.04		B
180.9190.04		B
180.9630.07		(2xB)+(2xH)
080.9125.SY		(2xb)+(2xh)
169.8380.04		1

169.7030.04		1
081.9123.SY		B
052.5200.--		B/300
052.5327.--		B/300
169.8500.--		1

ENKEL VOOR ZICHTBAAR RAAMBESLAG
POUR LES FERRURES DE FENÊTRES VISIBLES UNIQUEMENT
FOR VISIBLE WINDOW HARDWARE ONLY
NUR FÜR SICHTBARE FENSTERBESCHLÄGE

DIN R =	169.8532.--		1
	of / ou / or / oder		
DIN L =	169.8531.--		1
	052.5355.--		1

b = B - 252
h = H - 233

ZIE BEGLAZINGSMETHODE
VOIR METHODE DE VITRAGE
SEE GLAZING METHOD
ZIE VERGLASUNGSWEISE
50mm

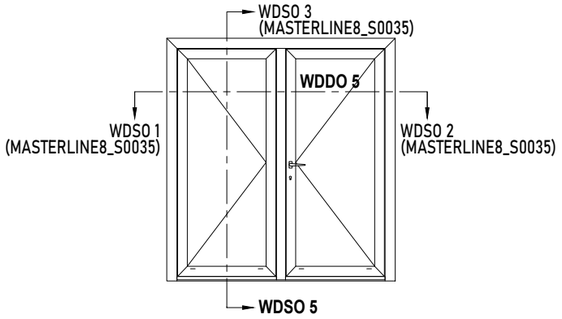

			#	Lm
408.0183.XX			1	B
			1	H
			1	H
4F8.1051.XX			2	B1 - 30.5
			2	B2 - 30.5
			4	H - 35
408.1115.XX			1	H - 77
030.3613.XX			2	B1 - 212.5
			2	B2 - 212.5
			4	H - 267
408.0049.XX			1	B1 - 113.5
			1	B2 - 116.5

b1 = B1 - 228.5
b2 = B2 - 228.5
h = H - 233

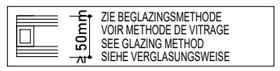

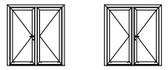

	DIN L	DIN R
169.7300.04	1	2
169.7400.04	2	1

** Plaatsing Eindstukken
** Finition Pieces Finales

** Sealing End Pieces
** Montage Endkappen

RAAMDEURBESLAG > ZIE "OPENING DOORS"
ACCESSOIRES PORTES FENETRES > VOIRE "OPENING DOORS"
WINDOW-DOOR GEAR > SEE "OPENING DOORS"
ZUBEHOR FENSTERTUEREN > SIEHE "OPENING DOORS"

		#
168.7002.00		2
168.8002.00		2
168.7013.00		8
168.8013.00		8
160.8750.--		10
160.8718.--		8
169.8748.04		19H.F. ...
069.6831.XX		19H.F. ...
169.6897.SY		1
052.5327.--		1
052.5318.--		1
080.9125.SY		(2xb1) + (2xb2)
		+ (4xh)
180.8204.04		B+(3XH)
of / ou / or / oder		
022.0048.SY		B+(3XH)
180.9114.SY		(2xb1) + (2xb2)
		+ (4xh)
180.9630.07		2 x B1
		2 x B2
		4 x H
180.9698.04		b1 + b2 + (3xh)
180.9498.04		2
169.7300.SY**		2
081.9091.04		8x75mm
052.5311.--		8
169.7400.SY**		1
081.9091.04		4x75mm
052.5311.--		4
081.9142.04		19H.F. ...
080.9633.07		H

USING ESPAGNOLET

168.7013.00		6
168.7650.00		2

WDDO 5

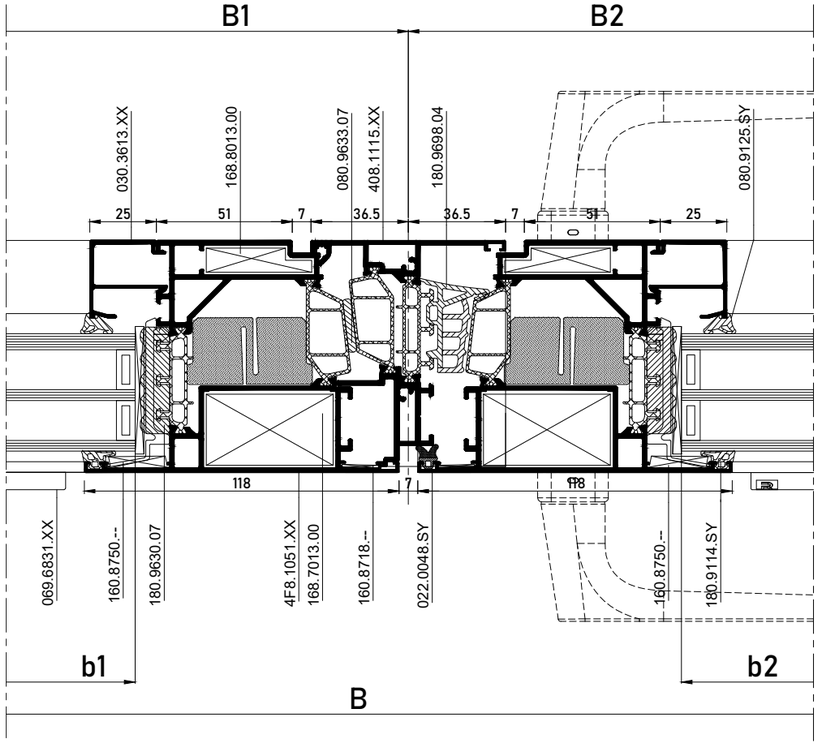

WDSO 5

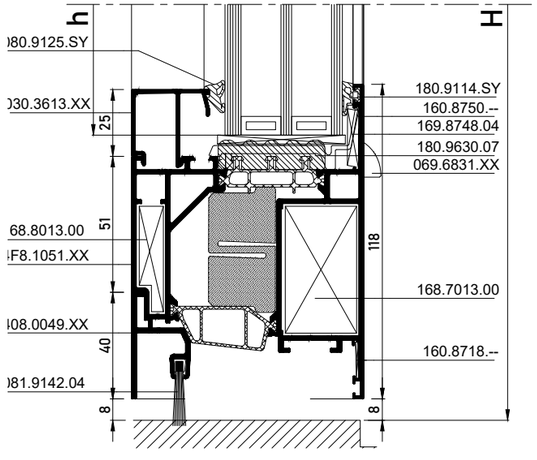

SECTIONS Masterline 8-Fu Balcony Door 2024

WINDOW-DOOR DOUBLE OUTWARD OPENING

MASTERLINE 8-Fu

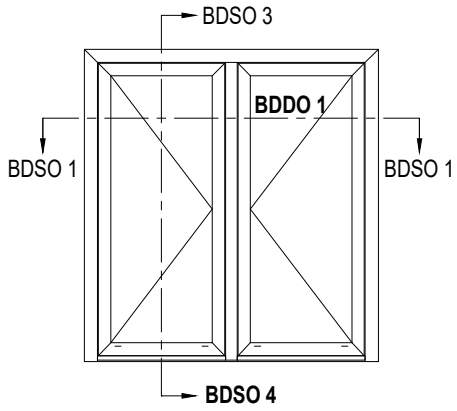

			#	Lm
408.0183.XX			1	B
			1	H
			1	H
4F8.1015.XX			2	B1 - 30.5
			2	B2 - 30.5
			4	H - 35
408.1115.XX			1	H - 102
030.3613.XX			2	B1 - 212.5
			2	B2 - 212.5
			4	H - 265
408.1866.XX			1	B - 66
408.0053.XX			1	B1 - 114.5
			1	B2 - 114.5
408.0894.XX			1	B
408.0847.XX			1	B1 - 114.5
			1	B2 - 114.5

		#
168.7002.00		2
168.8002.00		2
168.7013.00		8
168.8013.00		8
160.8750.--		10
160.8718.--		8
168.8712.00		2
168.8732.00		2
068.9937.--		2
169.8748.04		19H.F. ...
069.6831.XX		19H.F. ...
180.8004.04		B
022.0048.SY		B + (3xH)
180.9114.SY		(4xb)+(4xh)
180.9698.04		(1xB)+(3xH)
180.9498.04		2
180.9730.04		B
180.9190.04		B
180.9630.07		(4xB)+(4xH)
080.9125.SY		(4xb)+(4xh)
169.8380.04		1
169.7030.04		1
081.9123.SY		B
052.5200.--		B/300
052.5327.--		B/300
169.8500.--		2
052.5327.--		2
052.5318.--		2
DIN R = 169.6871.04 of / ou / or / oder		1
DIN L = 169.6874.04		1

b1 = B1-228.5
b2 = B2-228.5
h = H - 233

ZIE BEGLAZINGSMETHODE
VOIR METHODE DE VITRAGE
SEE GLAZING METHOD
ZIE VERGLASUNGSWEISE
50mm

OPTIE / OPTION (*)

RAAMBESLAG > ZIE "OPENING WINDOWS"
ACCESSOIRES FENETRES > VOIRE "OPENING WINDOWS"
WINDOW GEAR > SEE "OPENING WINDOWS"
FENSTERBESCHLAG > SIEHE "OPENING WINDOWS"

RAAMDEURBESLAG > ZIE "OPENING DOORS"
ACCESSOIRES PORTES FENETRES > VOIRE "OPENING DOORS"
WINDOW-DOOR GEAR > SEE "OPENING DOORS"
ZUBEHOR FENSTERTUEREN > SIEHE "OPENING DOORS"

ENKEL VOOR ZICHTBAAR RAAMBESLAG
POUR LES FERRURES DE FENÊTRES VISIBLES UNIQUEMENT
FOR VISIBLE WINDOW HARDWARE ONLY
NUR FÜR SICHTBARE FENSTERBESCHLÄGE

169.8531.--	1
169.8532.--	1

BDDO 1

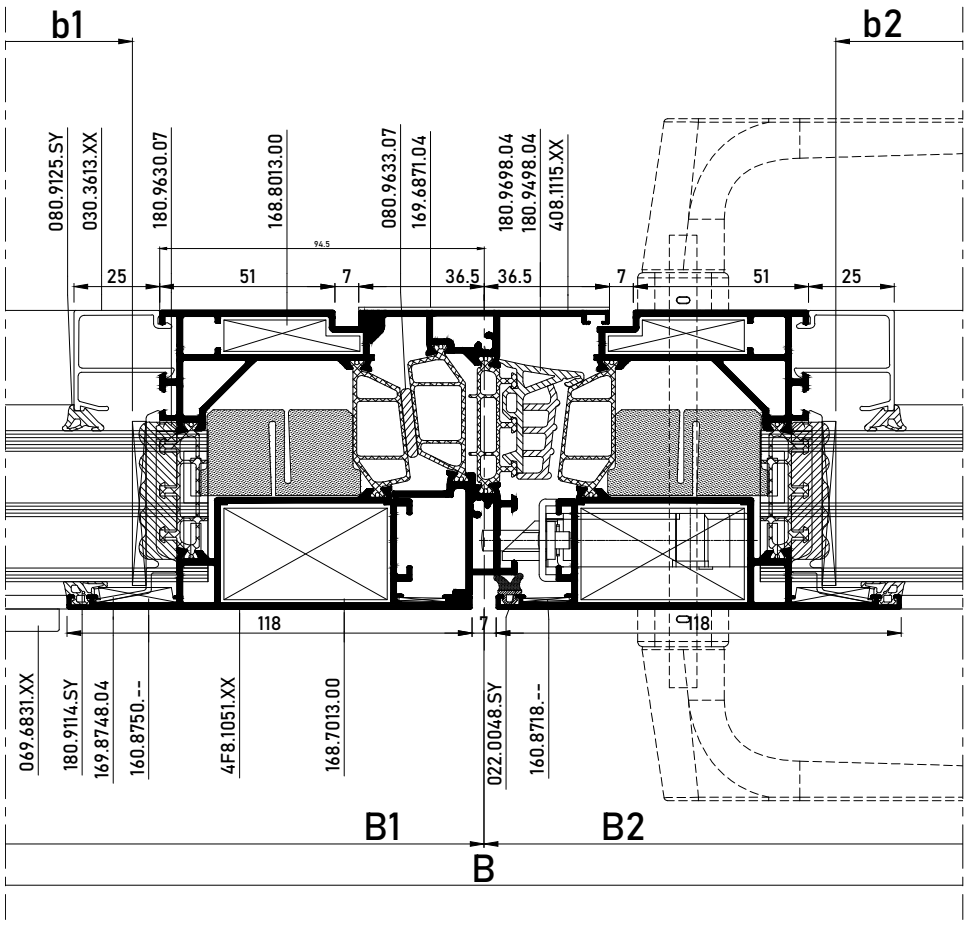

BDSO 4

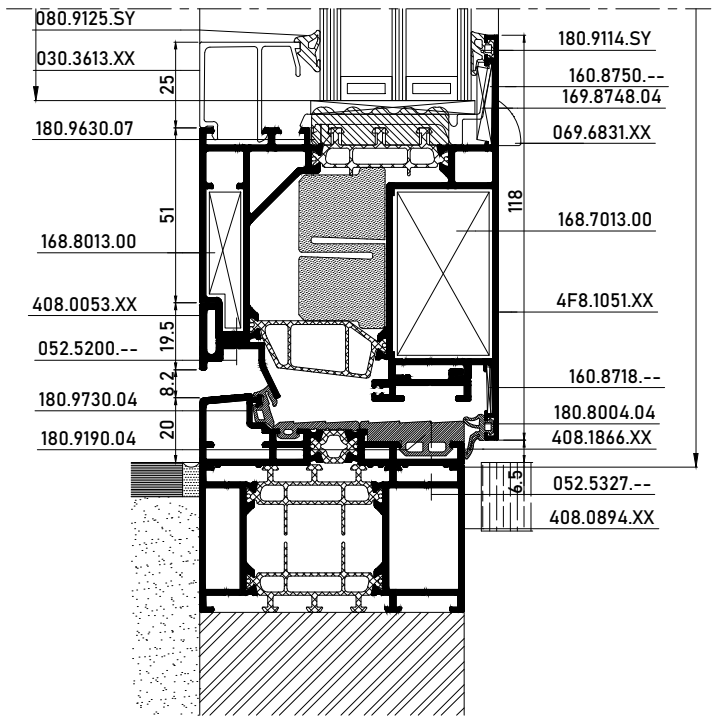

SECTIONS Masterline 8-Fu Balcony Door 2024

WINDOW-DOOR DOUBLE OUTWARD OPENING - VARIANT

MASTERLINE 8-Fu

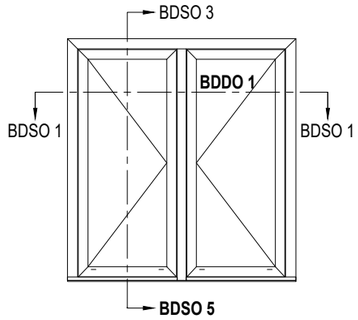

BDDO 1

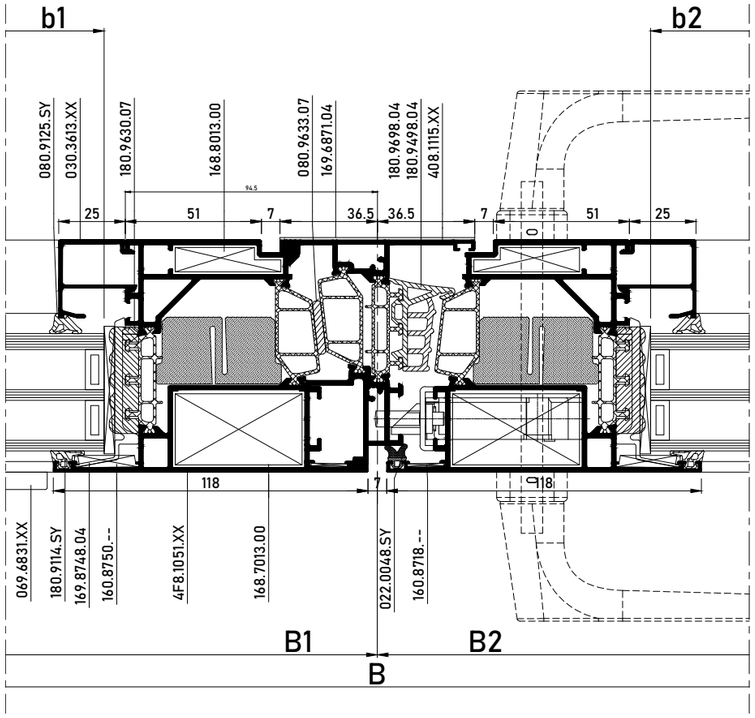

			#	Lm
408.0183.XX			1	B
			1	H
			1	H
4F8.1015.XX			2	B1 - 30.5
			2	B2 - 30.5
			4	H - 35
408.1115.XX			1	H - 100
030.3613.XX			2	B1 - 212.5
			2	B2 - 212.5
			4	H - 265
408.1866.XX			1	B - 66
408.0053.XX			1	B1 - 114.5
			1	B2 - 114.5
408.0894.XX			1	B
408.0847.XX			1	B1 - 114.5
			1	B2 - 114.5

408.0183.XX		1	B
		1	H - 7.3
		1	H - 7.3
408.1866.XX		1	B
408.1115.XX		1	H - 102

168.7002.00		2
168.8002.00		2
168.7013.00		8
168.8013.00		8
160.8750.--		10
160.8718.--		8
168.8712.00		2
168.8732.00		2
068.9937.--		2
169.8748.04		19H.F. ...
069.6831.XX		19H.F. ...
180.8004.04		B
022.0048.SY		B + (3xH)
180.9114.SY		(4xb)+(4xh)
180.9698.04		(1xB)+(3xH)
180.9498.04		2
180.9701.04		B
180.9190.04		B
180.9630.07		(4xB)+(4xH)
080.9125.SY		(4xb)+(4xh)
169.8380.04		1
169.7030.04		1
081.9123.SY		B
052.5200.--		B/300
052.5327.--		B/300
169.8500.--		2
052.5327.--		2
052.5318.--		2
169.6871.04 of / ou / or / oder 169.6874.04		1
		1

DIN R =

DIN L =

b1 = B1-228.5

b2 = B2-228.5

h = H - 233

ZIE BEGLAZINGSMETHODE
VOIR METHODE DE VITRAGE
SEE GLAZING METHOD
ZIE VERGLASUNGSWEISE

OPTIE / OPTION (*)

RAAMBESLAG > ZIE "OPENING WINDOWS"
ACCESSOIRES FENETRES > VOIRE "OPENING WINDOWS"
WINDOW GEAR > SEE "OPENING WINDOWS"
FENSTERBESCHLAG > SIEHE "OPENING WINDOWS"

RAAMDEURBESLAG > ZIE "OPENING DOORS"
ACCESSOIRES PORTES FENETRES > VOIRE "OPENING DOORS"
WINDOW-DOOR GEAR > SEE "OPENING DOORS"
ZUBEHOR FENSTERTUEREN > SIEHE "OPENING DOORS"

ENKEL VOOR ZICHTBAAR RAAMBESLAG
POUR LES FERRURES DE FENÊTRES VISIBLES UNIQUEMENT
FOR VISIBLE WINDOW HARDWARE ONLY
NUR FÜR SICHTBARE FENSTERBESCHLÄGE

169.8531.-- of / ou / or / oder 169.8532.--		1
		1

BDSO 4

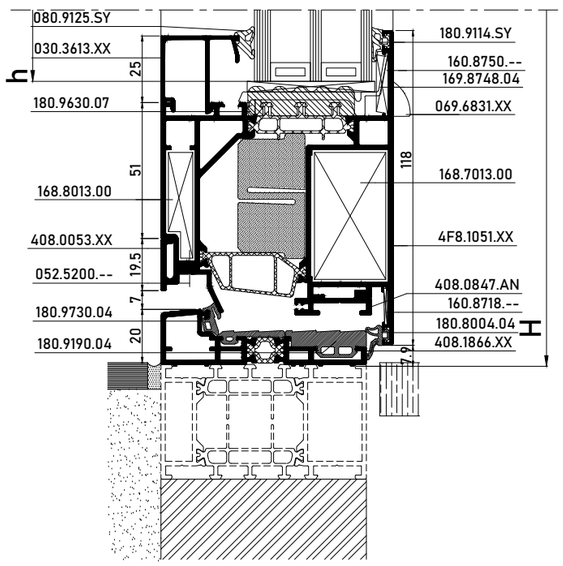

SECTIONS MASTERLINE 8-Fu

WINDOW-DOOR INWARD OPENING WITH PANEL

MASTERLINE 8-Fu

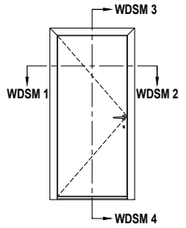

			#	Lm
408.0183.XX			1	B
			1	H
			1	H
408.0266.XX			2	B - 54
			2	H - 35
030.3615.XX			2	B - 214
			2	H - 245
408.0049.XX			1	B - 140

b (in) = B - 226	
h (in) = H - 207	

b (out) = B - 134	
h (out) = H - 117	

MAGNETISCH PANEEL INFO
INFO PANNEAU MAGNETIQUE
MAGNETIC PANEL INFO
MAGNETISCHE PANEL INFORMATIONEN
WWW.HARINCK.BE

		#
168.7002.00		2
168.8002.00		2
168.7113.00		4
168.8113.00		4
160.8750.--		6
160.8718.--		4
069.8768.04		4
180.8204.04 of / ou / or / oder 022.0048.SY		B+(2XH)
		B+(2XH)
180.9114.SY		(2xb) + (2xh)
180.9698.04		B + (2xH)
180.9498.04		2
180.9625.07		(2xB) + (2xH)
080.9126.SY		(2xb) + (2xh)
169.7300.SY		1
081.9091.04		4x75mm
052.5311.--		4
169.7400.SY		1
081.9091.04		4x75mm
052.5311.--		4
081.9142.04		B
081.9055.-- *		1

* Afhankelijk van de vleugelbreedte
* En fonction de la largeur de l'ouvrant
* Depending on vent width
* Abhängig von der Flügelbreite

RAAMDEURBESLAG › ZIE "OPENING DOORS"
ACCESSOIRES PORTES FENETRES › VOIRE "OPENING DOORS"
WINDOW-DOOR GEAR › SEE "OPENING DOORS"
ZUBEHOR FENSTERTUEREN › SIEHE "OPENING DOORS"

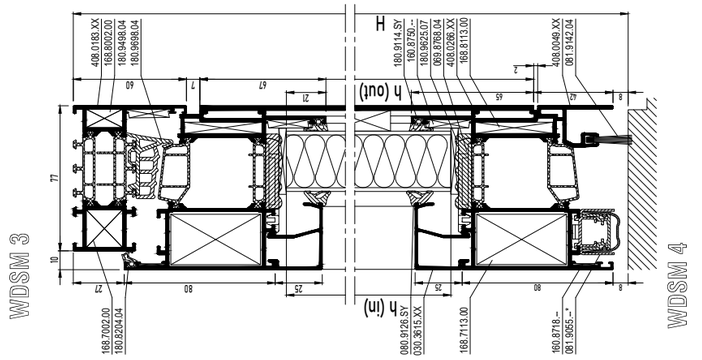

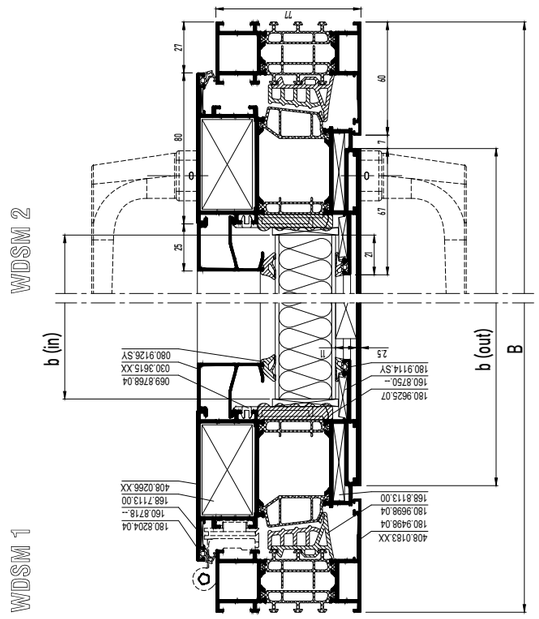

SECTIONS MASTERLINE 8-Fu

DOUBLE WINDOW-DOOR INWARD OPENING WITH PANEL

MASTERLINE 8-Fu

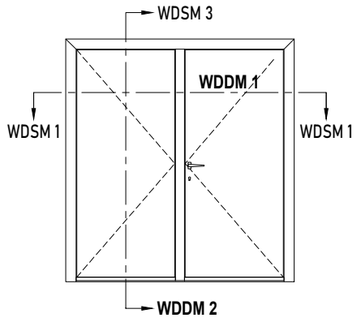

			#	Lm
408.0183.XX			1	B
			1	H
			1	H
408.0266.XX			2	B1 - 30.5
			2	B2 - 30.5
			4	H - 35
408.1115.XX			1	H - 77
030.3615.XX			2	B1 - 190.5
			2	B2 - 190.5
			4	H - 245
408.0049.XX			1	B1 - 113.5
			1	B2 - 116.5

		#
168.7002.00		2
168.8002.00		2
168.7113.00		8
168.8113.00		8
160.8750.--		10
160.8718.--		8
169.8768.04		8
169.6897.SY		1
052.5327.--		1
052.5318.--		1
180.8204.04 of / ou / or / oder 022.0048.SY		B+(3XH)
		B+(3XH)
180.9114.SY		(2xb1) + (2xb2) + (4xh)
180.9698.04		B + (3xH)
180.9498.04		2
180.9625.07		2 x B1
		2 x B2
		4 x H
080.9126.SY		(2xb1) + (2xb2) + (4xh)
169.7300.SY**		1
081.9091.04		4x75mm
052.5311.--		4
169.7400.SY**		2
081.9091.04		8x75mm
052.5311.--		8
080.9633.07		H
081.9142.04		B

USING ESPAGNOLET

168.7113.00		6
168.7650.00		2

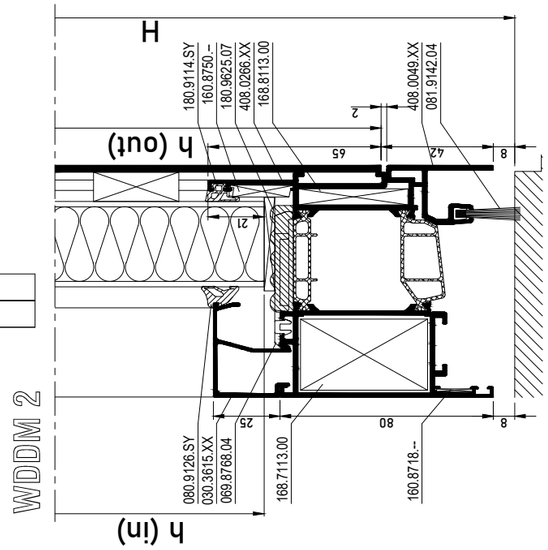

b1 (in) = B1 - 202.5			
b2 (in) = B2 - 202.5			
h (in) = H - 207			

b1 (out) = B1 - 110.5			
b2 (out) = B2 - 110.5			
h (out) = H - 117			

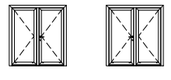

	DIN L	DIN R
169.7300.04	1	2
169.7400.04	2	1

** Plaatsing Eindstukken
** Finition Pieces Finales

** Sealing End Pieces
** Montage Endkappen

MAGNETISCH PANEEL INFO
INFO PANNEAU MAGNÉTIQUE
MAGNETIC PANEL INFO
MAGNETISCHE PANEL INFORMATIONEN
WWW.HARINCK.BE

RAAMDEURBESLAG > ZIE "OPENING DOORS"
ACCESSOIRES PORTES FENETRES > VOIRE "OPENING DOORS"
WINDOW-DOOR GEAR > SEE "OPENING DOORS"
ZUBEHOR FENSTERTUEREN > SIEHE "OPENING DOORS"

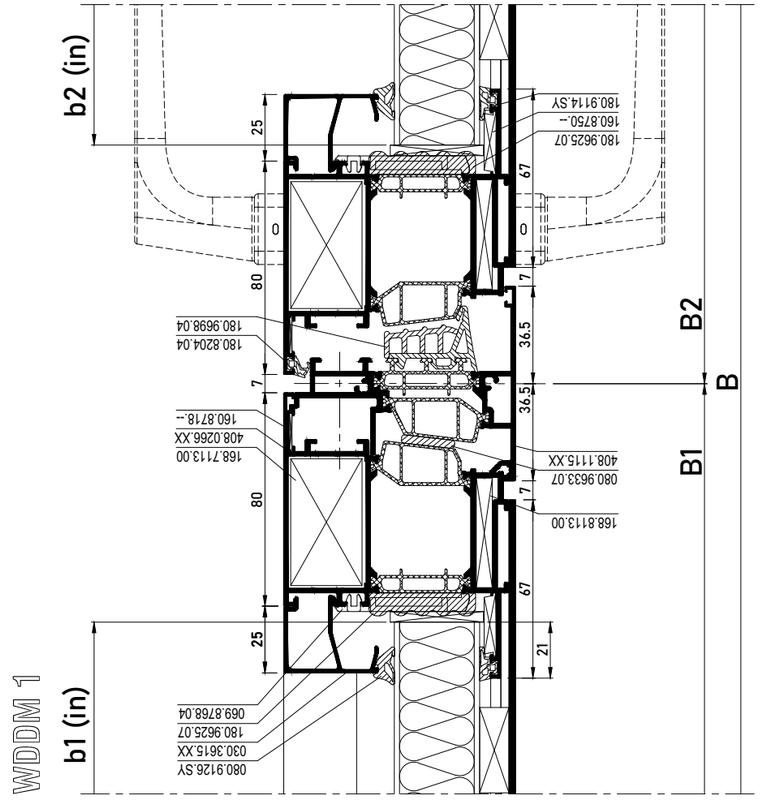

SECTIONS Masterline 8-Fu Balcony Door 2024

COMBINED WINDOW-DOOR OUTWARD OPENING

MASTERLINE 8-Fu

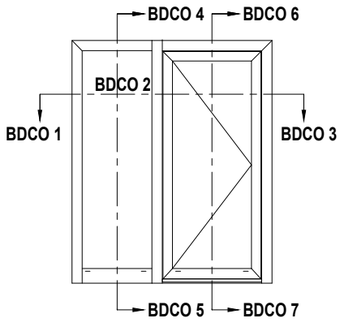

b1 = B1 - 65.5
h1 = H1 - 135
b2 = B2 - 235.5
h2 = H2 - 232

		#	Lm
408.0183.XX		1	B2 - 16.5
		1	B1 - 16.5
		1	H2
		1	H1
408.1142.XX		1	B1 - 49.5
408.0453.XX		1	H2
4F8.1015.XX		2	B2 - 37.5
		2	H2 - 34
030.3613.XX		2	B2 - 219.5
		2	H2 - 266
030.3610.XX		2	B1 - 49.5
		2	H1 - 169
408.1866.XX		1	B2 - 49.5
408.0847.XX		1	B2 - 121.5
408.0053.XX		1	B2 - 121.5
408.0894.XX		1	B

ENKEL VOOR ZICHTBAAR RAAMBESLAG
POUR LES FERRURES DE FENÊTRES VISIBLES UNIQUEMENT
FOR VISIBLE WINDOW HARDWARE ONLY
NUR FÜR SICHTBARE FENSTERBESCHLÄGE

169.8531.--		1
of / ou / or / oder		
169.8532.--		1

	#
168.7002.00	2
168.8002.00	2
168.7013.00	4
168.8013.00	4
160.8750.--	10
160.8718.--	4
168.8712.00	7
168.8742.00	6
168.5012.--	6
168.8732.00	1
068.9937.--	1
169.8748.04	19H.F. ...
069.6831.XX	19H.F. ...
022.0048.SY	B2+(2xH2)
180.8004.04	B2
180.9114.SY	(2Xb1)+(2Xh1)
	(2Xb2)+(2Xh2)
180.9698.04	B2+(2xH2)
180.9498.04	2
180.9730.04	B2
180.9190.04*	B2
080.9637.04	2XB1
180.9630.07	(2XB1)+(2XH1)
	(2XB2)+(2XH2)
080.9125.SY	(2Xb1)+(2Xh1)
	(2Xb2)+(2Xh2)
169.8380.04	1
169.7030.04	1
052.5200.--	B2/300
052.5327.--	B2/300
052.5315.--	B1/300
052.5329.--	B1/300

RAAMDEURBESLAG > ZIE "OPENING DOORS"
ACCESSOIRES PORTES FENETRES > VOIRE "OPENING DOORS"
WINDOW-DOOR GEAR > SEE "OPENING DOORS"
ZUBEHOR FENSTERTUEREN > SIEHE "OPENING DOORS"

ZIE BEGLAZINGSMETHODE
VOIR METHODE DE VITRAGE
SEE GLAZING METHOD
ZIE VERGLASUNGSWEISE

OPTIE / OPTION (*)

RAAMBESLAG > ZIE "OPENING WINDOWS"
ACCESSOIRES FENETRES > VOIRE "OPENING WINDOWS"
WINDOW GEAR > SEE "OPENING WINDOWS"
FENSTERBESCHLAG > SIEHE "OPENING WINDOWS"

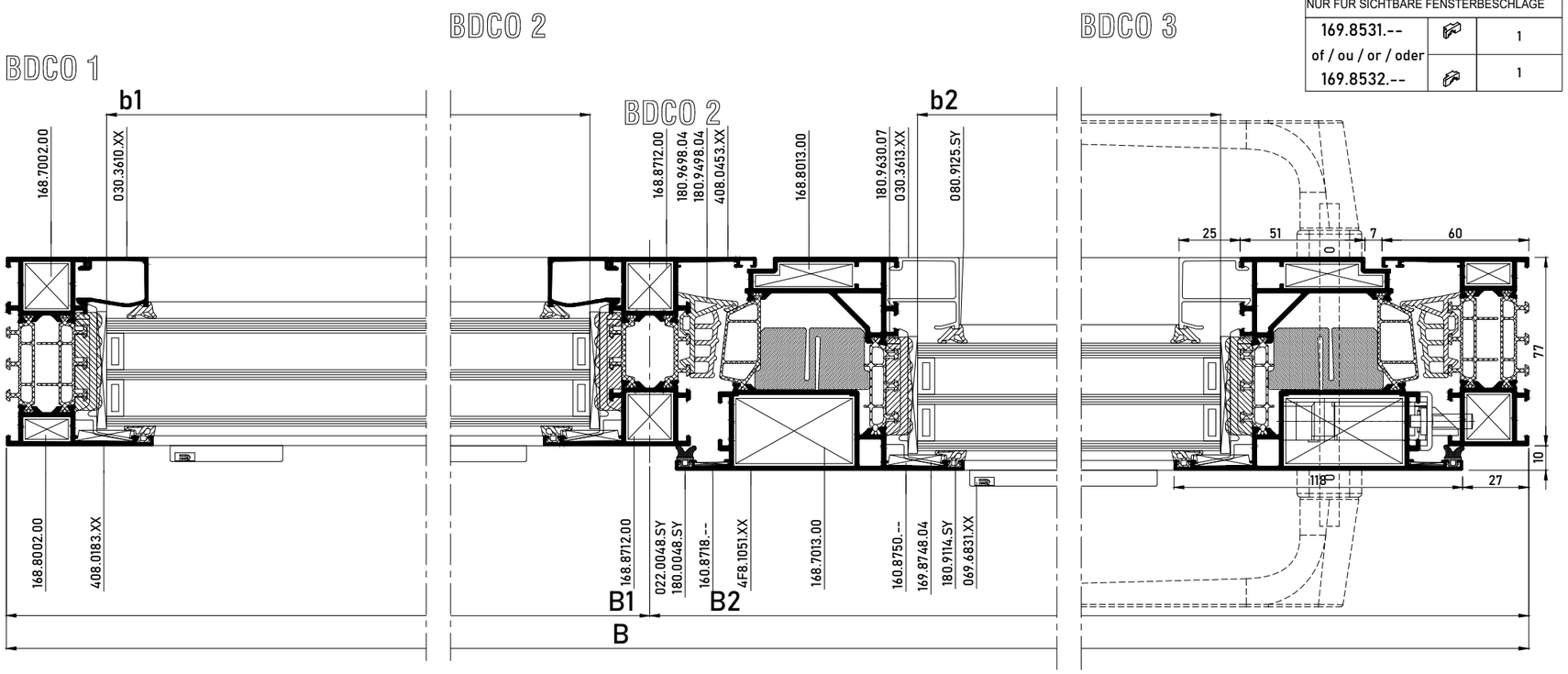

BDCO 4

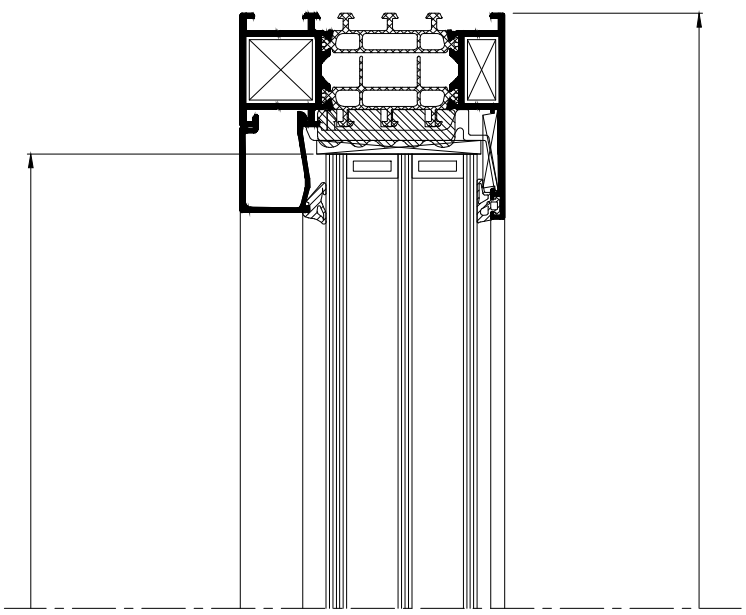

BDCO 6

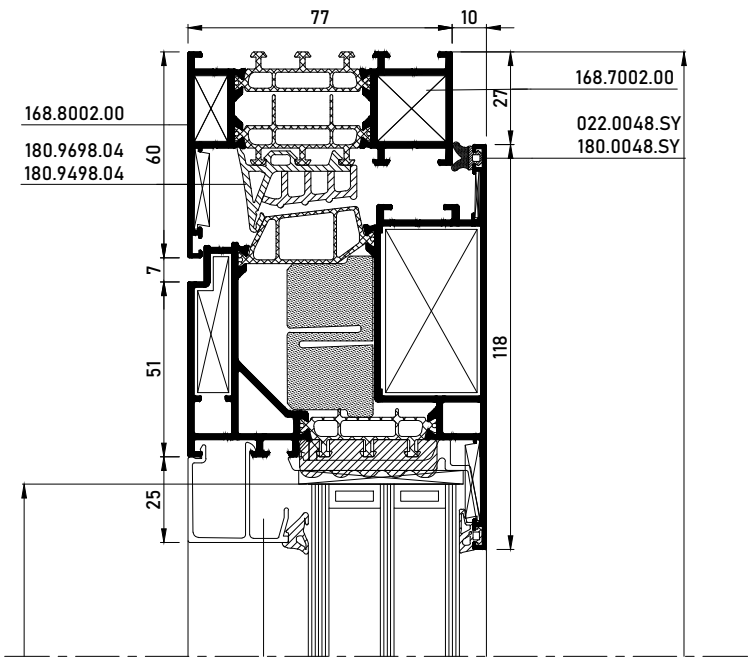

BDCO 5

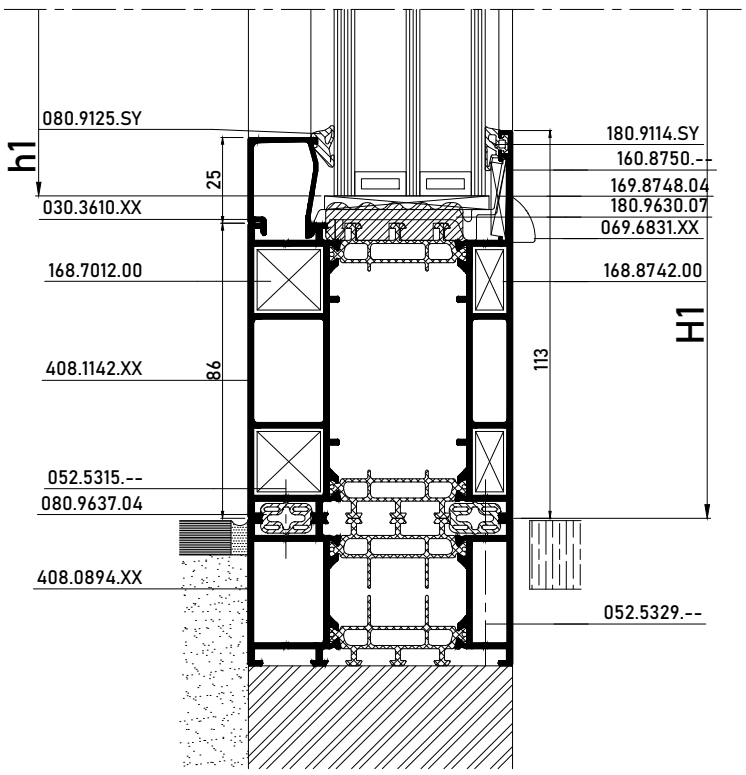

BDCO 7

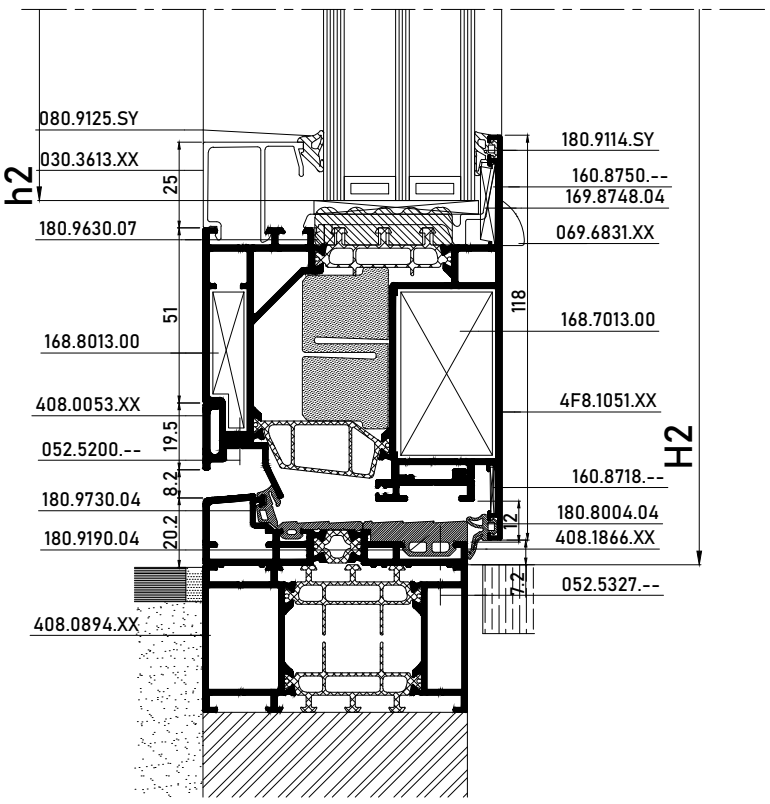

SECTIONS Masterline 8-Fu Balcony Door 2024

COMBINED WINDOW-DOOR OUTWARD OPENING - VARIANT

MASTERLINE 8-Fu

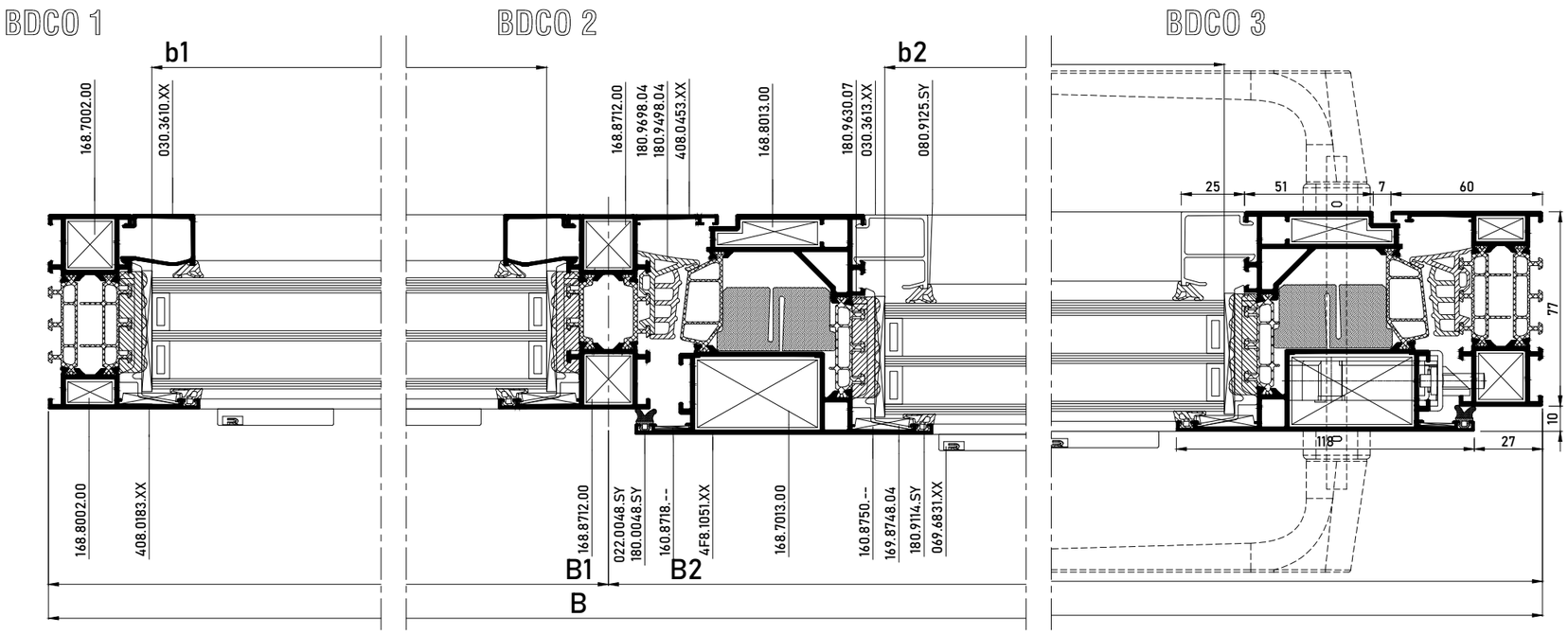

SECTIONS Masterline 8-Fu Balcony Door 2024

COMBINED WINDOW-DOOR OUTWARD OPENING - VARIANT

MASTERLINE 8-Fu

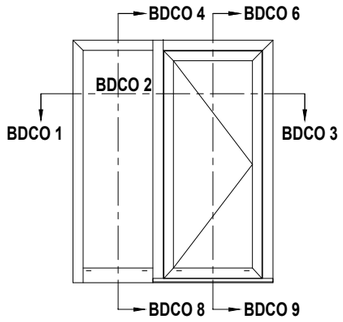

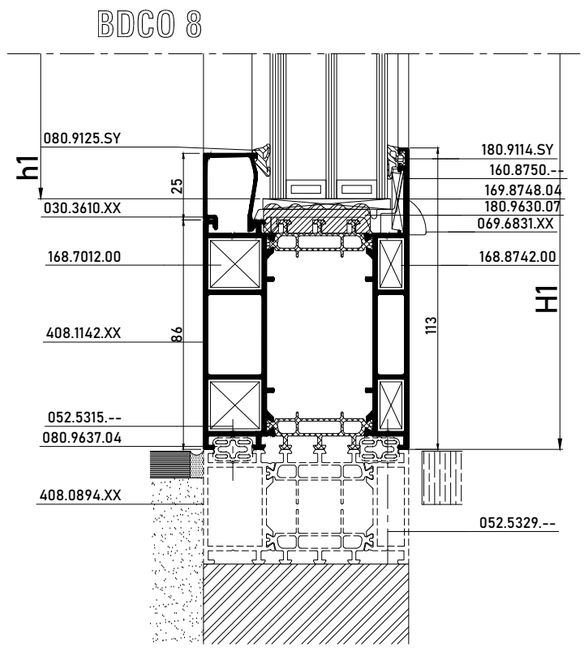

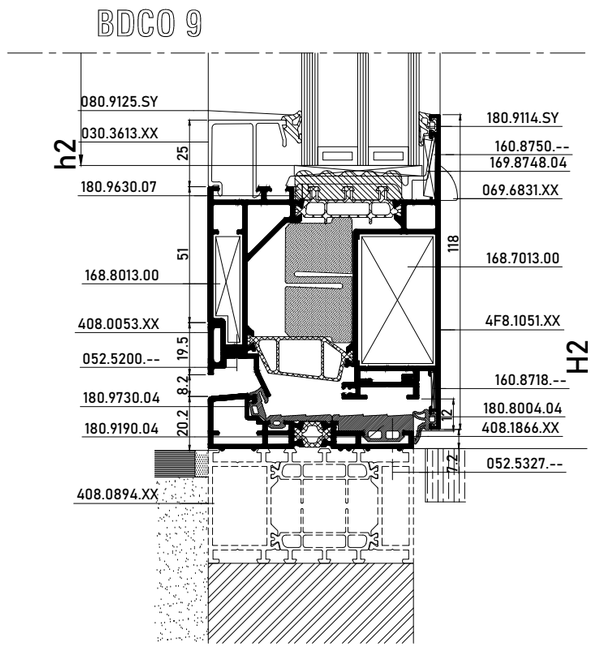

			#	Lm
408.0183.XX			1	B2 - 16.5
			1	B1 - 16.5
			1	H2
			1	H1
408.1142.XX			1	B1 - 49.5
408.0453.XX			1	H2
4F8.1015.XX			2	B2 - 37.5
			2	H2 - 34
030.3613.XX			2	B2 - 219.5
			2	H2 - 266
030.3610.XX			2	B1 - 49.5
			2	H1 - 169
408.1866.XX			1	B2 - 49.5
408.0847.XX			1	B2 - 121.5
408.0053.XX			1	B2 - 121.5
408.0894.XX			1	B

168.7002.00		2
168.8002.00		2
168.7013.00		4
168.8013.00		4
160.8750.--		10
160.8718.--		4
168.8712.00		7
168.8742.00		6
168.5012.--		6
168.8732.00		1
068.9937.--		1
169.8748.04		19H.F. ...
069.6831.XX		19H.F. ...
022.0048.SY		B2+(2xH2)
180.8004.04		B2
180.9114.SY		(2Xb1)+(2Xh1)
		(2Xb2)+(2Xh2)
180.9698.04		B2+(2xH2)
180.9498.04		2
180.9730.04		B2
180.9190.04*		B2
080.9637.04		2XB1
180.9630.07		(2XB1)+(2XH1)
		(2XB2)+(2XH2)
080.9125.SY		(2Xb1)+(2Xh1)
		(2Xb2)+(2Xh2)
169.8380.04		1
169.7030.04		1
052.5200.--		B2/300
052.5327.--		B2/300
052.5315.--		B1/300
052.5329.--		B1/300

168.8712.00		6
168.8742.00		4
168.5012.--		4
168.8732.00		2
068.9937.--		2

			#	Lm
408.0183.XX			1	B2 - 16.5
			1	B1 - 16.5
			1	H2 - 6.5
			1	H1
408.0453.XX			1	H2 - 6.5
408.1866.XX			1	B2 + 43.5

b1 = B1 - 65.5
h1 = H1 - 135
b2 = B2 - 235.5
h2 = H2 - 232

OPTIE / OPTION (*)

50mm
ZIE BEGLAZINGSMETHODE
VOIR METHODE DE VITRAGE
SEE GLAZING METHOD
ZIE VERGLASUNGSWEISE

ENKEL VOOR ZICHTBAAR RAAMBESLAG
POUR LES FERRURES DE FENÊTRES VISIBLES UNIQUEMENT
FOR VISIBLE WINDOW HARDWARE ONLY
NUR FÜR SICHTBARE FENSTERBESCHLÄGE

169.8531.--		1
of / ou / or / oder		
169.8532.--		1

RAAMBESLAG > ZIE "OPENING WINDOWS"
ACCESSOIRES FENETRES > VOIRE "OPENING WINDOWS"
WINDOW GEAR > SEE "OPENING WINDOWS"
FENSTERBESCHLAG > SIEHE "OPENING WINDOWS"

RAAMDEURBESLAG > ZIE "OPENING DOORS"
ACCESSOIRES PORTES FENETRES > VOIRE "OPENING DOORS"
WINDOW-DOOR GEAR > SEE "OPENING DOORS"
ZUBEHOR FENSTERTUEREN > SIEHE "OPENING DOORS"

SECTIONS Masterline 8-Fu Balcony Door 2024

BALCONY DOOR SINGLE INWARD OPENING (CONCEALED HARDWARE) HI -> HI+

MASTERLINE 8-Fu

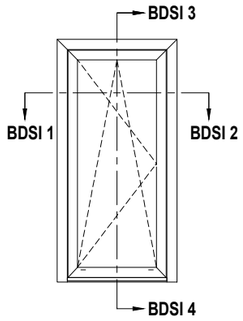

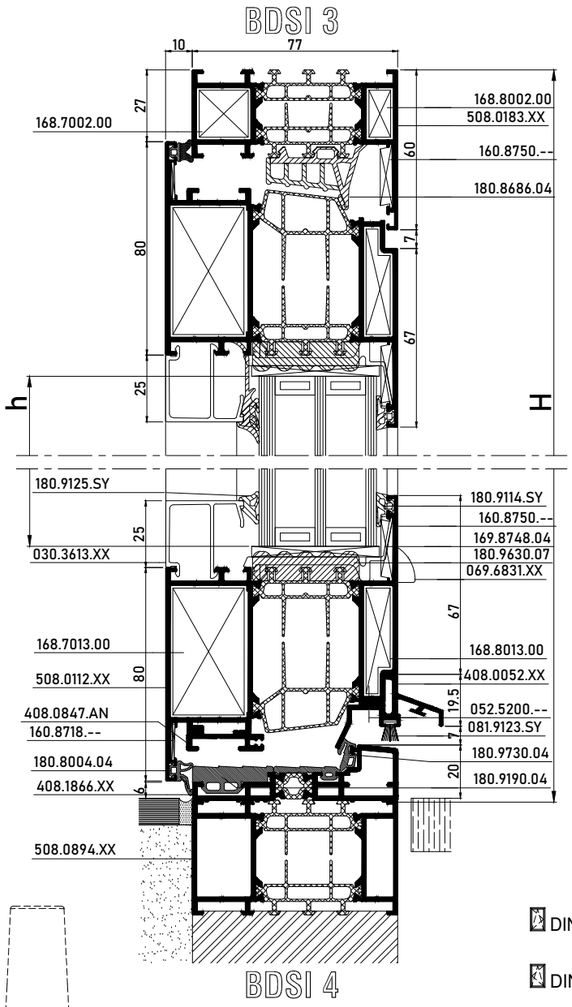

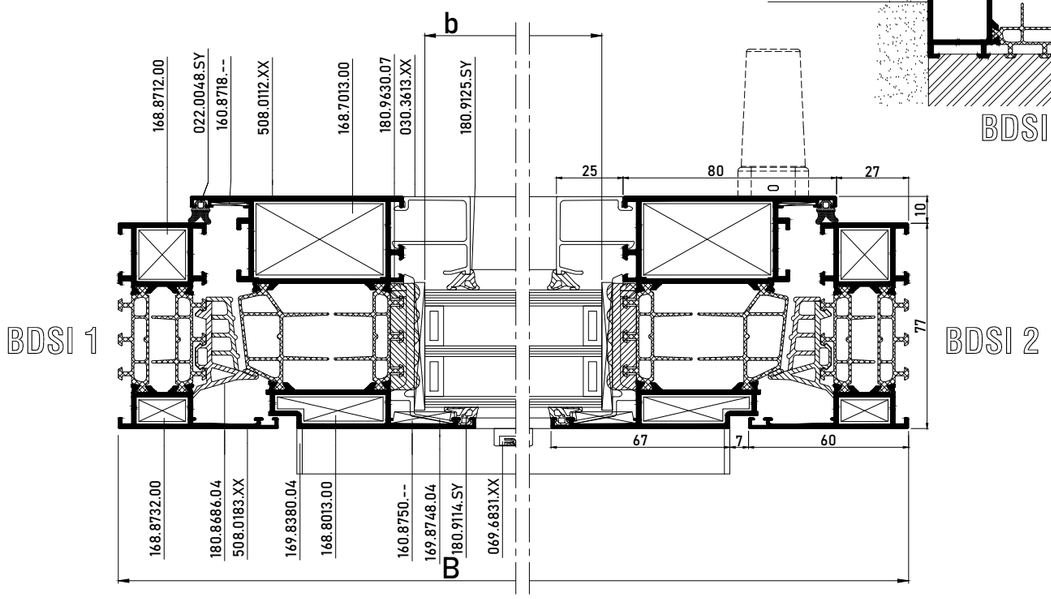

			#	Lm
408.0183.XX			1	B
			1	H
			1	H
408.0112.XX			2	B - 54
			2	H - 33
030.3613.XX			2	B - 214
			2	H - 243
408.1866.XX			1	B - 66
408.0052.XX			1	B - 138
408.0894.XX			1	B
408.0847.AN			1	B - 138

			#
508.0183.XX			1	B
			1	H
			1	H
508.0112.XX			2	B - 54
			2	H - 35
508.0894.XX			1	B

180.8686.04		B+(2xH)

		#
168.7002.00		2
168.8002.00		2
168.7013.00		4
168.8013.00		4
160.8750.--		6
160.8718.--		4
168.8712.00		2
168.8732.00		2
068.9937.--		2
169.8748.04		19H.F. ...
069.6831.XX		19H.F. ...
180.8004.04		B
022.0048.SY		B + (2xH)
180.9114.SY		(2xb)+(2xh)
180.9730.04		B
180.9190.04		B
169.8380.04		1
169.7030.04		1
081.9123.SY		B
052.5200.--		B/300
052.5327.--		B/300
169.8500.--		1

180.9498.04		2
180.9698.04		B+(2xH)

DIN R =

DIN L =

ENKEL VOOR ZICHTBAAR RAAMBESLAG
POUR LES FERRURES DE FENÊTRES VISIBLES UNIQUEMENT
FOR VISIBLE WINDOW HARDWARE ONLY
NUR FÜR SICHTBARE FENSTERBESCHLÄGE

169.8532.--		1
of / ou / or / oder		
169.8531.--		1
052.5355.--		1

OPTIE / OPTION (*)

RAAMBESLAG > ZIE "OPENING WINDOWS"
ACCESSOIRES FENETRES > VOIRE "OPENING WINDOWS"
WINDOW GEAR > SEE "OPENING WINDOWS"
FENSTERBESCHLAG > SIEHE "OPENING WINDOWS"

RAAMDEURBESLAG > ZIE "OPENING DOORS"
ACCESSOIRES PORTES FENETRES > VOIRE "OPENING DOORS"
WINDOW-DOOR GEAR > SEE "OPENING DOORS"
ZUBEHOR FENSTERTUEREN > SIEHE "OPENING DOORS"

50mm

ZIE BEGLAZINGSMETHODE
VOIR METHODE DE VITRAGE
SEE GLAZING METHOD
ZIE VERGLASUNGSWEISE

b = B - 230
h = H - 211

SECTIONS Masterline 8-Fu Balcony Door 2024

BALCONY DOOR SINGLE INWARD OPENING WITH PANEL (CONCEALED HARDWARE)

MASTERLINE 8-Fu

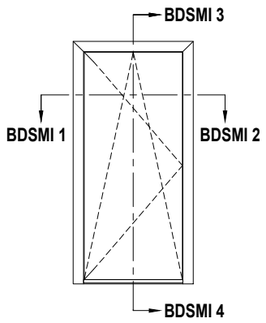

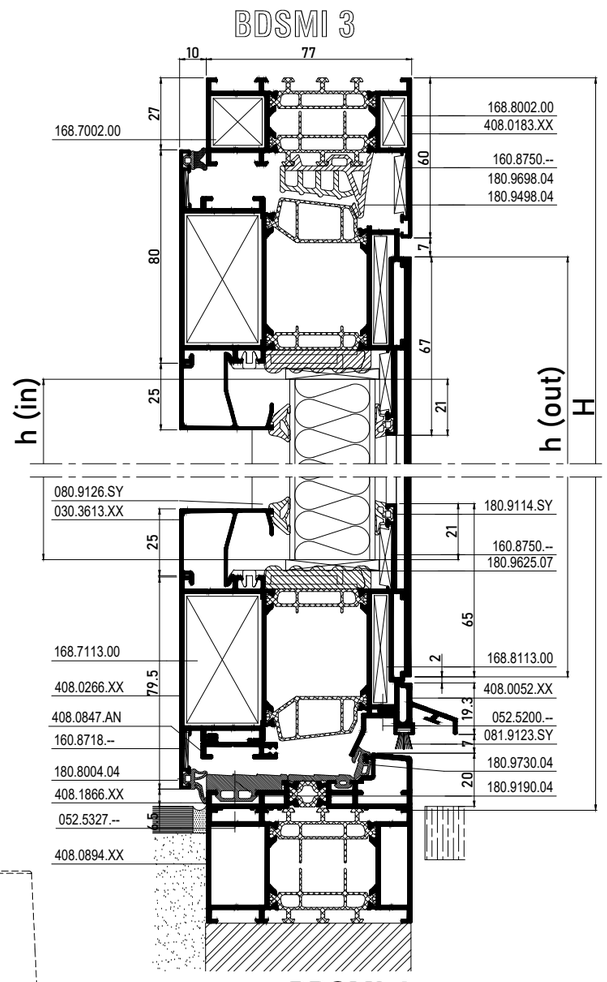

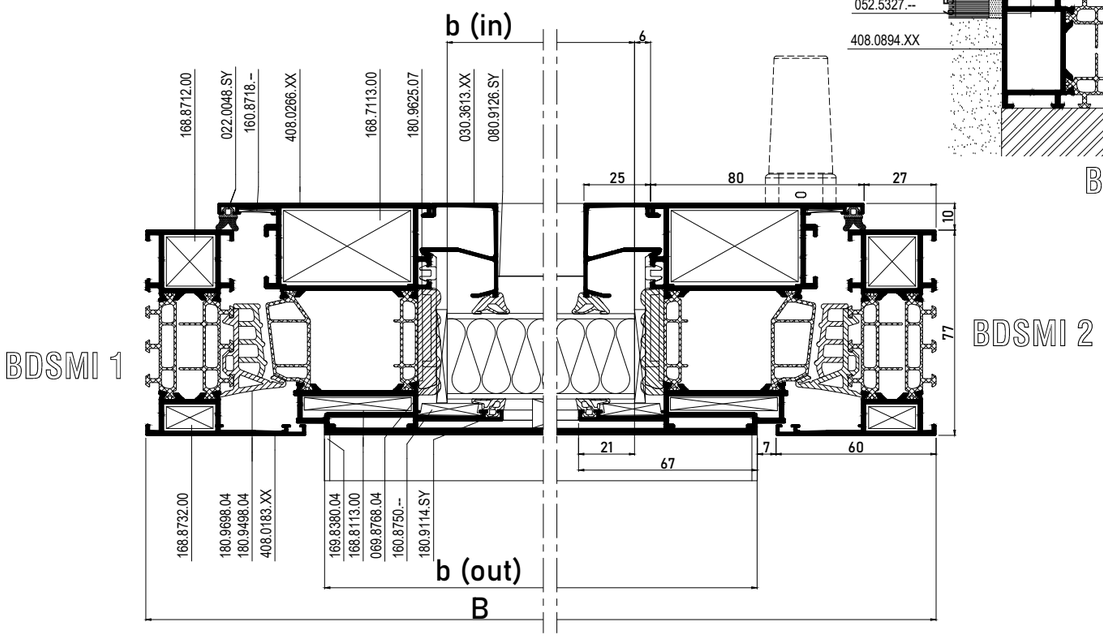

			#	Lm
408.0183.XX			1	B
			1	H
			1	H
408.0266.XX			2	B - 54
			2	H - 35
030.3613.XX			2	B - 214
			2	H - 243
408.1866.XX			1	B - 66
408.0052.XX			1	B - 138
408.0894.XX			1	B
408.0847.AN			1	B - 138

b(in) = B - 226
h(in) = H - 207

b(out) = B - 134
h(out) = H - 117

50mm
ZIE BEGLAZINGSMETHODE
VOIR METHODE DE VITRAGE
SEE GLAZING METHOD
ZIE VERGLASUNGSWEISE

		#
168.7002.00		2
168.8002.00		2
168.7113.00		4
168.8113.00		4
160.8750.--		6
160.8718.--		4
168.8712.00		2
168.8732.00		2
068.9937.--		2
069.8768.04		19H.F. ...
180.8004.04		B
022.0048.SY		B + (2xH)
180.9114.SY		(2xb)+(2xh)
180.9698.04		B+(2xH)
180.9498.04		2
180.9730.04		B
180.9190.04		B
180.9625.07		(2xB)+(2xH)
080.9126.SY		(2xb)+(2xh)
169.8380.04		1
169.7030.04		1
081.9123.SY		B
052.5200.--		B/300
052.5327.--		B/300
169.8500.--		1

ENKEL VOOR ZICHTBAAR RAAMBESLAG
POUR LES FERRURES DE FENÊTRES VISIBLES UNIQUEMENT
FOR VISIBLE WINDOW HARDWARE ONLY
NUR FÜR SICHTBARE FENSTERBESCHLÄGE

DIN R =	169.8532.--		1
	of / ou / or / oder		
DIN L =	169.8531.--		1
	052.5355.--		1

MAGNETISCH PANEEL INFO
INFO PANNEAU MAGNÉTIQUE
MAGNETIC PANEL INFO
MAGNETISCHE PANEL INFORMATIONEN
WWW.HARINCK.BE

OPTIE / OPTION (*)

RAAMBESLAG > ZIE "OPENING WINDOWS"
ACCESSOIRES FENETRES > VOIRE "OPENING WINDOWS"
WINDOW GEAR > SEE "OPENING WINDOWS"
FENSTERBESCHLAG > SIEHE "OPENING WINDOWS"

RAAMDEURBESLAG > ZIE "OPENING DOORS"
ACCESSOIRES PORTES FENETRES > VOIRE "OPENING DOORS"
WINDOW-DOOR GEAR > SEE "OPENING DOORS"

SECTIONS Masterline 8-Fu Balcony Door 2024

BALCONY DOOR SINGLE INWARD OPENING WITH PANEL (CONCEALED HARDWARE) - VARIANT

MASTERLINE 8-Fu

			#	Lm
408.0183.XX			1	B
			1	H
			1	H
408.0266.XX			2	B - 54
			2	H - 35
030.3613.XX			2	B - 214
			2	H - 243
408.1866.XX			1	B - 66
408.0052.XX			1	B - 138
408.0894.XX			1	B
408.0847.AN			1	B - 138

			#	
408.0183.XX			1	B
			1	H - 7.3
			1	H - 7.3
408.1866.XX			1	B

168.7002.00		2
168.8002.00		2
168.7113.00		4
168.8113.00		4
160.8750.--		6
160.8718.--		4
168.8712.00		2
168.8732.00		2
068.9937.--		2
069.8768.04		19H.F. ...
180.8004.04		B
022.0048.SY		B + (2xH)
180.9114.SY		(2xb)+(2xh)
180.9698.04		B+(2xH)
180.9498.04		2
180.9701.04		B
180.9190.04		B
180.9625.07		(2xB)+(2xH)
080.9126.SY		(2xb)+(2xh)
169.8380.04		1
169.7030.04		1
081.9123.SY		B
052.5200.--		B/300
052.5327.--		B/300
169.8500.--		1

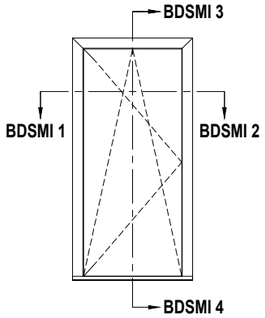

b(in) = B - 226
h(in) = H - 207

b(out) = B - 134
h(out) = H - 117

50mm
ZIE BEGLAZINGSMETHODE
VOIR METHODE DE VITRAGE
SEE GLAZING METHOD
ZIE VERGLASUNGSWEISE

MAGNETISCH PANEEL INFO
INFO PANNEAU MAGNÉTIQUE
MAGNETIC PANEL INFO
MAGNETISCHE PANEL INFORMATIONEN
WWW.HARINCK.BE

DIN R =

DIN L =

OPTIE / OPTION (*)

RAAMBESLAG > ZIE "OPENING WINDOWS"
ACCESSOIRES FENETRES > VOIRE "OPENING WINDOWS"
WINDOW GEAR > SEE "OPENING WINDOWS"
FENSTERBESCHLAG > SIEHE "OPENING WINDOWS"

RAAMDEURBESLAG > ZIE "OPENING DOORS"
ACCESSOIRES PORTES FENETRES > VOIRE "OPENING DOORS"
WINDOW-DOOR GEAR > SEE "OPENING DOORS"

ENKEL VOOR ZICHTBAAR RAAMBESLAG
POUR LES FERRURES DE FENÊTRES VISIBLES UNIQUEMENT
FOR VISIBLE WINDOW HARDWARE ONLY
NUR FÜR SICHTBARE FENSTERBESCHLÄGE

169.8532.--		1
of / ou / or / oder		
169.8531.--		1
052.5355.--		1

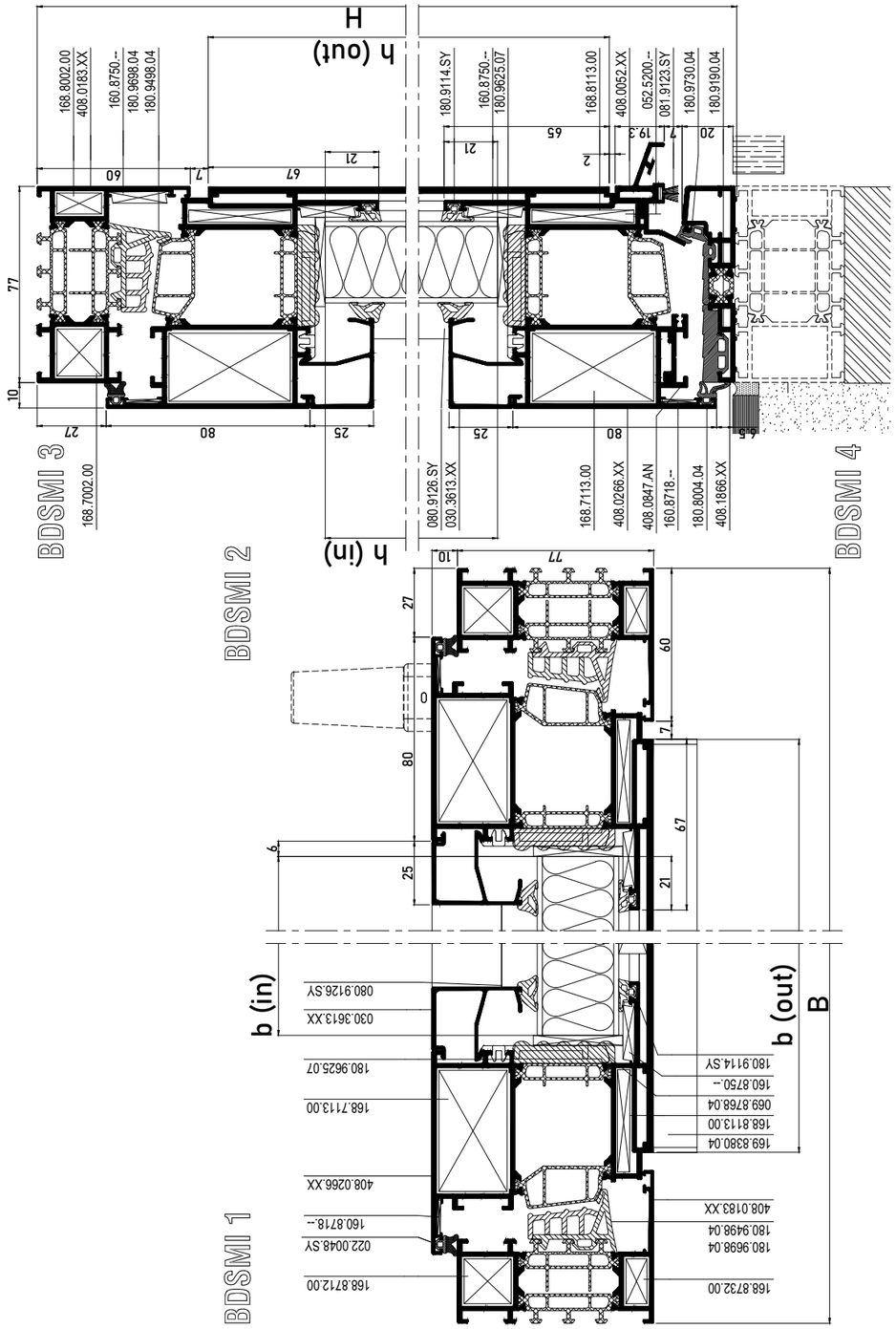

SECTIONS Masterline 8-Fu Balcony Door 2024

BALCONY DOOR DOUBLE INWARD OPENING WITH PANEL (CONCEALED HARDWARE)

MASTERLINE 8-Fu

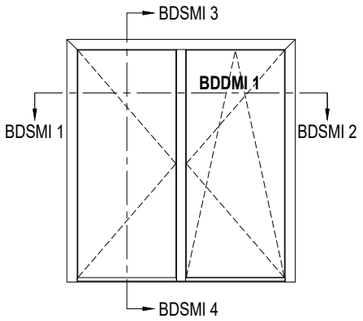

BDDMI 1

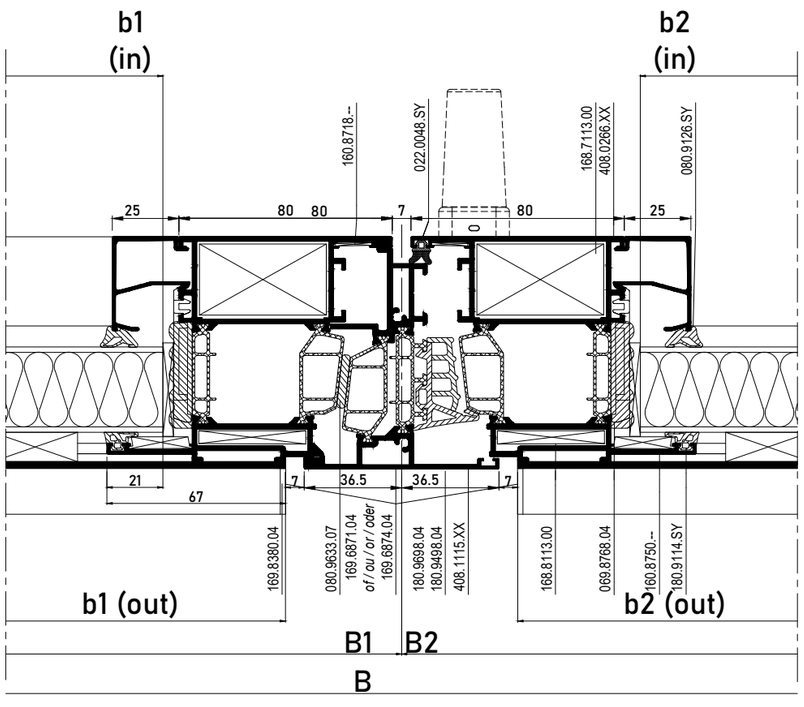

BDSMI 4

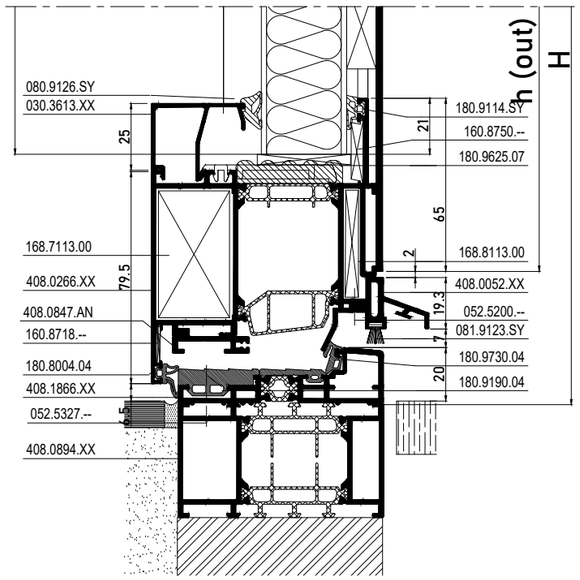

			#	Lm
408.0183.XX			1	B
			1	H
			1	H
408.0266.XX			2	B1 - 30.5
			2	B2 - 30.5
			4	H - 35
408.1115.XX			1	H - 102
030.3615.XX			2	B1 - 190.5
			2	B2 - 190.5
			4	H - 243
408.1866.XX			1	B - 66
408.0052.XX			1	B1 - 114.5
			1	B2 - 114.5
408.0894.XX			1	B
408.0847.AN			1	B1 - 114.5
			1	B2 - 114.5

		#
168.7002.00		2
168.8002.00		2
168.7113.00		8
168.8113.00		8
160.8750.--		10
160.8718.--		8
168.8712.00		2
168.8732.00		2
068.9937.--		2
069.8768.04		19H.F. ...
069.6831.XX		19H.F. ...
180.8004.04		B
022.0048.SY		B + (3xH)
180.9114.SY		(4xb)+(4xh)
180.9698.04		(1xB)+(3xH)
180.9498.04		2
180.9730.04		B
180.9190.04		B
180.9630.07		(4xB)+(4xH)
080.9125.SY		(4xb)+(4xh)
169.8380.04		1
169.7030.04		1
081.9123.SY		B
052.5200.--		B/300
052.5327.--		B/300
169.8500.--		2
052.5327.--		2
052.5318.--		2
169.6871.04		1
169.8542.04		1
169.6874.04		1
169.8541.04		1

b1(in)=B1-202.5
b2(in)=B2-205.5
h (in) = H - 207

b1(out)=B1-110.5
b2(out)=B2-110.5
h(out)=H - 117

ZIE BEGLAZINGSMETHODE
VOIR METHODE DE VITRAGE
SEE GLAZING METHOD
ZIE VERGLASUNGSWEISE
50mm

DIN R =

DIN L =

OPTIE / OPTION (*)

RAAMBESLAG > ZIE "OPENING WINDOWS"
ACCESSOIRES FENETRES > VOIRE "OPENING WINDOWS"
WINDOW GEAR > SEE "OPENING WINDOWS"
FENSTERBESCHLAG > SIEHE "OPENING WINDOWS"

RAAMDEURBESLAG > ZIE "OPENING DOORS"
ACCESSOIRES PORTES FENETRES > VOIRE "OPENING DOORS"
WINDOW-DOOR GEAR > SEE "OPENING DOORS"

MAGNETISCH PANEEL INFO
INFO PANNEAU MAGNÉTIQUE
MAGNETIC PANEL INFO
MAGNETISCHE PANEL INFORMATIONEN
WWW.HARINCK.BE

ENKEL VOOR ZICHTBAAR RAAMBESLAG
POUR LES FERRURES DE FENÊTRES VISIBLES UNIQUEMENT
FOR VISIBLE WINDOW HARDWARE ONLY
NUR FÜR SICHTBARE FENSTERBESCHLÄGE

169.8531.--		1
169.8532.--		1

SECTIONS Masterline 8-Fu Balcony Door 2024

BALCONY DOOR DOUBLE INWARD OPENING WITH PANEL (CONCEALED HARDWARE) - VARIANT

MASTERLINE 8-Fu

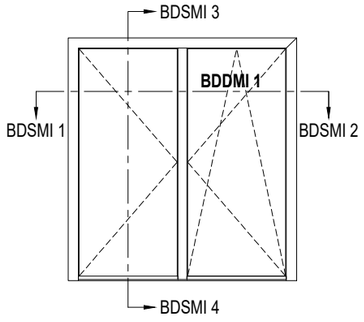

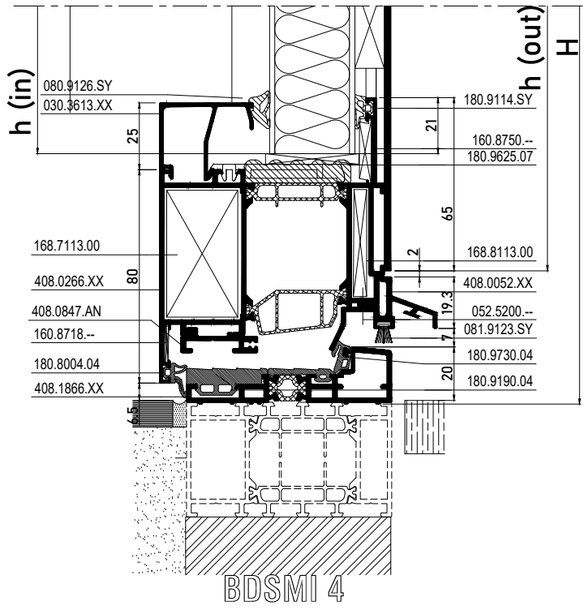

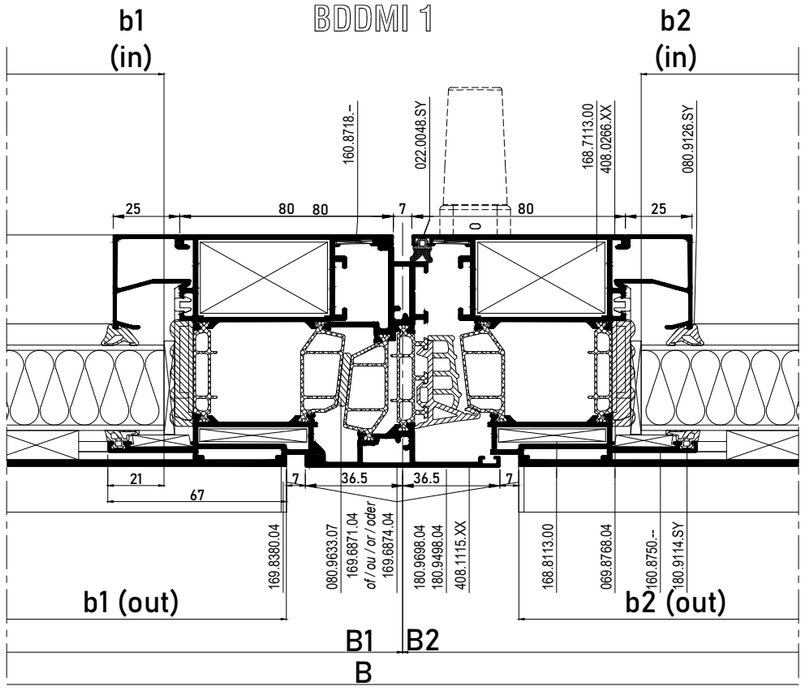

			#	Lm
408.0183.XX			1	B
			1	H
			1	H
408.0266.XX			2	B1 - 30.5
			2	B2 - 30.5
			4	H - 35
408.1115.XX			1	H - 102
030.3615.XX			2	B1 - 190.5
			2	B2 - 190.5
			4	H - 243
408.1866.XX			1	B - 66
408.0052.XX			1	B1 - 114.5
			1	B2 - 114.5
408.0894.XX			1	B
408.0847.AN			1	B1 - 114.5
			1	B2 - 114.5

			#	
408.0183.XX			1	B
			1	H - 12
			1	H - 12
408.1866.XX			1	B

		#
168.7002.00		2
168.8002.00		2
168.7113.00		8
168.8113.00		8
160.8750.--		10
160.8718.--		8
168.8712.00		2
168.8732.00		2
068.9937.--		2
069.8768.04		19H.F. ...
069.6831.XX		19H.F. ...
180.8004.04		B
022.0048.SY		B + (3xH)
180.9114.SY		(4xb)+(4xh)
180.9698.04		(1xB)+(3xH)
180.9498.04		2
180.9730.04		B
180.9190.04		B
180.9630.07		(4xB)+(4xH)
080.9125.SY		(4xb)+(4xh)
169.8380.04		1
169.7030.04		1
081.9123.SY		B
052.5200.--		B/300
169.8500.--		2
052.5327.--		2
052.5318.--		2
169.6871.04		1
169.8542.04		1
169.6874.04		1
169.8541.04		1

b1(in)=B1-202.5
b2(in)=B2-205.5
h (in) = H - 207

b1(out)=B1-110.5
b2(out)=B2-110.5
h(out)=H - 117

50mm ZIE BEGLAZINGSMETHODE
VOIR METHODE DE VITRAGE
SEE GLAZING METHOD
ZIE VERGLASUNGSWEISE

DIN R =

DIN L =

OPTIE / OPTION (*)

RAAMBESLAG > ZIE "OPENING WINDOWS"
ACCESSOIRES FENETRES > VOIRE "OPENING WINDOWS"
WINDOW GEAR > SEE "OPENING WINDOWS"
FENSTERBESCHLAG > SIEHE "OPENING WINDOWS"

RAAMDEURBESLAG > ZIE "OPENING DOORS"
ACCESSOIRES PORTES FENETRES > VOIRE "OPENING DOORS"
WINDOW-DOOR GEAR > SEE "OPENING DOORS"

MAGNETISCH PANEEL INFO
INFO PANNEAU MAGNÉTIQUE
MAGNETIC PANEL INFO
MAGNETISCHE PANEL INFORMATIONEN
WWW.HARINCK.BE

ENKEL VOOR ZICHTBAAR RAAMBESLAG
POUR LES FERRURES DE FENÊTRES VISIBLES UNIQUEMENT
FOR VISIBLE WINDOW HARDWARE ONLY
NUR FÜR SICHTBARE FENSTERBESCHLÄGE

169.8531.--		1
169.8532.--		1

SECTIONS Masterline 8-Fu Balcony Door 2024

BALCONY DOOR DOUBLE INWARD OPENING (CONCEALED HARDWARE) - VARIANT

MASTERLINE 8-Fu

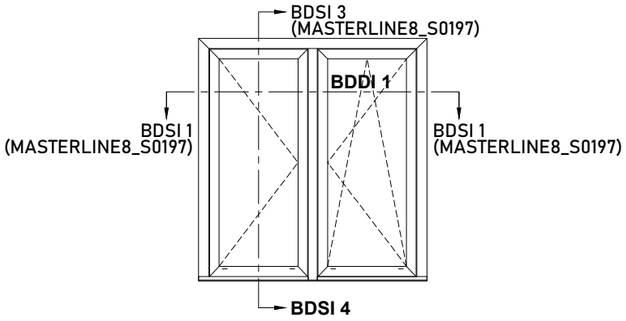

b1 = B1-206.5
b2 = B2-206.5
h = H - 211

50mm
ZIE BEGLAZINGSMETHODE
VOIR METHODE DE VITRAGE
SEE GLAZING METHOD
ZIE VERGLASUNGSWEISE

OPTIE / OPTION (*)

RAAMBESLAG > ZIE "OPENING WINDOWS"
ACCESSOIRES FENETRES > VOIRE "OPENING WINDOWS"
WINDOW GEAR > SEE "OPENING WINDOWS"
FENSTERBESCHLAG > SIEHE "OPENING WINDOWS"

RAAMDEURBESLAG > ZIE "OPENING DOORS"
ACCESSOIRES PORTES FENETRES > VOIRE "OPENING DOORS"
WINDOW-DOOR GEAR > SEE "OPENING DOORS"
ZUBEHOR FENSTERTUEREN > SIEHE "OPENING DOORS"

BDDI 1

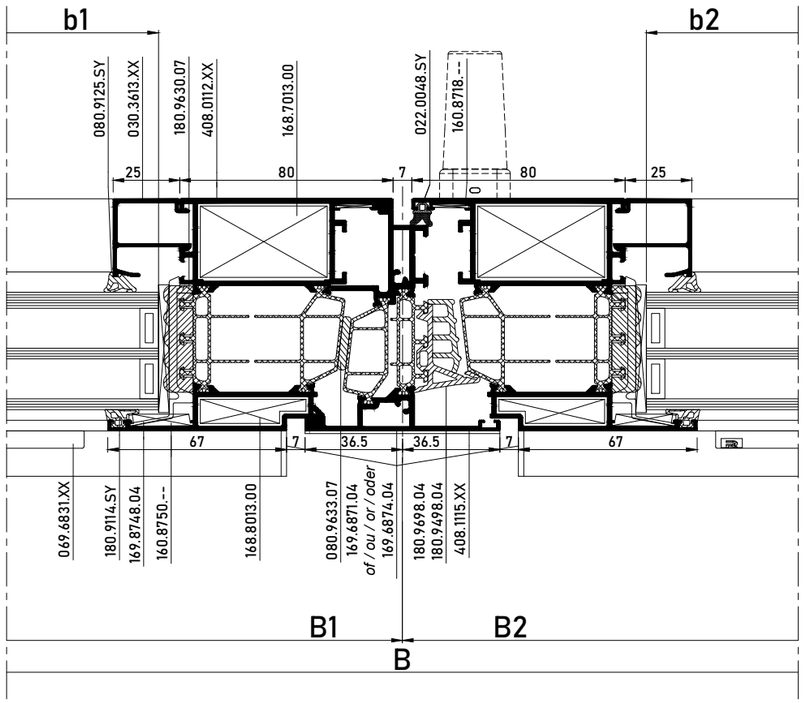

BDSI 4

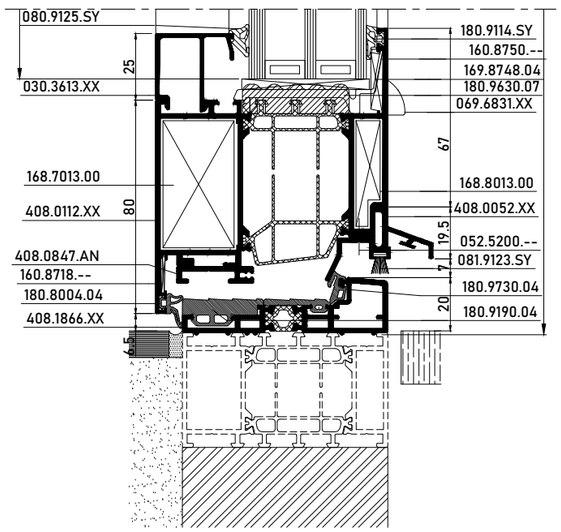

			#	Lm
408.0183.XX			1	B
			1	H
			1	H
408.0112.XX			2	B1 - 30.5
			2	B2 - 30.5
			4	H - 35
408.1115.XX			1	H - 102
030.3613.XX			2	B1 - 190.5
			2	B2 - 190.5
			4	H - 243
408.1866.XX			1	B - 66
408.0052.XX			1	B1 - 114.5
			1	B2 - 114.5
408.0894.XX			1	B
408.0847.AN			1	B1 - 114.5
			1	B2 - 114.5

408.0183.XX		1	B
		1	H - 7.3
		1	H - 7.3
408.0866.XX		1	B

052.5327.--		2
052.5318.--		2

ENKEL VOOR ZICHTBAAR RAAMBESLAG
POUR LES FERRURES DE FENÊTRES VISIBLES UNIQUEMENT
FOR VISIBLE WINDOW HARDWARE ONLY
NUR FÜR SICHTBARE FENSTERBESCHLÄGE

169.8531.--		1
169.8532.--		1

DIN R =

DIN L =

		#
168.7002.00		2
168.8002.00		2
168.7013.00		8
168.8013.00		8
160.8750.--		10
160.8718.--		8
168.8712.00		2
168.8732.00		2
068.9937.--		2
169.8748.04		19H.F. ...
069.6831.XX		19H.F. ...
180.8004.04		B
022.0048.SY		B + (3xH)
180.9114.SY		(4xb)+(4xh)
180.9698.04		(1xB)+(3xH)
180.9498.04		2
180.9730.04		B
180.9190.04		B
180.9630.07		(4xB)+(4xH)
080.9125.SY		(4xb)+(4xh)
169.8380.04		1
169.7030.04		1
081.9123.SY		B
052.5200.--		B/300
052.5327.--		B/380
169.8500.--		2
169.6871.04		1
169.8542.04		1
169.6874.04		1
169.8541.04		1

SECTIONS Masterline 8-Fu Balcony Door 2024

ADA-COMPLIANT DOOR

MASTERLINE 8-Fu

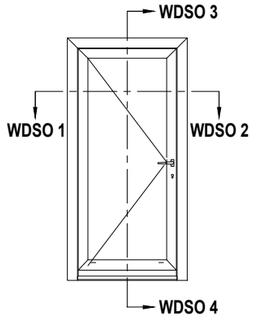

			#	Lm
408.0183.XX			1	B
			1	H
			1	H
4F8.1051.XX			2	B - 54
			2	H - 48.8
030.3613.XX			2	B - 236
			2	H - 281
408.0849.XX			1	B - 140
408.0771.XX			1	B - 120

B = B - 252
h = H - 247

ZIE BEGLAZINGSMETHODE
VOIR METHODE DE VITRAGE
SEE GLAZING METHOD
SIEHE VERGLASUNGSWEISE

		#
168.7002.00		2
168.8002.00		2
168.7013.00		4
168.8013.00		4
160.8750.--		6
160.8718.--		4
169.8748.04		19H.F. ...
069.6831.XX		19H.F. ...
022.0048.SY		B+(2xH)
180.9114.SY		(2xb) + (2xh)
180.9698.04		B + (2xH)
180.9498.04		2
180.9630.07		(2xB) + (2xH)
080.9125.SY		(2xb) + (2xh)
080.9240.04		B
180.9702.04		B
169.7500.SY		1
081.9236.04		1X24MM
081.9091.04		3X24MM
052.5311.--		3
169.7510.SY		1
081.9236.04		1X24MM
081.9091.04		3X24MM
052.5311.--		3
169.8374.SY		1
081.9055.-- *		19H.F. ...

* Afhankelijk van de vleugelbreedte
* En fonction de la largeur de l'ouvrant
* Depending on vent width
* Abhängig von der Flügelbreite

RAAMDEURBESLAG > ZIE "OPENING DOORS"
ACCESSOIRES PORTES FENETRES > VOIRE "OPENING DOORS"
WINDOW-DOOR GEAR > SEE "OPENING DOORS"
ZUBEHOR FENSTERTUEREN > SIEHE "OPENING DOORS"

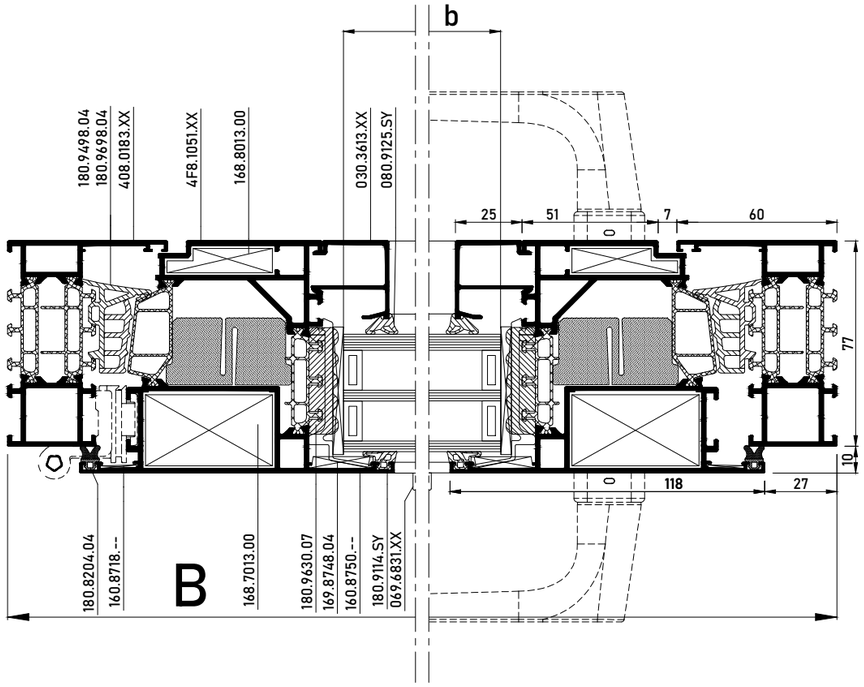

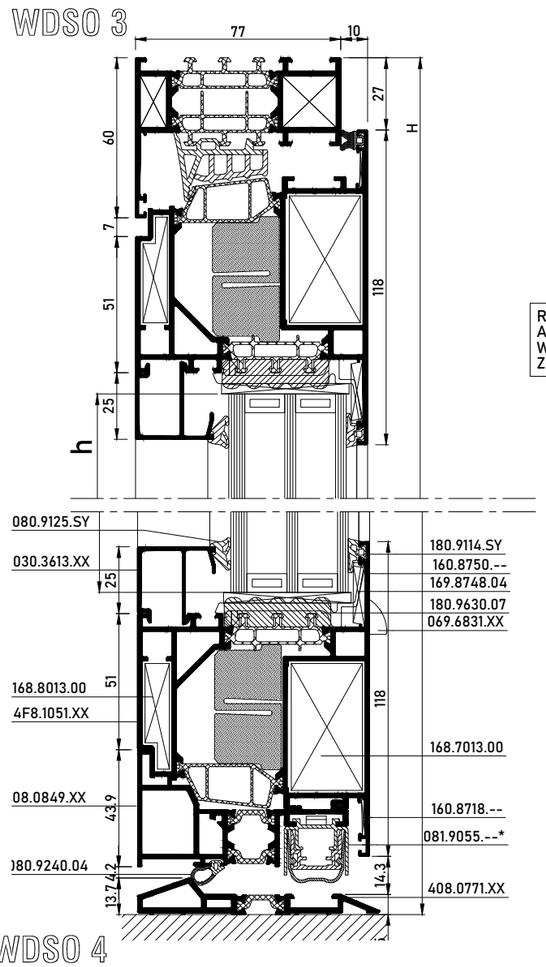

SECTIONS MASTERLINE 8-Re

TURN AND TILT WINDOW

MASTERLINE 8-Re

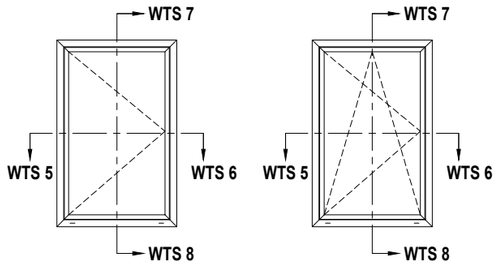

			#	Lm
408.0283.XX			2	B
			2	H
408.0292.XX			2	B - 54
			2	H - 54
030.3610.XX			2	B - 184
			2	H - 234

b = B - 200
h = H - 200

ZIE BEGLAZINGSMETHODE
VOIR METHODE DE VITRAGE
SEE GLAZING METHOD
ZIE VERGLASUNGSWEISE

		#
168.7002.00		8
168.7012.00		4
168.8012.00		4
160.8750.--		8
160.8718.--		4
169.8749.04		PROD STEPS
069.6831.XX		PROD STEPS
180.8204.04		(2xB)+(2xH)
of / ou / or / oder		
022.0048.SY		(2xB)+(2xH)
180.9114.SY		(2xb)+(2xh)
180.9698.04		(2xB)+(2xH)
180.9498.04		4
180.9630.07		(2xB)+(2xH)
080.9125.04		(2xb)+(2xh)
180.9040.04		4

RAAMBESLAG > ZIE "HARDWARE CONFIGURATOR"
ACCESSOIRES FENETRES > VOIRE "HARDWARE CONFIGURATOR"
WINDOW GEAR > SEE "HARDWARE CONFIGURATOR"
FENSTERBESCHLAG > SIEHE "HARDWARE CONFIGURATOR"

WTS 5

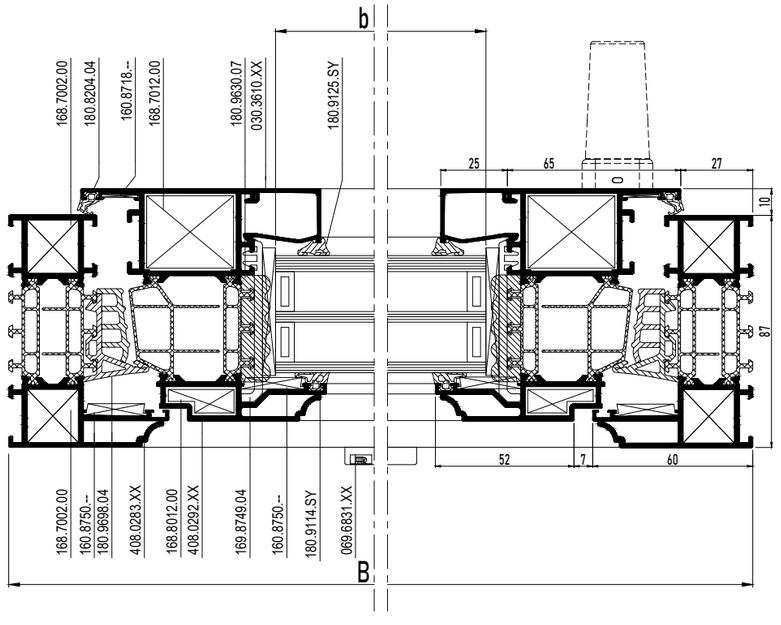

WTS 6

WTS 7

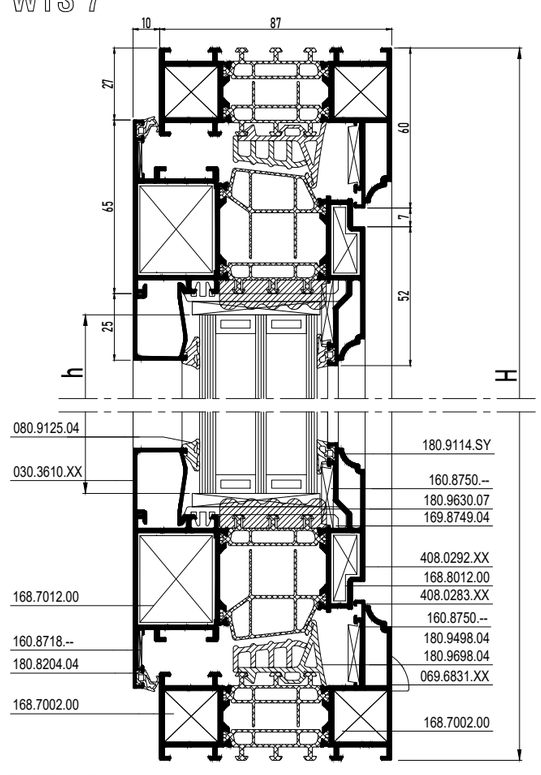

WTS 8

SECTIONS MASTERLINE 8-Re

TURN AND TILT WINDOW

MASTERLINE 8-Re

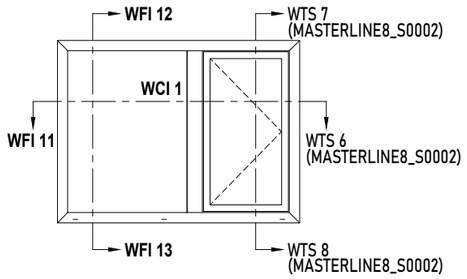

			#	Lm
408.0283.XX			2	B
			2	H
408.0292.XX			2	B2 - 37.5
			2	H - 54
408.0220.XX			1	H - 66
030.3610.XX			2	B1 - 49.5
			2	B2 - 167.5
			2	H - 116
			2	H - 234

b1 = B1 - 65.5
h1 = H - 82
b2 = B2 - 183.5
h2 = H - 200

ZIE BEGLAZINGSMETHODE
VOIR METHODE DE VITRAGE
SEE GLAZING METHOD
ZIE VERGLASUNGSWEISE
≥ 45mm

		#
168.7002.00		8
168.7012.00		4
168.8012.00		4
168.8712.00		2
168.5000.00		4
168.8688.04		4
160.8750.--		12
160.8718.--		4
169.8748.04		PROD STEPS
169.8749.04		PROD STEPS
069.6831.XX		PROD STEPS
180.8204.04		(2xB2)+(2xH)
of / ou / or / oder		
022.0048.SY		(2xB2)+(2xH)
180.9114.SY		(2xb1)+(2xh1)
		(2xb2)+(2xh2)
180.9698.04		(2xB2)+(2xH)
180.9498.04		4
180.9630.07		(2xB1)+(2xB2)
		+(4xH)
080.9125.04		(2xb1)+(2xh1)
		(2xb2)+(2xh2)
180.9040.04		4
168.8742.00 (*)		2
168.5012.-- (*)		2

RAAMBESLAG > ZIE "HARDWARE CONFIGURATOR"
ACCESSOIRES FENETRES > VOIRE "HARDWARE CONFIGURATOR"
WINDOW GEAR > SEE "HARDWARE CONFIGURATOR"
FENSTERBESCHLAG > SIEHE "HARDWARE CONFIGURATOR"

OPTIE / OPTION (*)

WFI 11

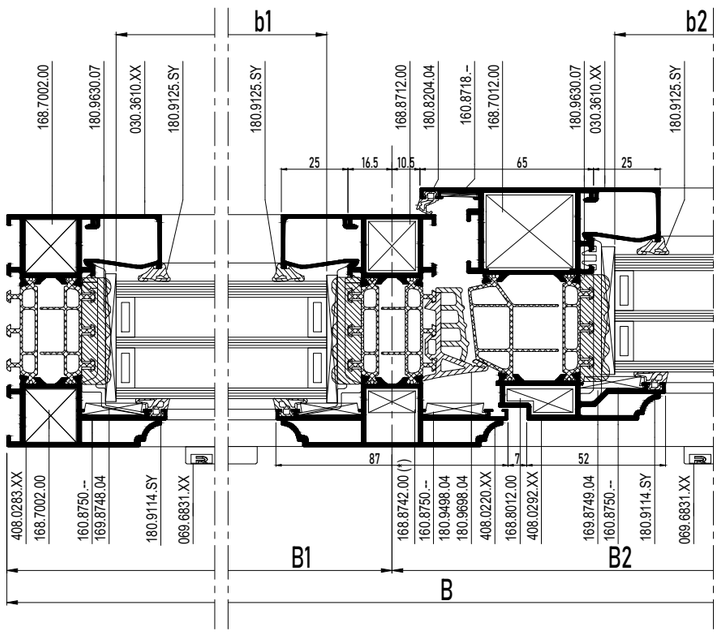

WCI 1

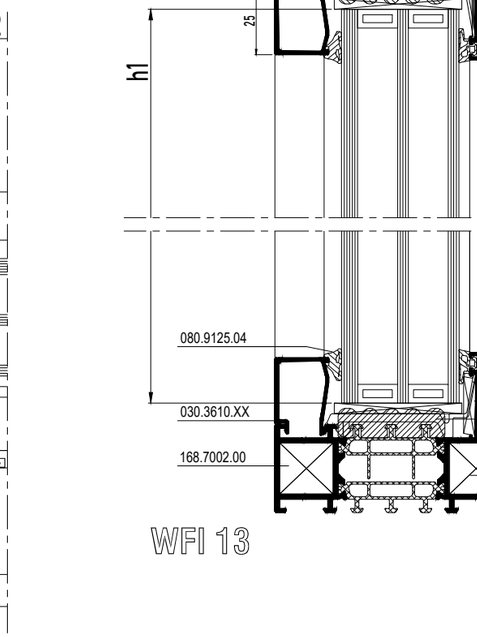

WFI 12

WFI 13

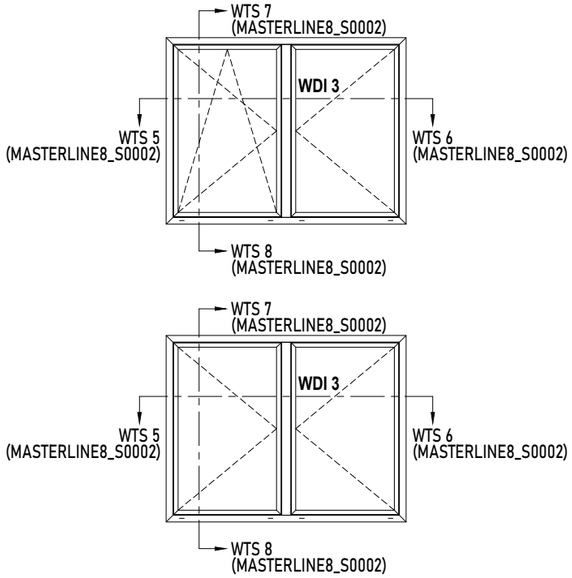

			#	Lm
408.0283.XX			2	B
			2	H
408.0292.XX			2	B1 - 30.5
			2	B2 - 30.5
			4	H - 54
408.1115.XX			1	H - 138
030.3610.XX			2	B1 - 160.5
			2	B2 - 160.5
			4	H - 234
408.0215.XX			1	H - 138

b1 = B1 - 176.5
b2 = B2 - 176.5
h = H - 200

≥ 50mm
ZIE BEGLAZINGSMETHODE
VOIR METHODE DE VITRAGE
SEE GLAZING METHOD
ZIE VERGLASUNGSWEISE

		#
168.7002.00		8
168.7012.00		8
168.8012.00		8
160.8750.--		12
160.8718.--		8
169.6897.SY		1
052.5318.--		2
052.5327.--		2
052.5318.--		H/300 mm
052.5329.--		H/300 mm
169.8748.04		19H.F....
069.6831.XX		19H.F....
180.9698.04		(2xB)+ (3xH)
180.9498.04		6
180.9630.07		(2xB1)+(2xB2)
		+(4xH)
080.9125.04		(2xb1)+(2xh)
		(2xb2)+(2xh)
180.8204.04 of / ou / or / oder 022.0048.SY		(2xB)+(3xH)
180.9114.SY		(2xb1)+(2xh)
		(2xb2)+(2xh)
080.9633.07		1xH
180.9040.04		8
050.5040.--		H/300 mm
080.9381.04		2xH
169.6215.04		2

RAAMBESLAG > ZIE "OPENING WINDOWS"
ACCESSOIRES FENETRES > VOIRE "OPENING WINDOWS"
WINDOW GEAR > SEE "OPENING WINDOWS"
FENSTERBESCHLAG > SIEHE "OPENING WINDOWS"

WDI 3

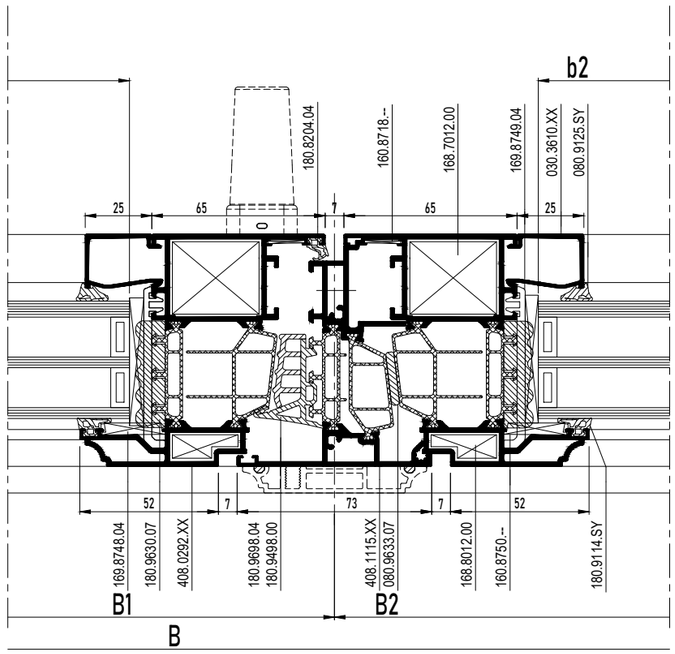

SECTIONS MASTERLINE 8-Re

WINDOW-DOOR INWARD OPENING

MASTERLINE 8-Re

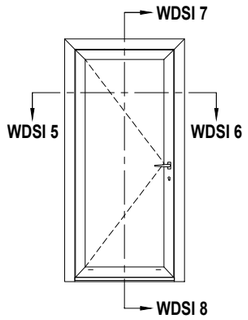

			#	Lm
408.0283.XX			1	B
			1	H
			1	H
408.0212.XX			2	B - 54
			2	H - 35
030.3609.XX			2	B - 214
			2	H - 245
408.0049.XX			1	B - 140

* Afhankelijk van de vleugelbreedte
* En fonction de la largeur de l'ouvrant
* Depending on vent width
* Abhängig von der Flügelbreite

b = B - 230
h = H - 211

ZIE BEGLAZINGSMETHODE
VOIR METHODE DE VITRAGE
SEE GLAZING METHOD
ZIE VERGLASUNGSWEISE

		#
168.7002.00		4
168.7013.00		4
168.8013.00		4
160.8750.--		6
160.8718.--		4
169.8749.04		PROD STEPS
069.6831.XX		PROD STEPS
180.8204.04		B+(2XH)
of / ou / or / oder		
022.0048.SY		B+(2XH)
180.9114.SY		(2xb) + (2xh)
180.9698.04		B + (2xH)
180.9498.04		2
180.9630.07		(2xB) + (2xH)
080.9126.SY		(2xb) + (2xh)
169.7300.SY		1
081.9091.04		4x75mm
052.5311.--		4
169.7400.SY		1
081.9091.04		4x75mm
052.5311.--		4
081.9142.04		19H.F. ...
081.9055.-- *		19H.F. ...
180.9040.04		4

RAAMDEURBESLAG > ZIE HARDWARE CONFIGURATION
ACCESSOIRES PORTES FENETRES > VOIRE HARDWARE CONFIGURATION
WINDOW-DOOR GEAR > SEE HARDWARE CONFIGURATION
ZUBEHOR FENSTERTUEREN > SIEHE HARDWARE CONFIGURATION

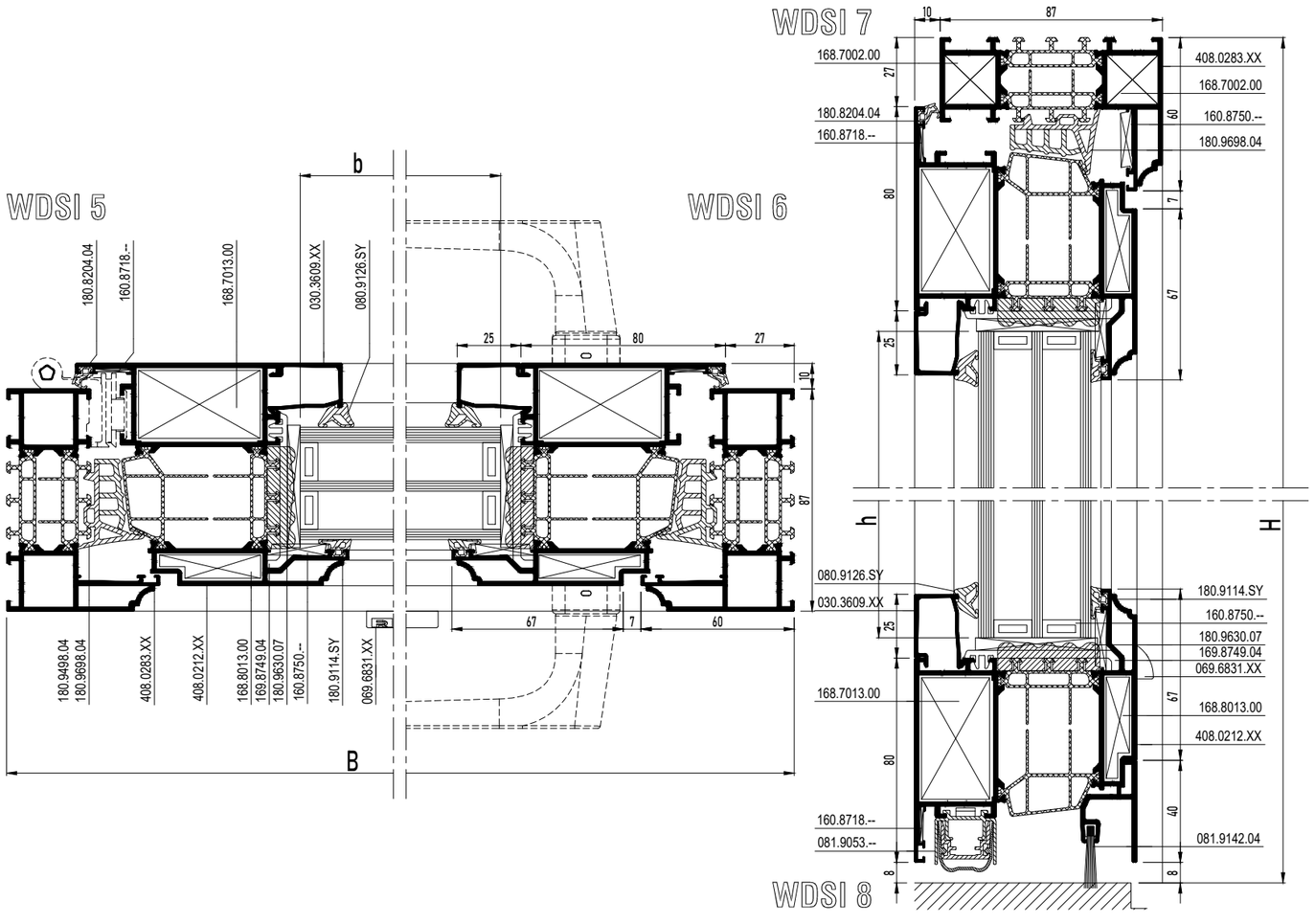

SECTIONS MASTERLINE 8-Re

WINDOW-DOOR DOUBLE INWARD OPENING

MASTERLINE 8-Re

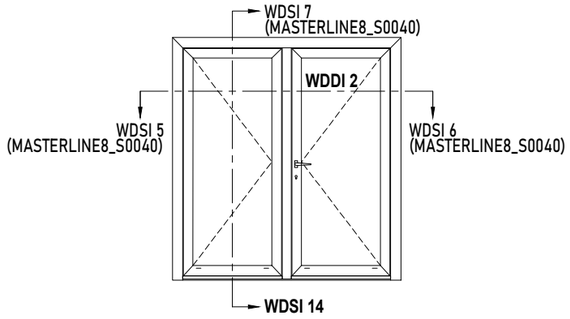

			#	Lm
408.0283.XX			1	B
			1	H
			1	H
408.0212.XX			2	B1 - 30.5
			2	B2 - 30.5
			4	H - 35
408.1115.XX			1	H - 77
030.3609.XX			2	B1 - 190.5
			2	B2 - 190.5
			4	H - 245
408.0049.XX			1	B1 - 113.5
			1	B2 - 116.5
408.0215.XX			1	H - 138

b1 = B1 - 206.5
b2 = B2 - 206.5
h = H - 211

≥ 50mm
ZIE BEGLAZINGSMETHODE
VOIR METHODE DE VITRAGE
SEE GLAZING METHOD
ZIE VERGLASUNGSWEISE

	DIN L	DIN R
169.7300.04	1	2
169.7400.04	2	1

** Plaatsing Eindstukken
** Finition Pieces Finales
** Sealing End Pieces
** Montage Endkappen

RAAMDEURBESLAG > ZIE "OPENING DOORS"
ACCESSOIRES PORTES FENETRES > VOIRE "OPENING DOORS"
WINDOW-DOOR GEAR > SEE "OPENING DOORS"
ZUBEHOR FENSTERTUEREN > SIEHE "OPENING DOORS"

		#
168.7002.00		4
168.7013.00		8
168.8013.00		8
160.8750.--		10
160.8718.--		8
169.8748.04		19H.F. ...
069.6831.XX		19H.F. ...
169.6897.SY		1
052.5318.--		1
052.5327.--		1
180.8204.04 of / ou / or / oder 022.0048.SY		B+(3XH)
		B+(3XH)
180.9114.SY		(2xb1) + (2xb2)
		+ (4xh)
180.9698.04		(2xB) + (3xH)
180.9498.04		2
180.9630.07		2 x B1
		2 x B2
		4 x H
080.9126.SY		(2xb1) + (2xb2)
		+ (4xh)
169.7300.SY**		1
081.9091.04		4x75mm
052.5311.--		4
169.7400.SY**		2
081.9091.04		8x75mm
052.5311.--		8
081.9142.04		19H.F. ...
080.9633.07		H
180.9040.04		8
050.5040.--		1/300MM
169.6215.04		2
080.9381.04		2XH

USING ESPAGNOLET

168.7013.00		6
168.7650.00		2

WDDI 2

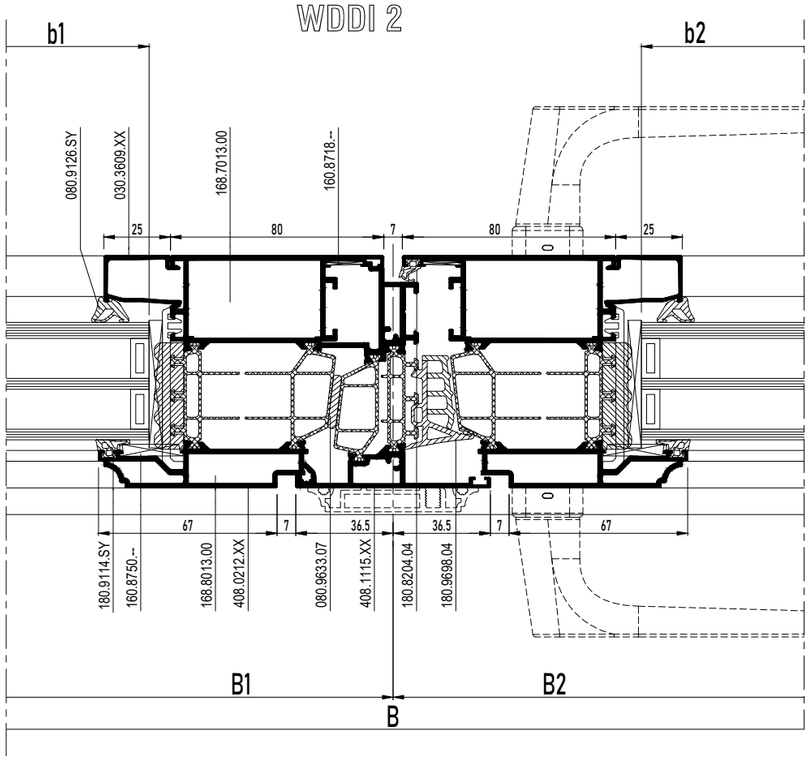

WDSI 14

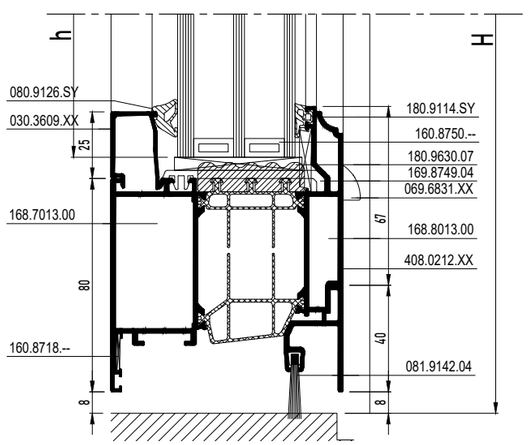

SECTIONS MASTERLINE 8-Re

WINDOW-DOOR OUTWARD OPENING

MASTERLINE 8-Re

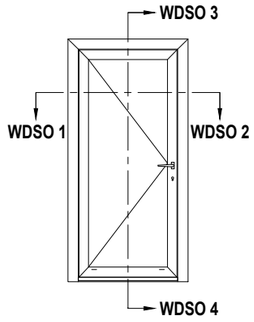

			#	Lm
408.0283.XX			1	B
			1	H
			1	H
4F8.1251.XX			2	B - 54
			2	H - 35
030.3609.XX			2	B - 236
			2	H - 267
408.0049.XX			1	B - 140

B = B - 252
h = H - 233

ZIE BEGLAZINGSMETHODE
VOIR METHODE DE VITRAGE
SEE GLAZING METHOD
ZIE VERGLASUNGSWEISE

		#
168.7002.00		4
168.7013.00		4
168.8013.00		4
160.8750.--		6
160.8718.--		4
169.8749.04		PROD STEPS
069.6831.XX		PROD STEPS
180.8204.04		B+(2XH)
of / ou / or / oder		
022.0048.SY		B+(2XH)
180.9114.SY		(2xb) + (2xh)
180.9698.04		B + (2xH)
180.9498.04		2
180.9630.07		(2xB) + (2xH)
080.9126.SY		(2xb) + (2xh)
169.7300.SY		1
081.9091.04		4x75mm
052.5311.--		4
169.7400.SY		1
081.9091.04		4x75mm
052.5311.--		4
081.9142.04		PROD STEPS
081.9055.-- *		PROD STEPS
180.9040.04		4

* Afhankelijk van de vleugelbreedte
* En fonction de la largeur de l'ouvrant
* Depending on vent width
* Abhängig von der Flügelbreite

RAAMDEURBESLAG > ZIE HARDWARE CONFIGURATOR
ACCESSOIRES PORTES FENETRES > VOIRE HARDWARE CONFIGURATOR
WINDOW-DOOR GEAR > SEE HARDWARE CONFIGURATOR
ZUBEHOR FENSTERTUEREN > SIEHE HARDWARE CONFIGURATOR

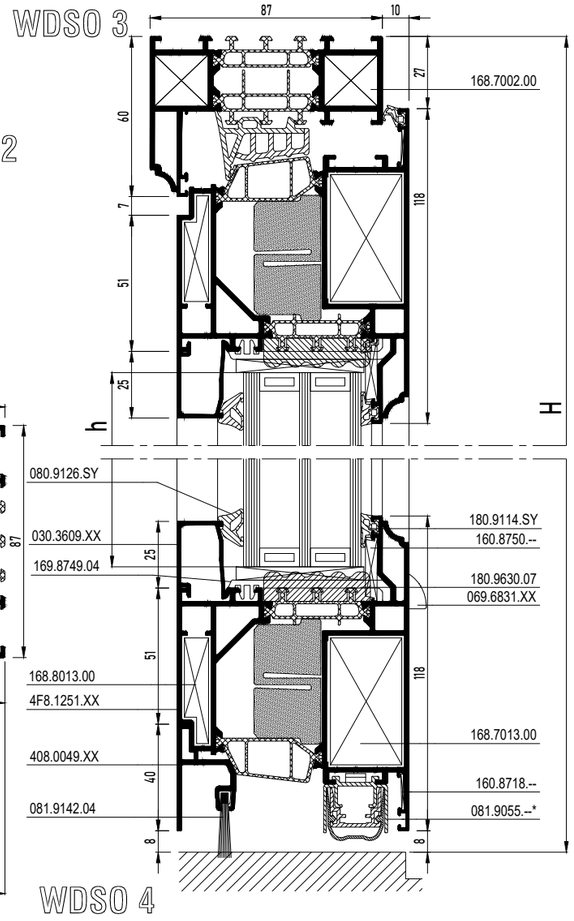

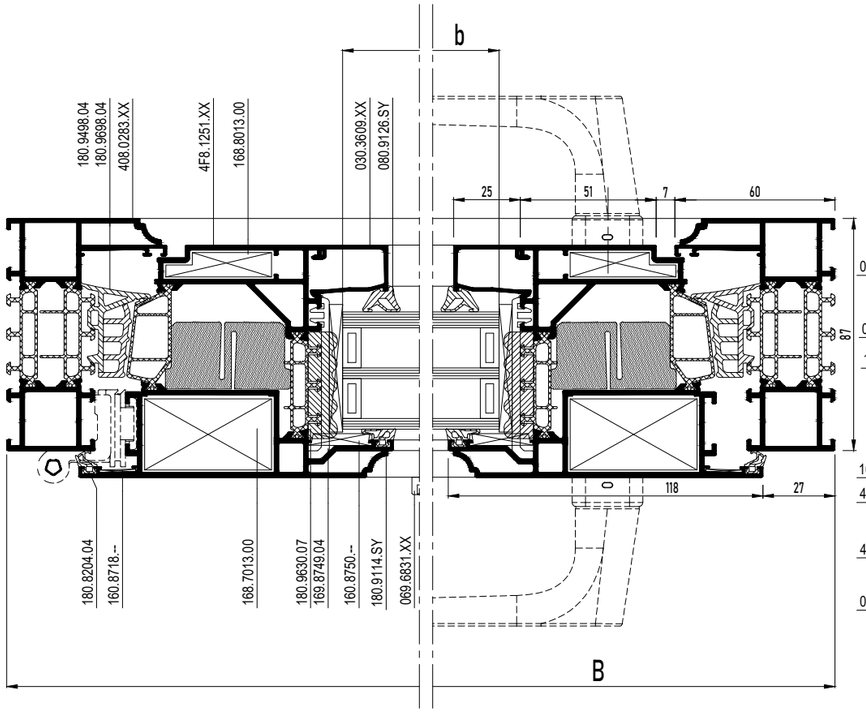

SECTIONS MASTERLINE 8-Re

WINDOW-DOOR DOUBLE OUTWARD OPENING

MASTERLINE 8-Re

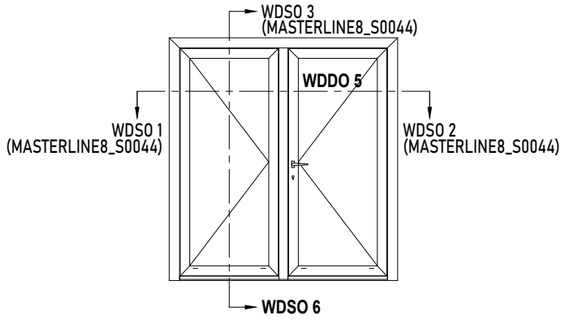

			#	Lm
408.0283.XX			1	B
			1	H
			1	H
4F8.1251.XX			2	B1 - 30.5
			2	B2 - 30.5
			4	H - 35
408.1115.XX			1	H - 77
030.3609.XX			2	B1 - 212.5
			2	B2 - 212.5
			4	H - 267
408.0049.XX			1	B1 - 113.5
			1	B2 - 116.5

b1 = B1 - 228.5
b2 = B2 - 228.5
h = H - 233

50mm
ZIE BEGLAZINGSMETHODE
VOIR METHODE DE VITRAGE
SEE GLAZING METHOD
ZIE VERGLASUNGSWEISE

	DIN L	DIN R
169.7300.04	1	2
169.7400.04	2	1

** Plaatsing Eindstukken
** Finition Pieces Finales
** Sealing End Pieces
** Montage Endkappen

RAAMDEURBESLAG > ZIE "OPENING DOORS"
ACCESSOIRES PORTES FENETRES > VOIRE "OPENING DOORS"
WINDOW-DOOR GEAR > SEE "OPENING DOORS"
ZUBEHOR FENSTERTUEREN > SIEHE "OPENING DOORS"

		#
168.7002.00		4
168.7013.00		8
168.8013.00		8
160.8750.--		10
160.8718.--		8
169.8749.04		19H.F. ...
069.6831.XX		19H.F. ...
169.6897.SY		1
052.5327.--		1
052.5318.--		1
080.9126.SY		(2xb1) + (2xb2)
		+ (4xh)
180.8204.04		B+(3XH)
of / ou / or / oder		
022.0048.SY		B+(3XH)
180.9114.SY		(2xb1) + (2xb2)
		+ (4xh)
180.9630.07		2 x B1
		2 x B2
		4 x H
180.9698.04		b1 + b2 + (3xh)
180.9498.04		2
169.7300.SY**		2
081.9091.04		8x75mm
052.5311.--		8
169.7400.SY**		1
081.9091.04		4x75mm
052.5311.--		4
081.9142.04		19H.F. ...
080.9633.07		H
180.9040.04		4

USING ESPAGNOLET

168.7013.00		6
168.7650.00		2

WDDO 5

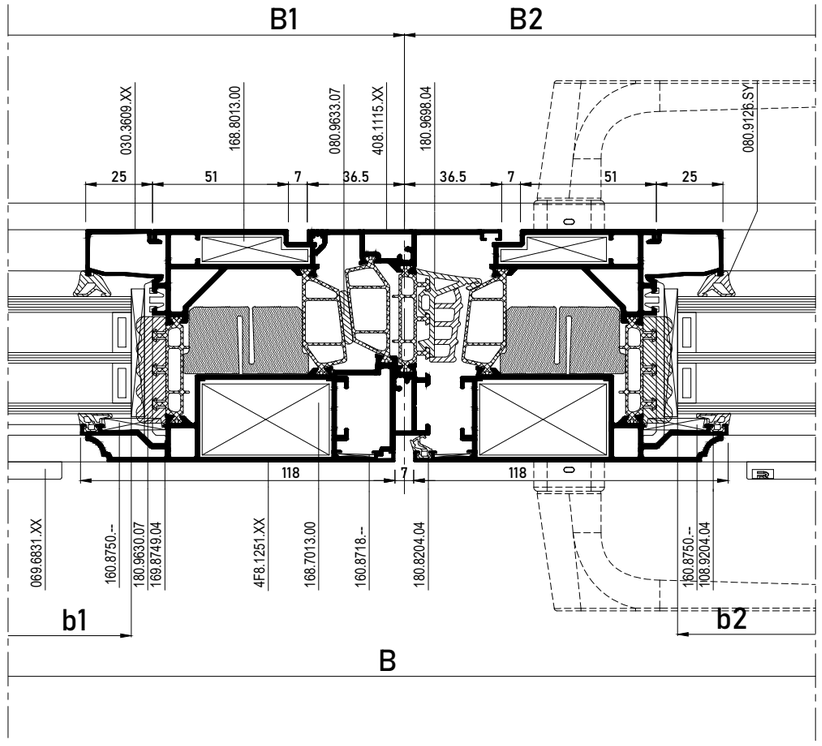

WDSO 6

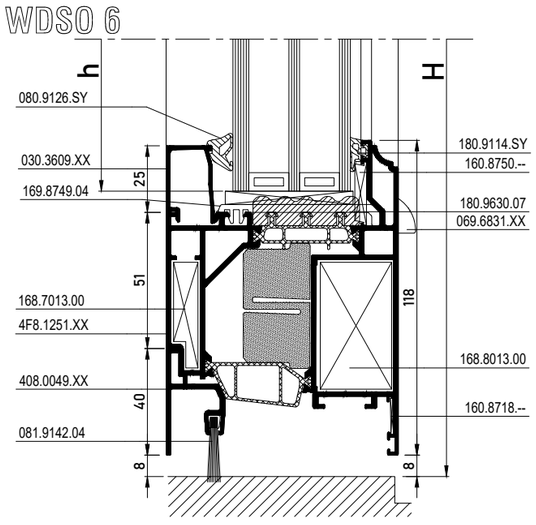

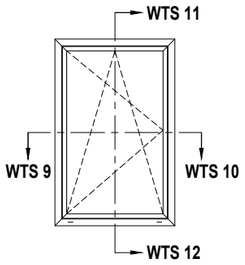

WTS 11

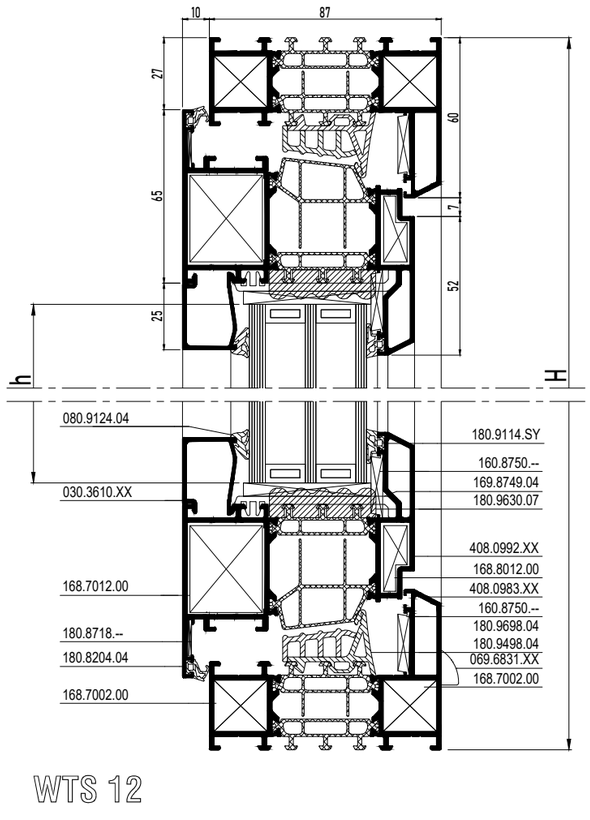

WTS 12

			#	Lm
408.0983.XX			2	B
			2	H
408.0992.XX			2	B - 54
			2	H - 54
030.3610.XX			2	B - 184
			2	H - 234

b = B - 200
h = H - 200

ZIE BEGLAZINGSMETHODE
VOIR METHODE DE VITRAGE
SEE GLAZING METHOD
ZIE VERGLASUNGSWEISE

≥ 45mm

		#
168.7002.00		8
168.7012.00		4
168.8012.00		4
160.8750.--		8
160.8718.--		4
169.8749.04		19H.F. ...
069.6831.XX		19H.F. ...
180.8204.04 of / ou / or / oder 022.0048.SY		(2xB)+(2xH)
180.9114.SY		(2xb)+(2xh)
180.9698.04		(2xB)+(2xH)
180.9498.04		4
180.9630.07		(2xB)+(2xH)
080.9125.04		(2xb)+(2xh)
180.9040.04		4

RAAMBESLAG > ZIE "HARDWARE CONFIGURATOR"
ACCESSOIRES FENETRES > VOIRE "HARDWARE CONFIGURATOR"
WINDOW GEAR > SEE "HARDWARE CONFIGURATOR"
FENSTERBESCHLAG > SIEHE "HARDWARE CONFIGURATOR"

WTS 9

WTS 10

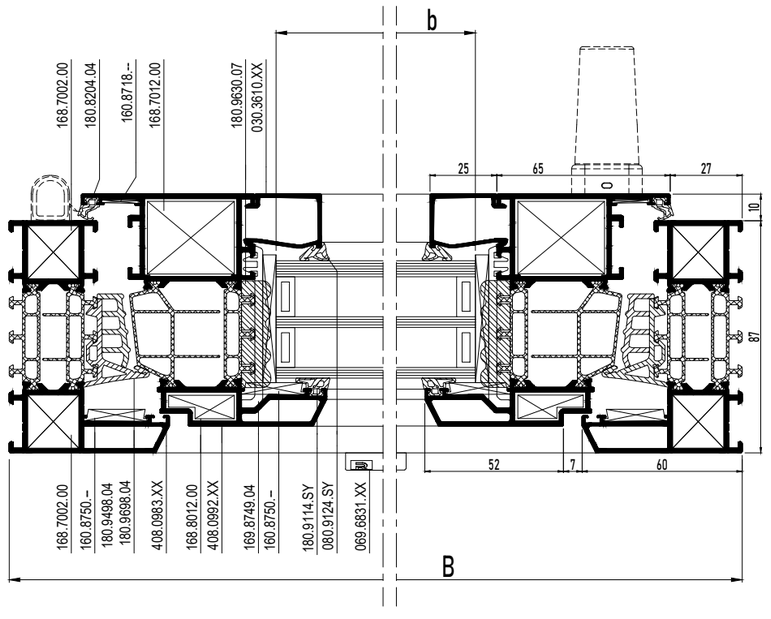

SECTIONS MASTERLINE 8-De

COMBINED WINDOW INWARD OPENING

MASTERLINE 8-De

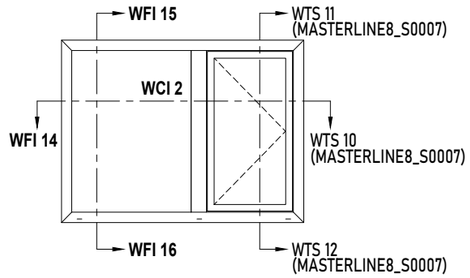

			#	Lm
408.0983.XX			2	B
			2	H
408.0992.XX			2	B2 - 37.5
			2	H - 54
408.0920.XX			1	H - 66
030.3610.XX			2	B1 - 49.5
			2	B2 - 167.5
			2	H - 116
			2	H - 234

b1 = B1 - 65.5
h1 = H - 82
b2 = B2 - 183.5
h2 = H - 200

≥45mm
ZIE BEGLAZINGSMETHODE
VOIR METHODE DE VITRAGE
SEE GLAZING METHOD
ZIE VERGLASUNGSWEISE

		#
168.7002.00		8
168.7012.00		4
168.8012.00		4
168.8712.00		2
168.5000.00		4
168.8688.04		4
160.8750.--		12
160.8718.--		4
169.8748.04		PROD STEPS
169.8749.04		PROD STEPS
069.6831.XX		PROD STEPS
180.8204.04		(2xB2)+(2xH)
of / ou / or / oder		
022.0048.SY		(2xB2)+(2xH)
180.9114.SY		(2xb1)+(2xh1)
		(2xb2)+(2xh2)
180.9698.04		(2xB2)+(2xH)
180.9498.04		4
180.9630.07		(2xB1)+(2xB2)
		+(4xH)
080.9125.04		(2xb1)+(2xh1)
		(2xb2)+(2xh2)
180.9040.04		4
168.8742.00 (*)		2
168.5012.-- (*)		2

RAAMBESLAG > ZIE "HARDWARE CONFIGURATOR"
ACCESSOIRES FENETRES > VOIRE "HARDWARE CONFIGURATOR"
WINDOW GEAR > SEE "HARDWARE CONFIGURATOR"
FENSTERBESCHLAG > SIEHE "HARDWARE CONFIGURATOR"

OPTIE / OPTION (*)

WFI 15

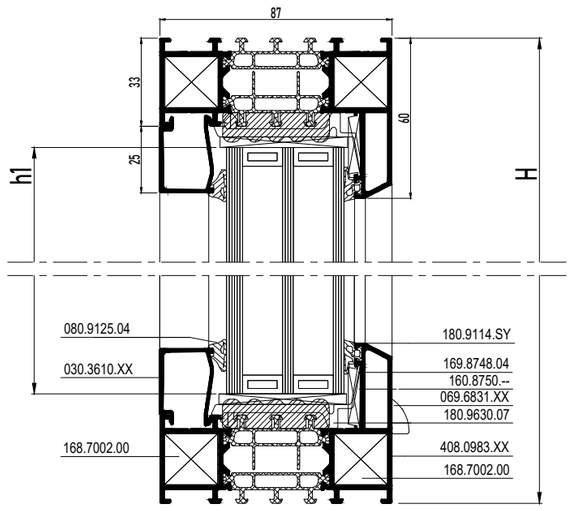

WFI 14

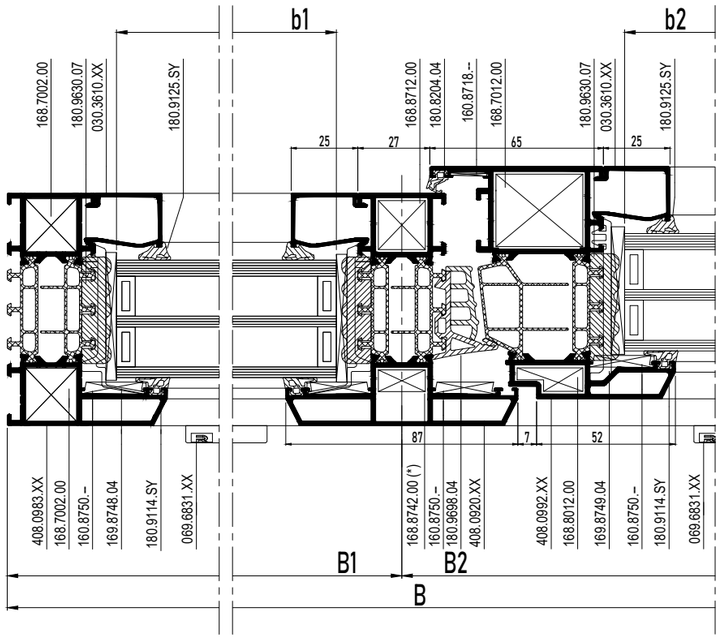

WCI 2

WFI 16

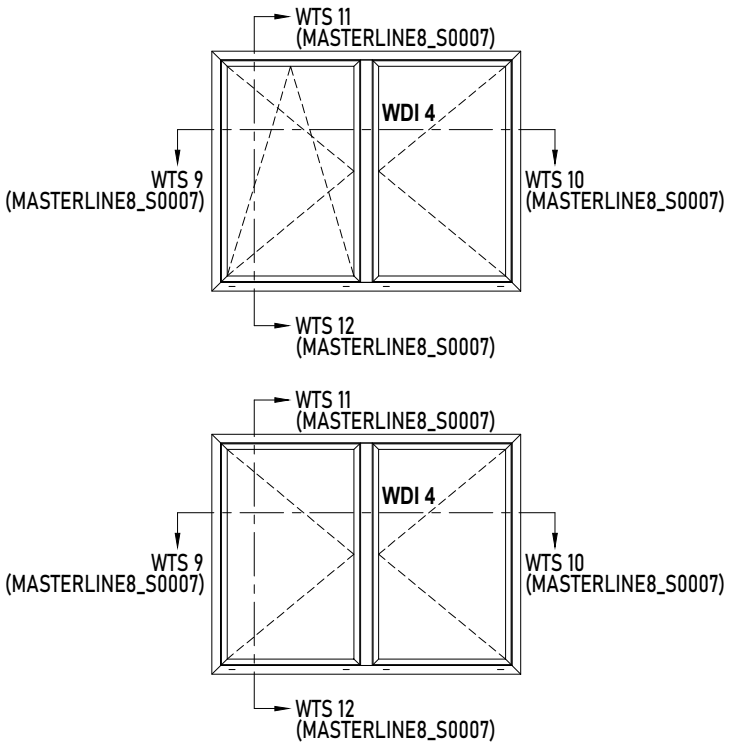

			#	Lm
408.0983.XX			2	B
			2	H
408.0992.XX			2	B - 30.5
			4	H - 54
408.1115.XX			1	H - 138
030.3610.XX			2	B1 - 160.5
			2	B2 - 160.5
			4	H - 234
408.0915.XX			1	H - 138

		#
168.7002.00		8
168.7012.00		8
168.8012.00		8
160.8750.--		12
160.8718.--		8
169.6897.SY		1
052.5318.--		2
052.5327.--		2
052.5318.--		H/300 mm
052.5329.--		H/300 mm
169.8749.04		19H.F....
069.6831.XX		19H.F....
180.9698.04		(2xB)+ (3xH)
180.9498.04		6
180.9630.07		(2xB1)+(2xB2)
		+(4xH)
080.9125.SY		(2xb1)+(2xh)
		(2xb2)+(2xh)
180.8204.04		(2xB)+(3xH)
of / ou / or / oder		
022.0048.SY		(2xB)+(3xH)
180.9114.SY		(2xb1)+(2xh)
		(2xb2)+(2xh)
080.9633.07		1xH
180.9040.04		8
050.5040.--		H/300 mm
080.9381.04		2xH
169.6915.04		2

b1 = B1 - 176.5
b2 = B2 - 176.5
h = H - 200

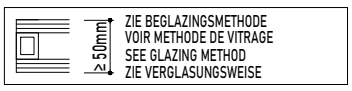

RAAMBESLAG > ZIE "OPENING WINDOWS"
ACCESSOIRES FENETRES > VOIRE "OPENING WINDOWS"
WINDOW GEAR > SEE "OPENING WINDOWS"
FENSTERBESCHLAG > SIEHE "OPENING WINDOWS"

WDI 4

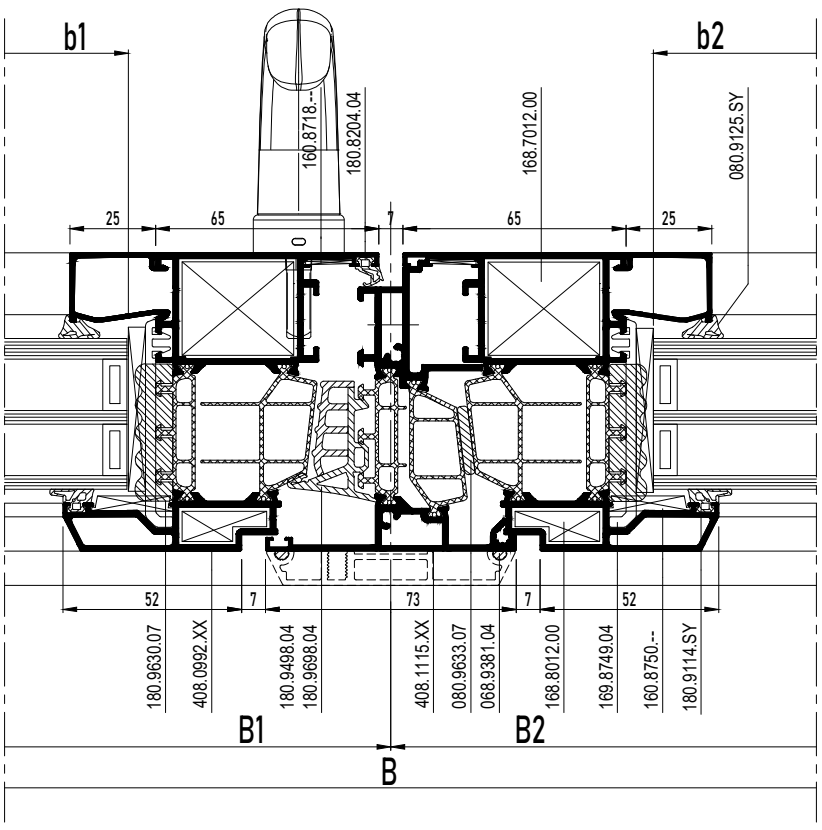

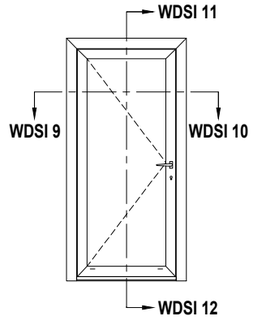

			#	Lm
408.0983.XX			1	B
			1	H
			1	H
408.0912.XX			2	B - 54
			2	H - 35
030.3609.XX			2	B - 214
			2	H - 245
408.0049.XX			1	B - 140

* Afhankelijk van de vleugelbreedte
* En fonction de la largeur de l'ouvrant
* Depending on vent width
* Abhängig von der Flügelbreite

b = B - 230
h = H - 211

ZIE BEGLAZINGSMETHODE
VOIR METHODE DE VITRAGE
SEE GLAZING METHOD
ZIE VERGLASUNGSWEISE

		#
168.7002.00		4
168.7013.00		4
168.8013.00		4
160.8750.--		6
160.8718.--		4
169.8749.04		PROD STEPS
069.6831.XX		PROD STEPS
180.8204.04		B+(2XH)
of / ou / or / oder		
022.0048.SY		B+(2XH)
180.9114.SY		(2xb) + (2xh)
180.9698.04		(2xB) + (2xH)
180.9498.04		2
180.9630.07		(2xB) + (2xH)
080.9126.SY		(2xb) + (2xh)
169.7300.SY		1
081.9091.04		4x75mm
052.5311.--		4
169.7400.SY		1
081.9091.04		4x75mm
052.5311.--		4
081.9142.04		PROD STEPS
081.9055.-- *		PROD STEPS
180.9040.04		4

RAAMDEURBESLAG > ZIE "HARDWARE CONFIGURATOR"
ACCESSOIRES PORTES FENETRES > VOIRE "HARDWARE CONFIGURATOR
WINDOW-DOOR GEAR > SEE "HARDWARE CONFIGURATOR"
ZUBEHOR FENSTERTUEREN > SIEHE "HARDWARE CONFIGURATOR"

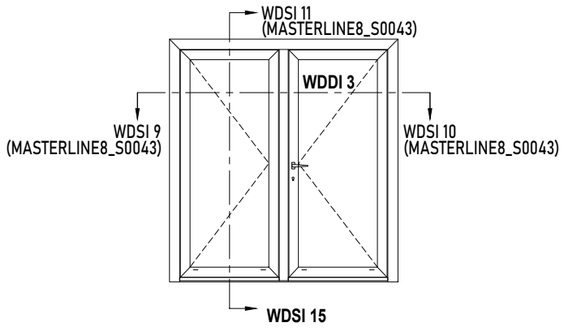

			#	Lm
408.0983.XX			1	B
			1	H
			1	H
408.0912.XX			2	B1 - 30.5
			2	B2 - 30.5
			4	H - 35
408.1115.XX			1	H - 77
030.3609.XX			2	B1 - 190.5
			2	B2 - 190.5
			4	H - 245
408.0049.XX			1	B1 - 113.5
			1	B2 - 116.5
408.0915.XX			1	H - 138

b1 = B1 - 206.5	
b2 = B2 - 206.5	
h = H - 211	



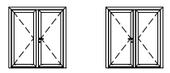

	DIN L	DIN R
169.7300.04	1	2
169.7400.04	2	1

** Plaatsing Eindstukken
** Finition Pieces Finales

** Sealing End Pieces
** Montage Endkappen

		#
168.7002.00		4
168.7013.00		8
168.8013.00		8
160.8750.--		10
160.8718.--		8
169.8748.04		19H.F. ...
069.6831.XX		19H.F. ...
169.6897.SY		1
052.5318.--		1
052.5327.--		1
180.8204.04		B+(3XH)
of / ou / or / oder		
022.0048.SY		B+(3XH)
180.9114.SY		(2xb1) + (2xb2)
		+ (4xh)
180.9698.04		(2xB) + (3xH)
180.9498.04		2
180.9630.07		2 x B1
		2 x B2
		4 x H
080.9126.SY		(2xb1) + (2xb2)
		+ (4xh)
169.7300.SY**		1
081.9091.04		4x75mm
052.5311.--		4
169.7400.SY**		2
081.9091.04		8x75mm
052.5311.--		8
081.9142.04		19H.F. ...
080.9633.07		H
180.9040.04		8
050.5040.--		1/300MM
169.6915.04		2
080.9381.04		2XH

USING ESPAGNOLET

168.7013.00		6
168.7650.00		2

RAAMDEURBESLAG > ZIE "OPENING DOORS"
ACCESSOIRES PORTES FENETRES > VOIRE "OPENING DOORS"
WINDOW-DOOR GEAR > SEE "OPENING DOORS"
ZUBEHOR FENSTERTUEREN > SIEHE "OPENING DOORS"

WDDI 3

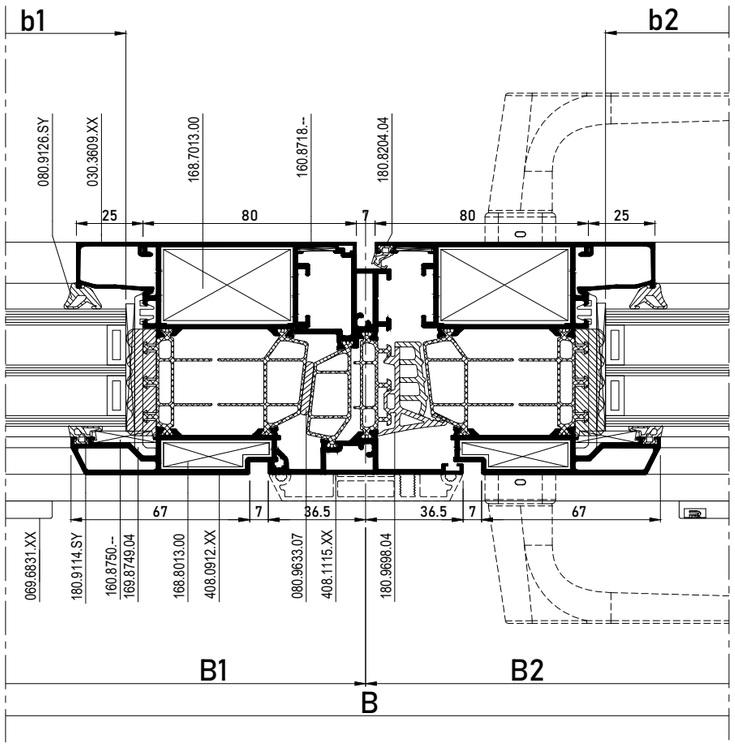

WDSI 15

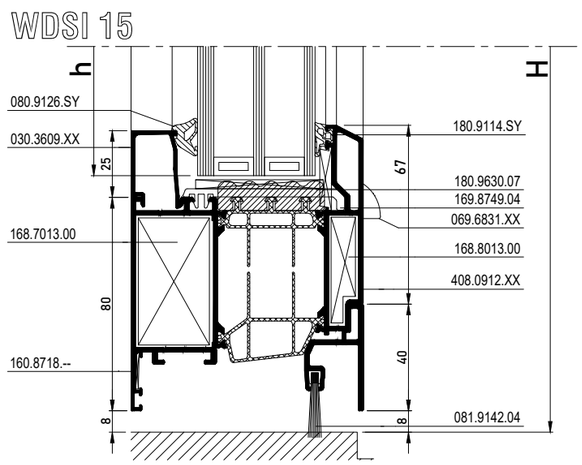

SECTIONS MASTERLINE 8-De

WINDOW-DOOR OUTWARD OPENING

MASTERLINE 8-De

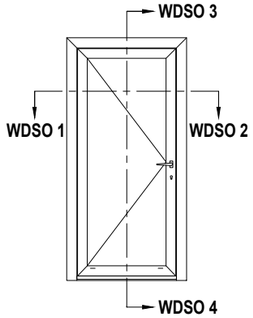

			#	Lm
408.0983.XX			1	B
			1	H
			1	H
4F8.1951.XX			2	B - 54
			2	H - 35
030.3609.XX			2	B - 236
			2	H - 267
408.0049.XX			1	B - 140

B = B - 252
h = H - 233

ZIE BEGLAZINGSMETHODE
VOIR METHODE DE VITRAGE
SEE GLAZING METHOD
ZIE VERGLASUNGSWEISE

		#
168.7002.00		4
168.7013.00		4
168.8013.00		4
160.8750.--		6
160.8718.--		4
169.8749.04		PROD STEPS
069.6831.XX		PROD STEPS
180.8204.04		B+(2XH)
of / ou / or / oder		
022.0048.SY		B+(2XH)
180.9114.SY		(2xb) + (2xh)
180.9698.04		B + (2xH)
180.9498.04		2
180.9630.07		(2xB) + (2xH)
080.9126.SY		(2xb) + (2xh)
169.7300.SY		1
081.9091.04		4x75mm
052.5311.--		4
169.7400.SY		1
081.9091.04		4x75mm
052.5311.--		4
081.9142.04		PROD STEPS
081.9055.-- *		PROD STEPS
180.9040.04		4

* Afhankelijk van de vleugelbreedte
* En fonction de la largeur de l'ouvrant
* Depending on vent width
* Abhängig von der Flügelbreite

RAAMDEURBESLAG > ZIE "HARDWARE CONFIGURATOR"
ACCESSOIRES PORTES FENETRES > VOIRE "HARDWARE CONFIGURATOR
WINDOW-DOOR GEAR > SEE "HARDWARE CONFIGURATOR"
ZUBEHOR FENSTERTUEREN > SIEHE "HARDWARE CONFIGURATOR"

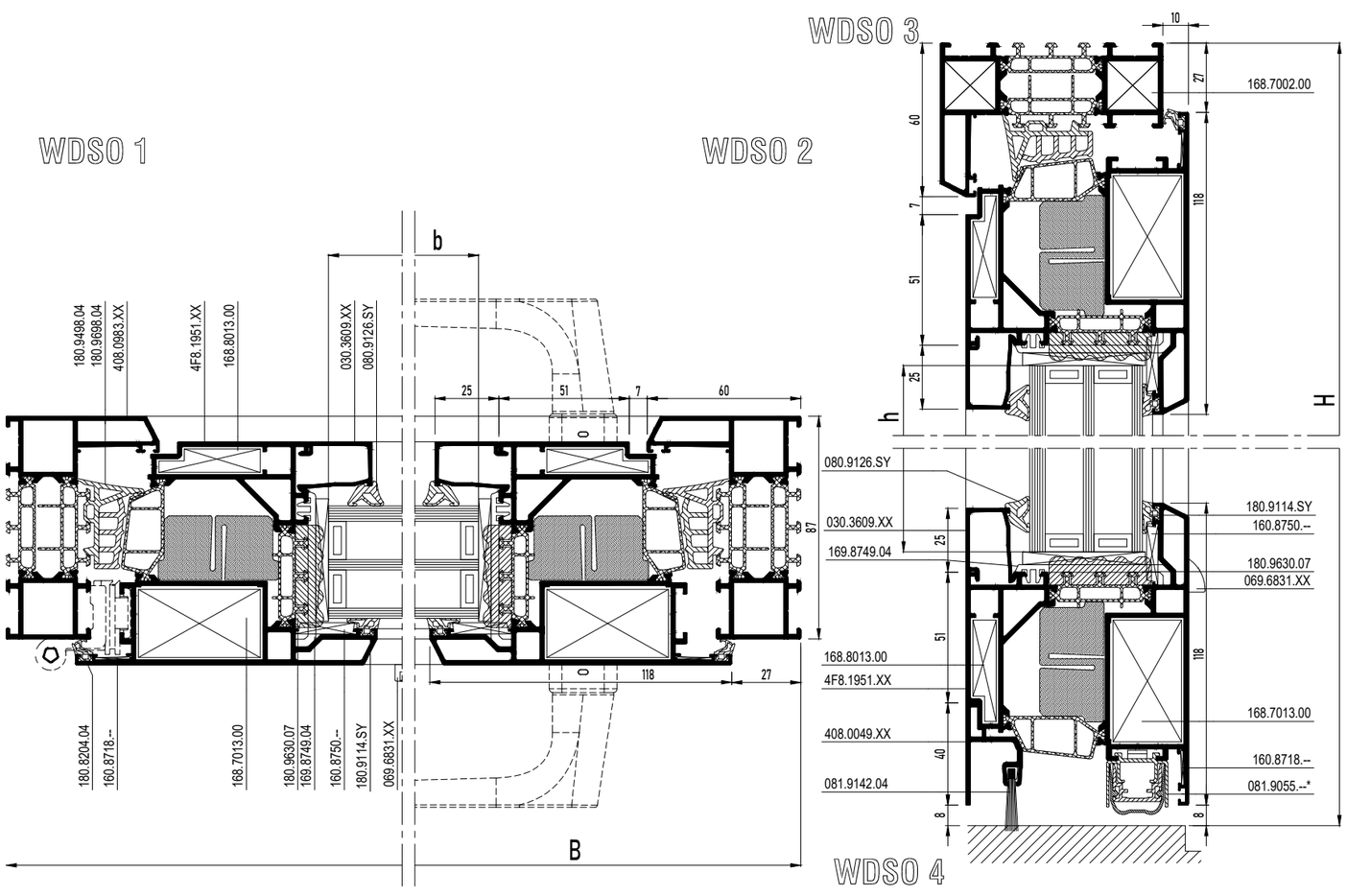

SECTIONS MASTERLINE 8-De

WINDOW-DOOR DOUBLE OUTWARD OPENING

MASTERLINE 8-De

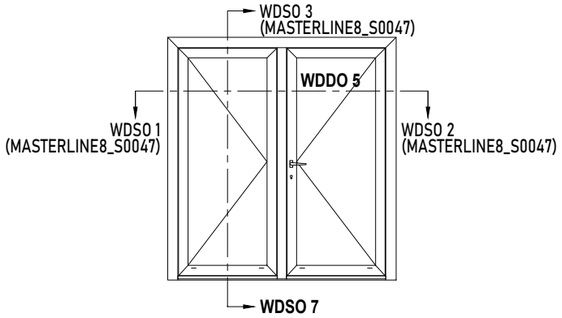

			#	Lm
408.0983.XX			1	B
			1	H
			1	H
4F8.1951.XX			2	B1 - 30.5
			2	B2 - 30.5
			4	H - 35
408.1115.XX			1	H - 77
030.3609.XX			2	B1 - 212.5
			2	B2 - 212.5
			4	H - 267
408.0049.XX			1	B1 - 113.5
			1	B2 - 116.5

b1 = B1 - 228.5
b2 = B2 - 228.5
h = H - 233

50mm
ZIE BEGLAZINGSMETHODE
VOIR METHODE DE VITRAGE
SEE GLAZING METHOD
ZIE VERGLASUNGSWEISE

RAAMDEURBESLAG > ZIE "OPENING DOORS"
ACCESSOIRES PORTES FENETRES > VOIRE "OPENING DOORS"
WINDOW-DOOR GEAR > SEE "OPENING DOORS"
ZUBEHOR FENSTERTUEREN > SIEHE "OPENING DOORS"

		#
168.7002.00		4
168.7013.00		8
168.8013.00		8
160.8750.--		10
160.8718.--		8
169.8749.04		19H.F. ...
069.6831.XX		19H.F. ...
169.6897.SY		1
052.5327.--		1
052.5318.--		1
080.9126.SY		(2xb1) + (2xb2)
		+ (4xh)
180.8204.04 of / ou / or / oder 022.0048.SY		(2XB)+(3XH)
		(2XB)+(3XH)
180.9114.SY		(2xb1) + (2xb2)
		+ (4xh)
180.9630.07		2 x B1
		2 x B2
		4 x H
180.9698.04		b1 + b2 + (3xh)
180.9498.04		2
169.7300.SY		2
081.9091.04		8x75mm
052.5311.--		8
169.7400.SY		1
081.9091.04		4x75mm
052.5311.--		4
081.9142.04		19H.F. ...
080.9633.07		H
180.9040.04		8

USING ESPAGNOLET

168.7013.00		6
168.7650.00		2

WDDO 5

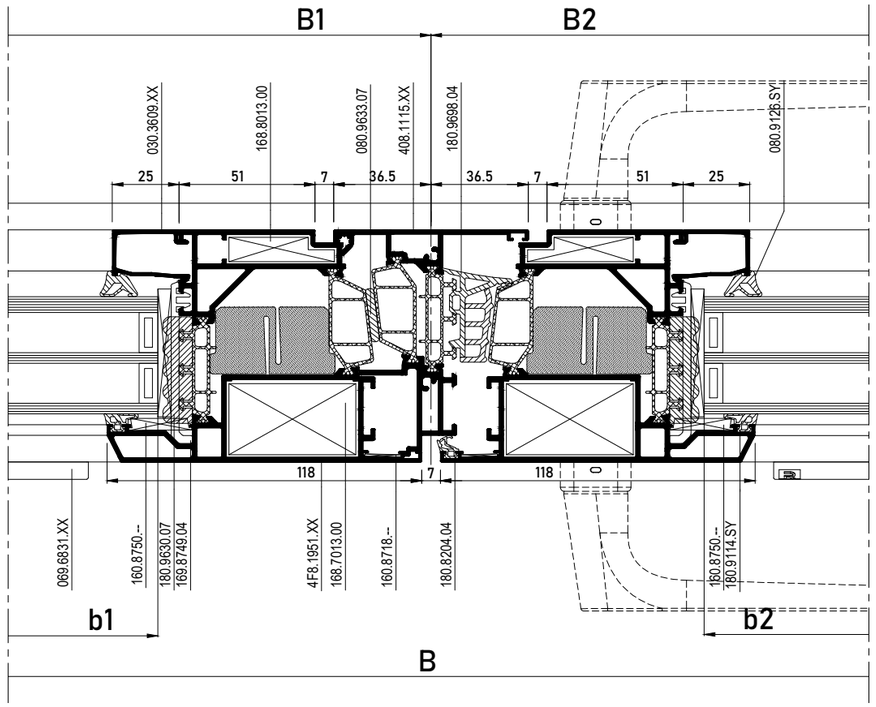

WDSO 7

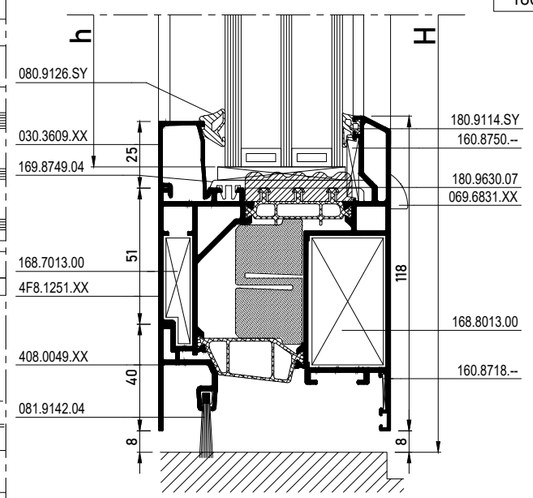

SECTIONS MASTERLINE 8-HV

TURN AND TILT WINDOW - HIDDEN VENT

MASTERLINE 8-HV

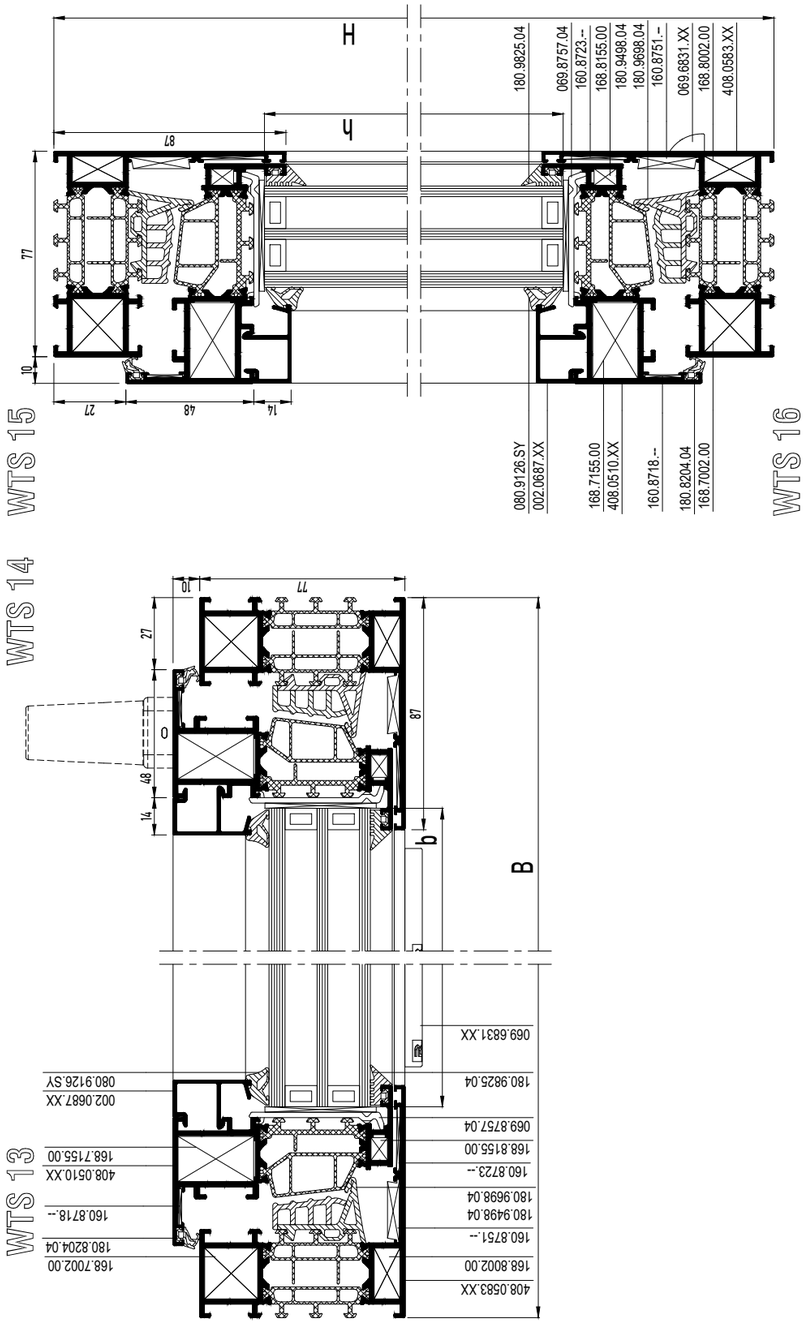

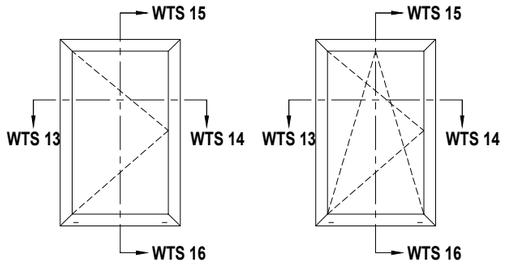

			#	Lm
408.0583.XX			2	B
			2	H
408.0510.XX			2	B - 54
			2	H - 54
002.0687.XX			2	B - 150
			2	H - 178

b = B - 158

h = H - 158

ZIE BEGLAZINGSMETHODE
VOIR METHODE DE VITRAGE
SEE GLAZING METHOD
ZIE VERGLASUNGSWEISE
≥ 45mm

		#
168.7002.00		4
168.8002.00		4
168.7155.00		4
168.8155.00		4
160.8723.--		4
160.8751.--		4
160.8718.--		4
069.8757.04		19H.F. ...
069.6831.XX		19H.F. ...
180.9698.04		(2xB) + (2xH)
180.9498.04		4
180.8204.04 of / ou / or / oder 022.0048.SY		(2xB)+(2xH)
080.9126.SY		(2xb) + (2xh)
180.9825.04		(2xb) + (2xh)

RAAMBESLAG > ZIE "HARDWARE CONFIGURATOR
ACCESSOIRES FENETRES > VOIRE "HARDWARE CONFIGURATOR"
WINDOW GEAR > SEE "HARDWARE CONFIGURATOR"
FENSTERBESCHLAG > SIEHE "HARDWARE CONFIGURATOR"

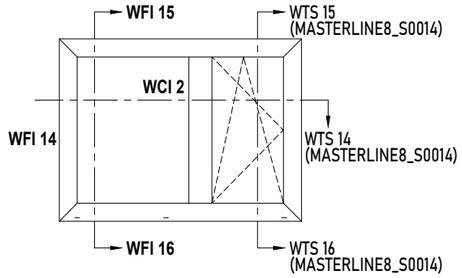

			#	Lm
408.0583.XX			2	b
			2	H
408.0520.XX			1	H - 66
408.1535.XX			2	B1 - 49.5
			1	H - 120
408.0510.XX			2	B2 - 37.5
			2	H - 54
002.0687.XX			2	B2 - 133.5
			2	H - 178
030.3610.XX			2	B1 - 76.5
			2	H - 170

b1 = B1 - 92.5
h1 = H - 136
b2 = B2 - 141.5
h2 = H - 158

ZIE BEGLAZINGSMETHODE
VOIR METHODE DE VITRAGE
SEE GLAZING METHOD
ZIE VERGLASUNGSWEISE

		#
168.7002.00		4
168.8002.00		4
168.7155.00		4
168.8155.00		4
160.8723.--		4
160.8751.--		8
160.8718.--		4
168.8712.00		2
168.5000.00		4
168.8742.00		2
168.5012.--		1
168.8688.04		4
069.8757.04		19H.F. ...
169.8748.04		19H.F. ...
069.6831.XX		19H.F. ...
180.9630.07		(2xB1)+(2xH)
180.9698.04		(2xB2)+(2xH)
180.9498.04		4
180.8204.04		(2xB2)+(2xH)
of / ou / or / oder		
022.0048.SY		(2xB2)+(2xH)
180.9120.04		(2xb1)+(2xh1)
080.9124.SY		(2xb1)+(2xh1)
080.9126.SY		(2xb2)+(2xh2)
180.9825.04		(2xb2)+(2xh2)
052.5318.--		19H.F. ...
180.9020.04		19H.F. ...

RAAMBESLAG > ZIE "OPENING WINDOWS"
ACCESSOIRES FENETRES > VOIRE "OPENING WINDOWS"
WINDOW GEAR > SEE "OPENING WINDOWS"
FENSTERBESCHLAG > SIEHE "OPENING WINDOWS"

WFI 15

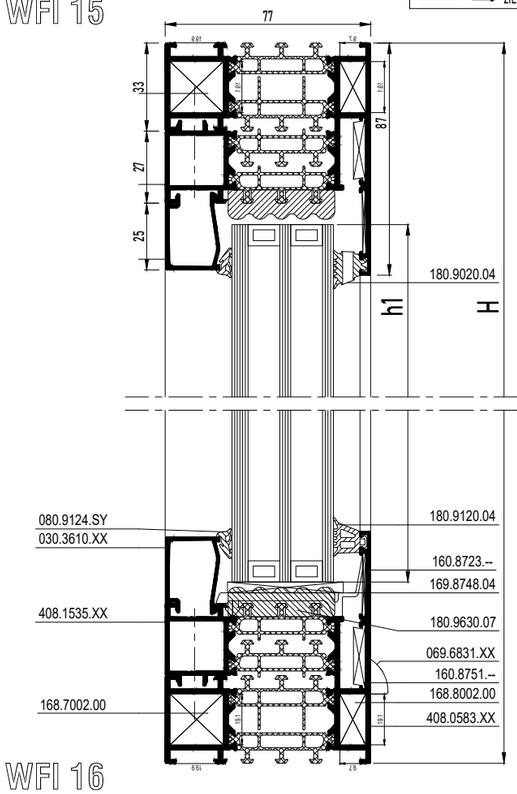

WFI 14

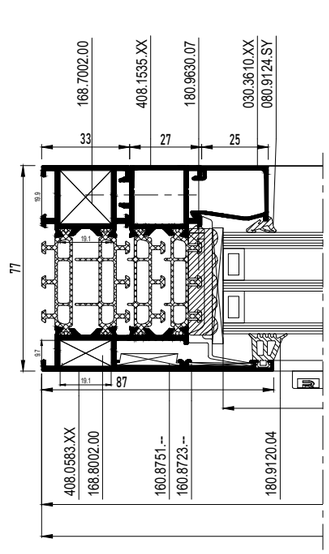

WCI 2

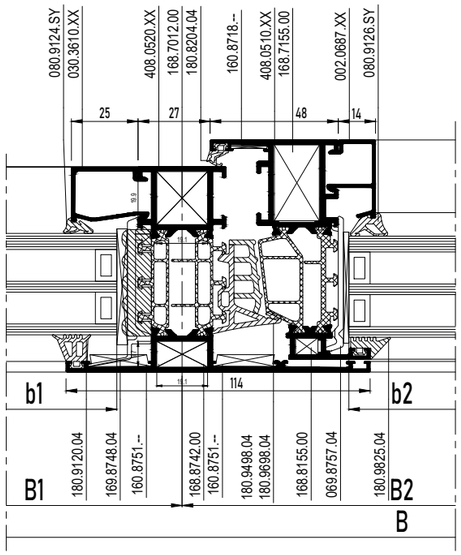

WFI 16

SECTIONS MASTERLINE 8-HV

DOUBLE CASEMENT WINDOW - HIDDEN VENT

MASTERLINE 8-HV

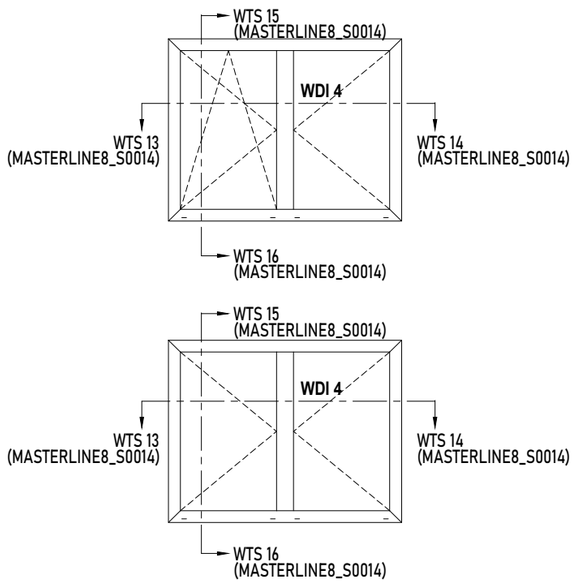

			#	Lm
408.0583.XX			2	B
			2	H
408.0510.XX			2	B1 - 30.5
			2	B2 - 30.5
			4	H - 54
002.0687.XX			2	B1 - 126.5
			2	B2 - 126.5
			4	H - 178
408.1545.XX			1	H - 126

b1 = B1 - 134.5
b2 = B2 - 134.5
h = H - 158

ZIE BEGLAZINGSMETHODE
VOIR METHODE DE VITRAGE
SEE GLAZING METHOD
ZIE VERGLASUNGSWEISE

		#
168.7002.00		4
168.8002.00		4
168.7155.00		8
168.8155.00		8
160.8723.--		4
160.8751.--		4
160.8718.--		8
069.8757.04		PROD STEPS
069.6831.XX		PROD STEPS
080.9633.07		(1xH)
180.9698.04		(2xB) + (3xH)
180.9498.04		4
180.8204.04		(2xB)+(3xH)
of / ou / or / oder		
022.0048.SY		(2xB)+(3xH)
080.9126.SY		(2xb1) + (2xb2)
		(2xh1) + (2xh2)
180.9825.04		(2xb1) + (2xb2)
		(2xh1) + (2xh2)
169.6910.SY		1
052.5312.--		2
052.5327.--		2
052.5318.--		PROD STEPS

RAAMBESLAG > ZIE HARDWARE CONFIGURATOR
ACCESSOIRES FENETRES > VOIRE HARDWARE CONFIGURATOR
WINDOW GEAR > SEE HARDWARE CONFIGURATOR
FENSTERBESCHLAG > SIEHE HARDWARE CONFIGURATOR

WDI 4

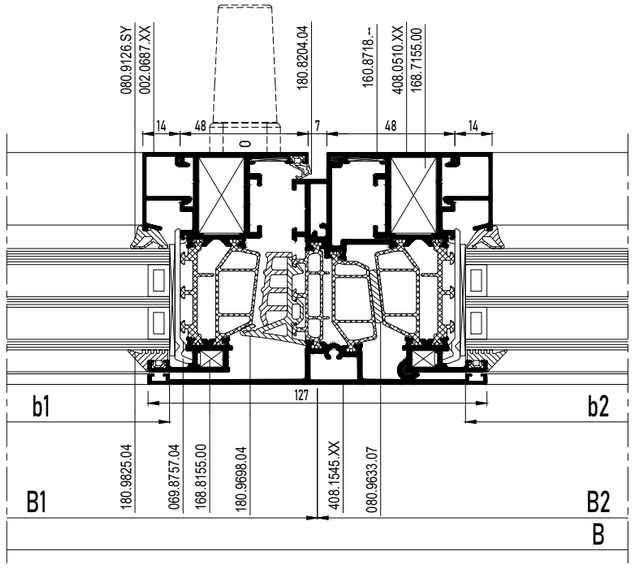

SECTIONS MASTERLINE 8-HV

TURN AND TILT WINDOW - HIDDEN VENT

MASTERLINE 8-HV

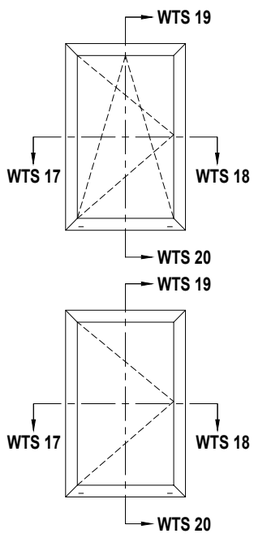

			#	Lm
408.0583.XX			2	B
			2	H
408.0502.XX			2	B - 54
			2	H - 54
130.1533.XX			2	B - 143
			2	H - 176

b = B - 156
h = H - 156

		#
168.7002.00		4
168.8002.00		4
168.7011.00		4
168.8150.00		4
160.8723.--		4
160.8751.--		4
160.8718.--		4
169.8757.00		1
069.6831.XX		PROD STEPS
080.9631.07		(2xB) + (2xH)
180.9698.04		(2xB) + (2xH)
180.9498.04		4
180.8204.04 of / ou / or / oder 022.0048.SY		(2xB)+(2xH)
		(2xB)+(2xH)
180.9120.04		(2xb) + (2xh)
180.9641.04		(2xb) + (2xh)

RAAMBESLAG > ZIE HARDWARE CONFIGURATOR
ACCESSOIRES FENETRES > VOIRE HARDWARE CONFIGURATOR
WINDOW GEAR > SEE HARDWARE CONFIGURATOR
FENSTERBESCHLAG > SIEHE HARDWARE CONFIGURATOR

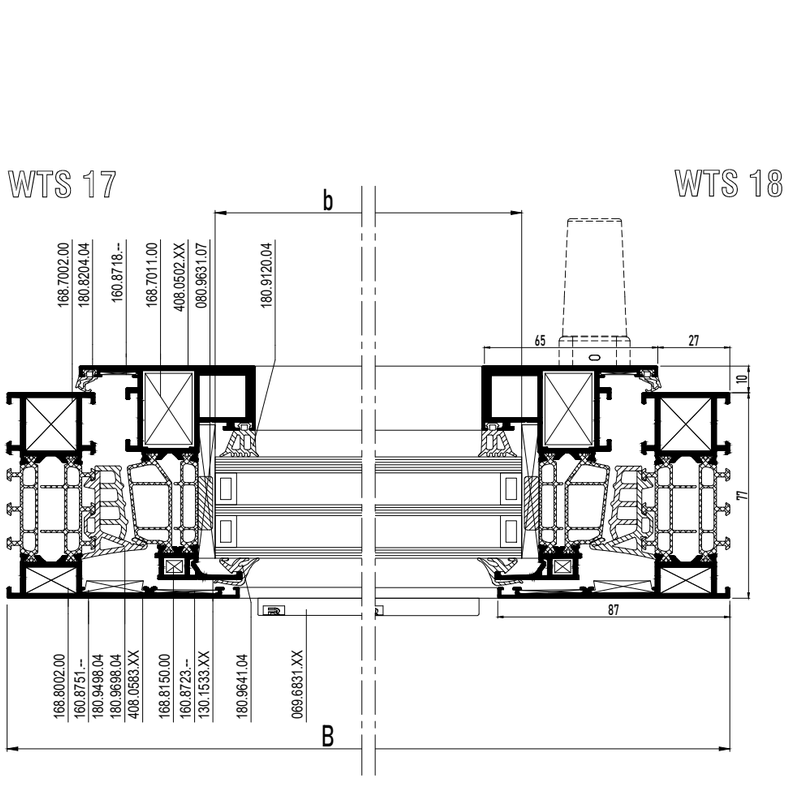

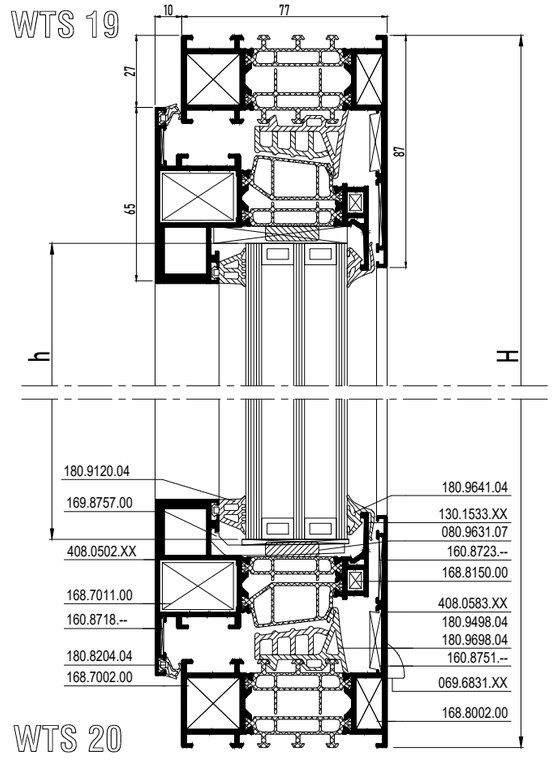

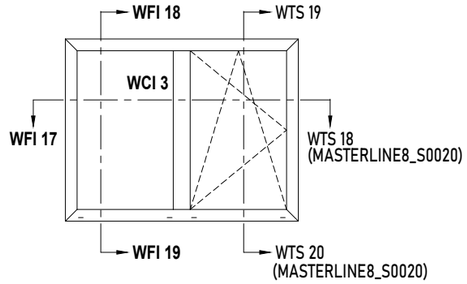

			#	Lm
408.0583.XX			2	B
			2	H
408.0520.XX			1	H - 66
408.1535.XX			2	B1 - 49.5
			1	H - 120
408.0502.XX			2	B2 - 37.5
			2	H - 54
130.1533.XX			2	B2 - 143
			2	H - 176
030.3610.XX			2	B1 - 76.5
			2	H - 170

b1 = B1 - 92.5
h1 = H - 136
b2 = B2 - 139.5
h2 = H - 156

		#
168.7002.00		4
168.8002.00		4
168.7011.00		4
168.8150.00		4
160.8723.--		4
160.8751.--		8
160.8718.--		4
168.8712.00		2
168.5000.00		4
168.8742.00		2
168.5012.--		1
160.8746.00		4
168.8688.04		4
169.8757.00		1
169.8748.04		19H.F. ...
069.6831.XX		19H.F. ...
080.9631.07		(2xB2) + (2xH)
180.9630.07		(2xB1) + (2xH)
180.9698.04		(2xB2) + (2xH)
180.9498.04		4
180.8204.04 of / ou / or / oder 022.0048.SY		(2xB2)+(2xH)
		(2xB2)+(2xH)
180.9120.04		(2xb1) + (2xh1)
		(2xb2) + (2xh2)
080.9124.SY		2 x b1 + 2 x h1
180.9641.04		(2xb2) + (2xh2)
052.5318.--		19H.F. ...
180.9020.04		19H.F. ...

RAAMBESLAG > ZIE "OPENING WINDOWS"
ACCESSOIRES FENETRES > VOIRE "OPENING WINDOWS"
WINDOW GEAR > SEE "OPENING WINDOWS"
FENSTERBESCHLAG > SIEHE "OPENING WINDOWS"

WFI 17

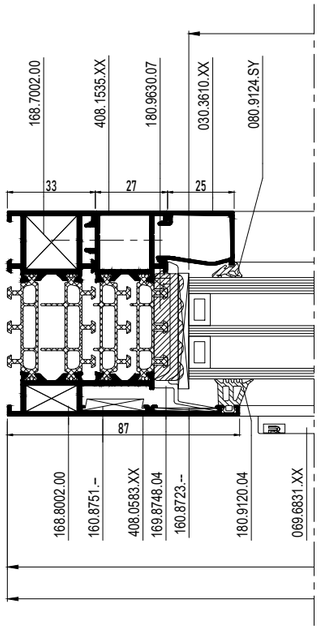

WCI 3

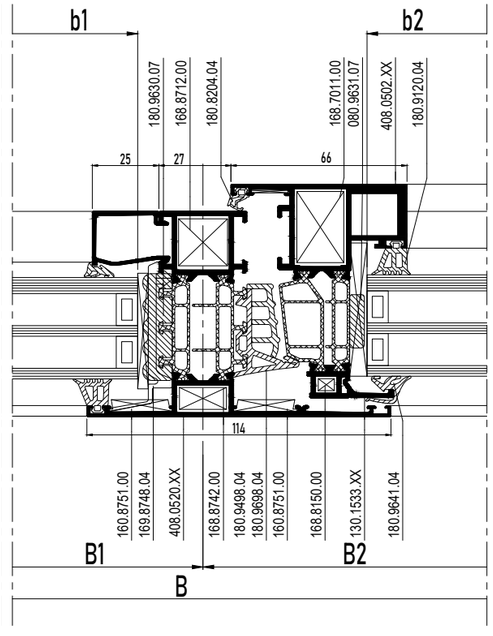

WFI 18

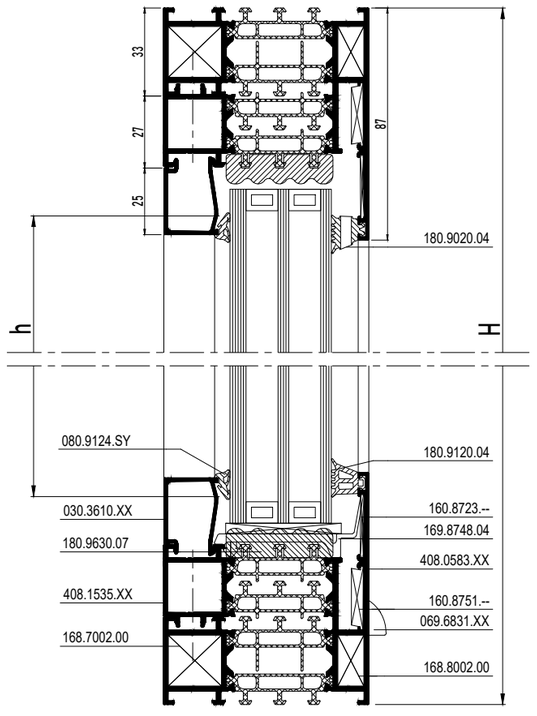

WFI 19

SECTIONS MASTERLINE 8-HV

DOUBLE CASEMENT WINDOW - HIDDEN VENT

MASTERLINE 8-HV

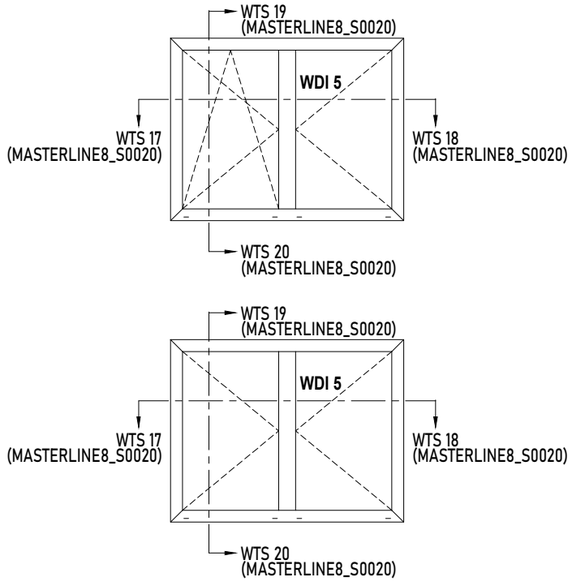

WDI 5

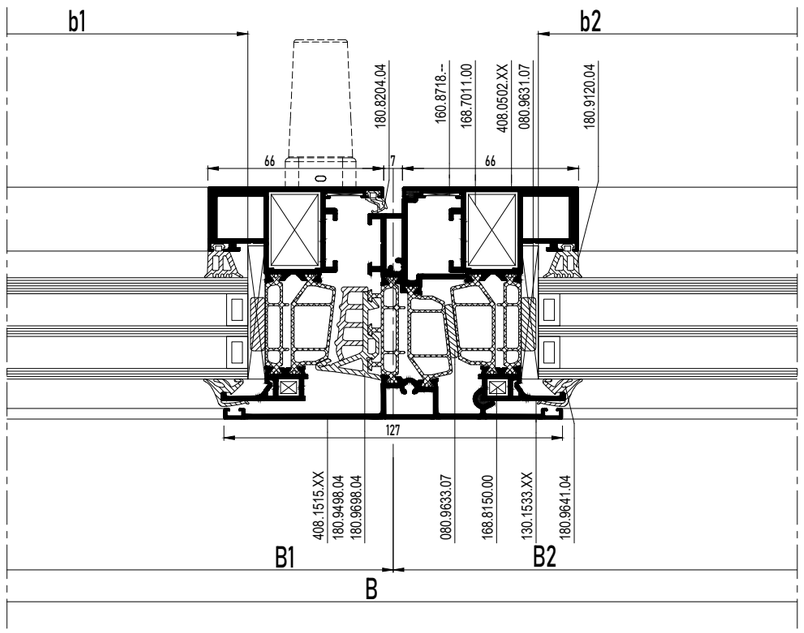

			#	Lm
408.0583.XX			2	B
			2	H
408.0502.XX			2	B1 - 30.5
			2	B2 - 30.5
			4	H - 54
130.1533.XX			2	B1 - 119.5
			2	B2 - 119.5
			4	H - 176
408.1515.XX			1	H - 126

b1 = B1 - 132.5
b2 = B2 - 132.5
h = H - 156

		#
168.7002.00		4
168.8002.00		4
168.7011.00		8
168.8150.00		8
160.8723.--		4
160.8751.--		4
160.8718.--		8
169.8757.00		2
069.6831.XX		PROD STEPS
080.9631.07		(2xB1) + (2xH)
		(2xB2) + (2xH)
080.9633.07		1xH
180.9698.04		(2xB) + (3xH)
180.9498.04		4
180.8204.04 of / ou / or / oder 022.0048.SY		(2xB)+(3xH)
		(2xB)+(3xH)
180.9120.04		(2xb1) + (2xh)
		(2xb2) + (2xh)
180.9641.04		(2xb1) + (2xh)
		(2xb2) + (2xh)
169.6905.SY		1
052.5312.--		2
052.5327.--		2
052.5318.--		PROD STEPS

RAAMBESLAG > ZIE HARDWARE CONFIGURATOR
ACCESSOIRES FENETRES > VOIRE HARDWARE CONFIGURATOR
WINDOW GEAR > SEE HARDWARE CONFIGURATOR
FENSTERBESCHLAG > SIEHE HARDWARE CONFIGURATOR

SECTIONS Masterline 8-HV Balcony Door 2024

BALCONY DOOR DOUBLE INWARD OPENING (CONCEALED HARDWARE) - HIDDEN VENT

MASTERLINE 8-HV

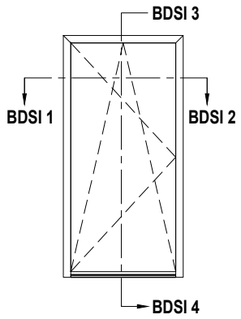

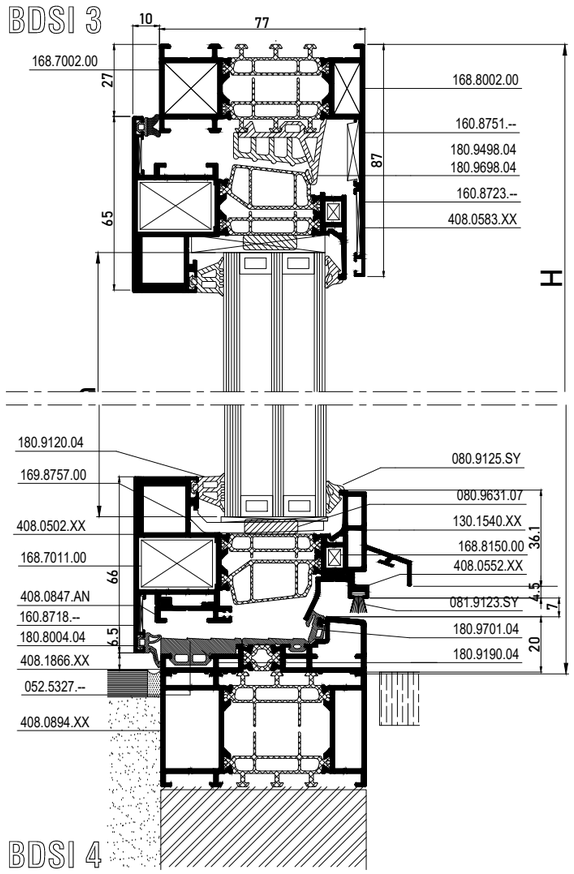

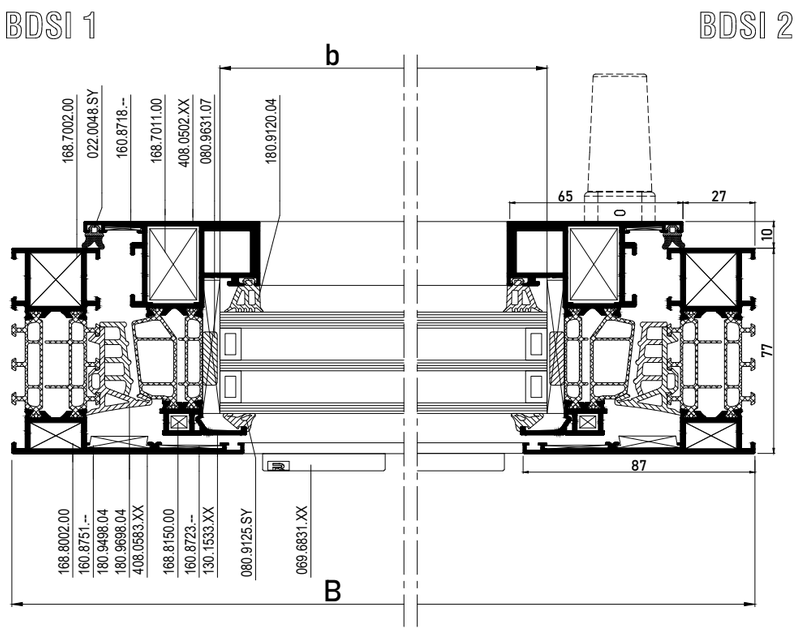

			#	Lm
408.0583.XX			1	B
			1	H
			1	H
408.0502.XX			2	B - 54
			2	H - 35
130.1540.XX			1	B - 196
408.1866.XX			1	B - 66
408.0552.XX			1	B - 196
408.0894.XX			1	B
408.0847.AN			1	B - 138
130.1533.XX			1	B - 176
			2	H - 124

b = B - 156
h = H - 136.5

ZIE BEGLAZINGSMETHODE
VOIR METHODE DE VITRAGE
SEE GLAZING METHOD
ZIE VERGLASUNGSWEISE
≥ 50mm

OPTIE / OPTION (*)

RAAMBESLAG > ZIE "OPENING WINDOWS"
ACCESSOIRES FENETRES > VOIRE "OPENING WINDOWS"
WINDOW GEAR > SEE "OPENING WINDOWS"
FENSTERBESCHLAG > SIEHE "OPENING WINDOWS"

ENKEL VOOR ZICHTBAAR RAAMBESLAG
POUR LES FERRURES DE FENÊTRES VISIBLES UNIQUEMENT
FOR VISIBLE WINDOW HARDWARE ONLY
NUR FÜR SICHTBARE FENSTERBESCHLÄGE

DIN R = 169.8532.--		1
of / ou / or / oder		
DIN L = 169.8531.--		1
052.5355.--		1

		#
168.7002.00		2
168.8002.00		2
168.7011.00		4
168.8150.00		4
160.8723.--		2
160.8718.--		4
160.8750.--		2
168.8732.00		2
068.9937.--		2
169.8748.04		19H.F. ...
180.8004.04		B
022.0048.SY		B + (2xH)
080.9125.SY		(2xb)+(2xh)
180.9698.04		B+(2xH)
180.9498.04		2
180.9730.04		B
180.9190.04		B
080.9631.07		(2xB)+(2xH)
180.9120.04		(2xb)+(2xh)
169.8453.04		1
052.5320.--		4
169.8450.04		1
169.6990.04		1
081.9123.SY		B
052.5200.--		B/300
052.5327.--		B/300
052.5312.--		B/300
169.8500.--		1

SECTIONS Masterline 8-HV Balcony Door 2024

BALCONY DOOR DOUBLE INWARD OPENING (CONCEALED HARDWARE) - HIDDEN VENT

MASTERLINE 8-HV

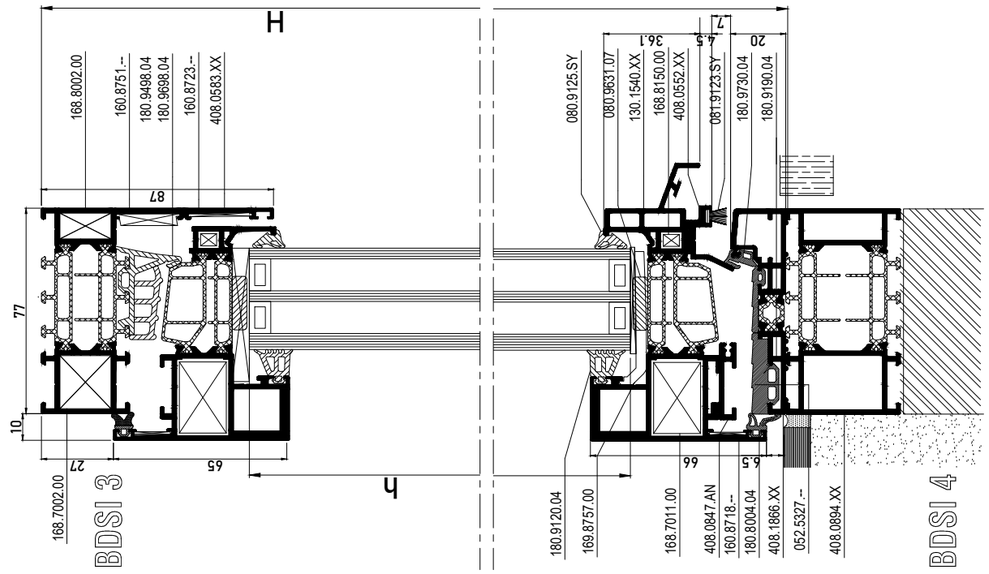

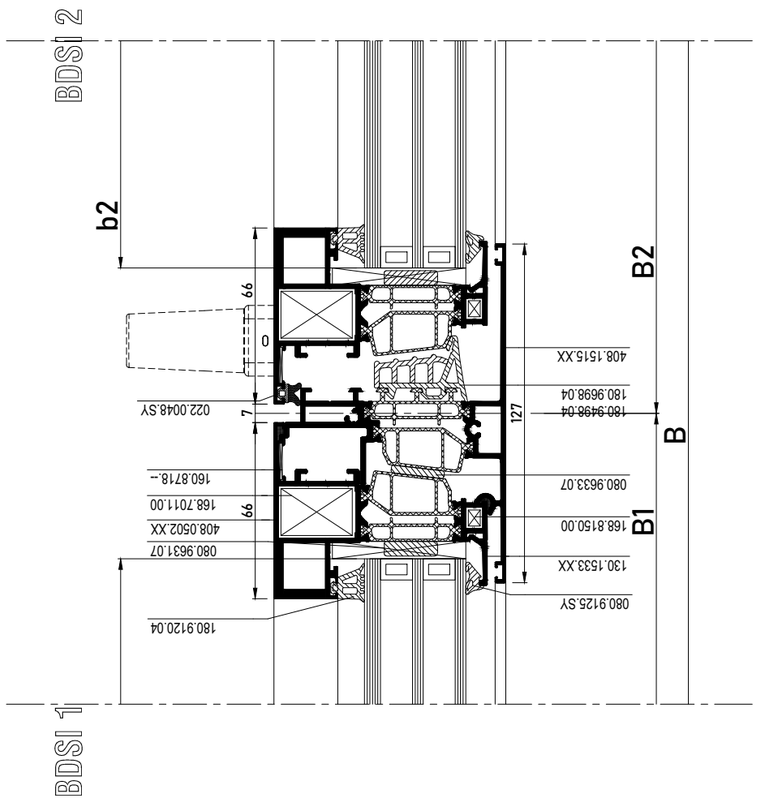

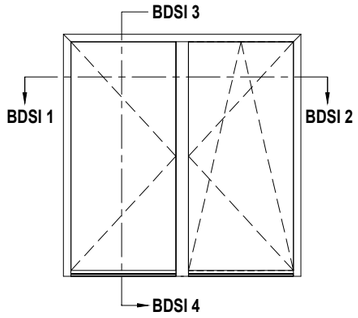

b1 = B1-132.5
b2 = B2-132.5
h = H - 137

ZIE BEGLAZINGSMETHODE
VOIR METHODE DE VITRAGE
SEE GLAZING METHOD
ZIE VERGLASUNGSWEISE
50mm

OPTIE / OPTION (*)

RAAMBESLAG > ZIE "OPENING WINDOWS"
ACCESSOIRES FENETRES > VOIRE "OPENING WINDOWS"
WINDOW GEAR > SEE "OPENING WINDOWS"
FENSTERBESCHLAG > SIEHE "OPENING WINDOWS"

ENKEL VOOR ZICHTBAAR RAAMBESLAG
POUR LES FERRURES DE FENÊTRES VISIBLES UNIQUEMENT
FOR VISIBLE WINDOW HARDWARE ONLY
NUR FÜR SICHTBARE FENSTERBESCHLÄGE

169.8531.--		1
169.8532.--		1

			#	Lm
408.0583.XX			1	B
			1	H
			1	H
408.0502.XX			2	B1 - 30.5
			2	B2 - 30.5
			4	H - 35
130.1533.XX			2	B1 - 152.5
			2	B2 - 152.5
			4	H - 124
408.1515.XX			1	H - 96
130.1540.XX			1	B1 - 172.5
			1	B2 - 172.5
408.1866.XX			2	B - 66
408.0052.XX			1	B1 - 172.5
			1	B2 - 172.5
408.0894.XX			1	B
408.0847.AN			1	B1 - 114.5
			1	B2 - 114.5

168.7002.00		2
168.8002.00		2
168.7011.00		8
168.8150.00		8
160.8723.--		2
160.8718.--		8
160.8750.--		10
168.8732.00		2
068.9937.--		2
169.8748.04		19H.F. ...
180.8004.04		B
022.0048.SY		B + (3xH)
080.9125.SY		(2xb1) + (2xh)
		(2xb2) + (2xh)
180.9698.04		(2xB)+(3xH)
180.9498.04		4
180.9730.04		B
180.9190.04		B
080.9631.07		(2xB1) + (2xH)
		(2xB2) + (2xH)
180.9120.04		(2xb1) + (2xh)
		(2xb2) + (2xh)
169.8450.04		2
169.6990.04		1
081.9123.SY		B

169.8453.04		1
052.5320.--		8
169.8500.--		2
052.5200.--		B/300
052.5327.--		B/300
052.5318.--		19H.F. ...

DIN R =

169.8470.04		1
052.5312.--		2
052.5327.--		2
169.8473.04		1

DIN L =

169.8490.04		1
052.5312.--		2
052.5327.--		2
169.8493.04		1

SECTIONS Masterline 8-HV Balcony Door 2024

BALCONY DOOR DOUBLE INWARD OPENING (CONCEALED HARDWARE) - HIDDEN VENT - VARIANT

MASTERLINE 8-HV

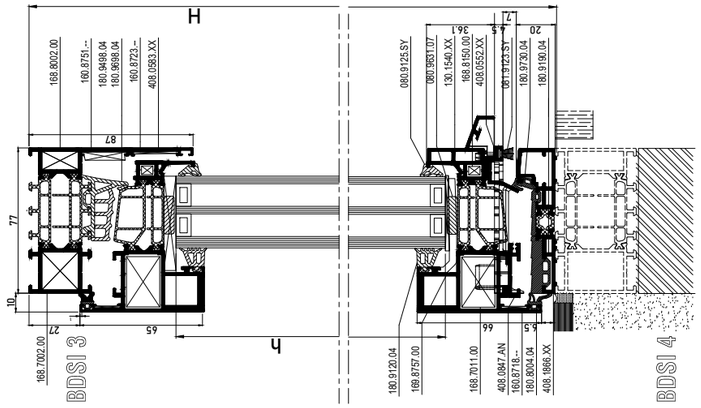

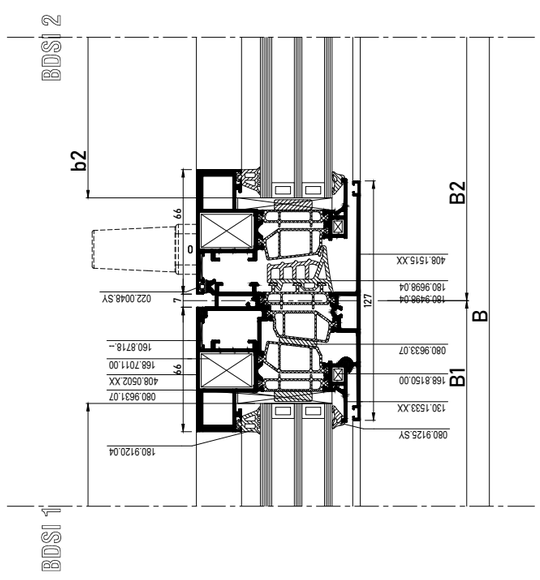

		#	
408.0583.XX		1	B
		1	H
		1	H
408.0502.XX		2	B1 - 30.5
		2	B2 - 30.5
		4	H - 35
130.1533.XX		2	B1 - 152.5
		2	B2 - 152.5
		4	H - 124
408.1515.XX		1	H - 96
130.1540.XX		1	B1 - 172.5
		1	B2 - 172.5
408.1866.XX		2	B - 66
408.0052.XX		1	B1 - 172.5
		1	B2 - 172.5
408.0894.XX		1	B
408.0847.AN		1	B1 - 114.5
		1	B2 - 114.5
408.0583.XX		1	B
		1	H - 7.3
		1	H - 7.3
408.1866.XX		1	B

169.8453.04		1
052.5320.--		8
169.8500.--		2
052.5200.--		B/300
052.5327.--		B/300
052.5318.--		19H.F. ...

DIN R =

DIN L =

		#
168.7002.00		2
168.8002.00		2
168.7011.00		8
168.8150.00		8
160.8723.--		2
160.8718.--		8
160.8750.--		10
168.8732.00		2
068.9937.--		2
169.8748.04		19H.F. ...
180.8004.04		B
022.0048.SY		B + (3xH)
080.9125.SY		(2xb1) + (2xh)
		(2xb2) + (2xh)
180.9698.04		(2xB)+(3xH)
180.9498.04		4
180.9730.04		B
180.9190.04		B
080.9631.07		(2xB1) + (2xH)
		(2xB2) + (2xH)
180.9120.04		(2xb1) + (2xh)
		(2xb2) + (2xh)
169.8450.04		2
169.6990.04		1
081.9123.SY		B

169.8470.04		1
052.5312.--		2
052.5327.--		2
169.8473.04		1
169.8490.04		1
052.5312.--		2
052.5327.--		2
169.8493.04		1

b1 = B1-132.5	
b2 = B2-132.5	
h = H - 135	

ZIE BEGLAZINGSMETHODE
VOIR METHODE DE VITRAGE
SEE GLAZING METHOD
ZIE VERGLASUNGSWEISE

OPTIE / OPTION (*)

RAAMBESLAG > ZIE "OPENING WINDOWS"
ACCESSOIRES FENETRES > VOIRE "OPENING WINDOWS"
WINDOW GEAR > SEE "OPENING WINDOWS"
FENSTERBESCHLAG > SIEHE "OPENING WINDOWS"

ENKEL VOOR ZICHTBAAR RAAMBESLAG
POUR LES FERRURES DE FENÊTRES VISIBLES UNIQUEMENT
FOR VISIBLE WINDOW HARDWARE ONLY
NUR FÜR SICHTBARE FENSTERBESCHLÄGE

169.8531.--		1
169.8532.--		1

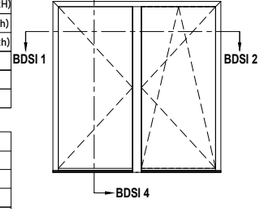

SECTIONS Masterline 8-HV Balcony Door 2024

BALCONY DOOR DOUBLE INWARD OPENING (CONCEALED HARDWARE) - HIDDEN VENT - VARIANT

MASTERLINE 8-HV

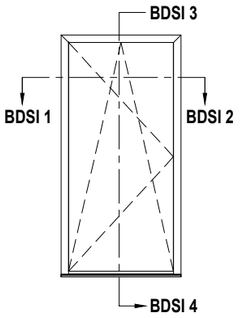

b = B - 156
h = H - 136.5

ZIE BEGLAZINGSMETHODE
VOIR METHODE DE VITRAGE
SEE GLAZING METHOD
ZIE VERGLASUNGSWEISE
50mm

ENKEL VOOR ZICHTBAAR RAAMBESLAG
POUR LES FERRURES DE FENÊTRES VISIBLES UNIQUEMENT
FOR VISIBLE WINDOW HARDWARE ONLY
NUR FÜR SICHTBARE FENSTERBESCHLÄGE

DIN R = 169.8532.--		1
of / ou / or / oder		
DIN L = 169.8531.--		1
052.5355.--		1

OPTIE / OPTION (*)

RAAMBESLAG > ZIE "OPENING WINDOWS"
ACCESSOIRES FENETRES > VOIRE "OPENING WINDOWS"
WINDOW GEAR > SEE "OPENING WINDOWS"
FENSTERBESCHLAG > SIEHE "OPENING WINDOWS"

		#	Lm
408.0583.XX		1	B
		1	H
		1	H
408.0502.XX		2	B - 54
		2	H - 35
130.1533.XX		1	B - 176
		2	H - 124
130.1540.XX		1	B - 196
408.1866.XX		1	B - 66
408.0552.XX		1	B - 196
408.0894.XX		1	B
408.0847.XX		1	B - 138
408.0583.XX		1	B
		1	H - 7.3
		1	H - 7.3
408.1866.XX		1	B

		#
168.7002.00		2
168.8002.00		2
168.7011.00		4
168.8150.00		4
160.8723.--		2
160.8718.--		4
160.8750.--		2
168.8732.00		2
068.9937.--		2
169.8748.04		19H.F. ...
180.8004.04		B
022.0048.SY		B + (2xH)
080.9125.04		(2xb)+(2xh)
180.9698.04		B+(2xH)
180.9498.04		2
180.9701.04		B
180.9190.04		B-69
080.9631.07		(2xB)+(2xH)
180.9120.04		(2xb)+(2xh)
169.8453.04		1
052.5320.--		4
169.8450.04		1
169.6990.04		1
081.9123.SY		B
052.5200.--		B/300
052.5327.--		B/300
169.8500.--		1

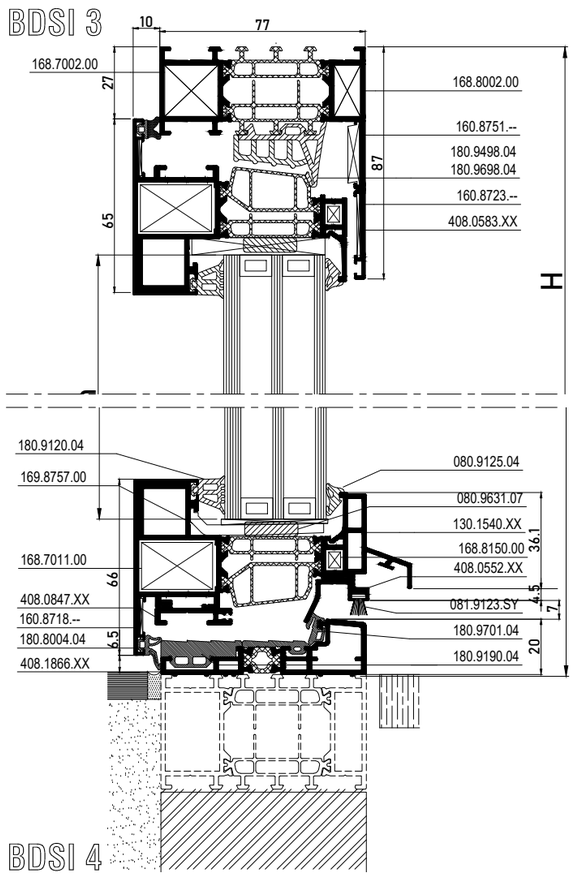

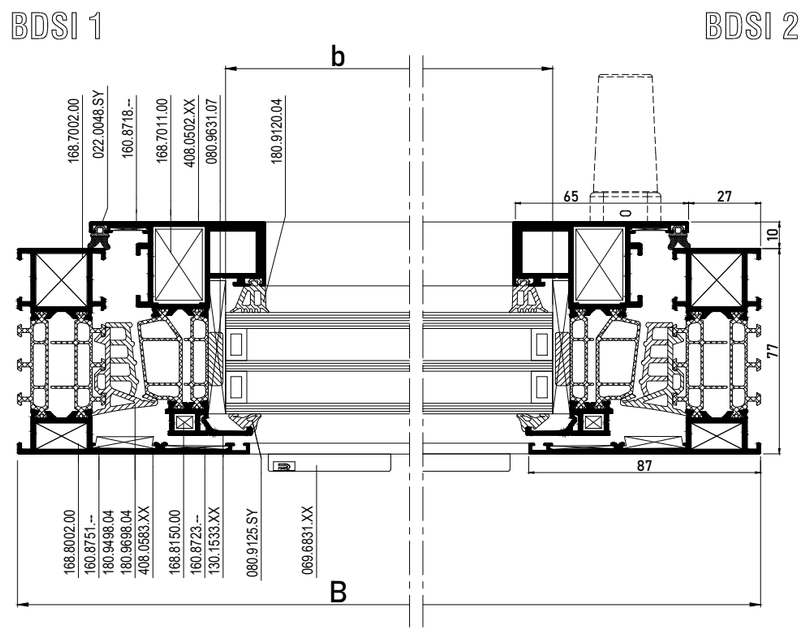

SECTIONS MASTERLINE 8-Fu

DOOR HI -> HI+

MASTERLINE 8-Fu

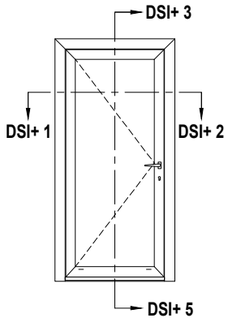

DSI+ 3

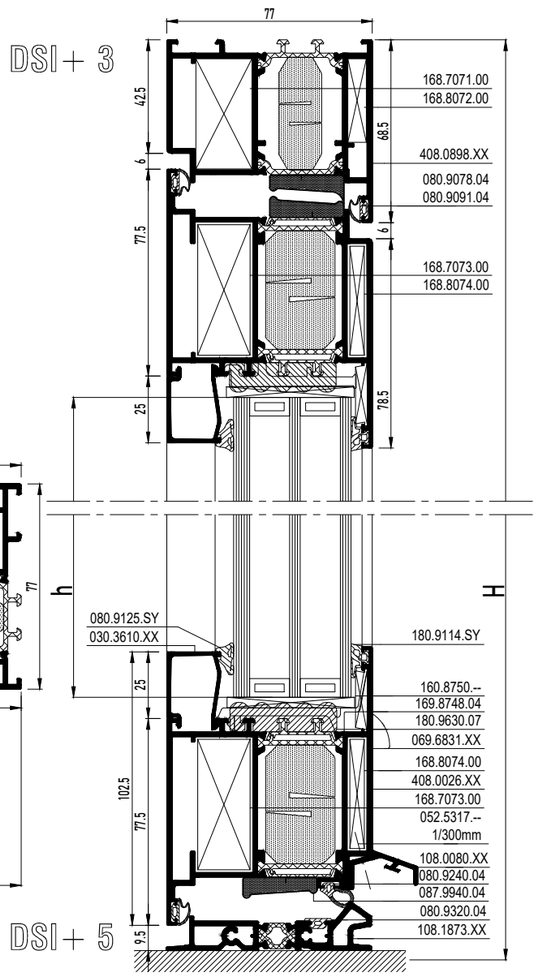

DSI+ 1

DSI+ 2

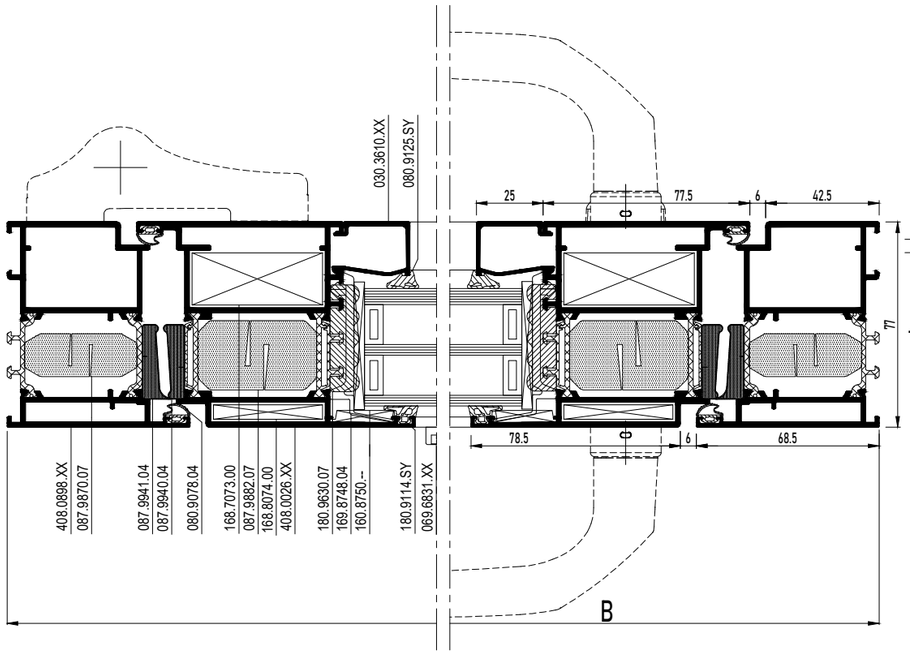

			#	Lm
030.3610.XX			2	B-252
			2	H-263
108.1873.XX			1	B - 143
108.0080.XX			1	B - 133
408.0898.XX			1	B
			1	H
			1	H
+				
087.9870.07			1	B
			1	H
			1	H
408.0026.XX			2	B-97
			2	H-58
+				
087.9882.07			2	B-97
			2	H-58

b = B - 268

h = H - 229

ZIE BEGLAZINGSMETHODE
VOIR METHODE DE VITRAGE
SEE GLAZING METHOD
SIEHE VERGLASUNGSWEISE
≥ 50mm

BESLAG DEUREN > ZIE "HARDWARE CONFIGURATOR
ACCESSOIRES PORTES > VOIRE "HARDWARE CONFIGURATOR"
DOORS GEAR > SEE "HARDWARE CONFIGURATOR"
TUERENBESCHLAG > SIEHE "HARDWARE CONFIGURATOR"

		#
168.7071.00		2
168.8072.00		2
168.7073.00		4
168.8074.00		4
160.8750.--		4
169.8748.04		PROD STEPS
052.5317.--		1/300mm
052.5316.--		2
069.6831.XX		PROD STEPS
069.8360.04		1
052.5313.--		4
052.5316.--		4
069.8426.04		2
052.5316.--		4
081.9229.07		4x(60.5mm)
069.8373.04		1
080.9078.04		(3xB)+(4xH)
080.9091.04		6
080.9320.04		B
080.9240.04		PROD STEPS
080.9125.SY		(2xb)+(2xh)
180.9114.SY		(2xb)+(2xh)
180.9630.07		(2xb)+(2xh)
+		
087.9940.04		(2xB)
		(2xH)
087.9941.04		B
		(2xH)

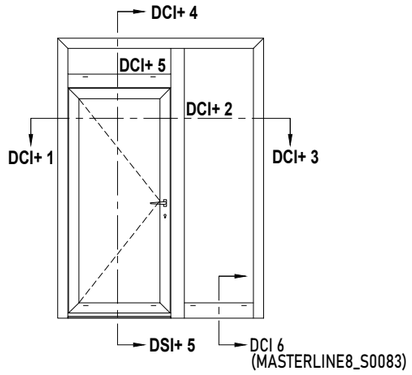

b1 = B1 - 265.5
h1 = H1 - 213.5
b2 = B2 - 95.5
h2= H - 155
b3 = B1 - 95.5
h3 = H3 - 95.5

50mm ZIE BEGLAZINGSMETHODE
VOIR METHODE DE VITRAGE
SEE GLAZING METHOD
SIEHE VERGLASUNGSWEISE

BESLAG DEUREN > ZIE "OPENING DOORS"
ACCESSOIRES PORTES > VOIRE "OPENING DOORS"
DOORS GEAR > SEE "OPENING DOORS"
TUERENBESCHLAG > SIEHE "OPENING DOORS"

	#	Lm
408.0125.XX	1	B
	1	H
	1	H
408.0026.XX	2	B1 - 93.5
	2	H1 - 43
408.0029.XX	1	B1 - 69.5
	1	H1 - 21.5
	1	H1 - 21.5
408.0114.XX	1	B1 - 79.5
	1	H - 53
408.1142.XX	1	B2 - 79.5
030.3610.XX	2	B1 - 249.5
	2	H1 - 251.5
	2	B1 - 79.5
	2	H3 - 129.5
	2	B2 - 79.5
	2	H - 189
108.1873.XX	1	B - 139.5
108.0080.XX	1	B - 129.5
+		
087.9882.07	2	B1 - 94.5
	2	H1 - 46.5
508.0125.XX	1	B
	1	H
	1	H
508.0026.XX	2	B1 - 93.5
	2	H1 - 43
508.0029.XX	1	B1 - 69.5
	1	H1 - 21.5
	1	H1 - 21.5

	#
168.7073.00	4
168.8074.00	4
168.7004.00	2
168.8004.00	2
160.8750.--	14
168.8714.00	3
168.5000.00	6
168.8712.00	4
168.5000.00	8
168.8688.04	10
169.8748.04	19H.F. ...
069.6831.XX	19H.F. ...
069.8426.04	2
052.5316.--	4
069.8373.04	1
187.1142.07	B2 - 79.5
168.8742.00	10
168.5012.--	7
052.5327.--	1/300mm
052.5317.--	1/300mm
069.8360.04	1
052.5313.--	4
052.5316.--	4
080.9078.04	B1+(2xH1)
080.9091.04	4
080.9381.04	(2xB1)+(4xH1)
080.9125.SY	(2xb1)+(2xh1)
	(2xb2)+(2xh2)
	(2xb3)+(2xh3)
180.9630.07	(4xb1)
	(2xb2)
	(4xh3)
080.8442.04	B1+(2xH1)
+	

	#
087.9940.04	(2xB)
	(2xH)
087.9941.04	B
	(2xH)
180.9114.SY	(4xb1)
	(2xb2)
	(4xh3)
081.9229.07	4x(60mm)

SECTIONS MASTERLINE 8-Fu

COMBINED DOOR HI -> HI+

MASTERLINE 8-Fu

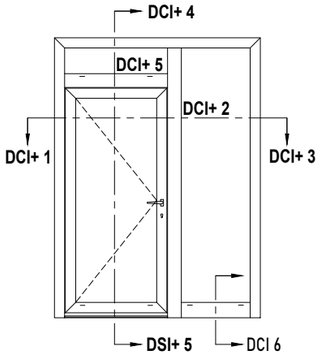

		#
180.9114.SY		(4xb1)
		(2xb2)
		(4xh3)
081.9229.07		4x(60mm)

BESLAG DEUREN > ZIE "HARDWARE CONFIGURATOR"
ACCESSOIRES PORTES > VOIRE "HARDWARE CONFIGURATOR"
DOORS GEAR > SEE "HARDWARE CONFIGURATOR"
TUERENBESCHLAG > SIEHE "HARDWARE CONFIGURATOR

DCI +1

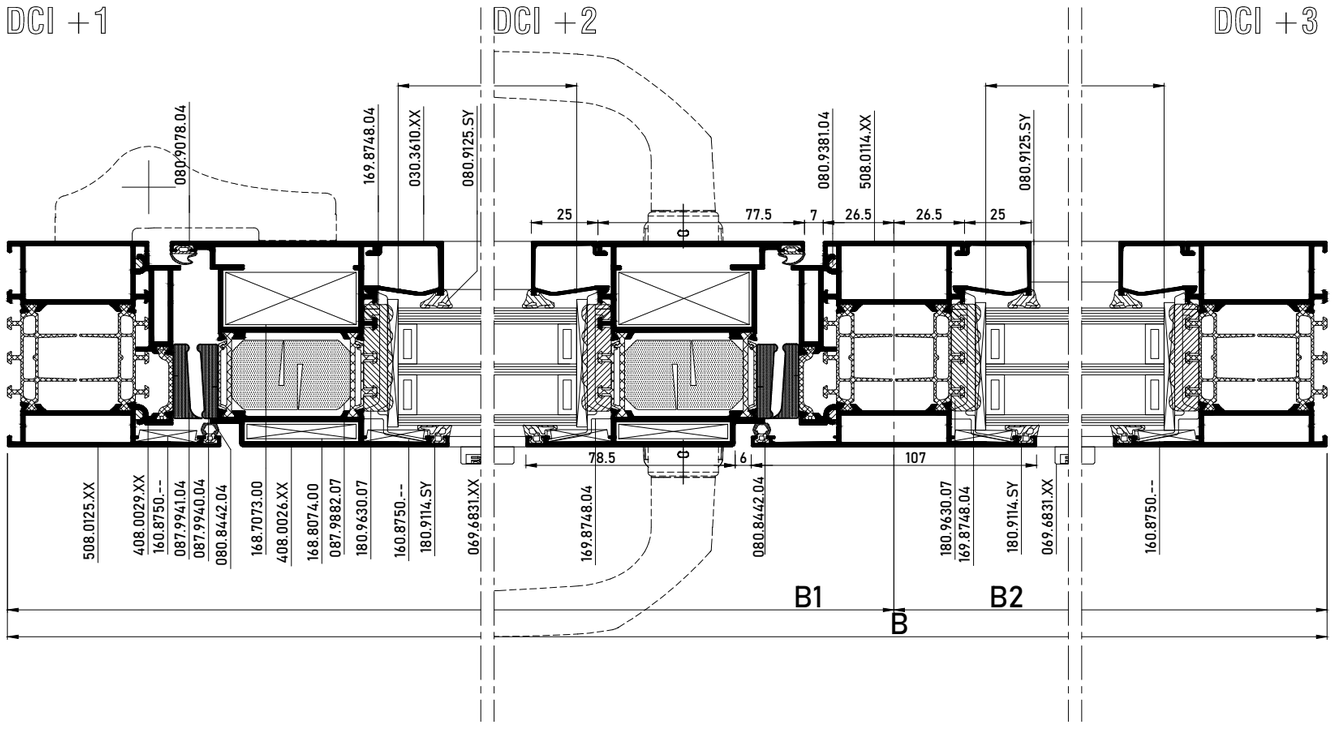

DCI +2

DCI +3

DCI+ 4

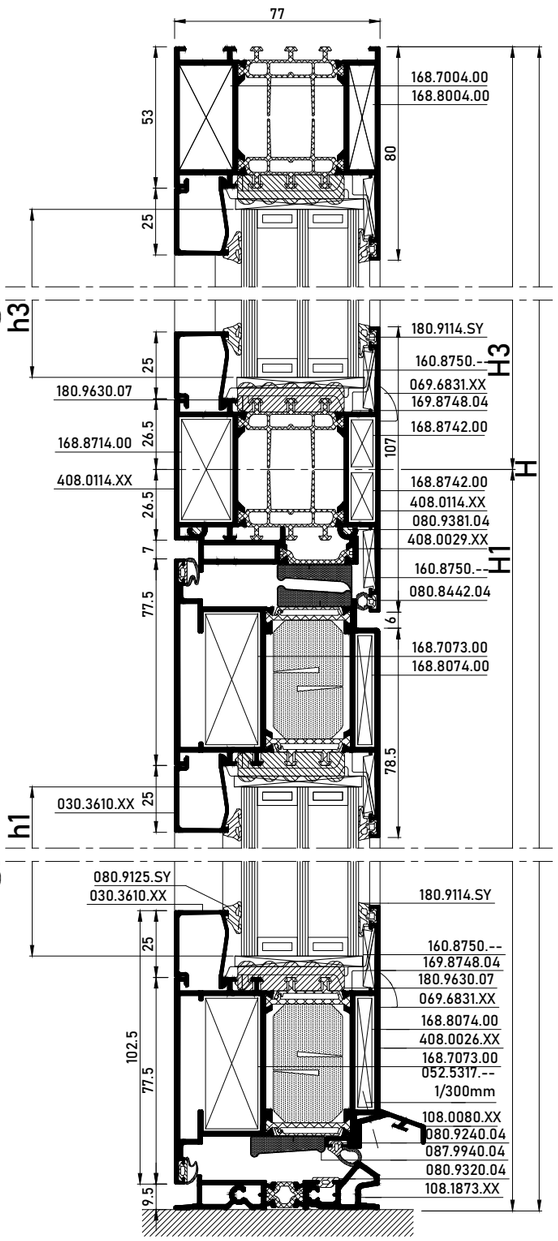

SECTIONS MASTERLINE 8-Fu

DBL. CAS. DOOR HI -> HI+

MASTERLINE 8-Fu

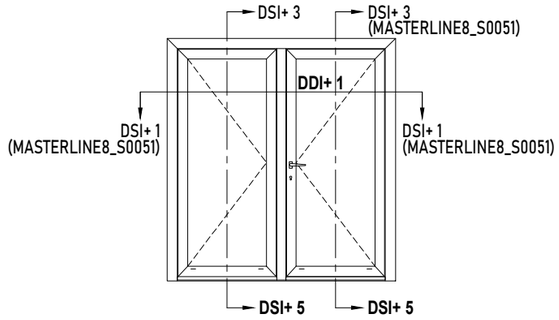

+

087.9940.04	▬	(2xB)
		(3xH)
087.9941.04	▬	B
		(3xH)

		#	Lm
408.0898.XX		1	B
		1	H
		1	H
+			
087.9870.07	▬	1	B
		1	H
		1	H
408.0026.XX		2	B1 - 51.5
		2	B2 - 51.5
		4	H - 58
+			
087.9882.07	▬	2	B1 - 51.5
		2	B2 - 51.5
		4	H - 58
108.1015.XX		1	H - 100
030.3610.XX		2	B1 - 206.5
		2	B2 - 206.5
		4	H - 263
108.0080.XX		1	B1 - 45.5
		1	B2 - 87.5
108.1873.XX		1	B - 143

b1=B1-222.5	
b2=B2-222.5	
h=h-229	

ZIE BEGLAZINGSMETHODE
VOIR METHODE DE VITRAGE
SEE GLAZING METHOD
SIEHE VERGLASUNGSWEISE

	#
168.7071.00	2
168.8072.00	2
168.7073.00	6
168.8074.00	8
168.7088.00	2
160.8750.--	8
069.8515.04	1
052.5312.--	1
069.6831.XX	PROD STEPS
169.8748.04	PROD STEPS
052.5316.--	4
069.8360.04	1
052.5313.--	4
052.5316.--	4
069.8426.04	4
052.5316.--	8
069.8373.04	2
052.5317.--	1/300mm
052.5318.--	1/300mm
080.9381.04	(2xh)
080.9320.04	B
080.9078.04	(3xB)+(6xH)
080.9091.04	6
080.9240.04	PROD STEPS
080.9125.SY	(2xb1)+(2xb2)
	+(4xh)
180.9114.SY	(2xb1)+(2xb2)
	+(4xh)
180.9630.07	(2xb1)+(2xb2)
	+(4xh)
081.9229.07	2x(60.5mm)

BESLAG DEUREN > ZIE "HARDWARE CONFIGURATOR"
ACCESSOIRES PORTES > VOIRE "HARDWARE CONFIGURATOR"
DOORS GEAR > SEE "HARDWARE CONFIGURATOR"
TUERENBESCHLAG > SIEHE "HARDWARE CONFIGURATOR

DDI+ 1

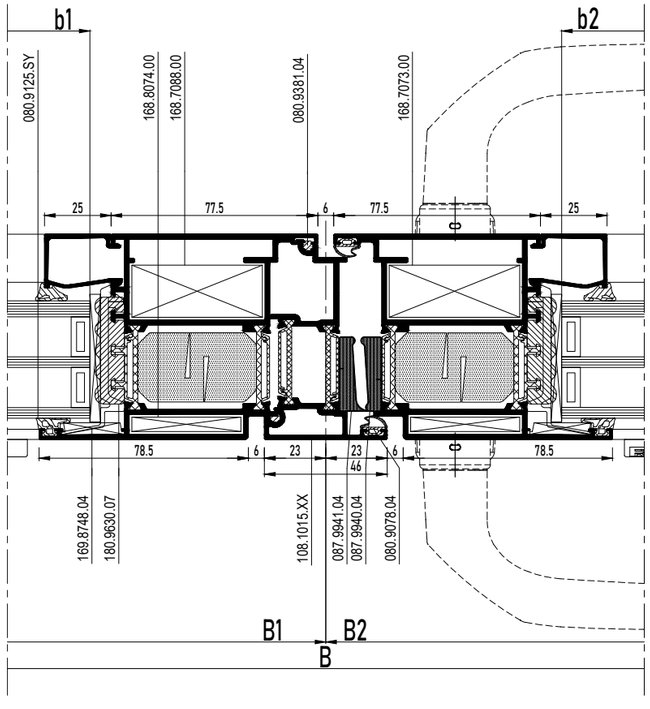

DSI+ 5

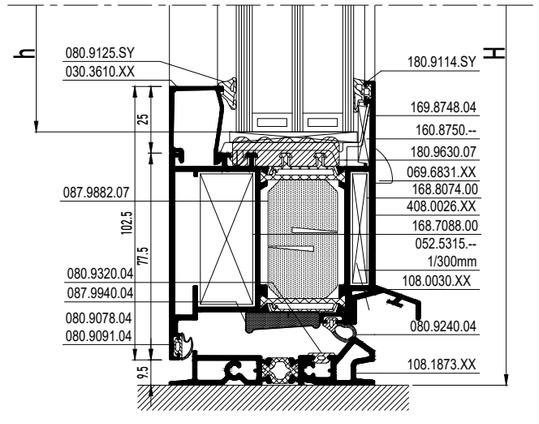

SECTIONS MASTERLINE 8-Fu

Z-T DOOR HI -> HI+

MASTERLINE 8-Fu

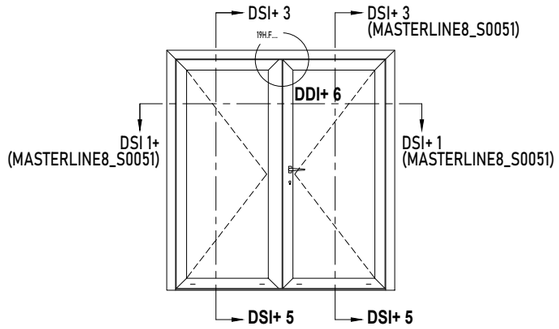

			#	Lm
408.0898.XX			1	B
			1	H
			1	H
+				
087.9870.07			1	B
			1	H
			1	H
408.0026.XX			2	B1 - 38.5
			2	B2 - 38.5
			1	H - 58
			2	H - 58
+				
087.9882.07			2	B1 - 38.5
			2	B2 - 38.5
			1	H - 58
			2	H - 58
408.0014.XX			1	H - 58
+				
087.9882.07			1	H - 58
030.3610.XX			2	B1 - 193.5
			2	B2 - 193.5
			4	H - 263
108.0080.XX			1	B1 - 58.5
			1	B2 - 74.5
108.1873.XX			1	B-143

b1=B1-209.5
b2=B2-209.5
h=h-229

50mm ZIE BEGLAZINGSMETHODE
VOIR METHODE DE VITRAGE
SEE GLAZING METHOD
SIEHE VERGLASUNGSWEISE

		#
168.7071.00		2
168.8072.00		2
168.7073.00		6
168.8074.00		8
168.7088.00		2
160.8750.--		8
069.8511.04		1
069.8512.04		1
069.6831.XX		19H.F. ...
169.8748.04		19H.F. ...
069.8360.04		1
052.5313.--		4
052.5316.--		4
069.8426.04		4
052.5316.--		8
069.8373.04		2
080.9078.04		(3xB)+(6xH)
080.9091.04		6
052.5317.--		1/300mm
052.5316.--		4
080.9320.04		B
080.9240.04		19H.F. ...
080.9125.SY		(2xb1)+(2xb2)
		+(4xh)
180.9114.SY		(2xb1)+(2xb2)
		+(4xh)
180.9630.07		(2xb1)+(2xb2)
		+(4xh)
081.9229.07		2x(60.5mm)
+		
087.9940.04		(2xB)
		(3xH)
087.9941.04		B
		(3xH)

BESLAG DEUREN > ZIE "HARDWARE CONFIGURATOR
ACCESSOIRES PORTES > VOIRE "HARDWARE CONFIGURATOR
DOORS GEAR > SEE "HARDWARE CONFIGURATOR"
TUERENBESCHLAG > SIEHE "HARDWARE CONFIGURATOR"

DDI+ 6

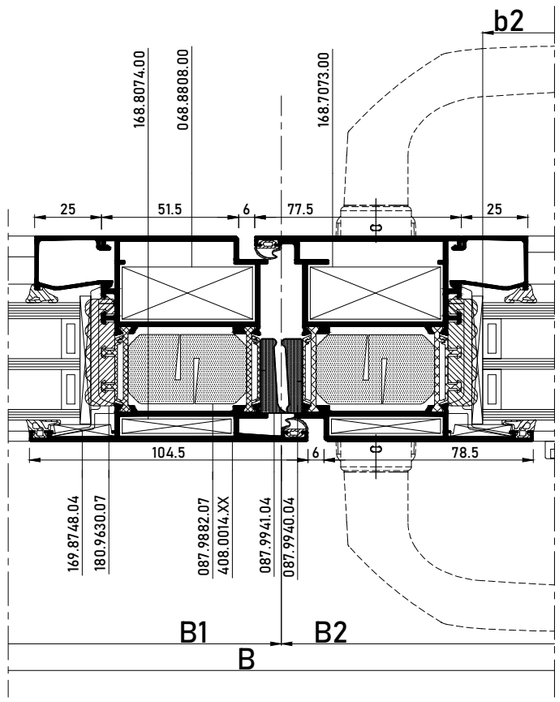

DSI+ 5

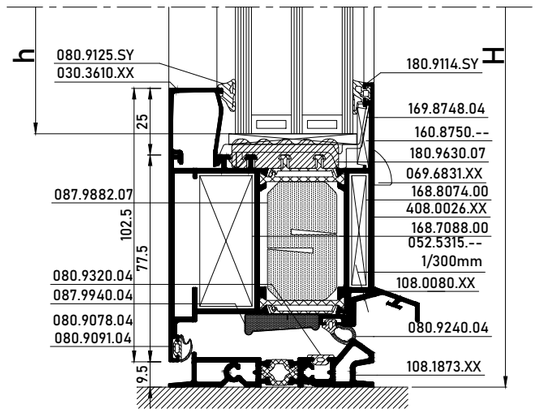

SECTIONS MASTERLINE 8-Fu

DOOR RC2

MASTERLINE 8-Fu

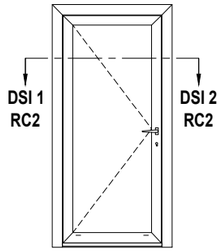

			#	Lm
408.0898.XX			1	B
			1	H
			1	H
408.0026.XX			2	B-97
			2	H-58.5
030.3610.XX			2	B-252
			2	H-263.5
108.0030.XX			1	B - 139

130.3650.XX			2	B-252
			2	H-263.5

		#
168.7071.00		2
168.8072.00		2
168.7073.00		4
168.8074.00		4
160.8750.--		4
169.8748.04		PROD STEPS
052.5315.--		1/300mm
069.6831.XX		19H.F. ...
169.8513.04		1
052.5316.--		4
069.8426.04		2
052.5316.--		4
080.9078.04		,2xB + 4xH
080.9091.04		2
080.9125.SY		2xb + 2xh
180.9114.SY		2xb + 2xh
180.9630.07		2xb + 2xh
081.9236.04		4 x (60.5mm)
081.9141.04		PROD STEPS
081.9092.04		2 x (60.5mm)

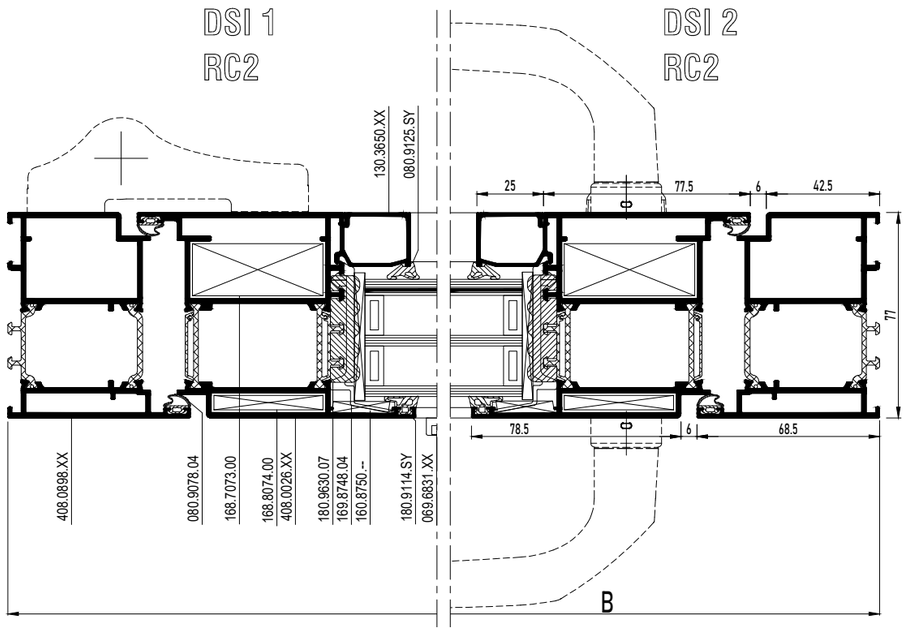

b = B - 268

h= H - 229.5

ZIE BEGLAZINGSMETHODE
VOIR METHODE DE VITRAGE
SEE GLAZING METHOD
SIEHE VERGLASUNGSWEISE

BESLAG DEUREN > ZIE "HARDWARE CONFIGURATOR"
ACCESSOIRES PORTES > VOIRE "HARDWARE CONFIGURATOR
DOORS GEAR > SEE "HARDWARE CONFIGURATOR"
TUERENBESCHLAG > SIEHE "HARDWARE CONFIGURATOR"

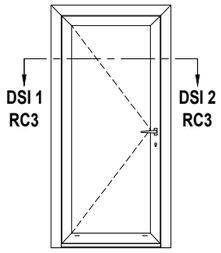

DSI 1
RC3

DSI 2
RC3

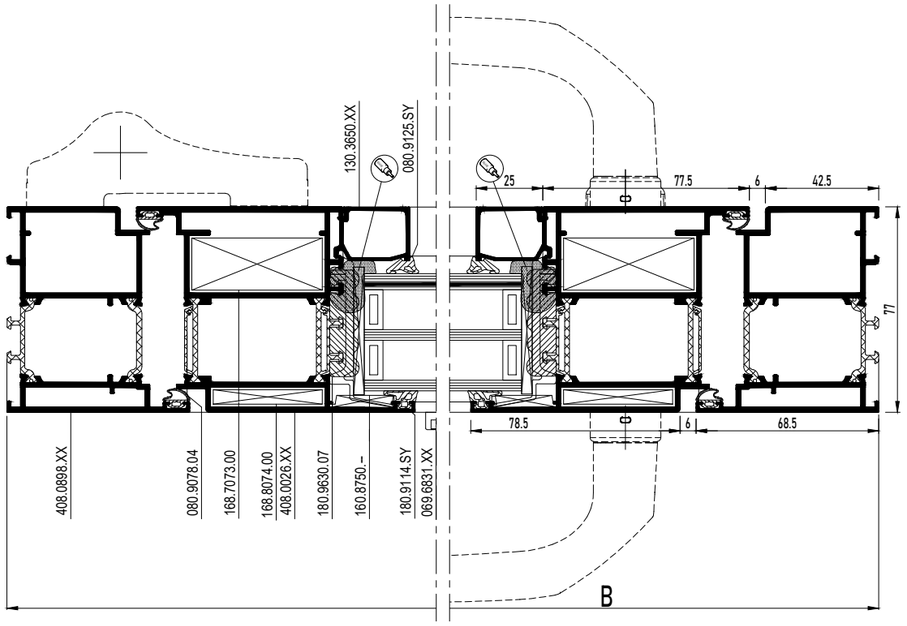

			#	Lm
408.0898.XX			1	B
			1	H
			1	H
408.0026.XX			2	B - 97
			2	H - 58.5
030.3610.XX			2	B - 252
			2	H - 263.5
108.0030.XX			1	B - 139

130.3650.XX		2 / B - 252
		2 / H - 263.5

		#
168.7071.00		2
168.8072.00		2
168.7073.00		4
168.8074.00		4
160.8750.--		4
169.8748.04		PROD STEPS
052.5315.--		1/300mm
069.6831.XX		PROD STEPS
169.8513.04		1
052.5316.--		4
069.8426.04		2
052.5316.--		4
080.9078.04		(2xB)+(4xH)
080.9091.04		2
080.9125.SY		(2xb)+(2xh)
180.9114.SY		(2xb)+(2xh)
180.9630.07		(2xb)+(2xh)
081.9236.04		4 x (60.5mm)
081.9141.04		PROD STEPS
081.9092.04		2 x (60.5mm)

b = B - 268
h= H - 229.5

≥ 50mm
ZIE BEGLAZINGSMETHODE
VOIR METHODE DE VITRAGE
SEE GLAZING METHOD
SIEHE VERGLASUNGSWEISE

BESLAG DEUREN > ZIE "HARDWARE CONFIGURATOR
ACCESSOIRES PORTES > VOIRE "HARDWARE CONFIGURATOR"
DOORS GEAR > SEE "HARDWARE CONFIGURATOR"
TUERENBESCHLAG > SIEHE "HARDWARE CONFIGURATOR"

SECTIONS MASTERLINE 8-Fu

DOOR HID

MASTERLINE 8-Fu

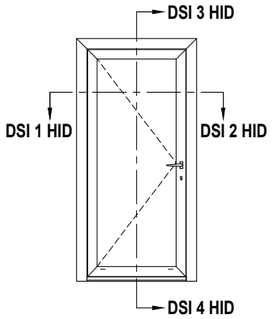

			#	Lm
408.0898.XX			1	B
			1	H
			1	H
408.0026.XX			2	B-97
			2	H-58.5
030.3610.XX			2	B-252
			2	H-263.5
108.0030.XX			1	B - 139

130.3650.XX		2	B-252
		2	H-263.5

		#
168.7071.00		2
168.8072.00		2
168.7073.00		4
168.8074.00		4
160.8750.--		4
169.8748.04		4
052.5315.--		1/300mm
069.6831.XX		PROD STEPS
169.8513.04		1
052.5316.--		4
069.8426.04		2
052.5316.--		4
080.9078.04		,2xB + 4xH
080.9091.04		2
080.9125.SY		2xb + 2xh
180.9114.SY		2xb + 2xh
180.9630.07		2xb + 2xh
081.9236.04		4 x (60.5mm)
081.9141.04		PROD STEPS
081.9092.04		8 x (60.5mm)

169.8718.00		4

b = B - 268
h= H - 229.5

≥ 50mm
ZIE BEGLAZINGSMETHODE
VOIR METHODE DE VITRAGE
SEE GLAZING METHOD
SIEHE VERGLASUNGSWEISE

BESLAG DEUREN > ZIE "HARDWARE CONFIGURATOR"
ACCESSOIRES PORTES > VOIRE "HARDWARE CONFIGURATOR"
DOORS GEAR > SEE "HARDWARE CONFIGURATOR"
TUERENBESCHLAG > SIEHE "HARDWARE CONFIGURATOR"

	PRIVATE PLAATSEN LIEUX PRIVATS PRIVATE APPLICATION PRIVATANWENDUNG	PUBLIEKE PLAATSEN LIEUX PUBLICS PUBLIC APPLICATION OFFENLICHE ANWENDUNG
FG < 200 kg	standard glass support NR. 169.8748.04	HID glass support NR. 169.8718.00
200 kg < FG < 250 kg	HID glass support NR. 169.8718.00	HID glass support NR. 169.8718.00

DSI 3 HID

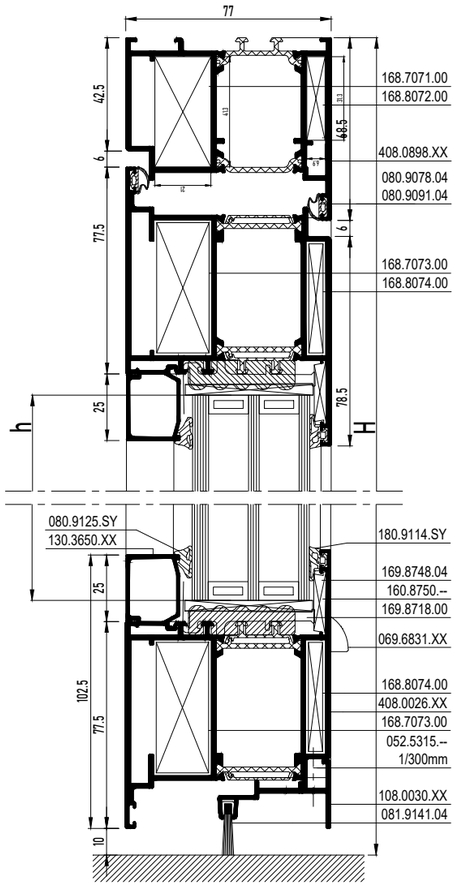

DSI 1 HID

DSI 2 HID

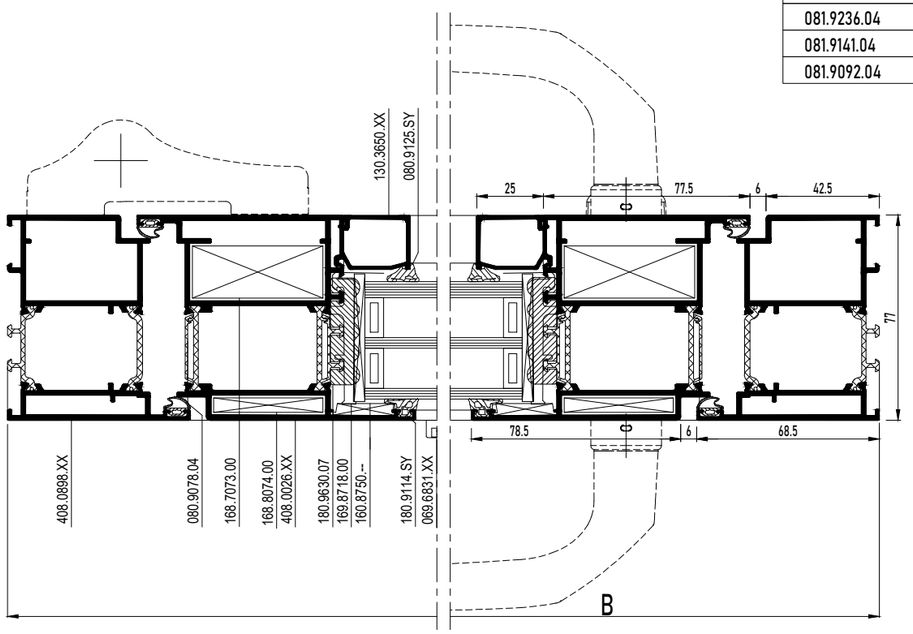

DSI 4 HID

SECTIONS MASTERLINE 8-Fu

DOOR WITH BRUSH FLOOR PROFILE

MASTERLINE 8-Fu

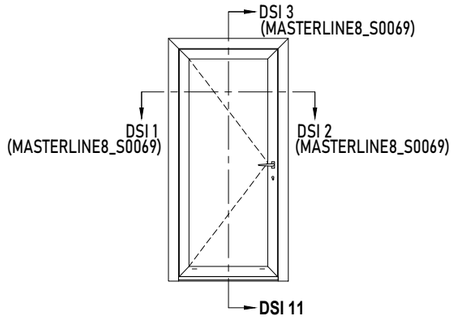

			#	Lm
408.0898.XX			1	B
			1	H
			1	H
408.0026.XX			2	B-97
			2	H-58.5
030.3610.XX			2	B-252
			2	H-263.5
108.0030.XX			1	B - 139
408.0026.XX			2	B-97
			2	H-(58.5+4.5)
030.3610.XX			2	B-252
			2	H-(263.5+4.5)
+				
408.0071.XX			1	B - 121

		#
168.7071.00		2
168.8072.00		2
168.7073.00		4
168.8074.00		4
160.8750.--		4
169.8748.04		PROD STEPS
052.5315.--		1/300mm
069.6831.XX		PROD STEPS
169.8513.04		1
052.5316.--		4
069.8426.04		2
052.5316.--		4
080.9078.04		3xB + 4xH
080.9091.04		2
080.9125.SY		2xb + 2xh
180.9114.SY		2xb + 2xh
180.9630.07		2xb + 2xh
081.9236.04		4 x (60.5mm)
081.9141.04		PROD STEPS
081.9092.04		2 x (60.5mm)

b=B-268
h=H-229.5

b=B-268
h=H-(229.5+4.5)

≥ 50mm
ZIE BEGLAZINGSMETHODE
VOIR METHODE DE VITRAGE
SEE GLAZING METHOD
SIEHE VERGLASUNGSWEISE

BESLAG DEUREN > ZIE "HARDWARE CONFIGURATOR
ACCESSOIRES PORTES > VOIRE "HARDWARE CONFIGURATOR"
DOORS GEAR > SEE "HARDWARE CONFIGURATOR
TUERENBESCHLAG > SIEHE "HARDWARE CONFIGURATOR"

DSI 11

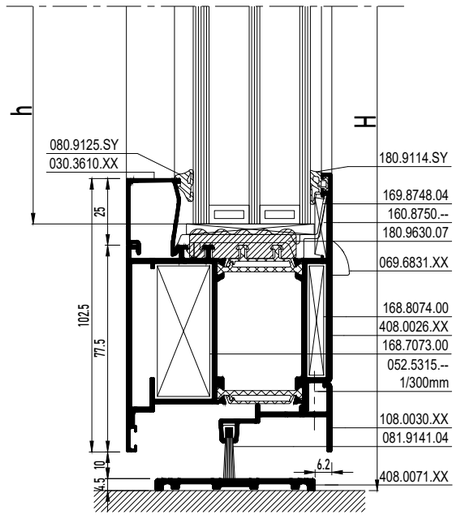

SECTIONS MASTERLINE 8-Fu

DOOR INWARD OPENING WITH DOUBLE WEATHER STRIP

MASTERLINE 8-Fu

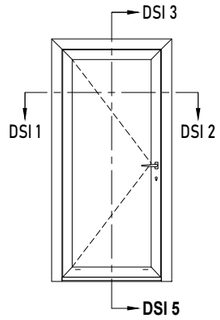

			#	Lm
408.0898.XX			1	B
			1	H
			1	H
408.0026.XX			2	B-97
			2	H-58
030.3610.XX			2	B-252
			2	H-263
108.1873.XX			1	B - 143
108.0080.XX			1	B - 133

b = B - 268
h = H - 229

ZIE BEGLAZINGSMETHODE
VOIR METHODE DE VITRAGE
SEE GLAZING METHOD
SIEHE VERGLASUNGSWEISE

BESLAG DEUREN > ZIE "HARDWARE CONFIGURATOR"
ACCESSOIRES PORTES > VOIRE "HARDWARE CONFIGURATOR"
DOORS GEAR > SEE "HARDWARE CONFIGURATOR"
TUERENBESCHLAG > SIEHE "HARDWARE CONFIGURATOR"

		#
168.7071.00		2
168.8072.00		2
168.7073.00		4
168.8074.00		4
160.8750.--		4
169.8748.04		PROD STEPS
052.5317.--		1/300mm
052.5316.--		2
069.6831.XX		PROD STEPS
069.8360.04		1
052.5313.--		4
052.5316.--		4
069.8426.04		2
052.5316.--		4
069.8373.04		1
080.9078.04		3xB + 4xH
080.9091.04		4
080.9320.04		B
080.9240.04		PROD STEPS
080.9125.SY		2xb + 2xh
180.9114.SY		2xb + 2xh
180.9630.07		2xb + 2xh
069.8427.04		4

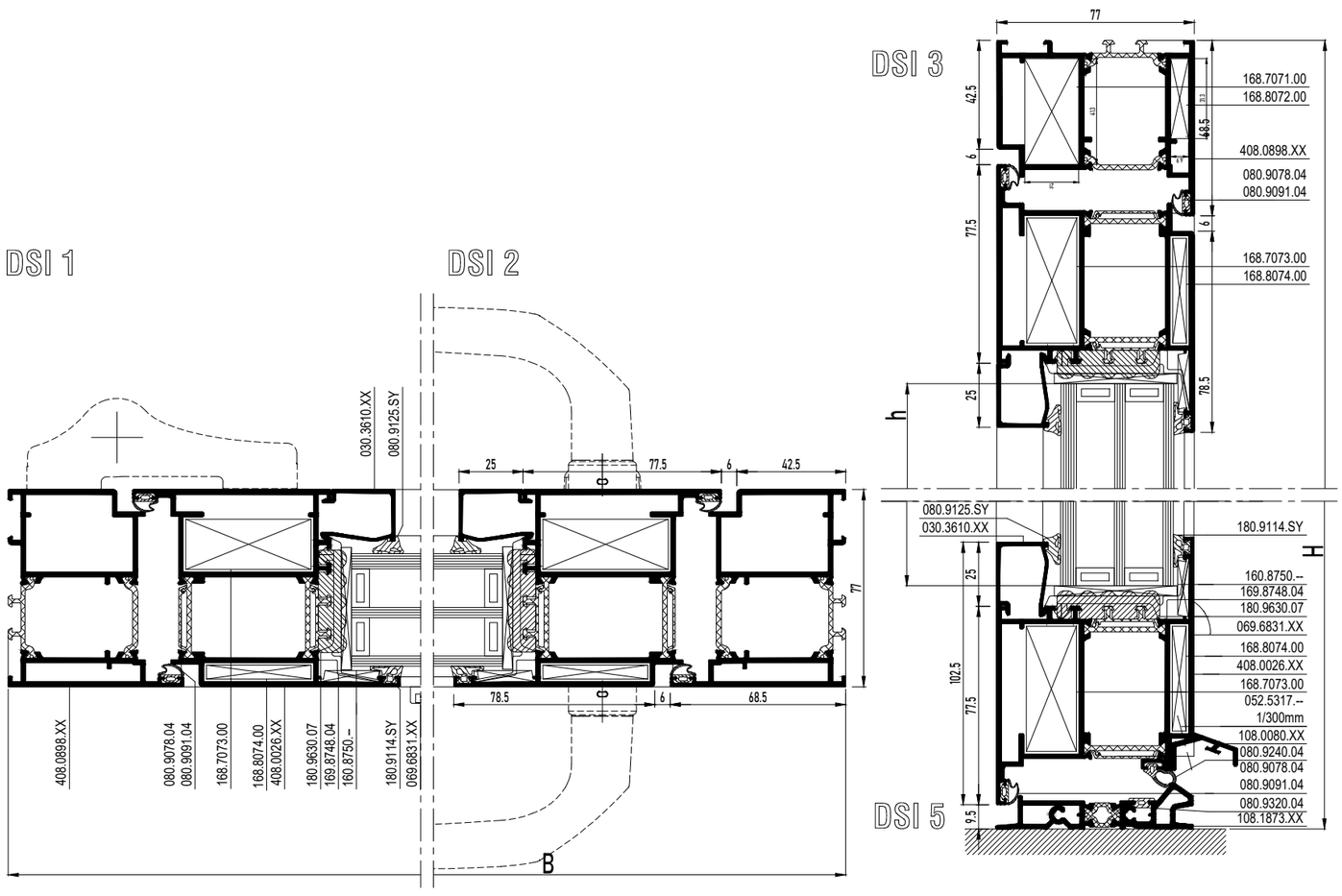

SECTIONS MASTERLINE 8-Fu

DOOR INWARD OPENING WITH DOUBLE WEATHER STRIP - BOTTOM DOOR RAIL

MASTERLINE 8-Fu

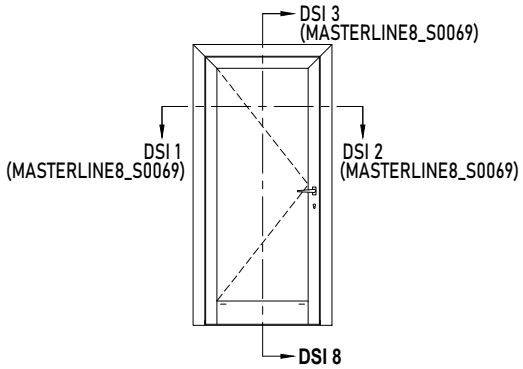

DSI 8

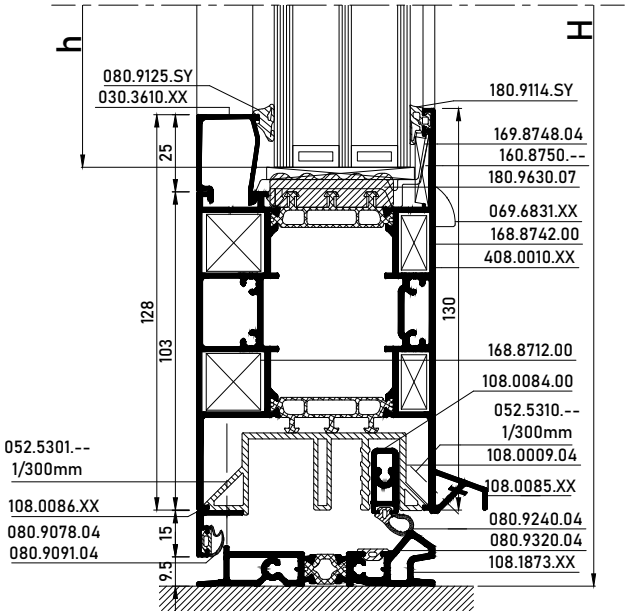

			#	Lm
408.0898.XX			1	B
			1	H
			1	H
408.0026.XX			1	B - 97
			1	H - 73
			1	H - 73
408.0010.XX			1	B - 252
030.3610.XX			2	B - 252
			2	H - 303.5
108.0085.XX			1	B - 149
108.0009.04			1	B - 252
108.0084.XX			1	B - 133
108.0086.XX			1	B - 97
108.1873.XX			1	B - 143

b = B - 268
h = H - 269.5

50mm
ZIE BEGLAZINGSMETHODE
VOIR METHODE DE VITRAGE
SEE GLAZING METHOD
SIEHE VERGLASUNGSWEISE

BESLAG DEUREN > ZIE "OPENING DOORS"
ACCESSOIRES PORTES > VOIRE "OPENING DOORS"
DOORS GEAR > SEE "OPENING DOORS"
TUERENBESCHLAG > SIEHE "OPENING DOORS"

		#
168.7071.00		2
168.8072.00		2
168.7073.00		2
168.8074.00		2
160.8750.--		2
168.8712.00		4
168.5000.00		8
160.8750.--		2
168.8742.00		4
168.5012.--		2
169.8748.04		19H.F. ...
052.5317.--		1/300mm
052.5301.--		1/300mm
052.5316.--		2
069.6831.XX		19H.F. ...
069.8360.04		1
052.5313.--		4
052.5316.--		4
069.8426.04		2
052.5316.--		4
069.8373.04		1
080.9078.04		3xB + 4xH
080.9091.04		4
080.9320.04		B
080.9240.04		19H.F. ...
080.9125.SY		2xb + 2xh
180.9114.SY		2xb + 2xh
180.9630.07		2xb + 2xh
168.8688.04		4
069.8427.04		4

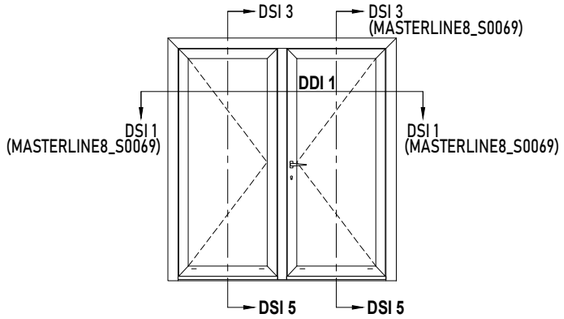

DDI 1

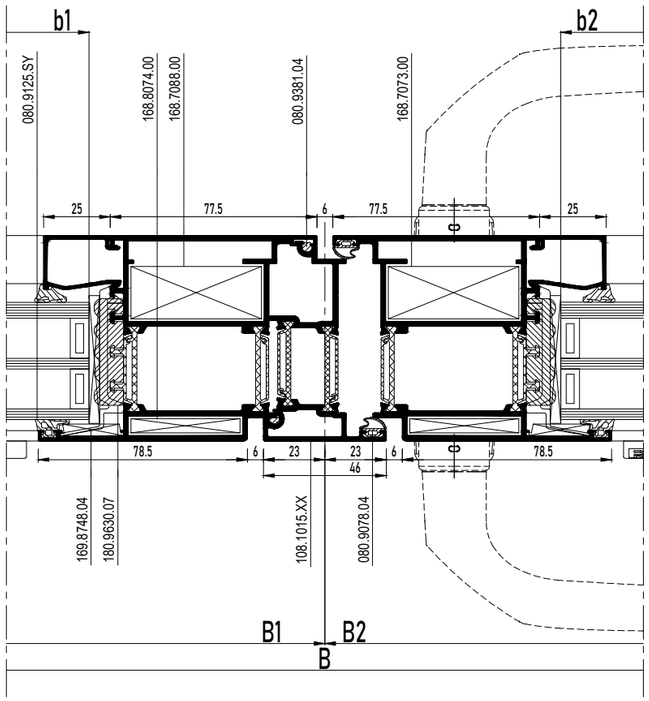

			#	Lm
408.0898.XX			1	B
			1	H
			1	H
408.0026.XX			2	B1 - 51.5
			2	B2 - 51.5
			4	H - 58
108.1015.XX			1	H - 100
030.3610.XX			2	B1 - 206.5
			2	B2 - 206.5
			4	H - 263
108.0080.XX			1	B1 - 45.5
			1	B2 - 87.5
108.1873.XX			1	B - 143

b1 = B1 - 222.5
b2 = B2 - 222.5
h = h - 229

ZIE BEGLAZINGSMETHODE
VOIR METHODE DE VITRAGE
SEE GLAZING METHOD
SIEHE VERGLASUNGSWEISE
≥ 50mm

BESLAG DEUREN > ZIE "HARDWARE CONFIGURATOR"
ACCESSOIRES PORTES > VOIRE "HARDWARE CONFIGURATOR"
DOORS GEAR > SEE "HARDWARE CONFIGURATOR"
TUERENBESCHLAG > SIEHE "HARDWARE CONFIGURATOR"

DSI 5

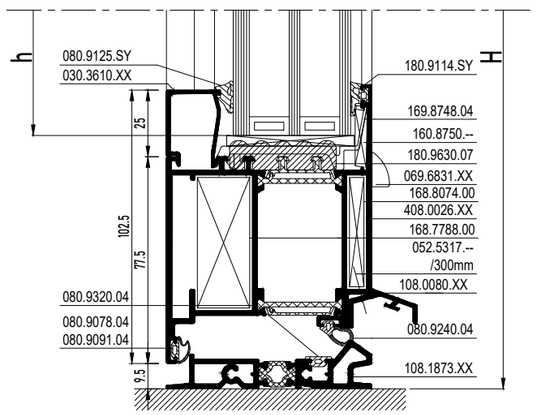

	#
168.7071.00	2
168.8072.00	2
168.7073.00	6
168.8074.00	8
168.7088.00	2
160.8750.--	8
069.8515.04	1
052.5312.--	1
069.6831.XX	PROD STEPS
169.8748.04	PROD STEPS
052.5316.--	4
069.8360.04	1
052.5313.--	4
052.5316.--	4
069.8426.04	4
052.5316.--	8
069.8373.04	2
052.5317.--	1/300mm
052.5318.--	1/300mm
080.9381.04	(2xh)
080.9320.04	B
080.9078.04	(3xB)+(6xH)
080.9091.04	6
080.9240.04	PROD STEPS
080.9125.SY	(2xb1)+(2xb2)
	+(4xh)
180.9114.SY	(2xb1)+(2xb2)
	+(4xh)
180.9630.07	(2xb1)+(2xb2)
	+(4xh)
081.9229.07	2x(60.5mm)
069.8427.04	4

SECTIONS MASTERLINE 8-Fu

DOUBLE CASEMENT DOOR INWARD OPEN. WITH DOUBLE WEATHER STRIP - BOTTOM DOOR RAIL

MASTERLINE 8-Fu

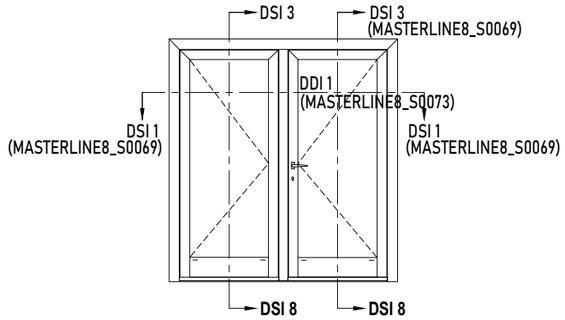

DDI 8

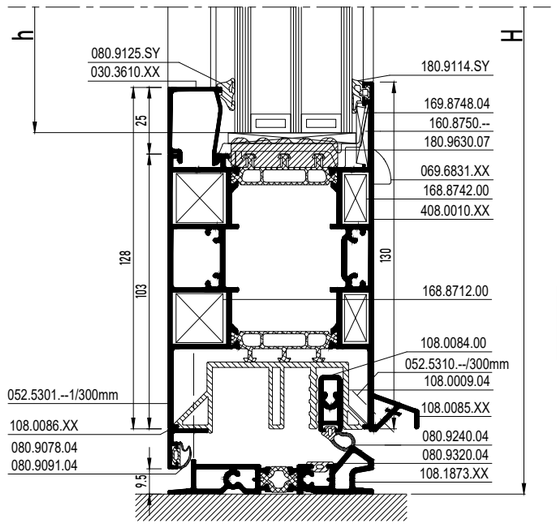

b1 = B1-222.5
b2 = B2-222.5
h = H-269.5



			#	Lm
408.0898.XX			1	B
			1	H
			1	H
408.0026.XX			1	B1 - 51.5
			1	B2 - 51.5
			2	H - 73
			2	H - 73
408.0010.XX			2	B1 - 206.5
108.1015.XX			1	H - 94
030.3610.XX			2	B1 - 206.5
			2	B2 - 206.5
			4	H -303.6
108.0085.XX			1	B1 - 51.5
			1	B2 - 103.5
108.1873.XX			1	B-143
108.0009.04			1	B1 - 206.5
			1	B2 - 206.5
108.0084.00			1	B1 - 61.5
			1	B2 - 87.5
108.0086.00			1	B1 - 46.5
			1	B2 - 51.5

BESLAG DEUREN > ZIE "OPENING DOORS"
ACCESSOIRES PORTES > VOIRE "OPENING DOORS"
DOORS GEAR > SEE "OPENING DOORS"
TUERENBESCHLAG > SIEHE "OPENING DOORS"

		#
081.9229.07		2x(60.5mm)
069.8427.04		4

		#
168.7071.00		2
168.8072.00		2
168.7073.00		6
168.8074.00		8
168.7088.00		2
168.8712.00		8
168.5000.00		16
160.8750.--		4
168.8742.00		8
168.5012.--		4
069.8515.04		1
052.5312.--		1
069.6831.XX		19H.F. ...
169.8748.04		19H.F. ...
052.5316.--		4
069.8360.04		1
052.5313.--		4
052.5316.--		4
069.8426.04		4
052.5316.--		8
069.8373.04		2
052.5317.--		1/300mm
052.5318.--		1/300mm
052.5301.--		1/300mm
080.9381.04		(2xh)
080.9320.04		B
080.9078.04		(3xB)+(6xH)
080.9091.04		6
080.9240.04		19H.F. ...
080.9125.SY		(2xb1)+(2xb2)
		+(4xh)
180.9114.SY		(2xb1)+(2xb2)
		+(4xh)
180.9630.07		(2xb1)+(2xb2)
		+(4xh)

SECTIONS MASTERLINE 8-Fu

Z-T DOOR INWARD OPENING WITH DOUBLE WEATHER STRIP

MASTERLINE 8-Fu

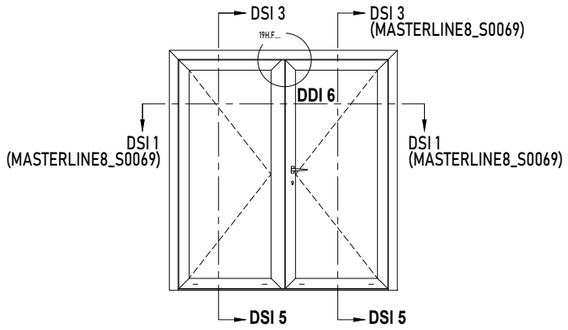

			#	Lm
408.0898.XX			1	B
			1	H
			1	H
408.0026.XX			2	B1 - 38.5
			2	B2 - 38.5
			1	H - 58
			2	H - 58
408.0014.XX			1	H - 58
030.3610.XX			2	B1 - 193.5
			2	B2 - 193.5
			4	H - 263
108.0080.XX			1	B1 - 58.5
			1	B2 - 74.5
108.1873.XX			1	B-143

b1 = B1 - 209.5
b2 = B2 - 209.5
h = h - 229

ZIE BEGLAZINGSMETHODE
VOIR METHODE DE VITRAGE
SEE GLAZING METHOD
SIEHE VERGLASUNGSWEISE

BESLAG DEUREN > ZIE "HARDWARE CONFIGURATOR"
ACCESSOIRES PORTES > VOIRE "HARDWARE CONFIGURATOR"
DOORS GEAR > SEE "HARDWARE CONFIGURATOR"
TUERENBESCHLAG > SIEHE "HARDWARE CONFIGURATOR"

		#
168.7071.00		2
168.8072.00		2
168.7073.00		6
168.8074.00		8
168.7088.00		2
160.8750.--		8
069.8511.04		1
069.8512.04		1
069.6831.XX		PROD STEPS
169.8748.04		PROD STEPS
069.8360.04		1
052.5313.--		4
052.5316.--		4
069.8426.04		4
052.5316.--		8
069.8373.04		2
080.9078.04		(3xB)+(6xH)
080.9091.04		6
052.5317.--		1/300mm
052.5316.--		4
080.9320.04		B
080.9240.04		PROD STEPS
080.9125.SY		(2xb1)+(2xb2)
		+(4xh)
180.9114.SY		(2xb1)+(2xb2)
		+(4xh)
180.9630.07		(2xb1)+(2xb2)
		+(4xh)
081.9229.07		2x(60.5mm)
069.8427.04		2

DDI 6

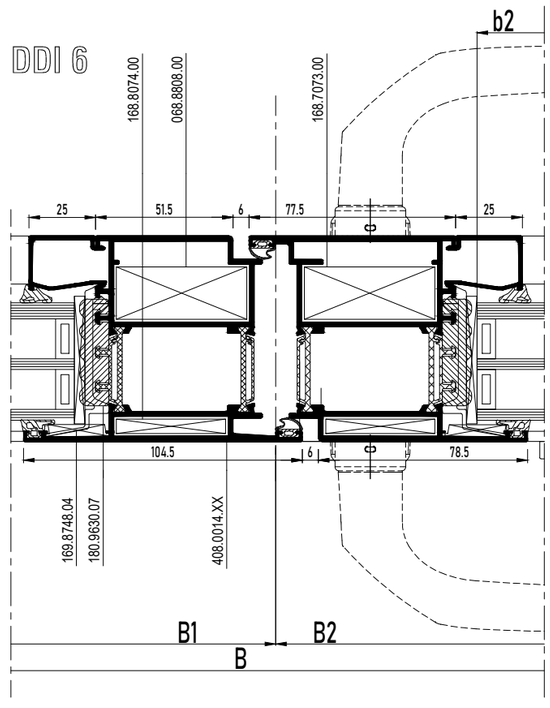

DSI 5

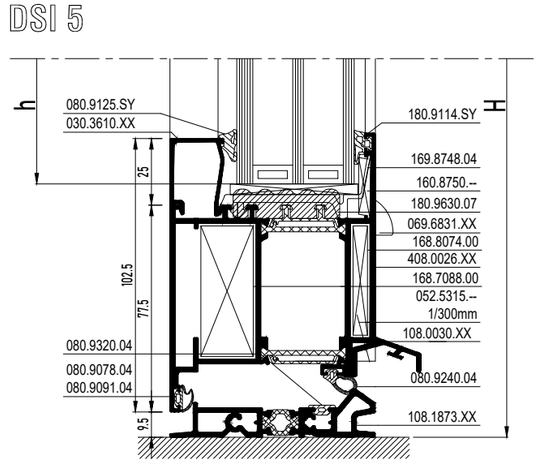

SECTIONS MASTERLINE 8-Fu

Z-T DOOR INWARD OPENING WITH DOUBLE WEATHER STRIP - BOTTOM DOOR RAIL

MASTERLINE 8-Fu

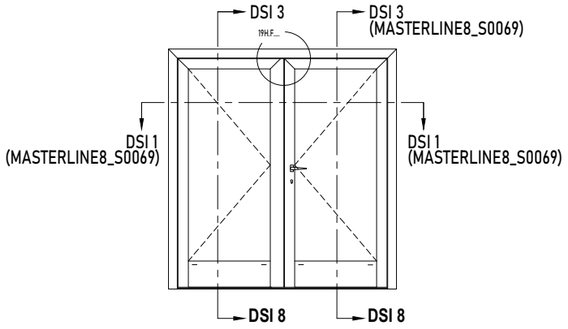

b1 = B1 - 209.5
b2 = B2 - 209.5
h = H - 269.5



			#	Lm
408.0898.XX			1	B
			1	H
			1	H
408.0026.XX			1	B1 - 38.5
			1	B2 - 38.5
			1	H - 73
			2	H - 73
408.0014.XX			1	H - 73
408.0010.XX			2	B1 - 193.5
030.3610.XX			2	B1 - 193.5
			2	B2 - 193.5
			4	H - 303.6
108.0085.XX			1	B1 - 90.5
			1	B2 - 64.5
108.0086.00			1	B1 - 59.5
			1	B2 - 38.5
108.1873.XX			1	B - 143
108.0009.04			1	B1 - 193.5
			1	B2 - 193.5
108.0084.00			1	B1 - 74.5
			1	B2 - 74.5

BESLAG DEUREN > ZIE "OPENING DOORS"
ACCESSOIRES PORTES > VOIRE "OPENING DOORS"
DOORS GEAR > SEE "OPENING DOORS"
TUERENBESCHLAG > SIEHE "OPENING DOORS"

		#
168.7071.00		2
168.8072.00		2
168.7073.00		6
168.8074.00		8
168.7088.00		2
168.8712.00		8
168.5000.00		16
160.8750.--		4
168.8742.00		8
168.5012.--		4
160.8750.--		8
069.8511.04		1
069.8512.04		1
069.6831.XX		19H.F. ...
169.8748.04		19H.F. ...
069.8360.04		1
052.5313.--		4
052.5316.--		4
069.8426.04		4
052.5316.--		8
081.9229.07		2x(60.5mm)
069.8373.04		2
080.9078.04		(3xB)+(6xH)
080.9091.04		9
052.5317.--		1/300mm
052.5316.--		4
052.5301.--		1/300mm
080.9320.04		B
080.9240.04		19H.F. ...
080.9125.SY		(2xb1)+(2xb2) +(4xh)
180.9114.SY		(2xb1)+(2xb2) +(4xh)
180.9630.07		(2xb1)+(2xb2) +(4xh)
069.8427.04		4

DDI 8

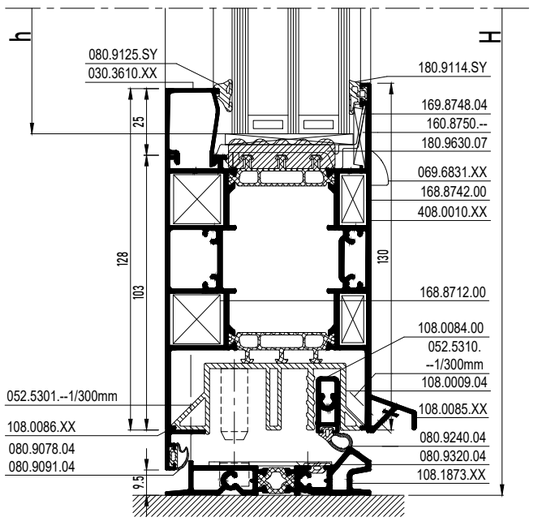

SECTIONS MASTERLINE 8-Fu

COMBINED DOOR INWARD OPENING WITH DOUBLE WEATHER STRIP

MASTERLINE 8-Fu

b1 = B1 - 265.5
h1 = H1 - 213.5
b2 = B2 - 95.5
h2= H - 155
b3 = B1 - 95.5
h3 = H3 - 95.5

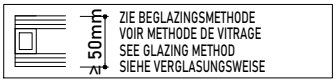

			#	Lm
408.0125.XX			1	B
			1	H
			1	H
408.0026.XX			2	B1 - 93.5
			2	H1 - 43
408.0029.XX			1	B1 - 69.5
			1	H1 - 21.5
			1	H1 - 21.5
408.0114.XX			1	B1 - 79.5
			1	H - 53
408.1142.XX			1	B2 - 79.5
030.3610.XX			2	B1 - 249.5
			2	H1 - 251.5
			2	B1 - 79.5
			2	H3 - 129.5
			2	B2 - 79.5
			2	H - 189
108.1873.XX			1	B - 139.5
108.0080.XX			1	B - 129.5

BESLAG DEUREN > ZIE "OPENING DOORS"
ACCESSOIRES PORTES > VOIRE "OPENING DOORS"
DOORS GEAR > SEE "OPENING DOORS"
TUERENBESCHLAG > SIEHE "OPENING DOORS"

		#
168.7073.00		4
168.8074.00		4
168.7004.00		2
168.8004.00		2
160.8750.--		14
168.8714.00		3
168.5000.00		6
168.8712.00		4
168.5000.00		8
168.8688.04		10
169.8748.04		19H.F. ...
069.6831.XX		19H.F. ...
069.8426.04		2
052.5316.--		4
069.8373.04		1
187.1142.07		B2 - 79.5
168.8742.00		10
168.5012.--		7
052.5327.--		1/300mm
052.5317.--		1/300mm
069.8360.04		1
052.5313.--		4
052.5316.--		4
080.9078.04		B1+(2xH1)
080.9091.04		4
080.9381.04		(2xB1)+(4xH1)
080.9125.SY		(2xb1)+(2xh1)
		(2xb2)+(2xh2)
		(2xb3)+(2xh3)
180.9630.07		(4xb1)
		(2xb2)
		(4xh3)
080.8442.04		B1+(2xH1)

		#
180.9114.SY		(4xb1)
		(2xb2)
		(4xh3)
069.8427.04		4

SECTIONS MASTERLINE 8-Fu

COMBINED DOOR INWARD OPENING WITH DOUBLE WEATHER STRIP

MASTERLINE 8-Fu

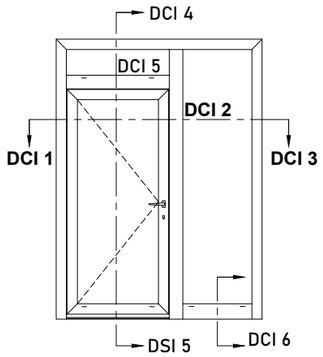

DCI 1

DCI 2

DCI 3

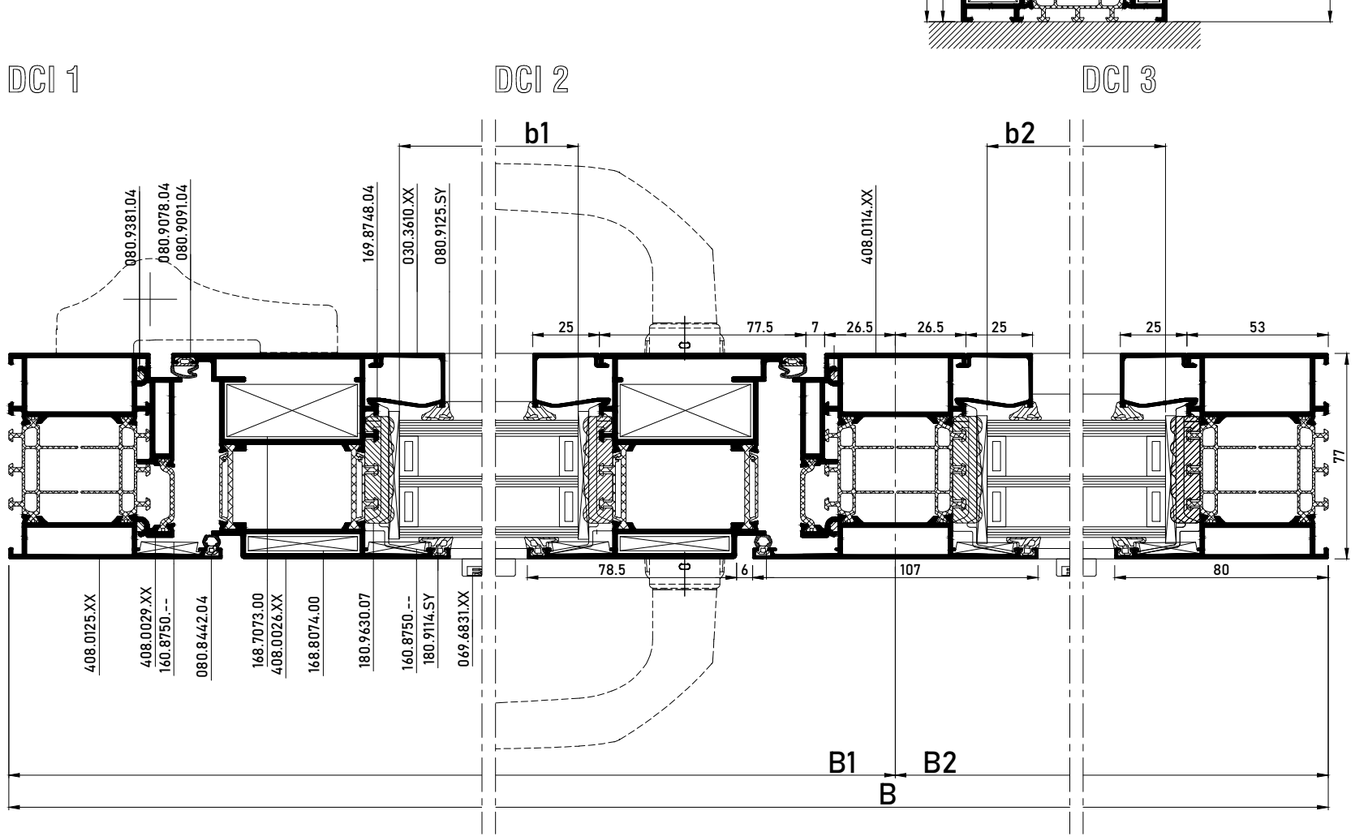

DCI 6

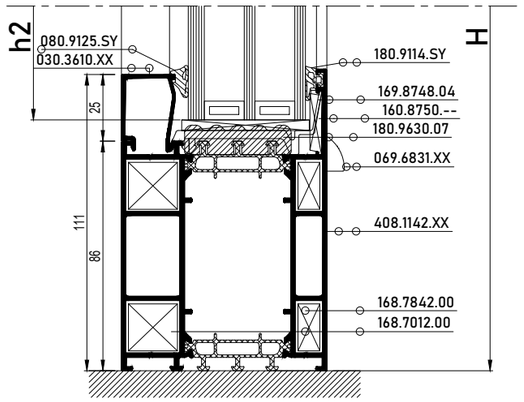

DCI 4

DCI 5

DSI 4

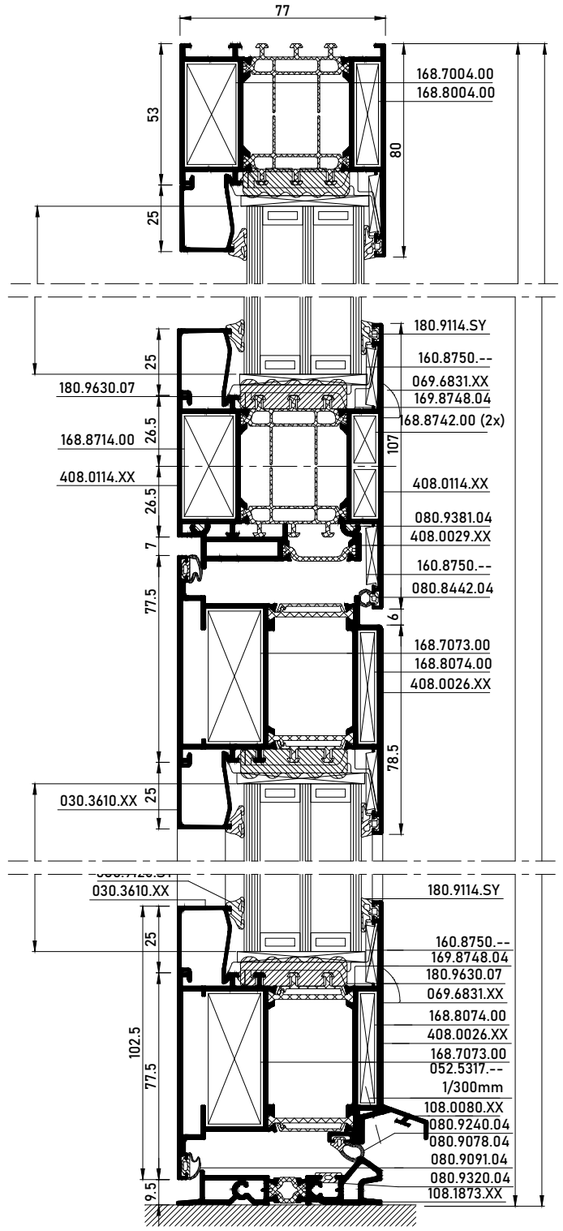

SECTIONS MASTERLINE 8-Fu

COMBINED DOOR INWARD OPENING WITH DOUBLE WEATHER STRIP - BOTTOM DOOR RAIL

MASTERLINE 8-Fu

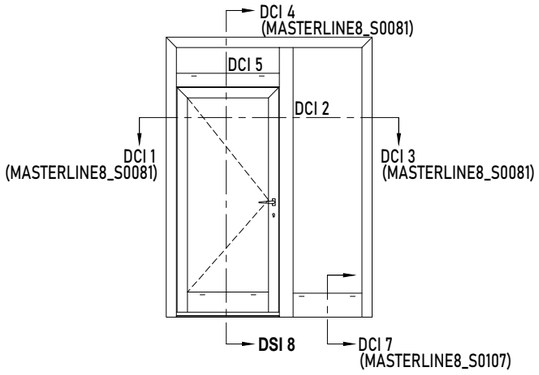

b1 = B1 - 264.5
h1 = H1 - 254.6
b2 = B2 - 95.5
h2= H - 182
h3 = H3 - 95.5
b3 = B1 - 95.5



		#
069.8427.04		4
080.8442.04		B1+(2xH1)
180.9114.SY		(4xb1)
		(2xb2)
		(4xh3)

			#	Lm
408.0125.XX			1	B
			1	H
			1	H
408.0026.XX			1	B - 97
			1	H - 58
			1	H - 58
408.0010.XX			1	B1 - 248.5
408.0029.XX			1	B1 - 69.5
			1	H1 - 21.5
			1	H1 - 21.5
408.1140.XX			1	B2 - 79.5
408.0114.XX			1	B1 - 79.5
			1	H - 53
030.3610.XX			2	B1 - 248.5
			2	H1 - 251.5
			2	B1 - 79.5
			2	H3 - 129.5
			2	B2 - 79.5
			2	H - 189
108.0085.XX			1	B - 149
108.0009.04			1	B1 - 248.5
108.0084.XX			1	B1 - 136.5
108.0086.XX			1	B - 97
108.1873.XX			1	B - 139.5

BESLAG DEUREN > ZIE "OPENING DOORS"
ACCESSOIRES PORTES > VOIRE "OPENING DOORS"
DOORS GEAR > SEE "OPENING DOORS"
TUERENBESCHLAG > SIEHE "OPENING DOORS"

		#
168.7071.00		2
168.8072.00		2
168.7073.00		2
160.8750.--		14
168.8712.00		8
168.5000.00		16
160.8750.--		2
168.8742.00		8
168.5012.--		2
168.8688.04		10
169.8748.04		19H.F. ...
069.6831.XX		19H.F. ...
069.8426.04		2
052.5316.--		4
069.8373.04		1
187.1142.07		B2-79.5
168.8742.00		6
168.8714.00		3
168.5000.00		6
168.5012.--		7
052.5327.--		1/300mm
052.5317.--		1/300mm
052.5301.--		1/300mm
069.8360.04		1
052.5313.--		4
052.5316.--		4
080.9078.04		B1+(2xH1)
080.9091.04		4
080.9381.04		(2xB1)+(4xH1)
080.9125.SY		(2xb1)+(2xh1)
		(2xb2)+(2xh2)
		(2xb3)+(2xh3)
180.9630.07		(4xb1)
		(2xb2)
		(4xh3)

DSI 8

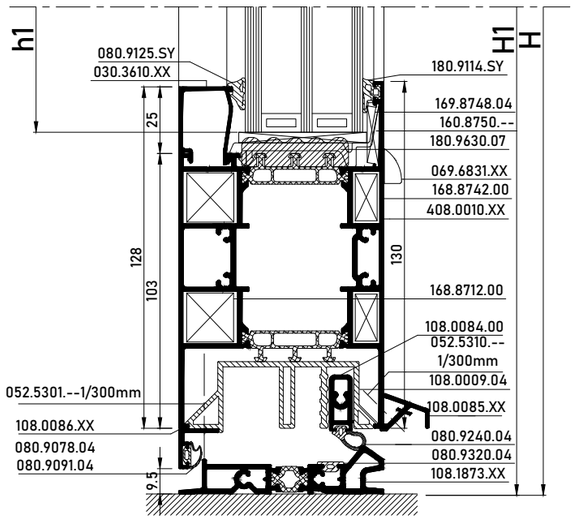

SECTIONS MASTERLINE 8-Fu

DOOR OUTWARD OPENING WITH DOUBLE WEATHER STRIP

MASTERLINE 8-Fu

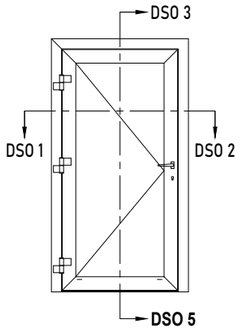

			#	Lm
408.0869.XX			1	B
			1	H
			1	H
408.0014.XX			2	B-97
			2	H-58
030.3610.XX			2	B-252
			2	H-263
108.0081.XX			1	B-133
108.1874.XX			1	B-143

		#
168.7071.00		2
168.8072.00		2
168.7073.00		4
168.8074.00		4
160.8750.--		4
169.8748.04		PROD STEPS
052.5317.--		1/300mm
052.5316.--		2
069.6831.XX		19.F....
069.8360.04		1
052.5313.--		4
052.5316.--		4
069.8426.04		2
069.8427.04		2
052.5316.--		4
080.9078.04		(3xB)+(4xH)
080.9091.04		4
080.9320.04		B
080.9240.04		PROD STEPS
080.9125.SY		(2xb)+(2xh)
180.9114.SY		(2xb)+(2xh)
180.9630.07		(2xb)+(2xh)

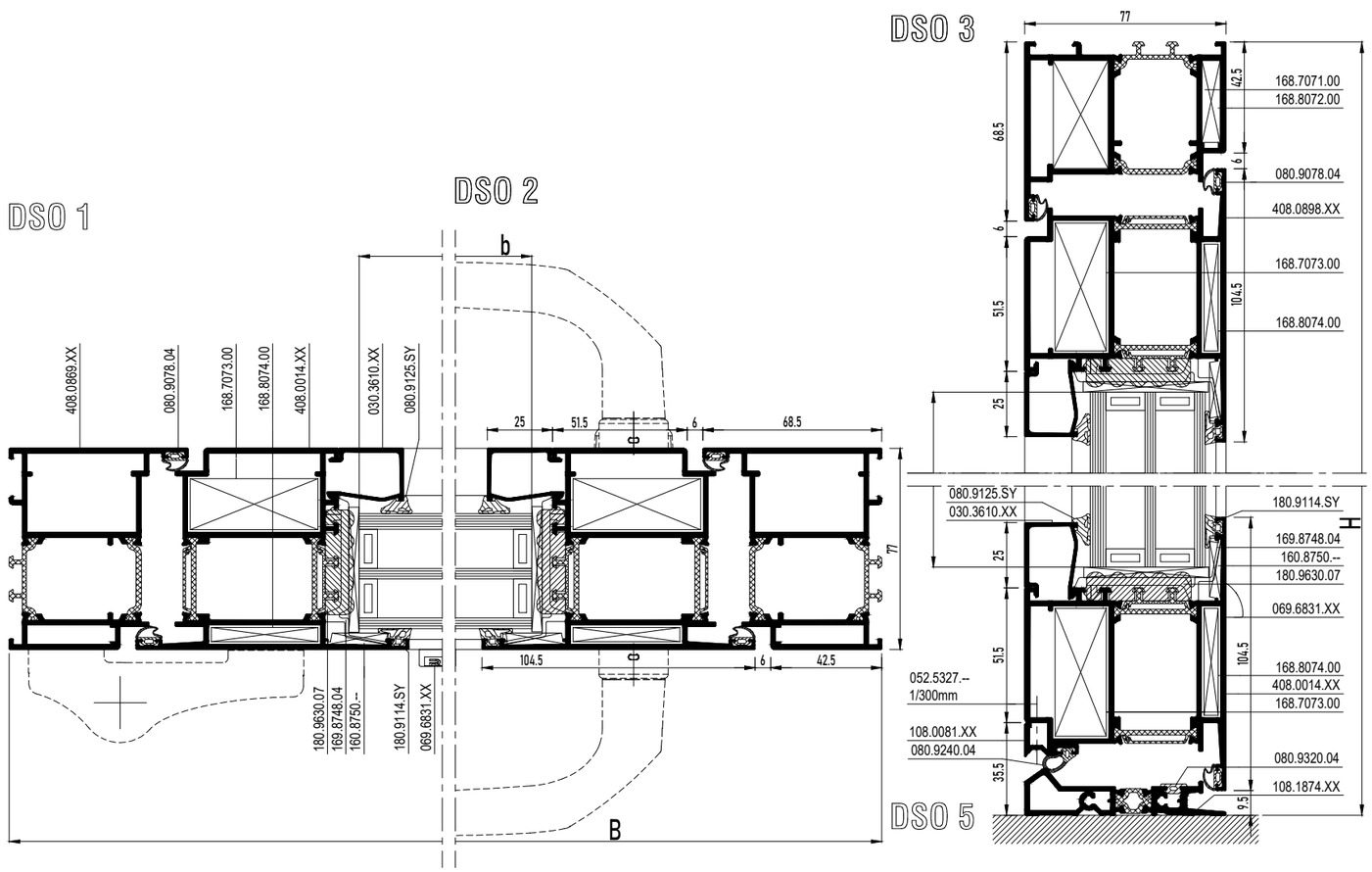

b = B - 268

h = H - 229

ZIE BEGLAZINGSMETHODE
VOIR METHODE DE VITRAGE
SEE GLAZING METHOD
SIEHE VERGLASUNGSWEISE

BESLAG DEUREN > ZIE HARDWARE CONFIGURATOR
ACCESSOIRES PORTES > VOIRE HARDWARE CONFIGURATOR
DOORS GEAR > SEE HARDWARE CONFIGURATOR
TUERENBESCHLAG > SIEHE HARDWARE CONFIGURATOR

SECTIONS MASTERLINE 8-Fu

COMBINED DOOR INWARD OPENING WITH DOUB. WEATHER STRIP - FIXED LIGHT

MASTERLINE 8-Fu

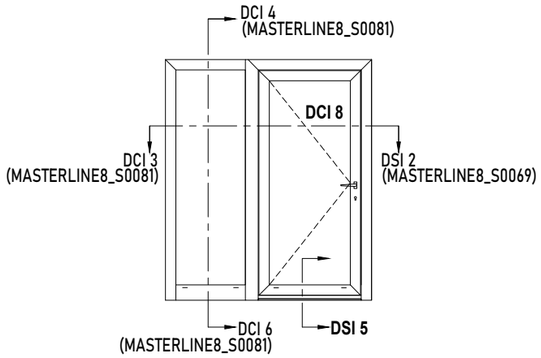

b1 = B1 - 93.5
b2 = B2 - 261
h1 = H - 155
h2 = H - 238

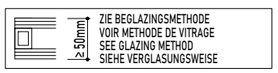

		#	Lm
408.0598.XX		1	B2 + 52.2
		1	H
408.0125.XX		1	B1 - 52.2
		1	H
408.0026.XX		2	B2 - 89
		2	H - 67
408.0798.XX		1	H + 27
408.1142.XX		1	B1 - 78
030.3610.XX		2	H - 189
		2	B1 - 78
		2	H - 272
		2	B2 - 245
108.0080.XX		1	B2 - 126
108.1873.XX		1	B2 - 135

BESLAG DEUREN > ZIE "OPENING DOORS"
ACCESSOIRES PORTES > VOIRE "OPENING DOORS"
DOORS GEAR > SEE "OPENING DOORS"
TUERENBESCHLAG > SIEHE "OPENING DOORS"

	#
168.7004.00	1
168.8004.00	1
168.7073.00	6
168.8074.00	6
068.8808.00	2
160.8750.--	8
168.8742.00	6
168.8712.00	4
168.5000.00	8
168.8714.00	3
168.5000.00	6
069.6831.XX	19.F. ...
169.8748.04	19.F. ...
069.8748.00	19.F. ...
052.5317.--	1/300mm
069.8360.04	1
052.5313.--	4
052.5316.--	4
069.8426.04	2
052.5316.--	4
080.9320.04	B2 - 93.5
080.9078.04	(3xB)+(6xH)
080.9091.04	6
080.9240.04	19.F. ...
080.9125.SY	(2xb1)+(2xb2)
	(2xh1)+(2xh2)
180.9114.SY	(2xb1)+(2xb2)
	(2xh1)+(2xh2)
180.9630.07	(2xb1)+(2xb2)
	(2xh)+(2xh2)
069.8427.04	4

DCI 8

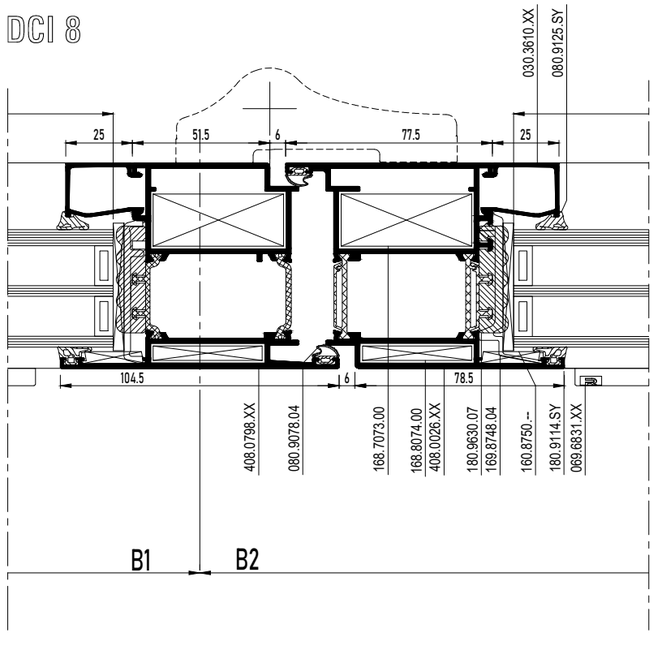

DSI 5

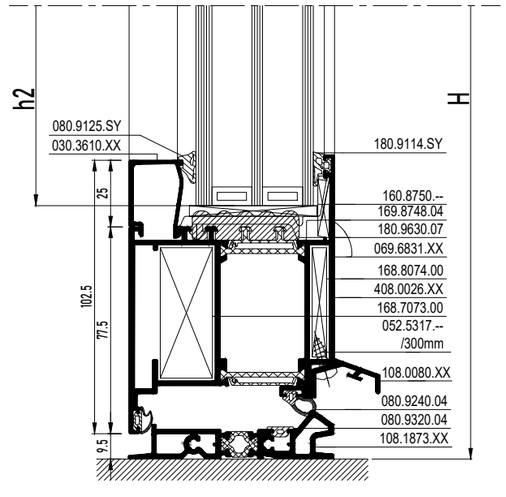

SECTIONS MASTERLINE 8-Fu

DOOR OUTWARD OPENING WITH DOUBLE WEATHER STRIP - BOTTOM DOOR RAIL

MASTERLINE 8-Fu

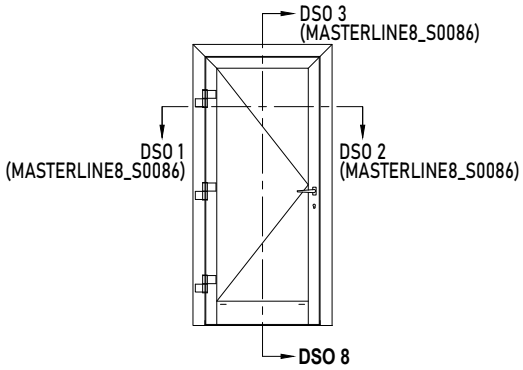

DSO 8

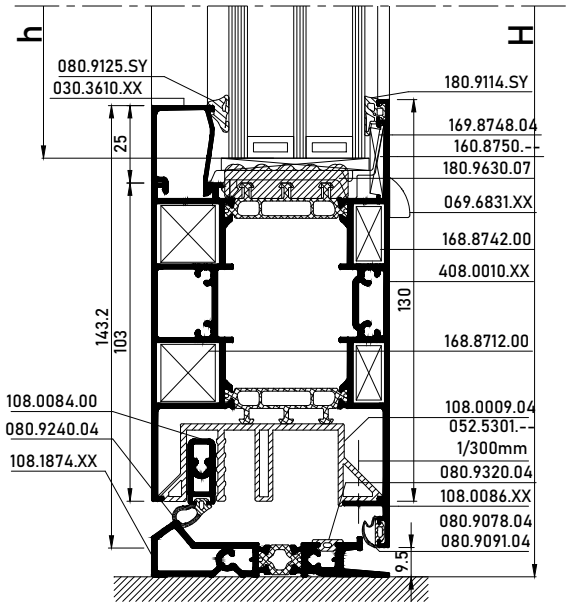

			#	Lm
408.0869.XX			1	B
			1	H
			1	H
408.0014.XX			1	B - 97
			1	H - 73
			1	H - 73
408.0010.XX			1	B - 252
030.3610.XX			2	B - 252
			2	H - 303.5
108.0009.04			1	B - 252
108.0084.00			1	B - 133
108.0086.XX			1	B - 97
108.1873.XX			1	B - 143

b = B - 268

h = H - 269.5

50mm

ZIE BEGLAZINGSMETHODE
VOIR METHODE DE VITRAGE
SEE GLAZING METHOD
SIEHE VERGLASUNGSWEISE

BESLAG DEUREN > ZIE "OPENING DOORS"
ACCESSOIRES PORTES > VOIRE "OPENING DOORS"
DOORS GEAR > SEE "OPENING DOORS"
TUERENBESCHLAG > SIEHE "OPENING DOORS"

		#
168.7071.00		2
168.8072.00		2
168.7073.00		4
168.8072.00		4
160.8750.--		4
168.8712.00		4
168.5000.00		8
160.8750.--		2
168.8742.00		4
168.5012.--		2
169.8748.04		19.F. ...
052.5315.--		1/300mm
069.6831.XX		19.F. ...
069.8360.04		1
052.5313.--		4
052.5316.--		4
069.8426.04		2
069.8427.04		2
052.5316.--		4
080.9078.04		2xB + 4xH
080.9091.04		4
080.9320.04		B
080.9240.04		19H.F. ...
080.9125.SY		2xb + 2xh
180.9114.SY		2xb + 2xh
180.9630.07		2xb + 2xh
168.8688.04		4

SECTIONS MASTERLINE 8-Fu

DOOR INW. OPEN. WITH DOOR LATCH

MASTERLINE 8-Fu

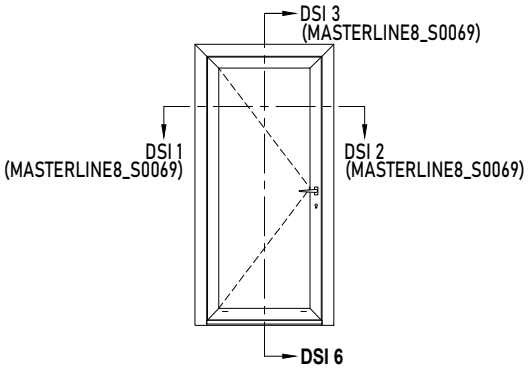

			#	Lm
408.0898.XX			1	B
			1	H
			1	H
408.0026.XX			2	B-97
			2	H-58.5
030.3610.XX			2	B-252
			2	H-263.5
108.0082.XX			1	B - 139

b = B - 268
h= H - 229.5

≥ 50mm
ZIE BEGLAZINGSMETHODE
VOIR METHODE DE VITRAGE
SEE GLAZING METHOD
SIEHE VERGLASUNGSWEISE

BESLAG DEUREN > ZIE "HARDWARE CONFIGURATOR"
ACCESSOIRES PORTES > VOIRE "HARDWARE CONFIGURATOR"
DOORS GEAR > SEE "HARDWARE CONFIGURATOR"
TUERENBESCHLAG > SIEHE "HARDWARE CONFIGURATOR"

	#
168.7071.00	2
168.8072.00	2
168.7073.00	4
168.8074.00	4
160.8750.--	4
169.8748.04	PROD STEPS
052.5315.--	1/300mm
069.6831.XX	19H.F. ...
169.8513.04	1
052.5316.--	4
169.8510.04	1
069.8426.04	2
052.5316.--	4
080.9078.04	3xB + 4xH
080.9091.04	2
080.9125.SY	2xb + 2xh
180.9114.SY	2xb + 2xh
180.9630.07	2xb + 2xh
081.9040.--	PROD STEPS
081.9236.04	4 x (60.5mm)
081.9092.04	1 x (60.5mm)

DSI 6

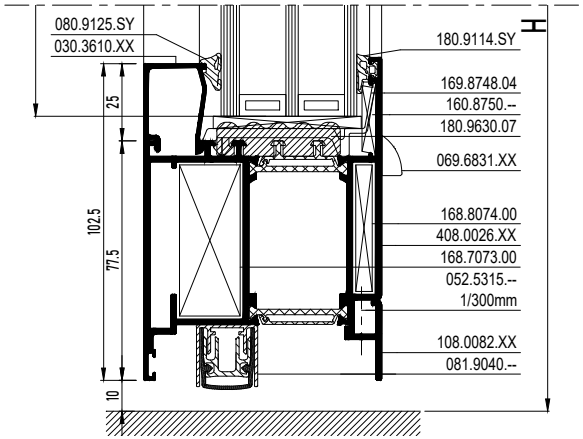

SECTIONS MASTERLINE 8-Fu

DOUBLE CASEMENT DOOR OUTWARD OPENING WITH DOUBLE WEATHER STRIP

MASTERLINE 8-Fu

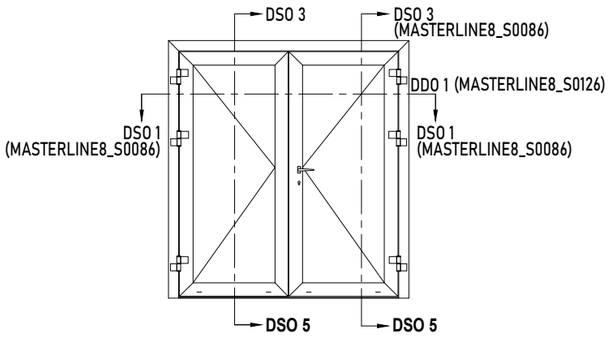

			#	Lm
408.0869.XX			1	B
			1	H
			1	H
408.0014.XX			2	B1 - 51.5
			2	B2 - 51.5
			4	H - 58
108.1815.XX			1	H - 100.5
030.3610.XX			2	B1 - 206.5
			2	B2 - 206.5
			4	H - 263
108.0081.XX			1	B1 - 43.5
			1	B2 - 87.5
108.1874.XX			1	B - 143

b1 = B1 - 222.5	
b2 = B2 - 222.5	
h = H - 229.5	

ZIE BEGLAZINGSMETHODE
VOIR METHODE DE VITRAGE
SEE GLAZING METHOD
SIEHE VERGLASUNGSWEISE

BESLAG DEUREN > ZIE HARDWARE CONFIGURATOR
ACCESSOIRES PORTES > VOIRE HARDWARE CONFIGURATOR
DOORS GEAR > SEE HARDWARE CONFIGURATOR
TUERENBESCHLAG > SIEHE HARDWARE CONFIGURATOR

		#
168.7071.00		2
168.8072.00		2
168.7073.00		6
168.8074.00		8
168.7088.00		2
160.8750.--		8
069.8518.04		1
052.5312.--		1
069.6831.XX		PROD STEPS
169.8748.04		PROD STEPS
080.9381.04		(2xh)
052.5327.--		1/300mm
052.5316.--		4
069.8360.04		1
052.5313.--		4
052.5316.--		4
069.8426.04		4
069.8427.04		4
052.5316.--		8
052.5318.--		1/300mm
080.9078.04		(3xB)+(6xH)
080.9091.04		6
080.9240.04		PROD STEPS
080.9320.04		B
080.9125.SY		(2xb1)+(2xb2)
		+(4xh)
180.9114.SY		(2xb1)+(2xb2)
		+(4xh)
180.9630.07		(2xb1)+(2xb2)
		+(4xh)

DSO 5

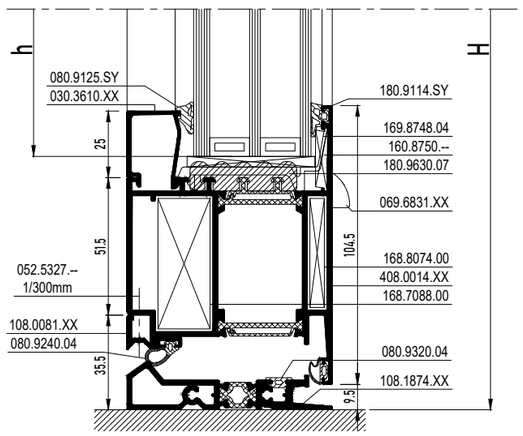

SECTIONS MASTERLINE 8-Fu

DOOR INWARD OPENING WITH AUTOMATIC DRAUGHT EXCLUDER - BOTTOM DOOR RAIL

MASTERLINE 8-Fu

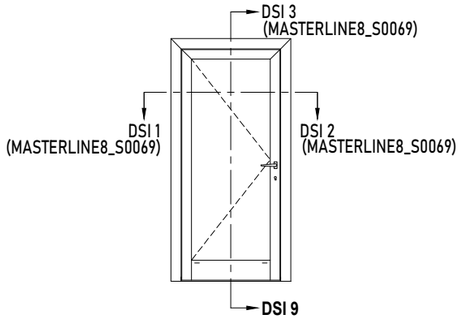

DSI 9

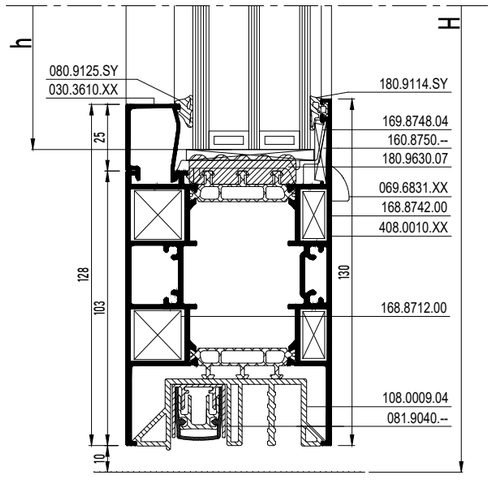

			#	Lm
408.0898.XX			1	B
			1	H
			1	H
408.0026.XX			1	B - 97
			1	H - 58.5
			1	H - 58.5
408.0010.XX			1	B - 252
030.3610.XX			2	B - 252
			2	H - 292
108.0009.04			1	B - 252

b = B - 268
h= H - 258

ZIE BEGLAZINGSMETHODE
VOIR METHODE DE VITRAGE
SEE GLAZING METHOD
SIEHE VERGLASUNGSWEISE

BESLAG DEUREN > ZIE "HARDWARE CONFIGURATOR"
ACCESSOIRES PORTES > VOIRE "HARDWARE CONFIGURATOR"
DOORS GEAR > SEE "HARDWARE CONFIGURATOR"
TUERENBESCHLAG > SIEHE "HARDWARE CONFIGURATOR"

	#
168.7071.00	2
168.8072.00	2
168.7073.00	2
168.8074.00	2
160.8750.--	2
168.8712.00	4
160.8750.--	2
168.8742.00	4
168.5012.--	2
169.8748.04	PROD STEPS
069.6831.XX	PROD STEPS
169.8513.04	1
052.5316.--	4
169.8510.04	1
069.8426.04	2
052.5316.--	4
080.9078.04	3xB + 4xH
080.9091.04	2
080.9125.SY	2xb + 2xh
180.9114.SY	2xb + 2xh
180.9630.07	2xb + 2xh
081.9040.--	PROD STEPS
081.9236.04	4 x (60.5mm)
081.9092.04	1 x (60.5mm)

SECTIONS MASTERLINE 8-Fu

DOUBLE CASEMENT DOOR OUTWARD OPENING WITH DOUBLE WEATHER STRIP - BOTTOM DOOR RAIL

MASTERLINE 8-Fu

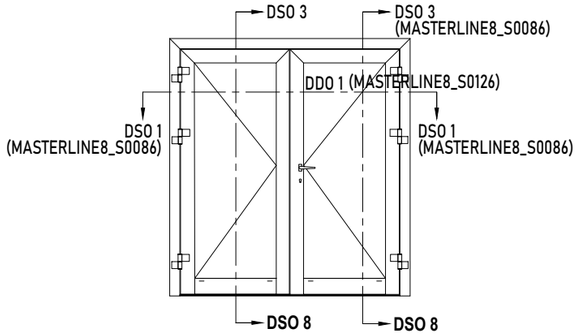

DSO 8

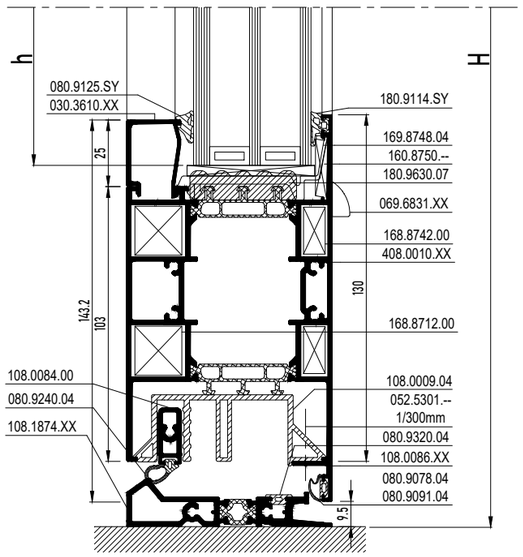

			#	L_m
408.0869.XX			1	B
			1	H
			1	H
408.0014.XX			1	B1 - 51.5
			1	B2 - 51.5
			2	H - 73
			2	H - 73
408.0010.XX			1	B1 - 206.5
			1	B2 - 206.5
108.1815.XX			1	H - 94
030.3610.XX			2	B1 - 206.5
			2	B2 - 206.5
			4	H - 303.5
108.0009.04			1	B1 - 206.5
			1	B2 - 206.5
108.0084.00			1	B1 - 61.5
			1	B2 - 87.5
108.0086.XX			1	B1 - 46.5
			1	B2 - 51.5
108.1873.XX			1	B - 143

BESLAG DEUREN › ZIE "OPENING DOORS"
ACCESSOIRES PORTES › VOIRE "OPENING DOORS"
DOORS GEAR › SEE "OPENING DOORS"
TUERENBESCHLAG › SIEHE "OPENING DOORS"

b1 = B1 - 222.5
b2 = B2 - 222.5
h = H - 269.5

50mm
ZIE BEGLAZINGSMETHODE
VOIR METHODE DE VITRAGE
SEE GLAZING METHOD
SIEHE VERGLASUNGSWEISE

	#
168.7071.00	2
168.8072.00	2
168.7073.00	6
168.8074.00	8
068.8808.00	2
160.8750.--	4
168.8712.00	8
168.5000.00	16
160.8750.--	4
168.8742.00	8
168.5012.--	4
069.8518.04	1
052.5312.--	1
069.6831.XX	19.F. ...
169.8748.04	19.F. ...
080.9381.04	(2xh)
052.5327.--	1/300mm
052.5316.--	4
069.8360.04	1
052.5313.--	4
052.5316.--	4
069.8426.04	4
069.8427.04	4
052.5316.--	8
052.5317.--	1/400 mm
080.9078.04	(3xB)+(6xH)
080.9091.04	6
080.9240.04	19H.F. ...
080.9320.04	B
080.9240.04	19.F. ...
080.9125.SY	(2xb1)+(2xb2)
	+(4xh)
180.9114.SY	(2xb1)+(2xb2)
	+(4xh)

	#
180.9630.07	(2xb1)+(2xb2)
	+(4xh)

SECTIONS MASTERLINE 8-Fu

DOUBLE CASEMENT DOOR INWARD OPENING WITH AUTOMATIC DRAUGHT EXCLUDER

MASTERLINE 8-Fu

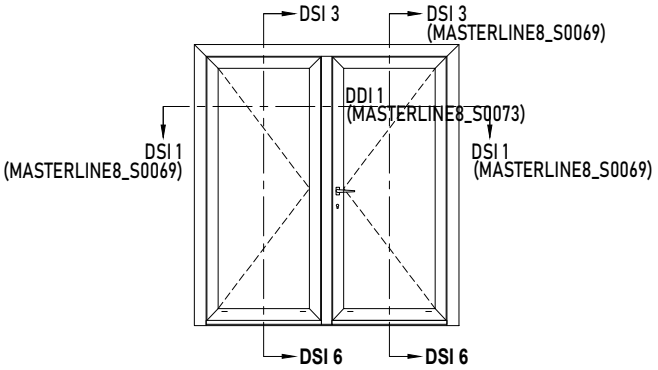

DSI 6

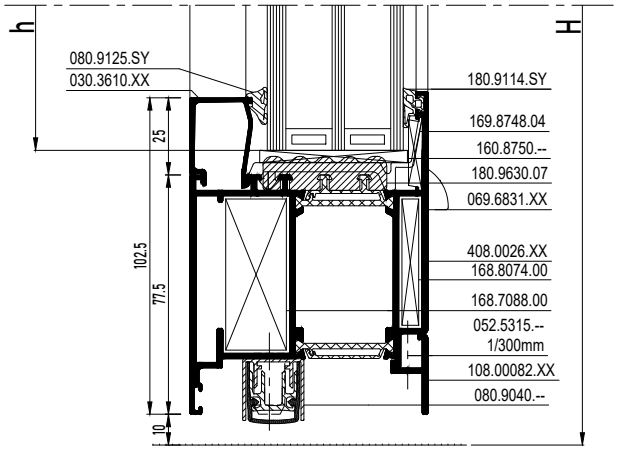

			#	Lm
408.0898.XX			1	B
			1	H
			1	H
408.0026.XX			2	B1 - 51.5
			2	B2 - 51.5
			4	H - 58.5
108.1015.XX			1	H - 79.5
030.3610.XX			2	B1 - 206.5
			2	B2 - 206.5
			4	H - 263.5
108.0082.XX			1	B1 - 93.5
			1	B2 - 93.5

b1 = B1-222.5
b2 = B2-222.5
h = h-232.5

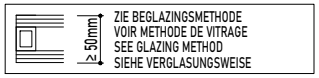

BESLAG DEUREN > ZIE "HARDWARE CONFIGURATOR"
ACCESSOIRES PORTES > VOIRE "HARDWARE CONFIGURATOR"
DOORS GEAR > SEE "HARDWARE CONFIGURATOR"
TUERENBESCHLAG > SIEHE "HARDWARE CONFIGURATOR"

	#
168.7071.00	2
168.8072.00	2
168.7073.00	6
168.8074.00	8
168.7088.00	2
160.8750.--	8
069.8426.04	4
052.5316.--	8
069.8515.04	1
052.5312.--	1
069.6831.XX	PROD STEPS
169.8748.04	PROD STEPS
169.8513.04	1
052.5316.--	4
169.8510.04	2
052.5315.--	1/300mm
052.5318.--	1/300mm
080.9381.04	(2xh)
080.9078.04	2B + 6H
080.9091.04	3
080.9125.SY	2xb1 + 2xb2
	+(4xh)
180.9114.SY	2xb1 + 2xb2
	+(4xh)
180.9630.07	2xb1 + 2xb2
	+(4xh)
081.9040.--	PROD STEPS
081.9236.04	6 x (60.5mm)

SECTIONS MASTERLINE 8-Fu

Z-T DOOR OUTWARD OPENING WITH DOUBLE WEATHER STRIP

MASTERLINE 8-Fu

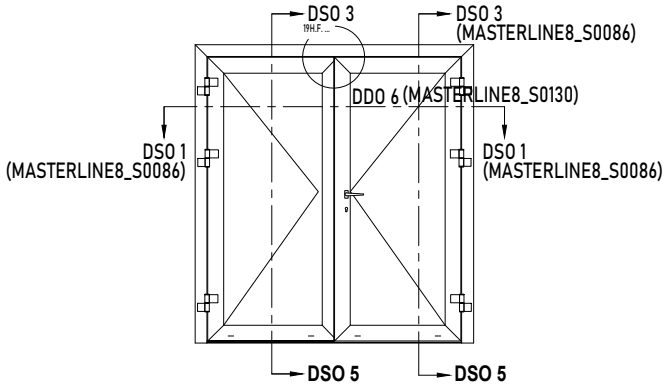

DSO 5

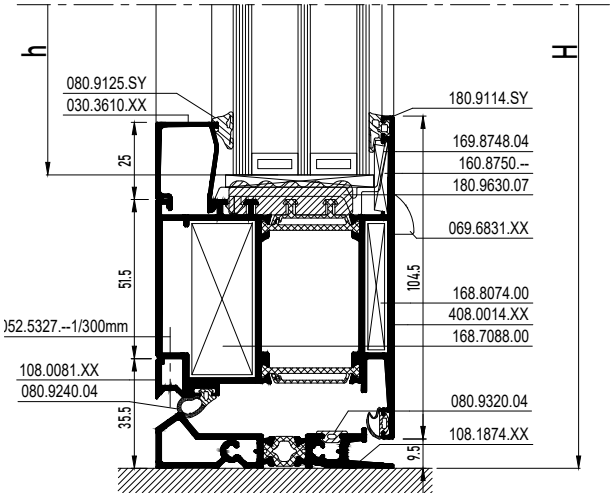

			#	Lm
408.0869.XX			1	B
			1	H
			1	H
408.0014.XX			2	B1 - 38.5
			2	B2 - 38.5
			3	H - 58
408.0026.XX			1	H - 58
030.3610.XX			2	B1 - 193.5
			2	B2 - 193.5
			4	H - 263
108.0081.XX			1	B1 - 68.5
			1	B2 - 74.5
108.1874.XX			1	B - 143

b1 = B1 - 209.5
b2 = B2 - 209.5
h = H - 229

≥ 50mm
ZIE BEGLAZINGSMETHODE
VOIR METHODE DE VITRAGE
SEE GLAZING METHOD
SIEHE VERGLASUNGSWEISE

BESLAG DEUREN > ZIE "OPENING DOORS"
ACCESSOIRES PORTES > VOIRE "OPENING DOORS"
DOORS GEAR > SEE "OPENING DOORS"
TUERENBESCHLAG > SIEHE "OPENING DOORS"

		#
168.7071.00		2
168.8072.00		2
168.7073.00		6
168.8074.00		8
168.7088.00		2
160.8750.--		8
069.8511.04		1
069.8512.04		1
069.6831.XX		19.F. ...
169.8748.04		19.F. ...
052.5316.--		4
052.5327.--		1/300mm
069.8360.04		1
052.5313.--		4
052.5316.--		4
069.8426.04		4
069.8427.04		4
052.5316.--		8
080.9320.04		B
080.9078.04		(3xB)+(6xH)
080.9091.04		6
080.9240.04		19.F. ...
080.9125.SY		(2xb1)+(2xb2)
		+(4xh)
180.9114.SY		(2xb1)+(2xb2)
		+(4xh)
180.9630.07		(2xb1)+(2xb2)
		+(4xh)

SECTIONS MASTERLINE 8-Fu

DOUBLE CASEMENT DOOR INWARD OPENING WITH AUTOMATIC DRAUGHT EXCLUDER - BOTTOM DOOR RAIL

MASTERLINE 8-Fu

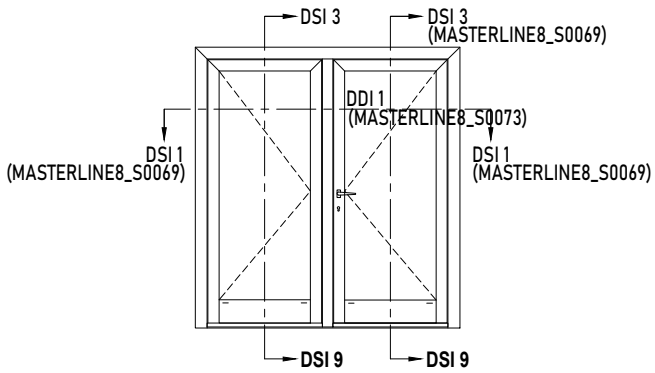

DSI 9

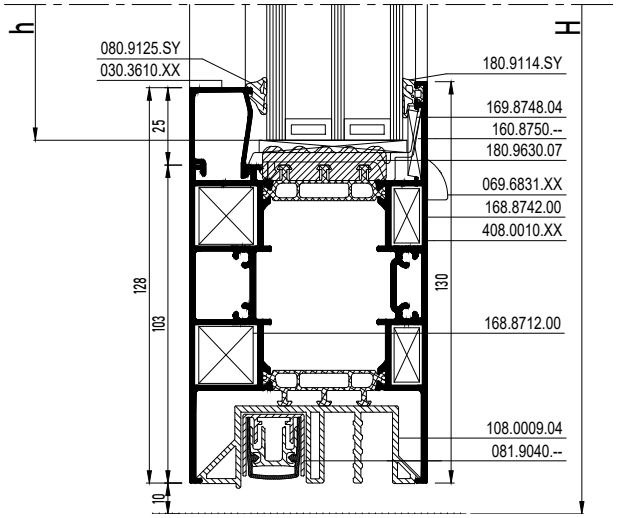

			#	Lm
408.0898.XX			1	B
			1	H
			1	H
408.0026.XX			1	B1 - 51.5
			1	B2 - 51.5
			2	H - 58.5
			2	H - 58.5
408.0010.XX			2	B1 - 206.5
108.1015.XX			1	H - 82.5
030.3610.XX			2	B1 - 206.5
			2	B2 - 206.5
			4	H - 292
108.0009.04			1	B1 - 206.5
			1	B2 - 206.5

b1 = B1-222.5
b2 = B2-222.5
h = H - 258

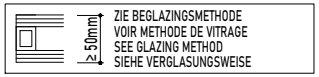

BESLAG DEUREN > ZIE "HARDWARE CONFIGURATOR"
ACCESSOIRES PORTES > VOIRE "HARDWARE CONFIGURATOR"
DOORS GEAR > SEE "HARDWARE CONFIGURATOR"
TUERENBESCHLAG > SIEHE "HARDWARE CONFIGURATOR"

	#
168.7071.00	2
168.8072.00	2
168.7073.00	6
168.8074.00	8
168.7088.00	2
160.8750.--	4
168.8712.00	8
160.8750.--	4
168.8742.00	8
168.5012.--	4
069.8426.04	4
052.5316.--	8
069.8515.04	1
052.5312.00	1
069.6831.XX	PROD STEPS
169.8748.04	PROD STEPS
169.8513.04	1
052.5316.--	4
169.8510.04	2
052.5315.--	1/300mm
052.5318.--	1/300mm
080.9381.04	(2xh)
080.9078.04	(2xB)+(6xH)
080.9091.04	3
080.9125.SY	(2xb1)+(2xb2)
	+(4xh)
180.9114.SY	(2xb1)+(2xb2)
	+(4xh)
180.9630.07	(2xb1)+(2xb2)
	+(4xh)
081.9040.--	PROD STEPS
081.9236.04	6 x (60.5mm)

SECTIONS MASTERLINE 8-Fu

Z-T DOOR OUTWARD OPENING WITH DOUBLE WEATHER STRIP - BOTTOM DOOR RAIL

MASTERLINE 8-Fu

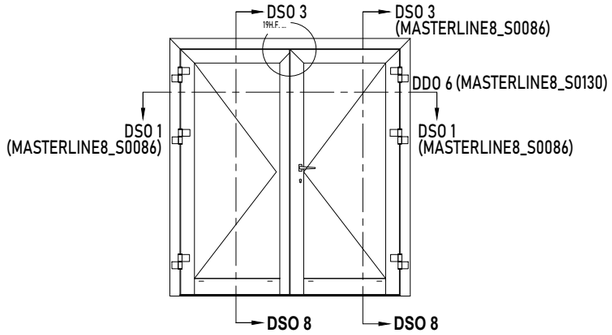

DSO 8

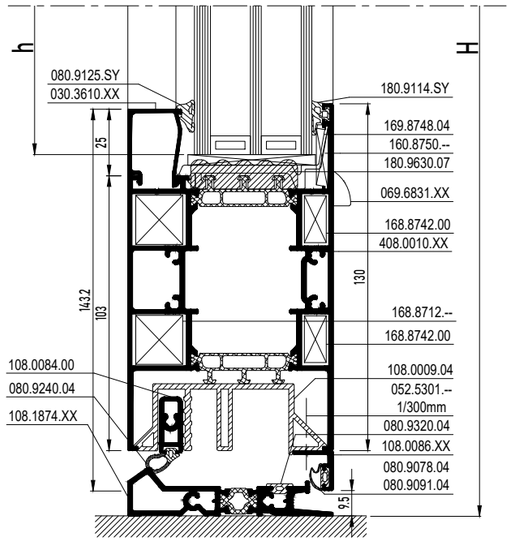

			#	Lm
408.0869.XX			1	B
			1	H
			1	H
408.0014.XX			1	B1 - 38.5
			1	B2 - 38.5
			2	H - 73
			1	H - 73
408.0026.XX			1	H - 73
408.0010.XX			1	B1 - 193.5
			1	B2 - 193.5
030.3610.XX			2	B1 - 193.5
			2	B2 - 193.5
			4	H - 303.5
108.0009.04			1	B1 - 193.5
			1	B2 - 193.5
108.0084.00			1	B1 - 74.5
			1	B2 - 74.5
108.0086.XX			1	B1 - 59.5
			1	B2 - 38.5
108.1873.XX			1	B - 143

b1 = B1 - 209.5	
b2 = B2 - 209.5	
h = H - 269.5	

ZIE BEGLAZINGSMETHODE
VOIR METHODE DE VITRAGE
SEE GLAZING METHOD
SIEHE VERGLASUNGSWEISE
≥ 50mm

BESLAG DEUREN › ZIE HARDWARE CONFIGURATOR
ACCESSOIRES PORTES › VOIRE HARDWARE CONFIGURATOR
DOORS GEAR › SEE HARDWARE CONFIGURATOR
TUERENBESCHLAG › SIEHE HARDWARE CONFIGURATOR

	#
168.7071.00	2
168.8072.00	2
168.7073.00	6
168.8074.00	8
068.8808.00	2
160.8750.--	4
168.8712.00	8
168.5000.00	16
160.8750.--	4
168.8742.00	8
168.5012.--	4
069.8511.04	1
069.8512.04	1
069.6831.XX	19.F. ...
169.8748.04	19.F. ...
052.5316.--	4
052.5310.--	1/300mm
069.8360.04	1
052.5313.--	4
052.5316.--	4
069.8426.04	4
069.8427.04	4
052.5316.--	8
052.5317.--	1/400mm
080.9320.04	B
080.9078.04	(3xB)+(6xH)
080.9091.04	6
080.9240.04	19.F. ...
080.9125.SY	(2xb1)+(2xb2)
	+(4xh)
180.9114.SY	(2xb1)+(2xb2)
	+(4xh)
180.9630.07	(2xb1)+(2xb2)
	+(4xh)

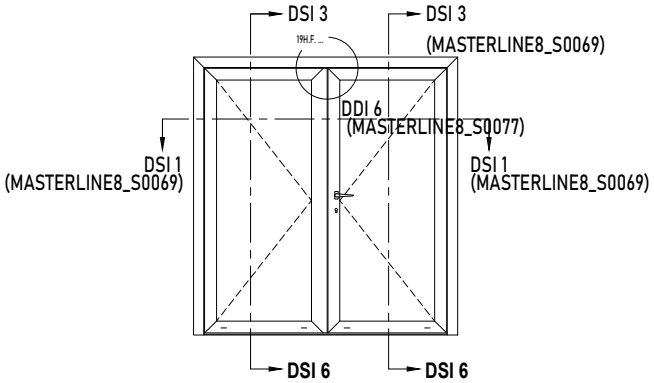

DSI 6

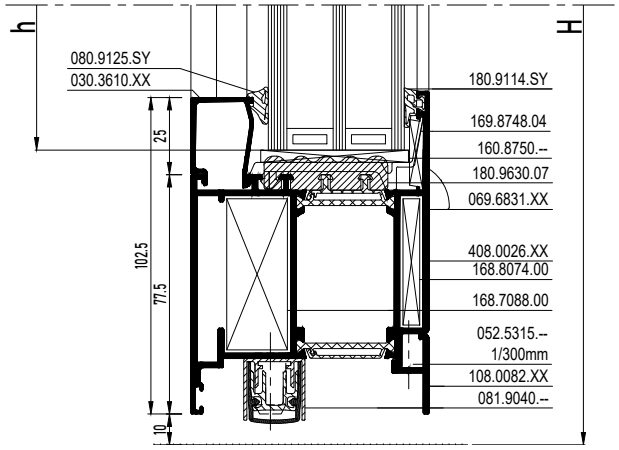

			#	Lm
408.0898.XX			1	B
			1	H
			1	H
408.0026.XX			2	B1 - 38.5
			2	B2 - 38.5
			1	H - 61.5
			2	H - 61.5
408.0014.XX			1	H - 61.5
030.3610.XX			2	B1 - 193.5
			2	B2 - 193.5
			4	H - 266.5
108.0030.XX			1	B1 - 93.5
			1	B2 - 93.5

b1 = B1 - 209.5
b2 = B2 - 209.5
h = h - 232.5

ZIE BEGLAZINGSMETHODE
VOIR METHODE DE VITRAGE
SEE GLAZING METHOD
SIEHE VERGLASUNGSWEISE

BESLAG DEUREN > ZIE "HARDWARE CONFIGURATOR"
ACCESSOIRES PORTES > VOIRE "HARDWARE CONFIGURATOR"
DOORS GEAR > SEE "HARDWARE CONFIGURATOR"
TUERENBESCHLAG > SIEHE "HARDWARE CONFIGURATOR"

	#
168.7071.00	2
168.8072.00	2
168.7073.00	6
168.8074.00	8
168.7088.00	2
160.8750.--	8
069.8511.04	1
069.8512.04	1
069.6831.XX	PROD STEPS
169.8748.04	PROD STEPS
169.8513.04	1
052.5316.--	4
169.8510.04	2
069.8426.04	4
052.5316.--	8
052.5315.--	1/300mm
052.5317.--	1/400mm
080.9078.04	(2xB)+(6xH)
080.9091.04	6
080.9125.SY	(2xb1)+(2xb2)
	+(4xh)
180.9114.SY	(2xb1)+(2xb2)
	+(4xh)
180.9630.07	(2xb1)+(2xb2)
	+(4xh)
081.9040.--	PROD STEPS
081.9236.04	6 x (60.5mm)

SECTIONS MASTERLINE 8-Fu

COMBINED DOOR OUTWARD OPENING WITH DOUBLE WEATHER STRIP

MASTERLINE 8-Fu

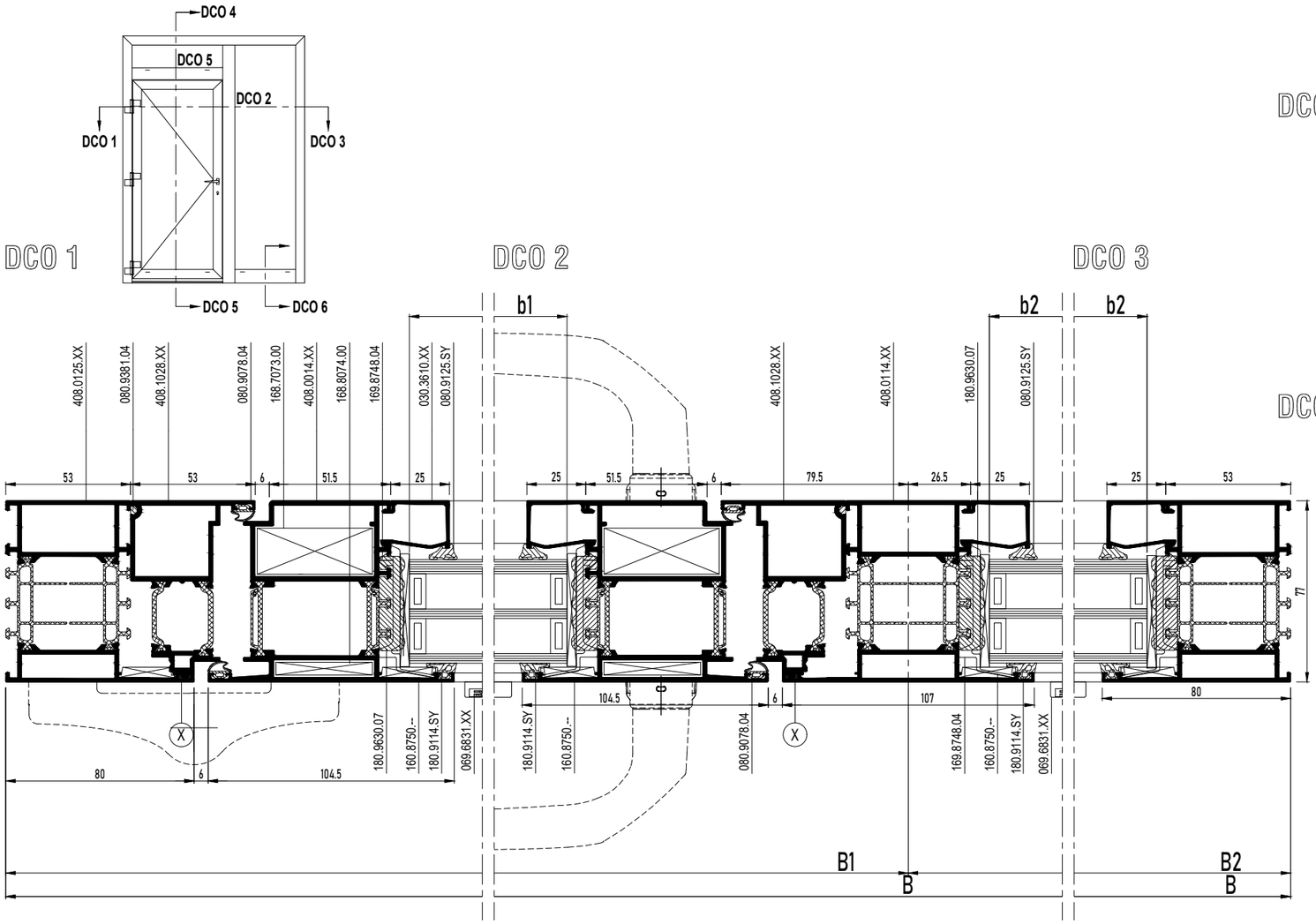

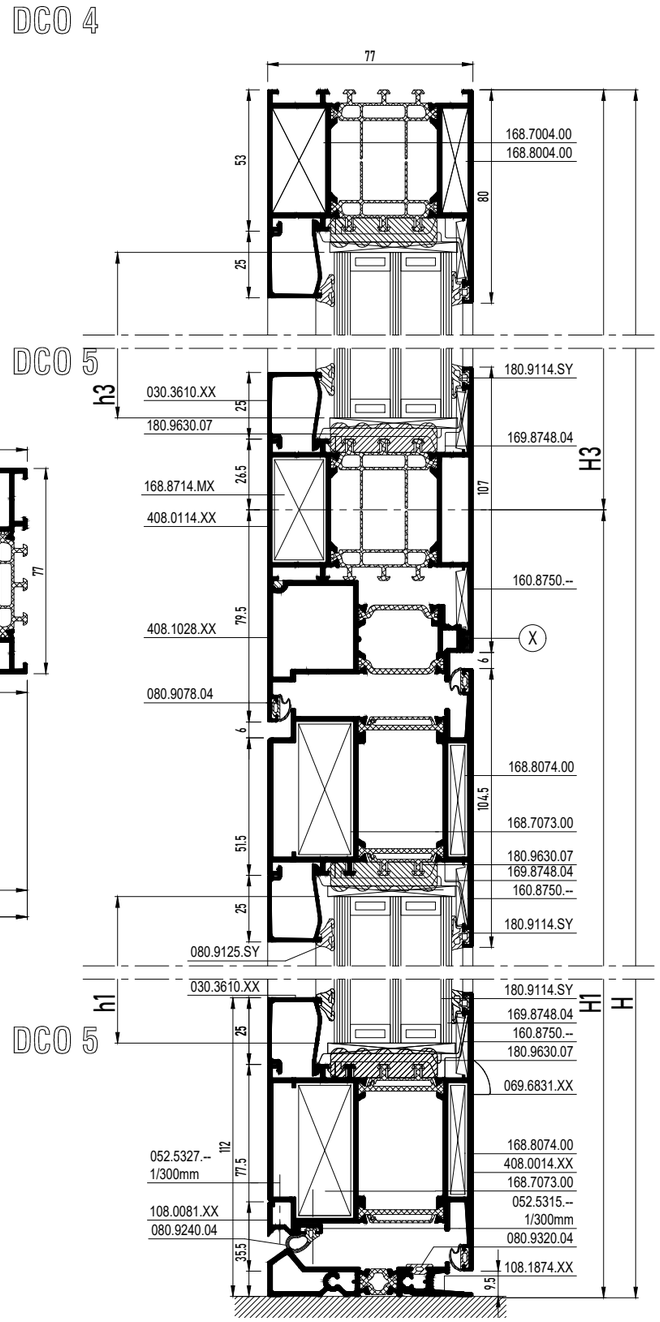

b1 = B1 - 316.5
h1 = H1 - 240
b2 = B2 - 95.5
h2 = H - 155
h3 = H3 - 95.5
b3 = B1 - 95.5

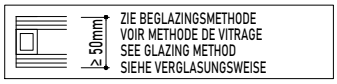

		#	Lm
408.0125.XX		1	B
		1	H
		1	H
408.0014.XX		2	B1 - 145.5
		2	H1 - 69
408.1028.XX		1	B1 - 79.5
		1	H1 - 26.5
		1	H1 - 26.5
408.0114.XX		1	B1 - 79.5
		1	H - 53
408.1142.XX		1	B2 - 79.5
030.3610.XX		2	B1 - 300.5
		2	H1 - 274
		2	B1 - 79.5
		2	H3 - 129.5
		2	B2 - 79.5
		2	H - 189
108.0081.XX		1	B1 - 181.5
108.1874.XX		1	B - 191.5

BESLAG DEUREN > ZIE "OPENING DOORS"
ACCESSOIRES PORTES > VOIRE "OPENING DOORS"
DOORS GEAR > SEE "OPENING DOORS"
TUERENBESCHLAG > SIEHE "OPENING DOORS"

DCO 6

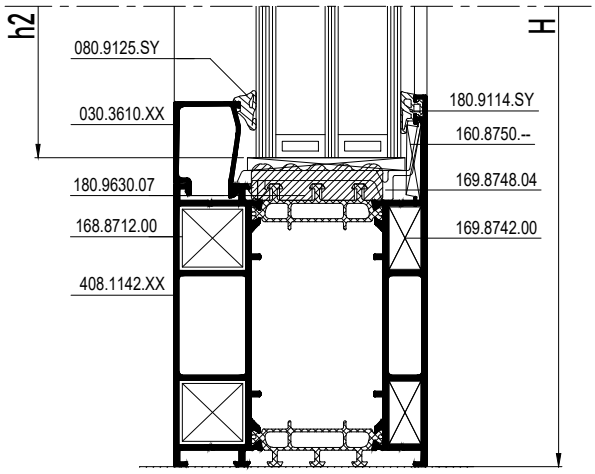

	#
168.7073.00	4
168.8074.00	4
168.7004.00	2
168.8004.00	2
160.8750.--	14
068.8520.00	2
050.5091.--	4
168.8714.00	3
168.5000.00	6
168.8712.00	4
168.5000.00	8
168.8688.04	10
168.8742.00	10
168.5012.--	7
169.8748.04	19H.F. ...
069.6831.XX	19H.F. ...
187.1142.07	B2 - 79.5
069.8360.04	1
052.5313.--	4
052.5316.--	4
069.8426.04	2
069.8427.04	2
052.5316.--	4
052.5317.--	1/400mm
052.5329.--	1/300mm
080.9091.04	4
080.9240.04	19H.F. ...
080.9320.04	B - 191.5
080.9078.04	(3xB1)+(4xH1)
080.9381.04	(2xB1)+(4xH1)
080.9125.SY	(2xb1)+(2xh1)
	(2xb2)+(2xh2)
	(2xb3)+(2xh3)
180.9630.07	(4xb1)+(2xb2)
	+(4xh)

	#
180.9114.SY	(4xb1)+(2xb2)
	+(4xh)
081.9141.04	19H.F. ...

SECTIONS MASTERLINE 8-Fu

Z-T DOOR INWARD OPENING WITH AUTOMATIC DRAUGHT EXCLUDER - BOTTOM DOOR RAIL

MASTERLINE 8-Fu

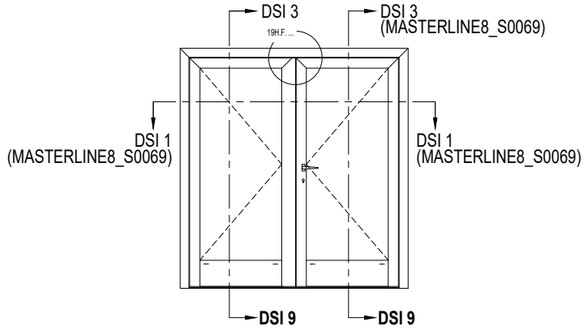

			#	Lm
408.0898.XX			1	B
			1	H
			1	H
408.0026.XX			1	B1 - 38.5
			1	B2 - 38.5
			1	H - 58.5
			2	H - 58.5
408.0014.XX			1	H - 61.5
408.0010.XX			2	B1 - 193.5
030.3610.XX			2	B1 - 193.5
			2	B2 - 193.5
			4	H - 292
108.0009.04			1	B1 - 193.5
			1	B2 - 193.5

BESLAG DEUREN > ZIE "HARDWARE CONFIGURATOR"
ACCESSOIRES PORTES > VOIRE "HARDWARE CONFIGURATOR"
DOORS GEAR > SEE "HARDWARE CONFIGURATOR"
TUERENBESCHLAG > SIEHE "HARDWARE CONFIGURATOR"

b1 = B1-209.5
b2 = B2-209.5
h = H - 258

ZIE BEGLAZINGSMETHODE
VOIR METHODE DE VITRAGE
SEE GLAZING METHOD
SIEHE VERGLASUNGSWEISE

		#
168.7071.00		2
168.8072.00		2
068.7798.00		6
168.8074.00		8
168.7088.00		2
168.8712.00		8
160.8750.--		4
168.8742.00		8
168.5012.--		4
160.8750.--		8
069.8511.04		1
069.8512.04		1
069.6831.XX		PROD STEPS
169.8748.04		PROD STEPS
169.8513.04		1
052.5316.--		4
169.8510.04		2
069.8426.04		4
052.5316.--		8
052.5315.--		1/300mm
052.5317.--		1/400mm
080.9078.04		(2xB)+(6xH)
080.9091.04		3
080.9125.SY		(2xb1)+(2xb2)
		+(4xh)
180.9114.SY		(2xb1)+(2xb2)
		+(4xh)
180.9630.07		(2xb1)+(2xb2)
		+(4xh)
081.9040.--		PROD STEPS
081.9236.04		6 x (60.5mm)

DSI 9

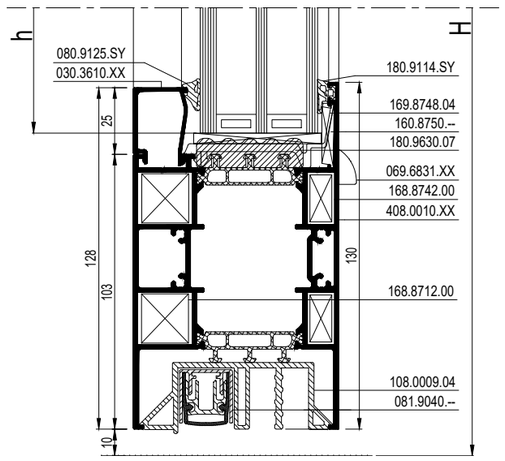

SECTIONS MASTERLINE 8-Fu

COMBINED DOOR INWARD OPENING WITH AUTOMATIC DRAUGHT EXCLUDER

MASTERLINE 8-Fu

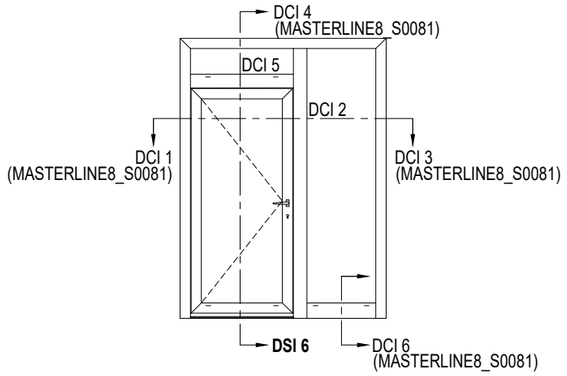

b1 = B1 - 265.5
h1 = H1 - 213.5
b2 = B2 - 95.5
h2= H - 155
b3 = B1 - 95.5
h3 = H3 - 95.5

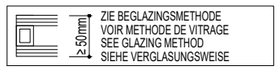

		#	Lm
408.0125.XX		1	B
		1	H
		1	H
408.0026.XX		2	B1 - 94.5
		2	H1 - 43.5
408.0029.XX		1	B1 - 69.5
		1	H1 - 21.5
		1	H1 - 21.5
408.0114.XX		1	B1 - 79.5
		1	H - 53
408.1142.XX		1	B2 - 79.5
030.3610.XX		2	B1 - 249.5
		2	H1 - 248.5
		2	B1 - 79.5
		2	H3 - 129.5
		2	B2 - 79.5
		2	H - 189
108.0082.XX		1	B1 - 135.5

BESLAG DEUREN > ZIE "HARDWARE CONFIGURATOR"
ACCESSOIRES PORTES > VOIRE "HARDWARE CONFIGURATOR"
DOORS GEAR > SEE "HARDWARE CONFIGURATOR"
TUERENBESCHLAG > SIEHE "HARDWARE CONFIGURATOR"

	#
168.7073.00	4
168.8074.00	4
168.7004.00	2
168.8004.00	2
160.8750.--	14
168.8714.00	3
168.8712.00	4
168.8688.04	10
169.8748.04	PROD STEPS
069.6831.XX	PROD STEPS
069.8426.04	2
052.5316.--	4
169.8513.04	1
052.5316.--	4
169.8510.04	1
168.8742.00	10
080.9078.04	B1+(2xH1)
080.9091.04	4
080.9381.04	(2xB1)+(4xH1)
080.9125.SY	(2xb1)+(2xh1)
	(2xb2)+(2xh2)
	(2xb3)+(2xh3)
180.9630.07	(4xb1)
	(2xb2)
	(4xh3)
080.8442.04	B1+(2xH1)
180.9114.SY	(4xb1)
	(2xb2)
	(4xh3)
081.9236.04	4 x (60.5mm)
081.9092.04	1 x (60.5mm)
081.9040.--	PROD STEPS

DSI 6

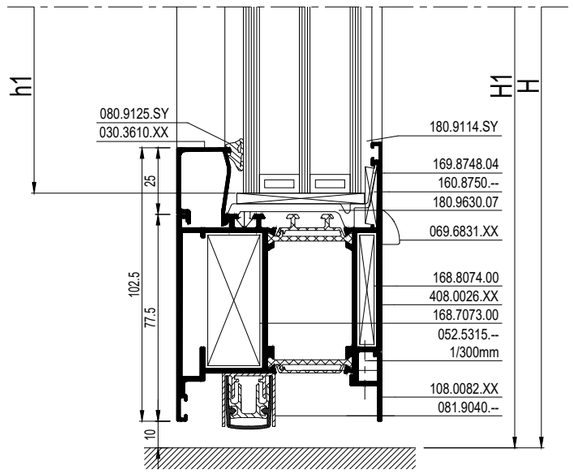

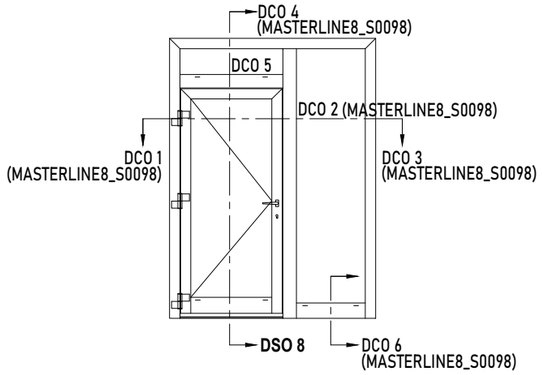

b1 = B1 - 316.5
h1 = H1 - 280.5
b2 = B2 - 95.5
h2 = H - 182
h3 = H3 - 95.5
b3 = B1 - 95.5

50mm ZIE BEGLAZINGSMETHODE
VOIR METHODE DE VITRAGE
SEE GLAZING METHOD
SIEHE VERGLASUNGSWEISE

DSO 8

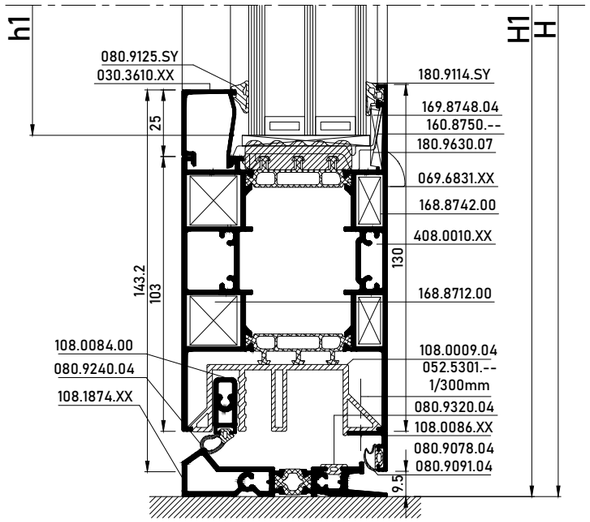

			#	Lm
408.0125.XX			1	B
			1	H
			1	H
408.1028.XX			1	B1 - 79.5
			1	H1 - 26.5
			1	H1 - 26.5
408.0114.XX			1	B1 - 79.5
			1	H - 53
408.0014.XX			1	B1 - 145.5
			1	H1 - 84
			1	H1 - 84
408.0010.XX			1	B1 - 300.5
408.1140.XX			1	B2 - 79.5
030.3610.XX			2	B1 - 300.5
			2	H1 - 314
			2	B1 - 79.5
			2	H3 - 129.5
			2	B2 - 79.5
			2	H - 216
108.0009.04			1	B1 - 300.5
108.0084.00			1	B1 - 145.5
108.0086.XX			1	B1 - 139.5
108.1873.XX			1	B1 - 191.5

BESLAG DEUREN > ZIE "OPENING DOORS"
ACCESSOIRES PORTES > VOIRE "OPENING DOORS"
DOORS GEAR > SEE "OPENING DOORS"
TUERENBESCHLAG > SIEHE "OPENING DOORS"

		#
168.7071.00		4
168.8072.00		4
168.7073.00		2
168.8074.00		2
160.8750.--		12
068.8520.00		2
050.5091.--		4
168.8712.00		8
168.5000.00		16
160.8750.--		2
168.8742.00		8
168.5012.--		2
168.8714.00		3
168.5000.00		6
069.8360.04		1
052.5313.--		4
052.5316.--		4
069.8426.04		2
069.8427.04		2
052.5316.--		4
168.8688.04		10
169.8748.04		19H.F. ...
069.6831.XX		19H.F. ...
080.9078.04		(3xB1)+(4xH1)
080.9381.04		(2xB1)+(4xH1)
080.9125.SY		(2xb1)+(2xh1)
		(2xb2)+(2xh2)
		(2xb3)+(2xh3)
180.9630.07		(4xb1)+(2xb2)
		+(4xh3)
180.9114.SY		(4xb1)+(2xb2)
		+(4xh3)

SECTIONS MASTERLINE 8-Fu

COMBINED DOOR INWARD OPENING WITH AUTOMATIC DRAUGHT EXCLUDER - BOTTOM DOOR RAIL

MASTERLINE 8-Fu

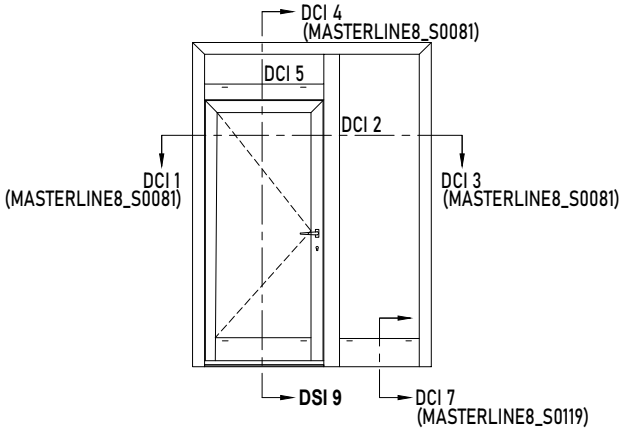

DSI 9

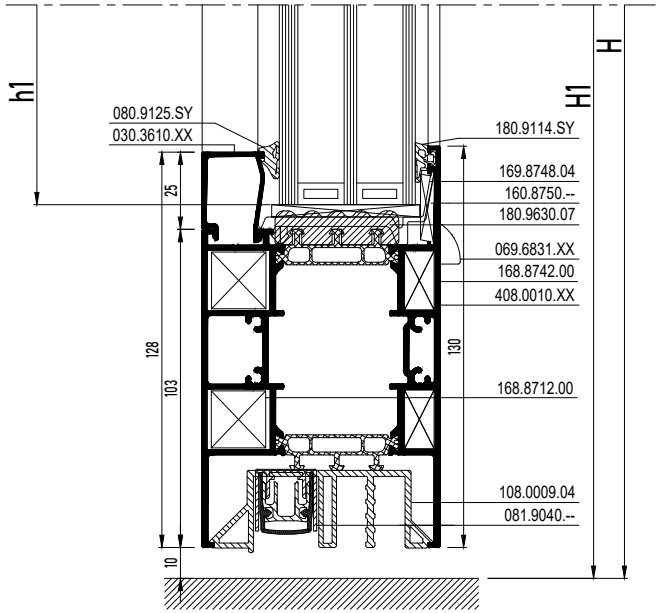

			#	Lm
408.0125.XX			1	B
			1	H
			1	H
408.0026.XX			1	B - 97
			1	H - 43.5
			1	H - 43.5
408.0010.XX			1	B1 - 248.5
408.0029.XX			1	B1 - 69.5
			1	H1 - 21.5
			1	H1 - 21.5
408.0114.XX			1	B1 - 79.5
			1	H - 53
408.1140.XX			1	B2 - 248.5
030.3610.XX			2	B1 - 248.5
			2	H1 - 277
			2	B1 - 79.5
			2	H3 - 129.5
			2	B2 - 79.5
			2	H - 216
108.0009.04			1	B1 - 248.5

BESLAG DEUREN > ZIE "HARDWARE CONFIGURATOR"
ACCESSOIRES PORTES > VOIRE "HARDWARE CONFIGURATOR"
DOORS GEAR > SEE "HARDWARE CONFIGURATOR"
TUERENBESCHLAG > SIEHE "HARDWARE CONFIGURATOR"

b1 = B1 - 264.5
h1 = H1 - 243
b2 = B2 - 95.5
h2= H - 182
h3 = H3 - 95.5
b3 = B1 - 95.5

≥ 50mm
ZIE BEGLAZINGSMETHODE
VOIR METHODE DE VITRAGE
SEE GLAZING METHOD
SIEHE VERGLASUNGSWEISE

		#
168.7071.00		2
168.8072.00		2
168.7073.00		2
168.8074.00		2
160.8750.--		14
168.8712.00		8
160.8750.--		2
168.8742.00		8
168.5012.--		2
168.8714.00		3
168.8742.00		6
169.8513.04		1
052.5316.--		4
169.8510.04		1
069.8426.04		2
052.5316.--		4
168.8688.04		10
169.8748.04		PROD STEPS
069.6831.XX		PROD STEPS
080.9078.04		B1+(2xH1)
080.9091.04		4
080.9381.04		(2xB1)+(4xH1)
080.9125.SY		(2xb1)+(2xh1)
		(2xb2)+(2xh2)
		(2xb3)+(2xh3)
180.9630.07		(4xb1)
		(2xb2)
		(4xh)
080.8442.04		B1+(2xH1)
180.9114.SY		(4xb1)
		(2xb2)
		(4xh)
081.9040.--		PROD STEPS
081.9236.04		4 x (60.5mm)
081.9092.04		1 x (60.5mm)

SECTIONS MASTERLINE 8-Fu

COMBINED DOOR OUTWARD OPENING WITH DOUB. WEATHER STRIP - FIXED LIGHT

MASTERLINE 8-Fu

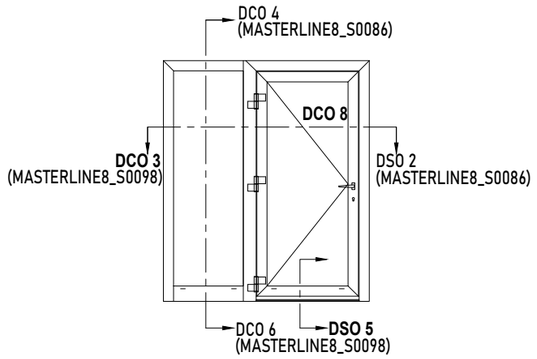

			#	Lm
408.0598.XX			1	B2 + 52.2
			1	H
408.0125.XX			1	B1 - 52.2
			1	H
408.0026.XX			1	B2 - 99.5
			2	H - 67
408.0014.XX			1	B2 - 99.5
408.0769.XX			1	H + 27
408.1142.XX			1	B1 - 120.5
030.3610.XX			2	H - 189
			2	B1 - 78
			2	H - 272
			2	B2 - 245
108.0081.XX			1	B2 - 126
108.1874.XX			1	B2 - 136

BESLAG DEUREN > ZIE "OPENING DOORS"
ACCESSOIRES PORTES > VOIRE "OPENING DOORS"
DOORS GEAR > SEE "OPENING DOORS"
TUERENBESCHLAG > SIEHE "OPENING DOORS"

		#
168.7004.00		1
168.8004.00		1
168.7073.00		6
168.8074.00		6
068.8808.00		2
160.8750.--		8
168.8742.00		6
168.8714.00		3
168.5000.00		6
168.8712.00		4
168.5000.00		8
069.6831.XX		19.F. ...
169.8748.04		19.F. ...
069.8748.00		19.F. ...
052.5317.--		1/300mm
069.8360.04		1
052.5313.--		4
052.5316.--		4
069.8426.04		2
069.8427.04		2
052.5316.--		4
080.9320.04		B2 - 93.5
080.9078.04		(3xB)+(6xH)
080.9091.04		6
080.9240.04		19.F. ...
080.9125.SY		(2xb1)+(2xb2)
		(2xh1)+(2xh2)
180.9114.SY		(2xb1)+(2xb2)
		(2xh1)+(2xh2)
180.9630.07		(2xb1)+(2xb2)
		(2xh1)+(2xh2)

DCO 8

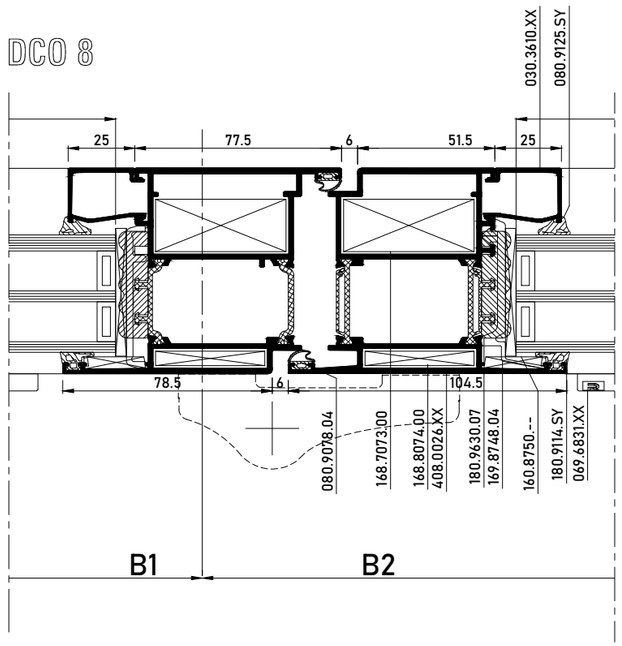

DSO 5

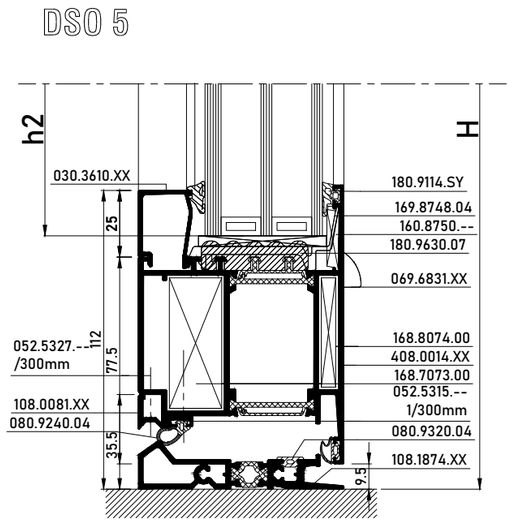

b1 = B1 - 93.5
b2 = B2 - 261
h1 = H - 155
h2 = H - 238



SECTIONS MASTERLINE 8-Fu

DOOR INWARD OPENING WITH BRUSH

MASTERLINE 8-Fu

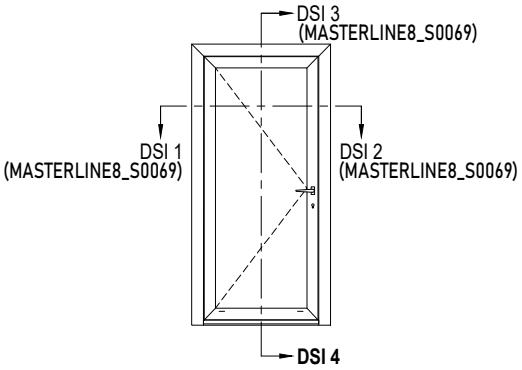

			#	Lm
408.0898.XX			1	B
			1	H
			1	H
408.0026.XX			2	B-97
			2	H-58.5
030.3610.XX			2	B-252
			2	H-263.5
108.0030.XX			1	B - 139

b = B - 268

h= H - 229.5

≥ 50mm

ZIE BEGLAZINGSMETHODE
VOIR METHODE DE VITRAGE
SEE GLAZING METHOD
SIEHE VERGLASUNGSWEISE

BESLAG DEUREN > ZIE "HARDWARE CONFIGURATOR"
ACCESSOIRES PORTES > VOIRE "HARDWARE CONFIGURATOR"
DOORS GEAR > SEE "HARDWARE CONFIGURATOR"
TUERENBESCHLAG > SIEHE "HARDWARE CONFIGURATOR"

		#
168.7071.00		2
168.8072.00		2
168.7073.00		4
168.8074.00		4
160.8750.--		4
169.8748.04		4
052.5315.--		1/300mm
069.6831.XX		PROD STEPS
169.8513.04		1
052.5316.--		4
169.8510.04		1
069.8426.04		2
052.5316.--		4
080.9078.04		2xB + 4xH
080.9091.04		2
080.9125.SY		2xb + 2xh
180.9114.SY		2xb + 2xh
180.9630.07		2xb + 2xh
081.9236.04		4 x (60.5mm)
081.9141.04		PROD STEPS
081.9092.04		1 x (60.5mm)

DSI 4

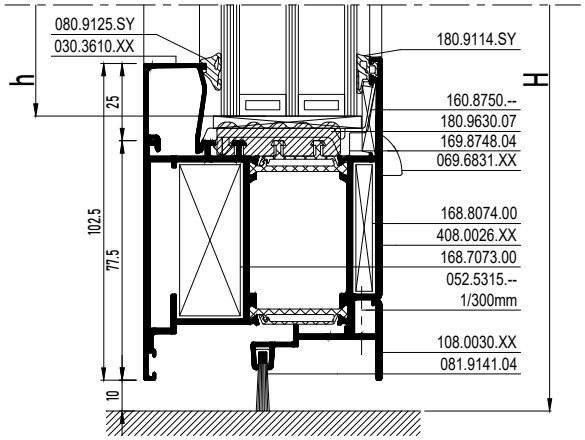

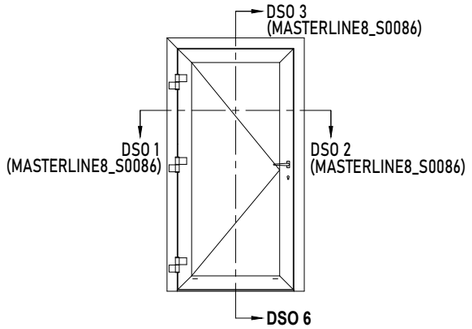

DSO 6

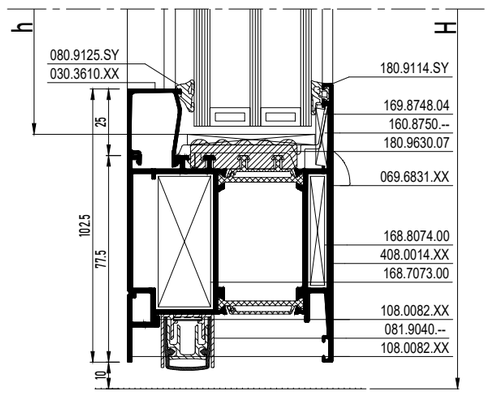

			#	Lm
408.0869.XX			1	B
			1	H
			1	H
408.0014.XX			2	B - 97
			2	H - 58.5
030.3610.XX			2	B - 252
			2	H - 263.5
108.0082.XX			1	B - 139

b = B - 268
h1= H - 229.5

ZIE BEGLAZINGSMETHODE VOIR METHODE DE VITRAGE SEE GLAZING METHOD SIEHE VERGLASUNGSWEISE

BESLAG DEUREN > ZIE HARDWARE CONFIGURATOR
ACCESSOIRES PORTES > VOIRE HARDWARE CONFIGURATOR
DOORS GEAR > SEE HARDWARE CONFIGURATOR
TUERENBESCHLAG > SIEHE HARDWARE CONFIGURATOR

		#
168.7071.00		2
168.8072.00		2
168.7073.00		4
168.8074.00		4
160.8750.--		4
169.8748.04		PROD STEPS
052.5315.--		1/300mm
069.6831.XX		PROD STEPS
169.8513.04		1
052.5316.--		4
169.8510.04		1
069.8426.04		2
052.5316.--		4
081.9040.--		PROD STEPS
080.9078.04		(2xB)+(4xH)
080.9091.04		2
080.9125.SY		(2xb)+(2xh)
180.9114.SY		(2xb)+(2xh)
180.9630.07		(2xb)+(2xh)
081.9040.--		PROD STEPS
081.9236.04		4 x (60.5mm)
081.9092.04		1 x (60.5mm)

SECTIONS MASTERLINE 8-Fu

DOOR INWARD OPENING WITH BRUSH - BOTTOM DOOR RAIL

MASTERLINE 8-Fu

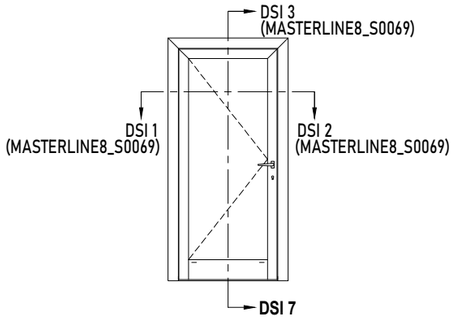

DSI 7

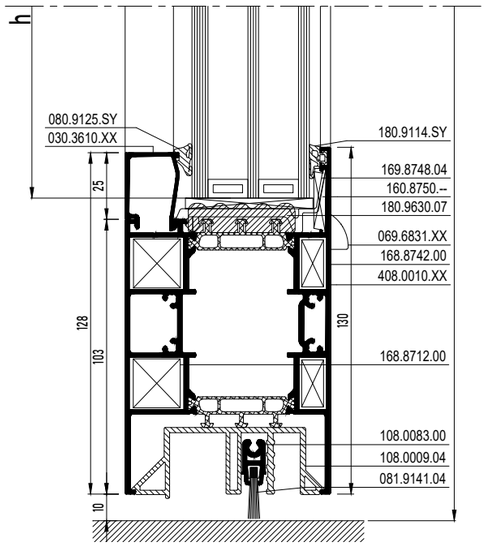

			#	Lm
408.0898.XX			1	B
			1	H
			1	H
408.0026.XX			1	B - 97
			1	H - 58.5
			1	H - 58.5
408.0010.XX			1	B - 252
030.3610.XX			2	B - 252
			2	H - 289
108.0009.04			1	B - 252
108.0083.00			1	B - 133

b = B - 268

h= H - 255

≥ 50mm
ZIE BEGLAZINGSMETHODE
VOIR METHODE DE VITRAGE
SEE GLAZING METHOD
SIEHE VERGLASUNGSWEISE

BESLAG DEUREN > ZIE "HARDWARE CONFIGURATOR"
ACCESSOIRES PORTES > VOIRE "HARDWARE CONFIGURATOR"
DOORS GEAR > SEE "HARDWARE CONFIGURATOR"
TUERENBESCHLAG > SIEHE "HARDWARE CONFIGURATOR"

		#
168.7071.00		2
168.8072.00		2
168.7073.00		2
168.8074.00		2
160.8750.--		2
168.8712.00		4
160.8750.--		2
168.8742.00		4
168.5012.--		2
169.8748.04		PROD STEPS
069.6831.XX		PROD STEPS
169.8513.04		1
052.5316.--		4
069.8426.04		2
052.5316.--		4
080.9078.04		3xB + 4xH
080.9091.04		2
080.9125.SY		2xb + 2xh
180.9114.SY		2xb + 2xh
180.9630.07		2xb + 2xh
081.9236.04		4 x (60.5mm)
081.9141.04		PROD STEPS
081.9092.04		2 x (60.5mm)

SECTIONS MASTERLINE 8-Fu

DOOR OUTWARD OPENING WITH AUTOMATIC DRAUGHT EXCLUDER - BOTTOM DOOR RAIL

MASTERLINE 8-Fu

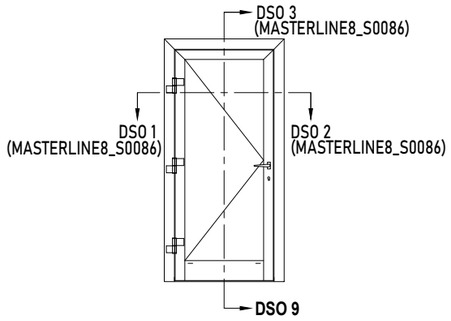

DSO 9

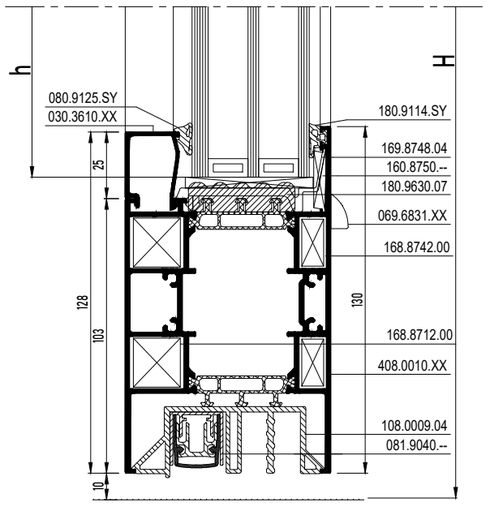

			#	L_m
408.0869.XX			1	B
			1	H
			1	H
408.0014.XX			1	B - 97
			1	H - 58.5
			1	H - 58.5
408.0010.XX			1	B - 252
030.3610.XX			2	B - 252
			2	H - 292
108.0009.04			1	B - 252

b = B - 268
h = H - 258

≥ 50mm ZIE BEGLAZINGSMETHODE VOIR METHODE DE VITRAGE SEE GLAZING METHOD SIEHE VERGLASUNGSWEISE

BESLAG DEUREN > ZIE HARDWARE CONFIGURATOR
ACCESSOIRES PORTES > VOIRE HARDWARE CONFIGURATOR
DOORS GEAR > SEE HARDWARE CONFIGURATOR
TUERENBESCHLAG > SIEHE HARDWARE CONFIGURATOR

		#
168.7071.00		2
168.8072.00		2
168.7073.00		4
168.8072.00		4
160.8750.--		4
168.8712.00		4
160.8750.--		2
168.8742.00		4
168.5012.--		2
169.8748.04		PROD STEPS
052.5315.--		1/300mm
069.6831.XX		PROD STEPS
169.8513.04		1
052.5316.--		4
169.8510.04		1
069.8426.04		2
052.5316.--		4
081.9040.--		PROD STEPS
080.9078.04		(2xB)+(4xH)
080.9091.04		2
080.9125.SY		(2xb)+(2xh)
180.9114.SY		(2xb)+(2xh)
180.9630.07		(2xb)+(2xh)
168.8688.04		4
081.9092.04		1 x (60.5mm)
081.9236.04		4 x (60.5mm)

SECTIONS MASTERLINE 8-Fu

DOUBLE CASEMENT DOOR INWARD OPEN. WITH BRUSH

MASTERLINE 8-Fu

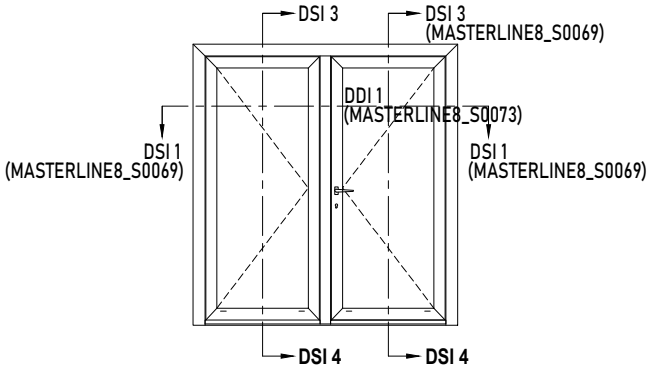

DSI 4

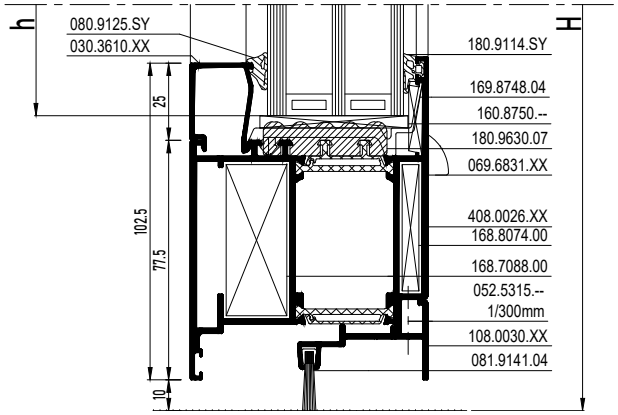

			#	Lm
408.0898.XX			1	B
			1	H
			1	H
408.0026.XX			2	B1 - 51.5
			2	B2 - 51.5
			4	H - 58.5
108.1015.XX			1	H - 79.5
030.3610.XX			2	B1 - 206.5
			2	B2 - 206.5
			4	H - 263.5
108.0030.XX			1	B1 - 93.5
			1	B2 - 93.5

b1 = B1 - 222.5
b2 = B2 - 222.5
h = h - 229.5

≥ 50mm
ZIE BEGLAZINGSMETHODE
VOIR METHODE DE VITRAGE
SEE GLAZING METHOD
SIEHE VERGLASUNGSWEISE

BESLAG DEUREN > ZIE "HARDWARE CONFIGURATOR"
ACCESSOIRES PORTES > VOIRE "HARDWARE CONFIGURATOR"
DOORS GEAR > SEE "HARDWARE CONFIGURATOR"
TUERENBESCHLAG > SIEHE "HARDWARE CONFIGURATOR"

		#
168.7071.00		2
168.8072.00		2
168.7073.00		6
168.8074.00		8
168.7088.00		2
160.8750.--		8
069.8515.04		1
052.5312.--		1
069.6831.XX		PROD STEPS
169.8748.04		PROD STEPS
169.8513.04		1
052.5316.--		4
069.8426.04		4
052.5316.--		8
052.5315.--		1/300mm
052.5318.--		1/300mm
080.9381.04		(2xh)
080.9078.04		(2xB)+(6xH)
080.9091.04		3
080.9125.SY		(2xb1)+(2xb2)
		+(4xh)
180.9114.SY		(2xb1)+(2xb2)
		+(4xh)
180.9630.07		(2xb1)+(2xb2)
		+(4xh)
081.9236.04		6 x (60.5mm)
081.9141.04		PROD STEPS
081.9092.04		2 x (60.5mm)

SECTIONS MASTERLINE 8-Fu

DOUBLE CASEMENT DOOR OUTWARD OPENING WITH AUTOMATIC DRAUGHT EXCLUDER

MASTERLINE 8-Fu

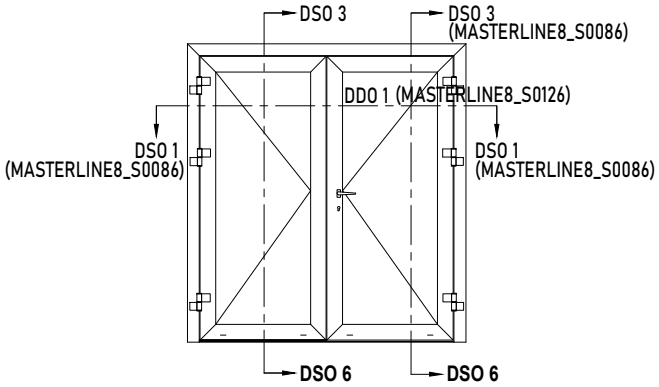

			#	Lm
408.0869.XX			1	B
			1	H
			1	H
408.0014.XX			2	B1 - 51.5
			2	B2 - 51.5
			4	H - 58.5
108.1815.XX			1	H - 79.5
030.3610.XX			2	B1 - 206.5
			2	B2 - 206.5
			4	H - 263.5
108.0082.XX			1	B1 - 93.5
			1	B2 - 93.5

b1 = B1 - 222.5
b2 = B2 - 222.5
h = H - 229.5

≥ 50mm
ZIE BEGLAZINGSMETHODE
VOIR METHODE DE VITRAGE
SEE GLAZING METHOD
SIEHE VERGLASUNGSWEISE

BESLAG DEUREN > ZIE HARDWARE CONFIGURATOR
ACCESSOIRES PORTES > VOIRE HARDWARE CONFIGURATOR
DOORS GEAR > SEE HARDWARE CONFIGURATOR
TUERENBESCHLAG > SIEHE HARDWARE CONFIGURATOR

		#
168.7071.00		2
168.8072.00		2
168.7073.00		6
168.8072.00		8
168.7088.00		2
160.8750.--		8
069.8518.04		1
052.5312.--		1
069.6831.XX		PROD STEPS
169.8748.04		PROD STEPS
169.8513.04		1
052.5316.--		2
169.8510.04		2
069.8426.04		4
052.5316.--		8
052.5315.--		1/300mm
052.5318.--		1/300mm
080.9381.04		(2xh)
080.9078.04		(2xB)+(6xH)
080.9091.04		3
080.9126.SY		(2xb1)+(2xb2)
		+(4xh)
180.9114.SY		(2xb1)+(2xb2)
		+(4xh)
180.9630.07		(2xb1)+(2xb2)
		+(4xh)
081.9040.--		PROD STEPS
081.9236.04		6 x (60.5mm)

DSO 6

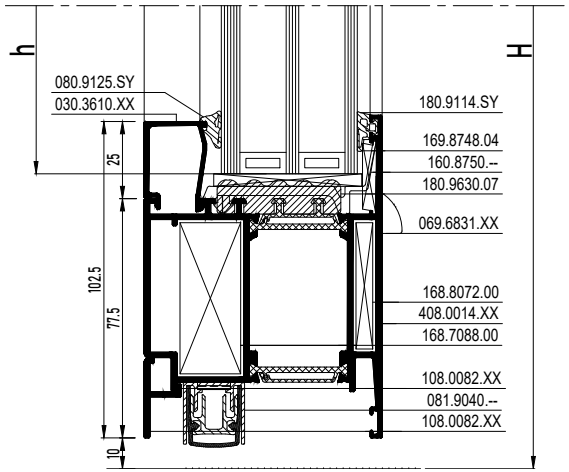

SECTIONS MASTERLINE 8-Fu

DOUBLE CASEMENT DOOR INWARD OPEN. WITH BRUSH - BOTTOM DOOR RAIL

MASTERLINE 8-Fu

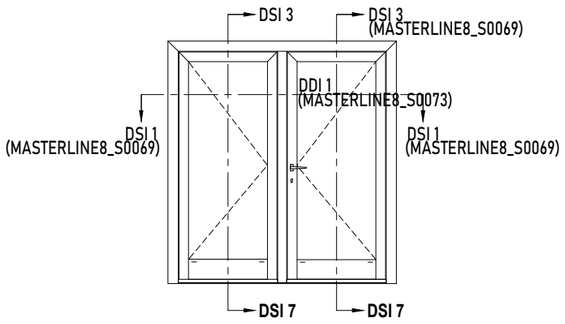

b1 = B1-222.5
b2 = B2-222.5
h = H - 255

≥ 50mm
ZIE BEGLAZINGSMETHODE
VOIR METHODE DE VITRAGE
SEE GLAZING METHOD
SIEHE VERGLASUNGSWEISE

			#	Lm
408.0898.XX			1	B
			1	H
			1	H
408.0026.XX			1	B1 - 51.5
			1	B2 - 51.5
			2	H - 58.5
			2	H - 58.5
408.0010.XX			2	B1 - 206.5
108.1015.XX			1	H - 79.5
030.3610.XX			2	B1 - 206.5
			2	B2 - 206.5
			4	H - 289
108.0009.04			1	B1 - 206.5
			1	B2 - 206.5
108.0083.00			1	B1 - 87.5
			1	B2 - 87.5

		#
168.7071.00		2
168.8072.00		2
168.7073.00		6
168.8074.00		8
168.7088.00		2
160.8750.--		4
168.8712.00		8
160.8750.--		4
168.8742.00		8
168.5012.--		4
069.8515.04		1
052.5312.--		1
069.6831.XX		PROD STEPS
169.8748.04		PROD STEPS
169.8513.04		1
052.5316.--		4
069.8426.04		4
052.5316.--		8
052.5315.--		1/300mm
052.5318.--		1/300mm
080.9381.04		(2xh)
080.9078.04		(2xB)+(6H)
080.9091.04		3
080.9125.SY		(2xb1)+(2xb2)
		+(4xh)
180.9114.SY		(2xb1)+(2xb2)
		+(4xh)
180.9630.07		(2xb1)+(2xb2)
		+(4xh)
081.9236.04		6 x (60.5mm)
081.9141.04		PROD STEPS
081.9092.04		2 x (60.5mm)

BESLAG DEUREN > ZIE "HARDWARE CONFIGURATOR"
ACCESSOIRES PORTES > VOIRE "HARDWARE CONFIGURATOR"
DOORS GEAR > SEE "HARDWARE CONFIGURATOR"
TUERENBESCHLAG > SIEHE "HARDWARE CONFIGURATOR"

DSI 7

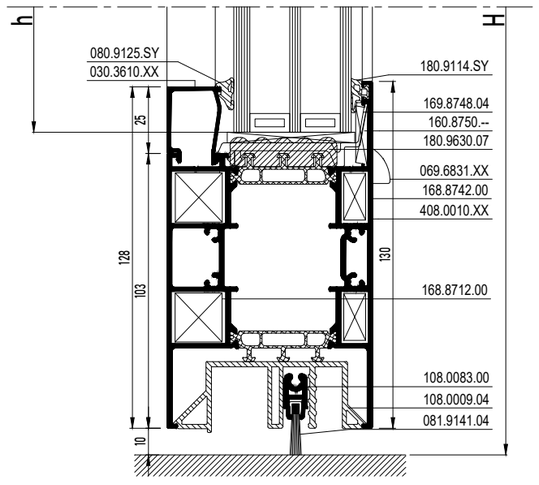

SECTIONS MASTERLINE 8-Fu

DOUBLE CASEMENT DOOR OUTWARD OPENING WITH AUTOMATIC DRAUGHT EXCLUDER - BOTTOM DOOR RAIL

MASTERLINE 8-Fu

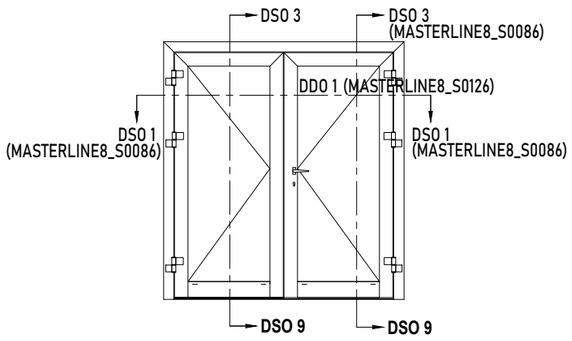

DSO 9

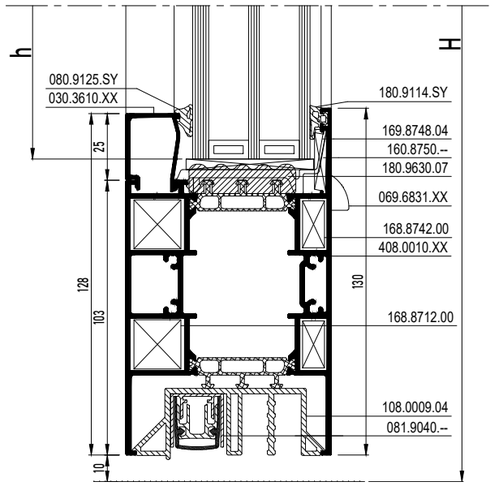

			#	Lm
408.0869.XX			1	B
			1	H
			1	H
408.0014.XX			1	B1 - 51.5
			1	B2 - 51.5
			2	H - 58.5
			2	H - 58.5
408.0010.XX			1	B1 - 206.5
			1	B2 - 206.5
108.1815.XX			1	H - 82.5
030.3610.XX			2	B1 - 206.5
			2	B2 - 206.5
			4	H - 292
108.0009.04			1	B1 - 206.5
			1	B2 - 206.5

b1 = B1 - 222.5
b2 = B2 - 222.5
h = H - 258

≥40mm
ZIE BEGLAZINGSMETHODE
VOIR METHODE DE VITRAGE
SEE GLAZING METHOD
SIEHE VERGLASUNGSWEISE

BESLAG DEUREN › ZIE HARDWARE CONFIGURATOR
ACCESSOIRES PORTES › VOIRE HARDWARE CONFIGURATOR
DOORS GEAR › SEE HARDWARE CONFIGURATOR
TUERENBESCHLAG › SIEHE HARDWARE CONFIGURATOR

	#
168.7071.00	2
168.8072.00	2
168.7073.00	6
168.8074.00	8
168.7088.00	2
160.8750.--	4
168.8712.00	8
160.8750.--	4
168.8742.00	8
168.5012.--	4
069.8518.04	1
052.5312.--	1
069.6831.XX	PROD STEPS
169.8748.04	PROD STEPS
169.8513.04	1
052.5316.--	4
169.8510.04	2
069.8426.04	4
052.5316.--	8
052.5315.--	1/300mm
052.5318.--	1/300mm
052.5317.--	1/400mm
080.9381.04	(2xh)
081.9040.--	PROD STEPS
080.9078.04	(2xB)+(6xH)
080.9091.04	3
080.9126.SY	(2xb1)+(2xb2)
	+(4xh)
180.9114.SY	(2xb1)+(2xb2)
	+(4xh)
180.9630.07	(2xb1)+(2xb2)
	+(4xh)
081.9236.04	6 x (60.5mm)

SECTIONS MASTERLINE 8-Fu

Z-T DOOR INWARD OPENING WITH BRUSH

MASTERLINE 8-Fu

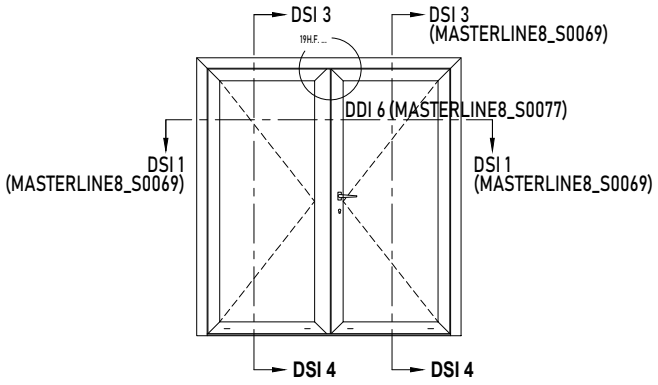

DSI 4

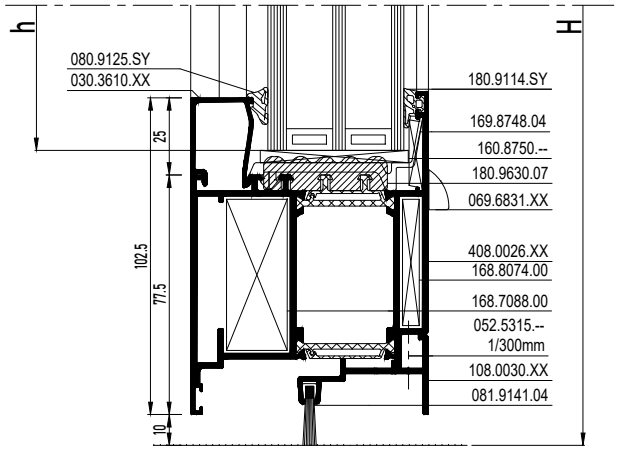

			#	Lm
408.0898.XX			1	B
			1	H
			1	H
408.0026.XX			2	B1 - 38.5
			2	B2 - 38.5
			1	H - 58.5
			2	H - 58.5
408.0014.XX			1	H - 58.5
030.3610.XX			2	B1 - 193.5
			2	B2 - 193.5
			4	H - 263.5
108.0030.XX			1	B1 - 59.5
			1	B2 - 80.5

b1 = B1 - 209.5
b2 = B2 - 209.5
h = h - 229.5



ZIE BEGLAZINGSMETHODE
VOIR METHODE DE VITRAGE
SEE GLAZING METHOD
SIEHE VERGLASUNGSWEISE

BESLAG DEUREN > ZIE "HARDWARE CONFIGURATOR"
ACCESSOIRES PORTES > VOIRE "HARDWARE CONFIGURATOR"
DOORS GEAR > SEE "HARDWARE CONFIGURATOR"
TUERENBESCHLAG > SIEHE "HARDWARE CONFIGURATOR"

	#
168.7071.00	2
168.8072.00	2
168.7073.00	6
168.8074.00	8
168.7088.00	2
160.8750.--	8
069.8511.04	1
069.8512.04	1
069.6831.XX	PROD STEPS
169.8748.04	PROD STEPS
169.8513.04	1
052.5316.--	4
069.8426.04	4
052.5316.--	8
052.5315.--	1/300mm
080.9078.04	(2xB)+(6xH)
080.9091.04	3
080.9125.SY	(2xb1)+(2xb2)
	+(4xh)
180.9114.SY	(2xb1)+(2xb2)
	+(4xh)
180.9630.07	(2xb1)+(2xb2)
	+(4xh)
081.9236.04	6 x (60.5mm)
081.9141.04	PROD STEPS
081.9092.04	2 x (60.5mm)

SECTIONS MASTERLINE 8-Fu

Z-T DOOR OUTWARD OPENING WITH AUTOMATIC DRAUGHT EXCLUDER

MASTERLINE 8-Fu

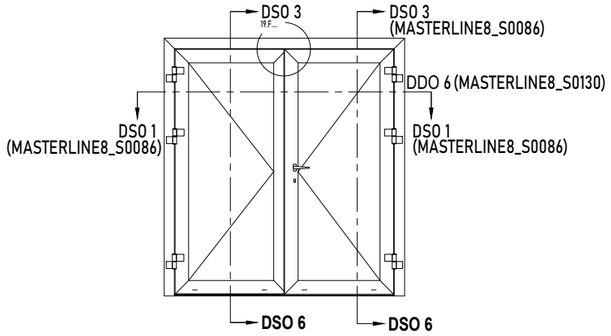

DSO 6

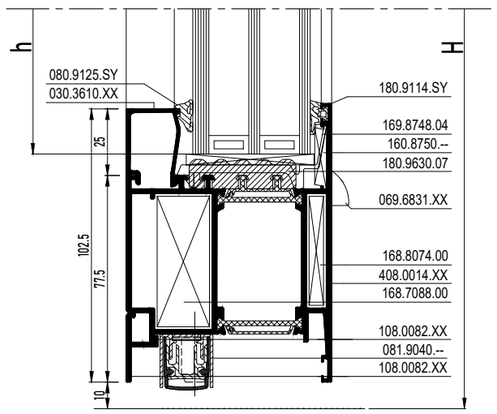

			#	Lm
408.0869.XX			1	B
			1	H
			1	H
408.0014.XX			2	B1 - 38.5
			2	B2 - 38.5
			3	H - 58.5
408.0026.XX			1	H - 58.5
030.3610.XX			2	B1 - 193.5
			2	B2 - 193.5
			4	H - 263.5
108.0082.XX			1	B1 - 59.5
			1	B2 - 80.5

b1 = B1 - 209.5
b2 = B2 - 209.5
h = H - 229.5

50mm
ZIE BEGLAZINGSMETHODE
VOIR METHODE DE VITRAGE
SEE GLAZING METHOD
SIEHE VERGLASUNGSWEISE

BESLAG DEUREN > ZIE HARDWARE CONFIGURATOR
ACCESSOIRES PORTES > VOIRE HARDWARE CONFIGURATOR
DOORS GEAR > SEE HARDWARE CONFIGURATOR
TUERENBESCHLAG > SIEHE HARDWARE CONFIGURATOR

		#
168.7071.00		2
168.8072.00		2
168.7073.00		6
168.8074.00		6
168.7088.00		2
160.8750.--		8
069.8511.04		1
069.8512.04		1
069.6831.XX		PROD STEPS
169.8748.04		PROD STEPS
169.8513.04		1
052.5316.--		4
169.8510.04		2
069.8426.04		4
052.5316.--		8
052.5315.--		1/300mm
080.9078.04		(2xB)+(6xH)
080.9091.04		3
080.9125.SY		(2xb1)+(2xb2)
		+(4xh)
180.9114.SY		(2xb1)+(2xb2)
		+(4xh)
180.9630.07		(2xb1)+(2xb2)
		+(4xh)
081.9040.--		PROD STEPS
081.9236.04		6 x (60.5mm)

SECTIONS MASTERLINE 8-Fu

Z-T DOOR OUTWARD OPENING WITH AUTOMATIC DRAUGHT EXCLUDER - BOTTOM DOOR RAIL

MASTERLINE 8-Fu

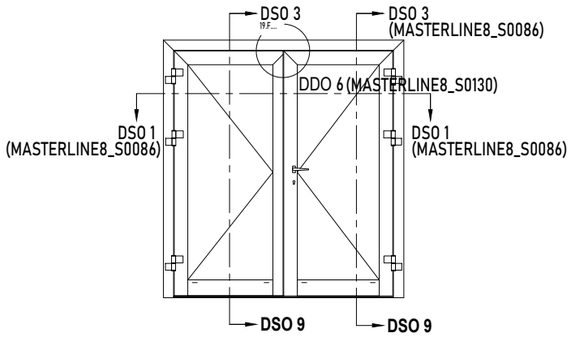

			#	Lm
408.0869.XX			1	B
			1	H
			1	H
408.0014.XX			1	B1 - 38.5
			1	B2 - 38.5
			2	H - 58.5
			1	H - 58.5
408.0026.XX			1	H - 58.5
408.0010.XX			1	B1 - 193.5
			1	B2 - 193.5
030.3610.XX			2	B1 - 193.5
			2	B2 - 193.5
			4	H - 292
108.0009.04			1	B1 - 193.5
			1	B2 - 193.5

b1 = B1 - 209.5
b2 = B2 - 209.5
h = H - 258

≥ 50mm
ZIE BEGLAZINGSMETHODE
VOIR METHODE DE VITRAGE
SEE GLAZING METHOD
SIEHE VERGLASUNGSWEISE

BESLAG DEUREN > ZIE HARDWARE CONFIGURATOR
ACCESSOIRES PORTES > VOIRE HARDWARE CONFIGURATOR
DOORS GEAR > SEE HARDWARE CONFIGURATOR
TUERENBESCHLAG > SIEHE HARDWARE CONFIGURATOR

		#
168.7071.00		2
168.8072.00		2
168.7073.00		6
168.8074.00		8
168.7088.00		2
160.8750.--		4
168.8712.00		8
160.8750.--		4
168.8742.00		8
168.5012.--		4
069.8511.04		1
069.8512.04		1
069.6831.XX		PROD STEPS
169.8748.04		PROD STEPS
169.8513.04		1
052.5316.--		4
169.8510.04		2
069.8426.04		4
052.5316.--		8
081.9040.--		PROD STEPS
052.5315.--		1/300mm
052.5317.--		1/400mm
080.9381.04		(2xh)
080.9078.04		(2xB)+(6xH)
080.9091.04		3
080.9240.04		19H.F. ...
080.9125.SY		(2xb1)+(2xb2)
		+(4xh)
180.9114.SY		(2xb1)+(2xb2)
		+(4xh)
180.9630.07		(2xb1)+(2xb2)
		+(4xh)
081.9236.04		6 x (60.5mm)

DSO 9

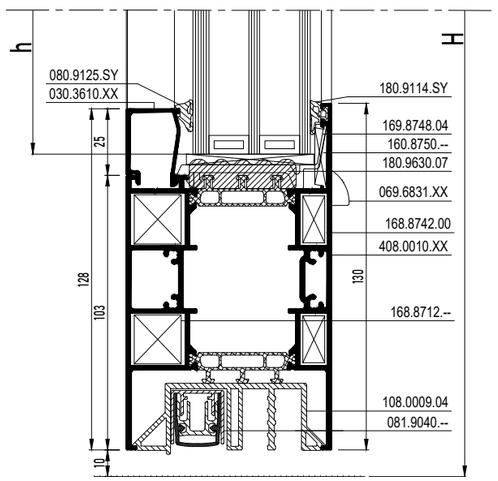

SECTIONS MASTERLINE 8-Fu

COMBINED DOOR OUTWARD OPENING WITH AUTOMATIC DRAUGHT EXCLUDER

MASTERLINE 8-Fu

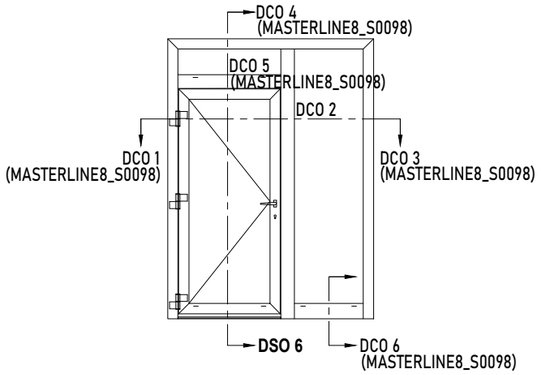

b1 = B1 - 316.5
h1 = H1 - 240.5
b2 = B2 - 95.5
h2 = H - 155
h3 = H3 - 95.5
b3 = B1 - 95.5

≥ 10mm
ZIE BEGLAZINGSMETHODE
VOIR METHODE DE VITRAGE
SEE GLAZING METHOD
SIEHE VERGLASUNGSWEISE

		#	Lm
408.0125.XX		1	B
		1	H
		1	H
408.0014.XX		2	B1 - 145.5
		2	H1 - 69.5
408.1028.XX		1	B1 - 79.5
		1	H1 - 26.5
		1	H1 - 26.5
408.0114.XX		1	B1 - 79.5
		1	H - 53
408.1142.XX		1	B2 - 79.5
030.3610.XX		2	B1 - 300.5
		2	H1 - 274.5
		2	B1 - 79.5
		2	H3 - 129.5
		2	B2 - 79.5
		2	H - 189
108.0082.XX		1	B - 187.5

BESLAG DEUREN > ZIE HARDWARE CONFIGURATOR
ACCESSOIRES PORTES > VOIRE HARDWARE CONFIGURATOR
DOORS GEAR > SEE HARDWARE CONFIGURATOR
TUERENBESCHLAG > SIEHE HARDWARE CONFIGURATOR

		#
168.7073.00		4
168.8074.00		4
168.7004.00		2
168.8004.00		2
160.8750.--		14
068.8520.00		2
050.5091.--		4
168.8714.00		3
168.8712.00		4
168.8688.04		10
168.8742.00		10
168.5012.--		7
169.8748.04		PROD STEPS
069.6831.XX		PROD STEPS
169.8513.04		1
052.5316.--		4
169.8510.04		1
069.8426.04		2
052.5316.--		4
052.5315.--		1/300mm
052.5329.--		1/300mm
081.9040.--		PROD STEPS
080.9078.04		(3xB1)+(4xH1)
080.9091.04		2
080.9381.04		(2xB1)+(4xH1)
080.9125.SY		(2xb1)+(2xh1)
		(2xb2)+(2xh2)
		(2xb3)+(2xh3)
180.9630.07		(4xb1)+(2xb2)
		+(4xh)
180.9114.SY		(4xb1)+(2xb2)
		+(4xh)
081.9236.04		4 x (60.5mm)
081.9092.04		1 x (60.5mm)

DSO 6

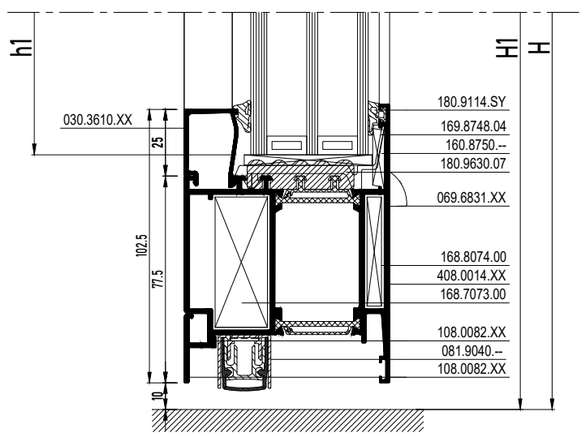

SECTIONS MASTERLINE 8-Fu

COMBINED DOOR INWARD OPENING WITH BRUSH - BOTTOM DOOR RAIL

MASTERLINE 8-Fu

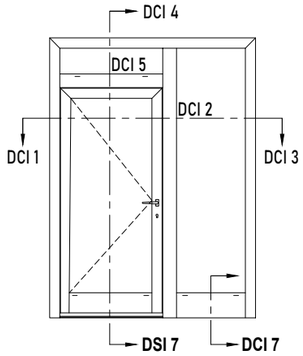

b1 = B1 - 264.5
h1 = H1 - 240
b2 = B2 - 95.5
h2= H - 182
h3 = H3 - 95.5
b3 = B1 - 95.5

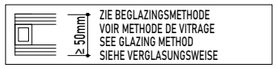

			#	Lm
408.0125.XX			1	B
			1	H
			1	H
408.0026.XX			1	B1 - 93.5
			1	H1 - 43.5
			1	H1 - 43.5
408.0010.XX			1	B1 - 248.5
408.0029.XX			1	B1 - 69.5
			1	H1 - 21.5
			1	H1 - 21.5
408.0114.XX			1	B1 - 79.5
			1	H - 53
408.1140.XX			1	B2 - 79.5
030.3610.XX			2	B1 - 248.5
			2	H1 - 274
			2	B1 - 79.5
			2	H3 - 129.5
			2	B2 - 79.5
			2	H - 216
108.0009.04			1	B1 - 248.5
108.0083.00			1	B1 - 136.5

BESLAG DEUREN > ZIE "OPENING DOORS"
ACCESSOIRES PORTES > VOIRE "OPENING DOORS"
DOORS GEAR > SEE "OPENING DOORS"
TUERENBESCHLAG > SIEHE "OPENING DOORS"

		#
168.7071.00		2
168.8072.00		2
168.7073.00		2
168.8074.00		2
160.8750.--		2
168.8712.00		8
168.5000.00		16
160.8750.--		2
168.8742.00		8
168.5012.--		2
168.8714.00		3
168.5000.00		6
168.8688.04		10
169.8748.04		19H.F. ...
069.6831.XX		19H.F. ...
069.8426.04		2
052.5316.--		4
169.8513.04		1
052.5316.--		4
187.1142.07		B2 - 79.5
168.8742.00		6
168.5012.--		7
052.5327.--		1/300mm
052.5315.--		1/300mm
080.9078.04		B1+(2xH1)
080.9091.04		2
080.9381.04		(2xB1)+(4xH1)
080.9125.SY		(2xb1)+(2xh1)
		(2xb2)+(2xh2)
		(2xb3)+(2xh3)
180.9630.07		(4xb1)
		(2xb2)
		(4xh3)
081.9236.04		4 x (60.5mm)
081.9092.04		2 x (60.5mm)

DSI 7

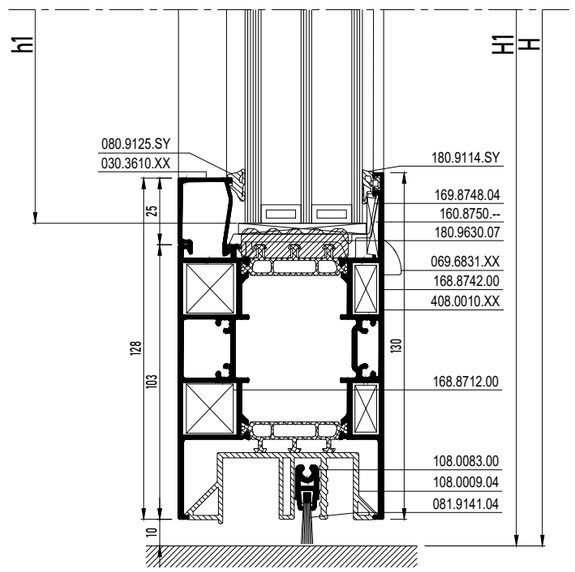

DCI 7

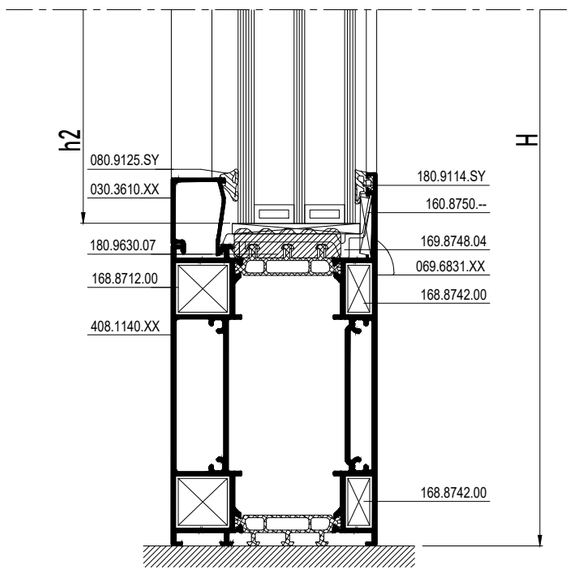

		#
081.9141.04		19H.F. ...
080.8442.04		B1+(2xH1)
180.9114.SY		(4xb1)
		(2xb2)
		(4xh3)

SECTIONS MASTERLINE 8-Fu

COMBINED DOOR OUTWARD OPENING WITH AUTOMATIC DRAUGHT EXCLUDER - BOTTOM DOOR RAIL

MASTERLINE 8-Fu

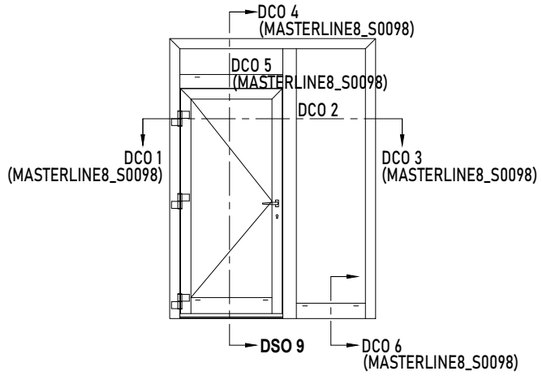

b1 = B1 - 316.5
h1 = H1 - 269
b2 = B2 - 95.5
h2 = H - 182
h3 = H3 - 95.5
b3 = B1 - 95.5

≥ 50mm
ZIE BEGLAZINGSMETHODE
VOIR METHODE DE VITRAGE
SEE GLAZING METHOD
SIEHE VERGLASUNGSWEISE

			#	Lm
408.0125.XX			1	B
			1	H
			1	H
408.1028.XX			1	B1 - 79.5
			1	H1 - 26.5
			1	H1 - 26.5
408.0114.XX			1	B1 - 79.5
			1	H - 53
408.0014.XX			1	B1 - 145.5
			1	H1 - 69.5
			1	H1 - 69.5
408.0010.XX			1	B1 - 300.5
408.1140.XX			1	B2 - 79.5
030.3610.XX			2	B1 - 300.5
			2	H1 - 302.5
			2	B1 - 79.5
			2	H3 - 112.5
			2	B2 - 79.5
			2	H - 216
108.0009.04			1	B1 - 300.5

BESLAG DEUREN > ZIE HARDWARE CONFIGURATOR
ACCESSOIRES PORTES > VOIR HARDWARE CONFIGURATOR
DOORS GEAR > SEE HARDWARE CONFIGURATOR
TUERENBESCHLAG > SIEHE HARDWARE CONFIGURATOR

		#
168.7071.00		4
168.8072.00		4
168.7073.00		2
168.8074.00		2
160.8750.--		12
068.8520.00		2
050.5091.--		4
168.8712.00		4
160.8750.--		2
168.8742.00		4
168.5012.--		2
168.8714.00		3
168.8712.00		4
169.8513.04		1
052.5316.--		4
169.8510.04		1
069.8426.04		2
052.5316.--		4
168.8688.04		10
169.8748.04		PROD STEPS
069.6831.XX		PROD STEPS
081.9040.--		PROD STEPS
080.9078.04		(3xB1)+(4xH1)
080.9381.04		(2xB1)+(4xH1)
080.9125.SY		(2xb1)+(2xh1)
		(2xb2)+(2xh2)
		(2xb3)+(2xh3)
180.9630.07		(4xb1)+(2xb2)
		+(4xh3)
180.9114.SY		(4xb1)+(2xb2)
		+(4xh3)
081.9236.04		4 x (60.5mm)
081.9092.04		1 x (60.5mm)

DSO 9

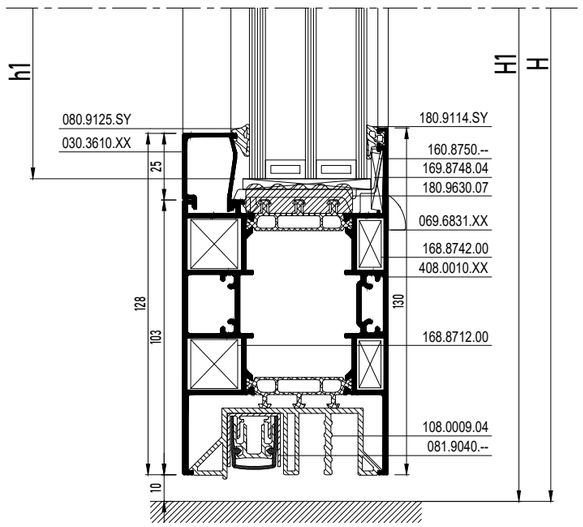

SECTIONS MASTERLINE 8-Fu Panic Door

DBL. CAS. DOOR OUTW. OPENING WITH DOUBLE WEATHER STRIP - DOUBLE PANIC EN179/1125

MASTERLINE 8-Fu

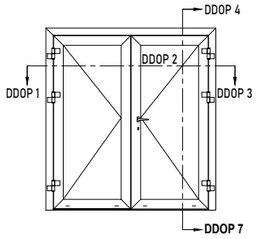

			#	Lm
408.0869.XX			1	B
			1	H
			1	H
408.0014.XX			2	B1 - 51.5
			2	B2 - 51.5
			3	H - 58
408.0016.XX			1	H - 58
108.1815.XX			1	H - 100.5
030.3610.XX			2	B1 - 206.5
			2	B2 - 206.5
			4	H - 263
108.0081.XX			1	B1 - 43.5
			1	B2 - 87.5
108.1874.XX			1	B - 143

b1=B1-222.5	
b2=B2-222.5	
h=H-229.5	

50mm — ZIE BEGLAZINGSMETHODE / VOIR METHODE DE VITRAGE / SEE GLAZING METHOD / SIEHE VERGLASUNGSWEISE

BESLAG DEUREN › ZIE "HARDWARE CONFIGURATOR"
ACCESSOIRES PORTES › VOIRE "HARDWARE CONFIGURATOR"
DOORS GEAR › SEE "HARDWARE CONFIGURATOR"
TUERENBESCHLAG › SIEHE "HARDWARE CONFIGURATOR"

		#
168.7071.00		2
168.8072.00		2
168.7073.00		6
168.8074.00		8
168.7088.00		2
160.8750.--		8
069.8518.04		1
052.5312.--		1
069.6831.XX		PROD STEPS
169.8748.04		PROD STEPS
080.9381.04		(2xh)
052.5327.--		1/300mm
052.5316.--		4
069.8360.04		1
052.5313.--		4
052.5316.--		4
069.8426.04		4
069.8427.04		4
052.5316.--		8
052.5318.--		1/300mm
080.9078.04		(3xB)+(6xH)
080.9091.04		6
080.9240.04		19H.F. ...
080.9320.04		B
080.9125.SY		(2xb1)+(2xb2)
		+(4xh)
180.9114.SY		(2xb1)+(2xb2)
		+(4xh)
180.9630.07		(2xb1)+(2xb2)
		+(4xh)
069.8540.04		1

DDOP 4

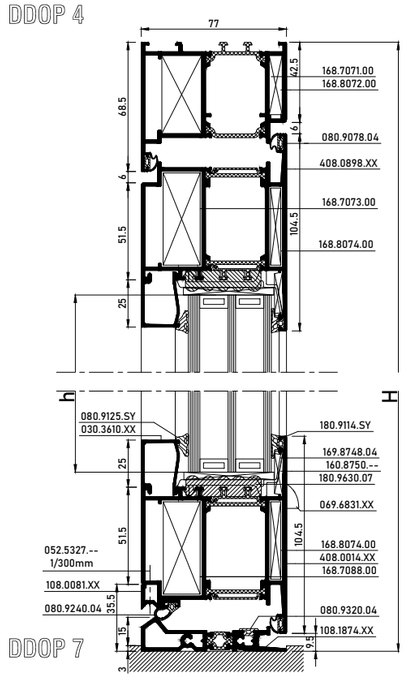

DDOP 7

DDOP 1

DDOP 2

DDOP 3

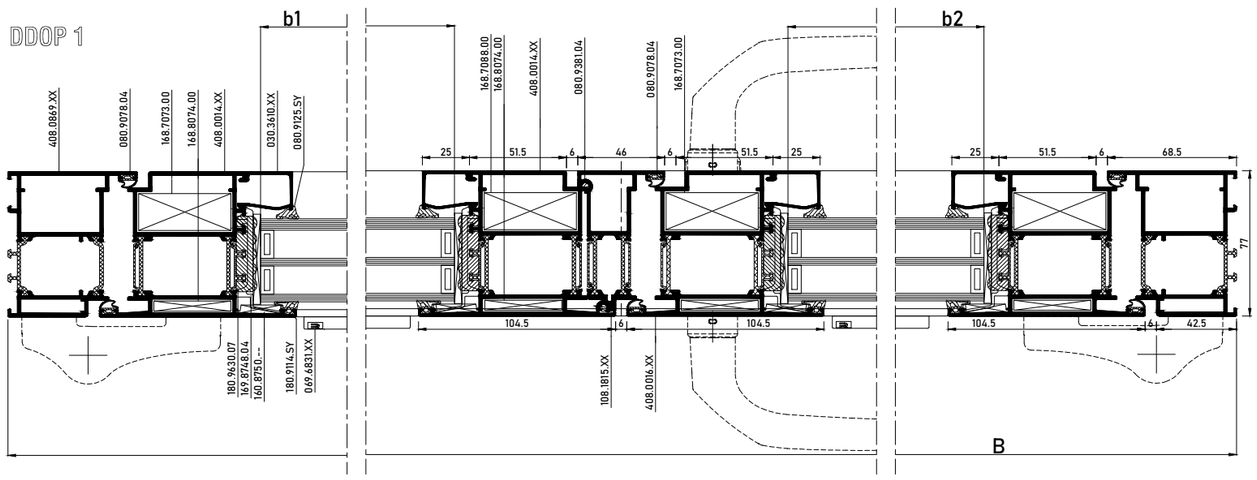

SECTIONS MASTERLINE 8-Fu

DOOR OUTWARD OPENING WITH BRUSH

MASTERLINE 8-Fu

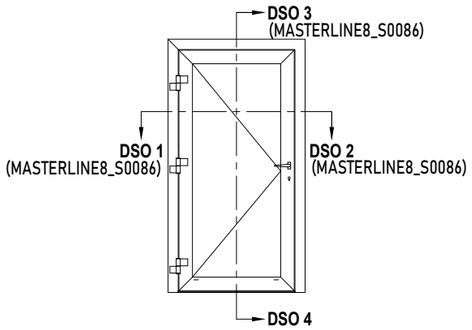

DSO 4

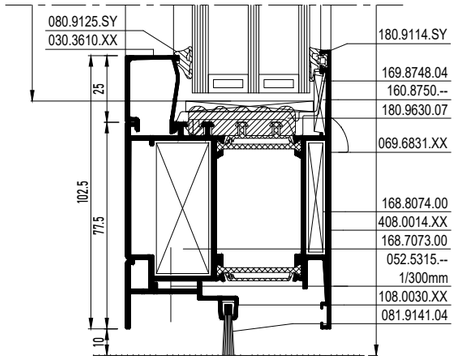

			#	Lm
408.0869.XX			1	B
			1	H
			1	H
408.0014.XX			2	B - 97
			2	H - 58.5
030.3610.XX			2	B - 252
			2	H - 263.5
108.0030.XX			1	B - 139

b = B - 268
h1= H - 229.5

ZIE BEGLAZINGSMETHODE
VOIR METHODE DE VITRAGE
SEE GLAZING METHOD
SIEHE VERGLASUNGSWEISE

BESLAG DEUREN > ZIE HARDWARE CONFIGURATOR
ACCESSOIRES PORTES > VOIRE HARDWARE CONFIGURATOR
DOORS GEAR > SEE HARDWARE CONFIGURATOR
TUERENBESCHLAG > SIEHE HARDWARE CONFIGURATOR

	#
168.7071.00	2
168.8072.00	2
168.7073.00	4
168.8074.00	4
160.8750.--	4
169.8748.04	PROD STEPS
052.5315.--	1/300mm
069.6831.XX	PROD STEPS
169.8513.04	1
052.5316.--	4
069.8426.04	2
052.5316.--	4
080.9078.04	(2xB)+(4xH)
080.9091.04	2
080.9125.SY	(2xb)+(2xh)
180.9114.SY	(2xb)+(2xh)
180.9630.07	(2xb)+(2xh)
081.9236.04	4 x (60.5mm)
081.9141.04	PROD STEPS
081.9092.04	2 x (60.5mm)

SECTIONS MASTERLINE 8-Fu

DOOR OUTWARD OPENING WITH BRUSH - BOTTOM DOOR RAIL

MASTERLINE 8-Fu

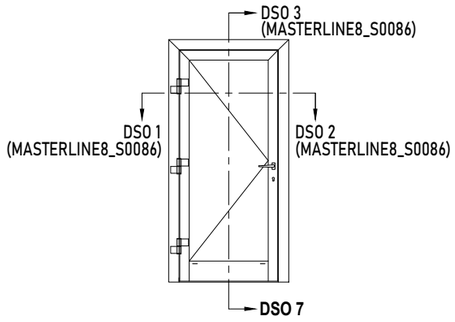

			#	Lm
408.0869.XX			1	B
			1	H
			1	H
408.0014.XX			1	B - 97
			1	H - 58.5
			1	H - 58.5
408.0010.XX			1	B - 252
030.3610.XX			2	B - 252
			2	H - 289
108.0009.04			1	B - 252
108.0083.00			1	B - 133

b = B - 268
h = H - 255

ZIE BEGLAZINGSMETHODE VOIR METHODE DE VITRAGE SEE GLAZING METHOD SIEHE VERGLASUNGSWEISE

BESLAG DEUREN > ZIE HARDWARE CONFIGURATOR
ACCESSOIRES PORTES > VOIR HARDWARE CONFIGURATOR
DOORS GEAR > SEE HARDWARE CONFIGURATOR
TUERENBESCHLAG > SIEHE HARDWARE CONFIGURATOR

	#
168.7071.00	2
168.8072.00	2
168.7073.00	2
168.8074.00	2
160.8750.--	2
168.8712.00	4
160.8750.--	2
168.8742.00	4
168.5012.--	2
169.8748.04	PROD STEPS
052.5315.--	1/300mm
069.6831.XX	PROD STEPS
169.8513.04	1
052.5316.--	4
069.8426.04	2
052.5316.--	4
080.9078.04	(2xB)+(4xH)
080.9091.04	2
080.9125.SY	(2xb)+(2xh)
180.9114.SY	(2xb)+(2xh)
180.9630.07	(2xb)+(2xh)
168.8688.04	4
081.9236.04	4 x (60.5mm)
081.9092.04	2 x (60.5mm)
081.9141.04	PROD STEPS

DSO 7

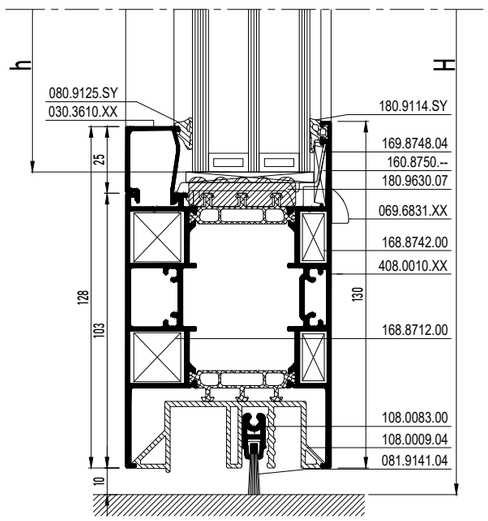

SECTIONS MASTERLINE 8-Fu Panic Door

DBL. CAS. DOOR OUTW. OPENING WITH DOUBLE WEATHER STRIP - BOTTOM DOOR RAIL - DOUBLE PANIC EN179/1125

MASTERLINE 8-Fu

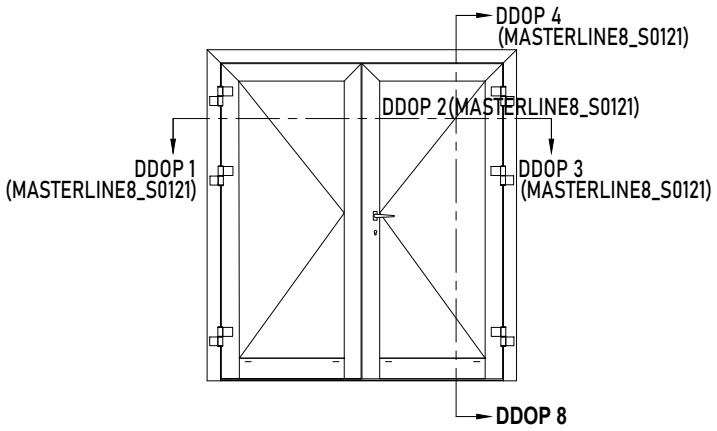

			#	Lm
408.0869.XX			1	B
			1	H
			1	H
408.0014.XX			1	B1 - 51.5
			1	B2 - 51.5
			2	H - 73
			1	H - 73
408.0016.XX			1	H - 73
408.0010.XX			1	B1 - 206.5
			1	B2 - 206.5
108.1815.XX			1	H - 94
030.3610.XX			2	B1 - 206.5
			2	B2 - 206.5
			4	H - 303.5
108.0009.04			1	B1 - 206.5
			1	B2 - 206.5
108.0084.00			1	B1 - 61.5
			1	B2 - 87.5
108.0086.XX			1	B1 - 46.5
			1	B2 - 51.5
108.1873.XX			1	B - 143

		#
168.7071.00		2
168.8072.00		2
168.7073.00		6
168.8074.00		8
068.8808.00		2
160.8750.--		4
168.8712.00		8
160.8750.--		4
168.8742.00		8
168.5012.--		4
069.8518.04		1
052.5312.--		1
069.6831.XX		PROD STEPS
169.8748.04		PROD STEPS
080.9381.04		(2xh)
052.5327.--		1/300mm
052.5316.--		4
069.8360.04		1
052.5313.--		4
052.5316.--		4
069.8426.04		4
069.8427.04		4
052.5316.--		8
052.5317.--		1/400 mm
080.9078.04		(3xB)+(6xH)
080.9091.04		6
080.9320.04		B
080.9240.04		19.F. ...
080.9125.SY		(2xb1)+(2xb2)
		+(4xh)
180.9114.SY		(2xb1)+(2xb2)
		+(4xh)
180.9630.07		(2xb1)+(2xb2)
		+(4xh)
069.8540.04		1

b1 = B1 - 222.5
b2 = B2 - 222.5
h = H - 269.5

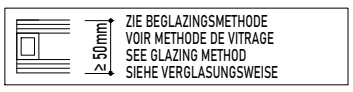

BESLAG DEUREN > ZIE "HARDWARE CONFIGURATOR"
ACCESSOIRES PORTES > VOIRE "HARDWARE CONFIGURATOR"
DOORS GEAR > SEE "HARDWARE CONFIGURATOR"
TUERENBESCHLAG > SIEHE "HARDWARE CONFIGURATOR"

DDOP 8

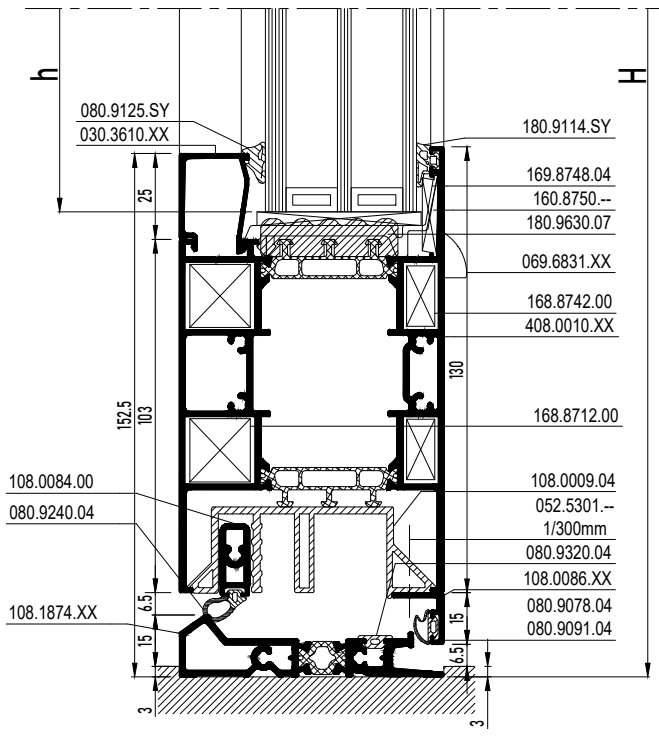

SECTIONS MASTERLINE 8-Fu

DOUBLE CASEM. DOOR OUTWARD OPENING WITH BRUSH

MASTERLINE 8-Fu

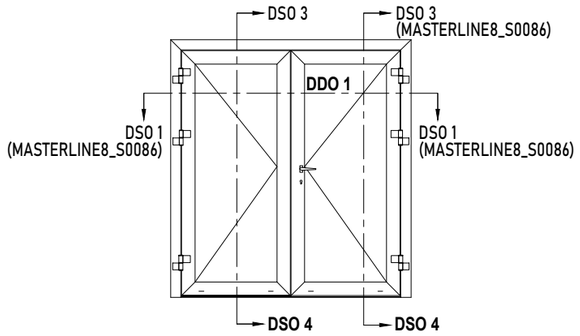

DDO 1

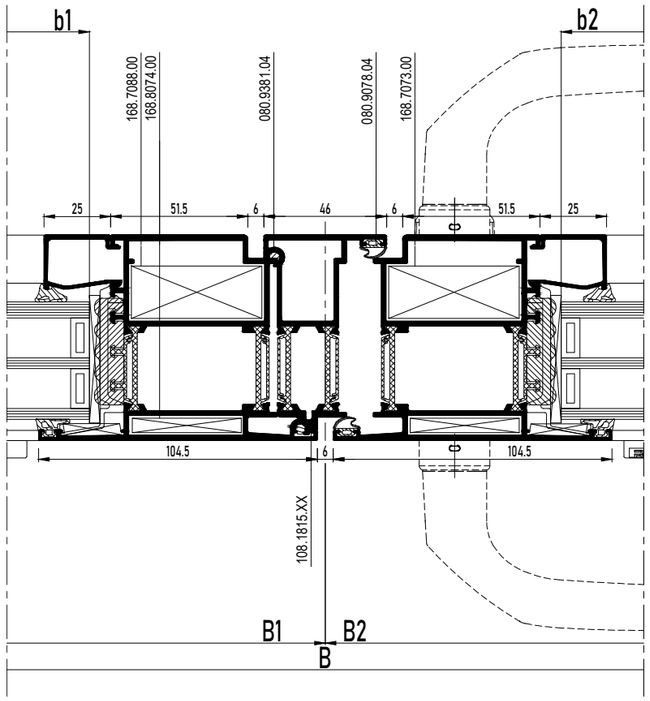

			#	Lm
408.0869.XX			1	B
			1	H
			1	H
408.0014.XX			2	B1 - 51.5
			2	B2 - 51.5
			4	H - 58.5
108.1815.XX			1	H - 79.5
030.3610.XX			2	B1 - 206.5
			2	B2 - 206.5
			4	H - 263.5
108.0030.XX			1	B1 - 93.5
			1	B2 - 93.5

b1 = B1 - 222.5
b2 = B2 - 222.5
h = h - 232.5

ZIE BEGLAZINGSMETHODE
VOIR METHODE DE VITRAGE
SEE GLAZING METHOD
SIEHE VERGLASUNGSWEISE

BESLAG DEUREN > ZIE HARDWARE CONFIGURATOR
ACCESSOIRES PORTES > VOIRE HARDWARE CONFIGURATOR
DOORS GEAR > SEE HARDWARE CONFIGURATOR
TUERENBESCHLAG > SIEHE HARDWARE CONFIGURATOR

		#
168.7071.00		2
168.8072.00		2
168.7073.00		6
168.8074.00		8
168.7088.00		2
160.8750.--		8
069.8518.04		1
052.5312.--		1
069.6831.XX		PROD STEPS
169.8748.04		PROD STEPS
169.8513.04		1
052.5316.--		4
069.8426.04		4
052.5316.--		8
052.5315.--		1/300mm
052.5318.--		1/300mm
052.5317.--		1/400mm
080.9381.04		(2xh)
080.9078.04		(2xB)+(6xH)
080.9091.04		3
080.9126.SY		(2xb1)+(2xb2)
		+(4xh)
180.9114.SY		(2xb1)+(2xb2)
		+(4xh)
180.9630.07		(2xb1)+(2xb2)
		+(4xh)
081.9236.04		6 x (60.5mm)
081.9092.04		2 x (60.5mm)
081.9141.04		PROD STEPS

DSO 4

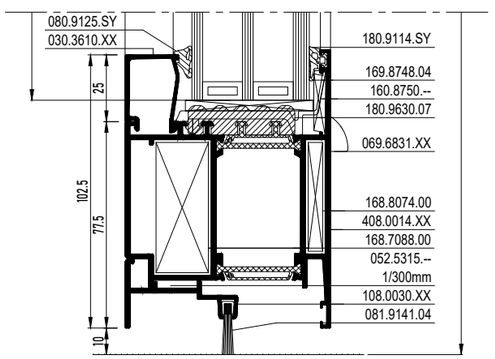

SECTIONS MASTERLINE 8-Fu Panic Door

Z-T DOOR OUTW. OPENING WITH DOUBLE WEATHER STRIP - DOUBLE PANIC EN179/1125

MASTERLINE 8-Fu

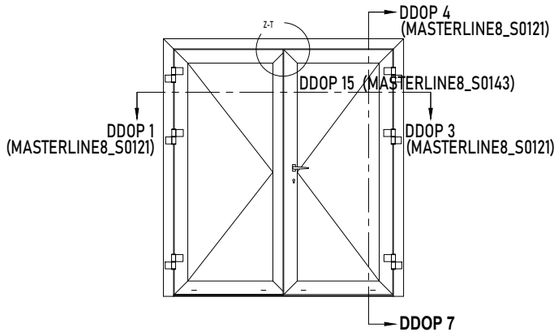

			#	Lm
408.0869.XX			1	B
			1	H
			1	H
408.0014.XX			2	B1 - 38.5
			2	B2 - 38.5
			2	H - 58
408.0016.XX			1	H - 58
408.0026.XX			1	H - 58
030.3610.XX			2	B1 - 193.5
			2	B2 - 193.5
			4	H - 263
108.0081.XX			1	B1 - 68.5
			1	B2 - 74.5
108.1874.XX			1	B - 143

b1 = B1 - 209.5
b2 = B2 - 209.5
h = H - 229

≥ 50mm
ZIE BEGLAZINGSMETHODE
VOIR METHODE DE VITRAGE
SEE GLAZING METHOD
SIEHE VERGLASUNGSWEISE

BESLAG DEUREN > ZIE "HARDWARE CONFIGURATOR "
ACCESSOIRES PORTES > VOIRE "HARDWARE CONFIGURATOR "
DOORS GEAR > SEE "HARDWARE CONFIGURATOR "
TUERENBESCHLAG > SIEHE "HARDWARE CONFIGURATOR "

		#
168.7071.00		2
168.8072.00		2
168.7073.00		6
168.8074.00		8
168.7088.00		2
160.8750.--		8
069.8511.04		1
069.8512.04		1
069.6831.XX		PROD STEPS
169.8748.04		PROD STEPS
052.5316.--		4
052.5327.--		1/300mm
069.8360.04		1
052.5313.--		4
052.5316.--		4
069.8426.04		4
069.8427.04		4
052.5316.--		8
080.9320.04		B
080.9078.04		(3xB)+(6xH)
080.9091.04		6
080.9240.04		PROD STEPS
080.9125.SY		(2xb1)+(2xb2)
		+(4xh)
180.9114.SY		(2xb1)+(2xb2)
		+(4xh)
180.9630.07		(2xb1)+(2xb2)
		+(4xh)
069.8540.04		1

DDOP 7

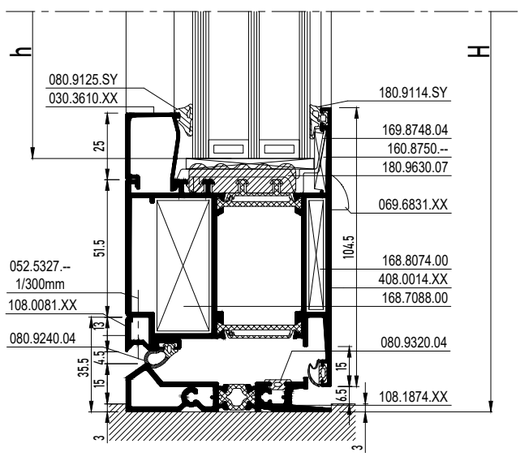

SECTIONS MASTERLINE 8-Fu

DOUBLE CASEMENT DOOR OUTWARD OPENING WITH BRUSH - BOTTOM DOOR RAIL

MASTERLINE 8-Fu

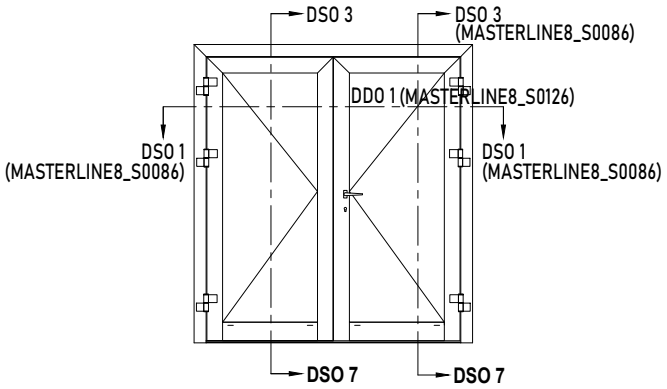

DSO 7

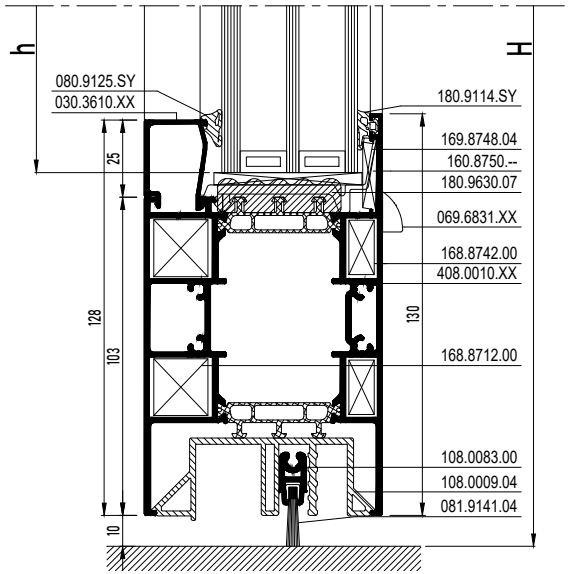

			#	Lm
408.0869.XX			1	B
			1	H
			1	H
408.0014.XX			1	B1 - 51.5
			1	B2 - 51.5
			2	H - 58.5
			2	H - 58.5
408.0010.XX			1	B1 - 206.5
			1	B2 - 206.5
108.1815.XX			1	H - 79.5
030.3610.XX			2	B1 - 206.5
			2	B2 - 206.5
			4	H - 289
108.0009.04			1	B1 - 206.5
			1	B2 - 206.5
108.0083.00			1	B1 - 87.5
			1	B2 - 87.5

b1 = B1 - 222.5
b2 = B2 - 222.5
h = H - 255

≥50mm
ZIE BEGLAZINGSMETHODE
VOIR METHODE DE VITRAGE
SEE GLAZING METHOD
SIEHE VERGLASUNGSWEISE

BESLAG DEUREN > ZIE HARDWARE CONFIGURATOR
ACCESSOIRES PORTES > VOIR HARDWARE CONFIGURATOR
DOORS GEAR > SEE HARDWARE CONFIGURATOR
TUERENBESCHLAG > SIEHE HARDWARE CONFIGURATOR

	#
168.7071.00	2
168.8072.00	2
168.7073.00	6
168.8074.00	8
068.8808.00	2
160.8750.--	4
168.8712.00	8
160.8750.--	4
168.8742.00	8
168.5012.--	4
069.8518.04	1
052.5312.--	1
069.6831.XX	PROD STEPS
169.8748.04	PROD STEPS
169.8513.04	1
052.5316.--	4
069.8426.04	4
052.5316.--	8
052.5315.--	1/300mm
052.5318.--	1/300mm
052.5317.--	1/400mm
080.9381.04	(2xh)
080.9078.04	(2xB)+(6xH)
080.9091.04	3
080.9126.SY	(2xb1)+(2xb2)
	+(4xh)
180.9114.SY	(2xb1)+(2xb2)
	+(4xh)
180.9630.07	(2xb1)+(2xb2)
	+(4xh)
081.9092.04	2 x (60.5mm)
081.9236.04	6 x (60.5mm)
081.9141.04	PROD STEPS

SECTIONS MASTERLINE 8-Fu Panic Door

Z-T DOOR OUTW. OPENING WITH DOUBLE WEATHER STRIP - BOTTOM DOOR RAIL - DOUBLE PANIC EN179/1125

MASTERLINE 8-Fu

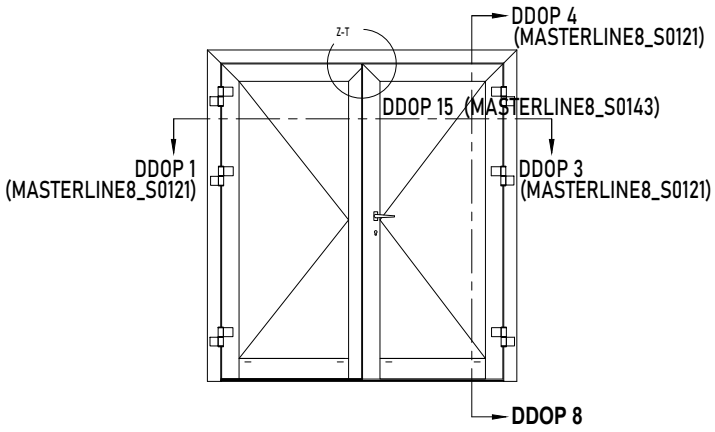

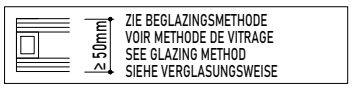

BESLAG DEUREN > ZIE "HARDWARE CONFIGURATOR"
ACCESSOIRES PORTES > VOIRE "HARDWARE CONFIGURATOR"
DOORS GEAR > SEE "HARDWARE CONFIGURATOR"
TUERENBESCHLAG > SIEHE "HARDWARE CONFIGURATOR"

			#	Lm
408.0869.XX			1	B
			1	H
			1	H
408.0014.XX			1	B1 - 38.5
			1	B2 - 38.5
			1	H - 73
			1	H - 73
408.0016.XX			1	H - 73
408.0026.XX			1	H - 73
408.0010.XX			1	B1 - 193.5
			1	B2 - 193.5
030.3610.XX			2	B1 - 193.5
			2	B2 - 193.5
			4	H - 303.5
108.0009.04			1	B1 - 193.5
			1	B2 - 193.5
108.0084.00			1	B1 - 74.5
			1	B2 - 74.5
108.0086.XX			1	B1 - 59.5
			1	B2 - 38.5
108.1873.XX			1	B - 143

b1 = B1 - 209.5	
b2 = B2 - 209.5	
h = H - 269.5	

		#
168.7071.00		2
168.8072.00		2
168.7073.00		6
168.8074.00		8
068.8808.00		2
160.8750.--		4
168.8712.00		8
160.8750.--		4
168.8742.00		8
168.5012.--		4
069.8511.04		1
069.8512.04		1
069.6831.XX		19.F. ...
169.8748.04		19.F. ...
052.5316.--		4
052.5310.--		1/300mm
069.8360.04		1
052.5313.--		4
052.5316.--		4
069.8426.04		4
069.8427.04		4
052.5316.--		8
052.5317.--		1/400mm
080.9320.04		B
080.9078.04		(3xB)+(6xH)
080.9091.04		6
080.9240.04		19.F. ...
080.9125.SY		(2xb1)+(2xb2)
		+(4xh)
180.9114.SY		(2xb1)+(2xb2)
		+(4xh)
180.9630.07		(2xb1)+(2xb2)
		+(4xh)
069.8540.04		1

DDOP 8

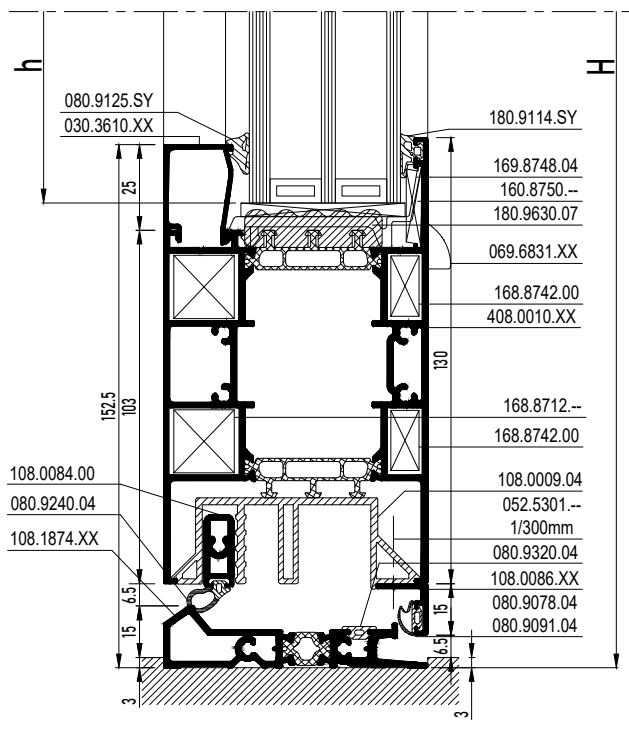

SECTIONS MASTERLINE 8-Fu

Z-T DOOR OUTWARD OPENING WITH BRUSH

MASTERLINE 8-Fu

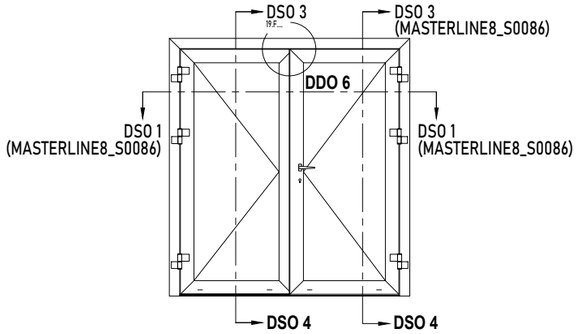

			#	Lm
408.0869.XX			1	B
			1	H
			1	H
408.0014.XX			2	B1 - 38.5
			2	B2 - 38.5
			3	H - 58.5
408.0026.XX			1	H - 58.5
030.3610.XX			2	B1 - 193.5
			2	B2 - 193.5
			4	H - 263.5
108.0030.XX			1	B1 - 59.5
			1	B2 - 80.5

b1 = B1 - 209.5
b2 = B2 - 209.5
h = h - 229.5

50mm
ZIE BEGLAZINGSMETHODE
VOIR METHODE DE VITRAGE
SEE GLAZING METHOD
SIEHE VERGLASUNGSWEISE

BESLAG DEUREN > ZIE HARDWARE CONFIGURATOR
ACCESSOIRES PORTES > VOIR HARDWARE CONFIGURATOR
DOORS GEAR > SEE HARDWARE CONFIGURATOR
TUERENBESCHLAG > SIEHE HARDWARE CONFIGURATOR

	#
168.7071.00	2
168.8072.00	2
168.7073.00	6
168.8074.00	6
168.7088.00	2
160.8750.--	8
069.8511.04	1
069.8512.04	1
069.6831.XX	PROD STEPS
169.8748.04	PROD STEPS
169.8513.04	1
052.5316.--	4
069.8426.04	4
052.5316.--	8
080.9078.04	(2xB)+(6xH)
080.9091.04	3
080.9125.SY	(2xb1)+(2xb2)
	+(4xh)
180.9114.SY	(2xb1)+(2xb2)
	+(4xh)
180.9630.07	(2xb1)+(2xb2)
	+(4xh)
052.5315.--	1/300mm
081.9236.04	6 x (60.5mm)
081.9092.04	2 x (60.5mm)
081.9141.04	PROD STEPS

DDO 6

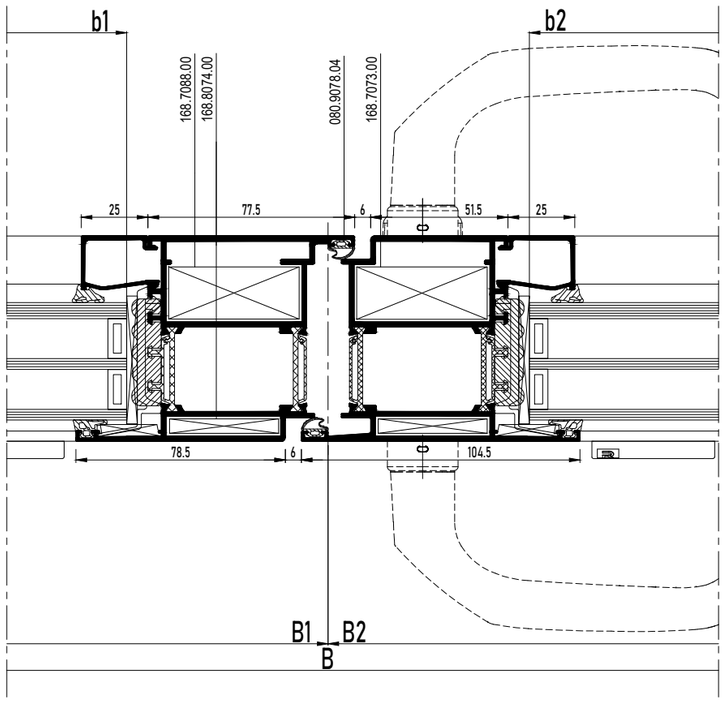

DSO 4

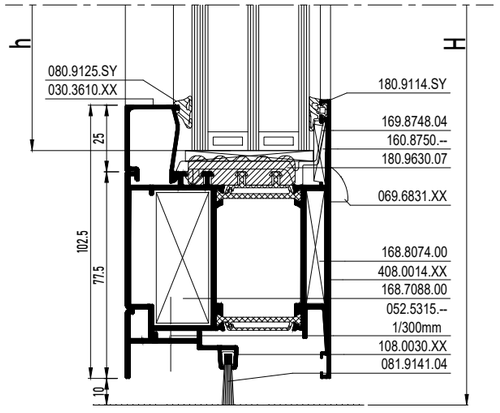

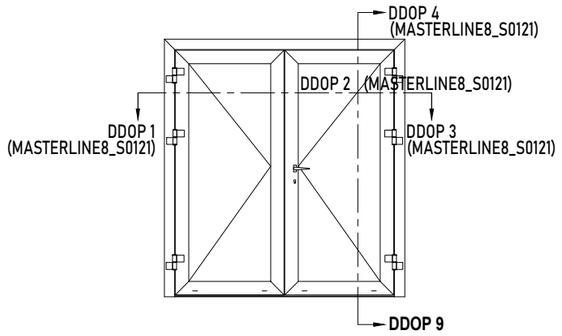

DDOP 9

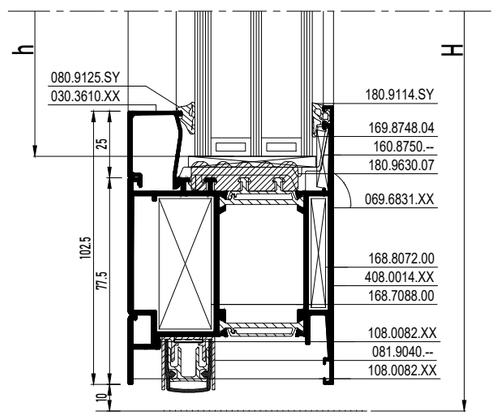

			#	L_m
408.0869.XX			1	B
			1	H
			1	H
408.0014.XX			2	B1 - 51.5
			2	B2 - 51.5
			3	H - 58.5
408.0016.XX			1	H - 58.5
108.1815.XX			1	H - 79.5
030.3610.XX			2	B1 - 206.5
			2	B2 - 206.5
			4	H - 263.5
108.0082.XX			1	B1 - 93.5
			1	B2 - 93.5

b1 = B1 - 222.5
b2 = B2 - 222.5
h = H - 229.5

≥40mm
ZIE BEGLAZINGSMETHODE
VOIR METHODE DE VITRAGE
SEE GLAZING METHOD
SIEHE VERGLASUNGSWEISE

BESLAG DEUREN > ZIE "HARDWARE CONFIGURATOR"
ACCESSOIRES PORTES > VOIRE "HARDWARE CONFIGURATOR"
DOORS GEAR > SEE "HARDWARE CONFIGURATOR"
TUERENBESCHLAG > SIEHE "HARDWARE CONFIGURATOR"

	#
168.7071.00	2
168.8072.00	2
168.7073.00	6
168.8072.00	8
168.7088.00	2
160.8750.--	8
069.8518.04	1
052.5312.--	1
069.6831.XX	PROD STEPS
169.8748.04	PROD STEPS
169.8513.04	1
052.5316.--	4
169.8510.04	2
069.8426.04	4
052.5316.--	8
052.5315.--	1/300mm
052.5318.--	1/300mm
080.9381.04	(2xh)
080.9078.04	(2xB)+(6xH)
080.9091.04	3
080.9126.SY	(2xb1)+(2xb2)
	+(4xh)
180.9114.SY	(2xb1)+(2xb2)
	+(4xh)
180.9630.07	(2xb1)+(2xb2)
	+(4xh)
081.9040.--	19H.F. ...
081.9236.04	6 x (60.5mm)
069.8540.04	1

SECTIONS MASTERLINE 8-Fu

Z-T DOOR OUTWARD OPENING WITH BRUSH - BOTTOM DOOR RAIL

MASTERLINE 8-Fu

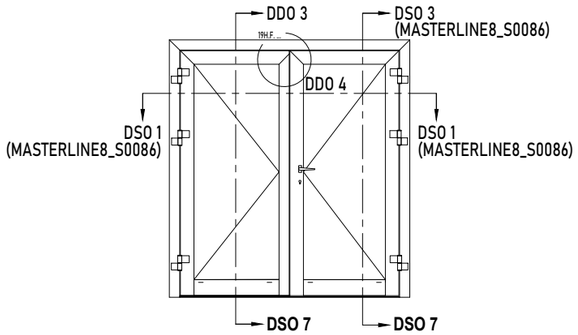

			#	Lm
408.0869.XX			1	B
			1	H
			1	H
408.0014.XX			1	B1 - 38.5
			1	B2 - 38.5
			2	H - 58.5
			1	H - 58.5
408.0026.XX			1	H - 58.5
408.0010.XX			1	B1 - 193.5
			1	B2 - 193.5
030.3610.XX			2	B1 - 193.5
			2	B2 - 193.5
			4	H - 289
108.0009.04			1	B1 - 193.5
			1	B2 - 193.5
108.0083.00			1	B1 - 74.5
			1	B2 - 74.5

b1 = B1 - 209.5
b2 = B2 - 209.5
h = H - 255

ZIE BEGLAZINGSMETHODE
VOIR METHODE DE VITRAGE
SEE GLAZING METHOD
SIEHE VERGLASUNGSWEISE

BESLAG DEUREN > ZIE HARDWARE CONFIGURATOR
ACCESSOIRES PORTES > VOIRE HARDWARE CONFIGURATOR
DOORS GEAR > SEE HARDWARE CONFIGURATOR
TUERENBESCHLAG > SIEHE HARDWARE CONFIGURATOR

		#
168.7071.00		2
168.8072.00		2
168.7073.00		6
168.8074.00		8
168.7088.00		2
160.8750.--		4
168.8712.00		8
160.8750.--		4
168.8742.00		8
168.5012.--		4
069.8511.04		1
069.8512.04		1
069.6831.XX		PROD STEPS
169.8748.04		PROD STEPS
169.8513.04		1
052.5316.--		4
069.8426.04		4
052.5316.--		8
052.5315.--		1/300mm
052.5317.--		1/400mm
080.9381.04		(2xh)
080.9078.04		(2xB)+(6xH)
080.9091.04		3
080.9240.04		PROD STEPS
080.9125.SY		(2xb1)+(2xb2)
		+(4xh)
180.9114.SY		(2xb1)+(2xb2)
		+(4xh)
180.9630.07		(2xb1)+(2xb2)
		+(4xh)
081.9236.04		6 x (60.5mm)
081.9092.04		2 x (60.5mm)
081.9141.04		PROD STEPS

DSO 7

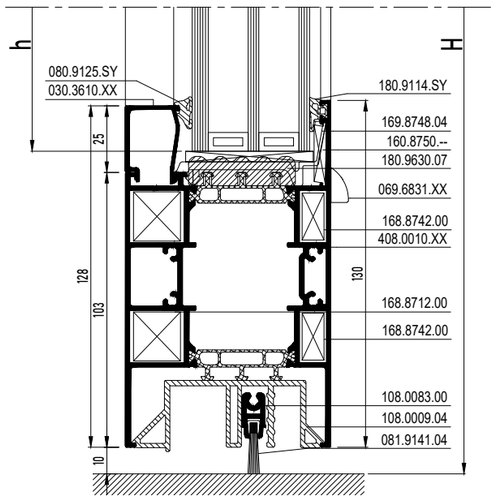

SECTIONS MASTERLINE 8-Fu Panic Door

DBL. CAS. DOOR OUTW. OPENING WITH AUTOMATIC DRAUGHT EXCLUDER - BOTTOM DOOR RAIL - DOUBLE PANIC EN179/1125

MASTERLINE 8-Fu

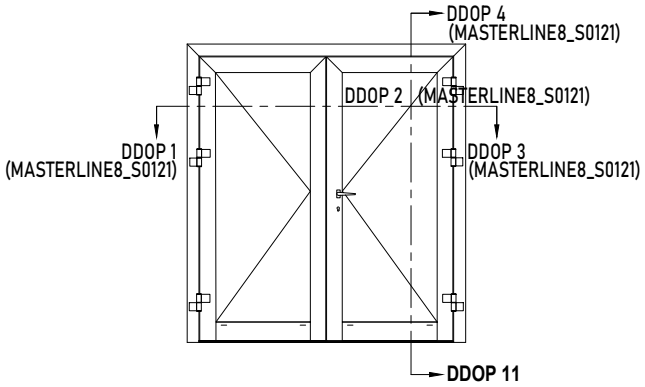

DDOP 11

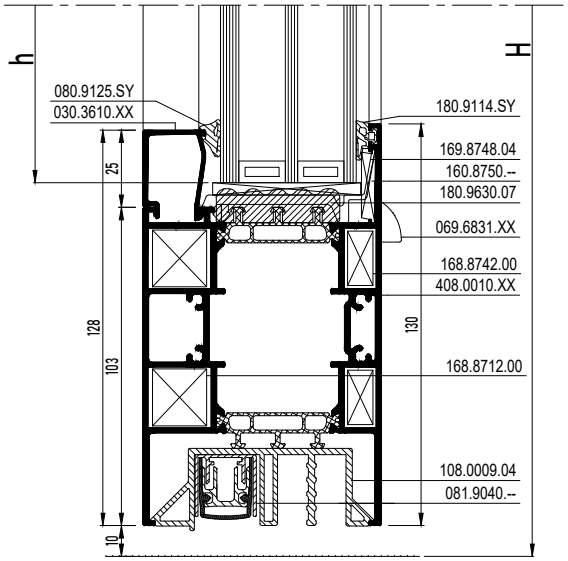

			#	Lm
408.0869.XX			1	B
			1	H
			1	H
408.0014.XX			1	B1 - 51.5
			1	B2 - 51.5
			2	H - 58.5
			1	H - 58.5
408.0016.XX			1	H - 58.5
408.0010.XX			1	B1 - 206.5
			1	B2 - 206.5
108.1815.XX			1	H - 82.5
030.3610.XX			2	B1 - 206.5
			2	B2 - 206.5
			4	H - 292
108.0009.04			1	B1 - 206.5
			1	B2 - 206.5

b1 = B1 - 222.5
b2 = B2 - 222.5
h = H - 258

≥ 40mm
ZIE BEGLAZINGSMETHODE
VOIR METHODE DE VITRAGE
SEE GLAZING METHOD
SIEHE VERGLASUNGSWEISE

BESLAG DEUREN > ZIE "HARDWARE CONFIGURATOR"
ACCESSOIRES PORTES > VOIRE "HARDWARE CONFIGURATOR"
DOORS GEAR > SEE "HARDWARE CONFIGURATOR"
TUERENBESCHLAG > SIEHE "HARDWARE CONFIGURATOR"

	#
168.7071.00	2
168.8072.00	2
168.7073.00	6
168.8074.00	8
168.7088.00	2
160.8750.--	4
168.8712.00	8
160.8750.--	4
168.8742.00	8
168.5012.--	4
069.8518.04	1
052.5312.--	1
069.6831.XX	PROD STEPS
169.8748.04	PROD STEPS
169.8513.04	1
052.5316.--	4
169.8510.04	2
069.8426.04	4
052.5316.--	8
052.5315.--	1/300mm
052.5318.--	1/300mm
052.5317.--	1/400mm
080.9381.04	(2xh)
081.9040.--	PROD STEPS
080.9078.04	(2xB)+(6xH)
080.9091.04	3
080.9126.SY	(2xb1)+(2xb2) +(4xh)
180.9114.SY	(2xb1)+(2xb2) +(4xh)
180.9630.07	(2xb1)+(2xb2) +(4xh)
081.9236.04	6 x (60.5mm)
069.8541.04	1

SECTIONS MASTERLINE 8-Fu

COMBINED DOOR OUTWARD OPENING WITH BRUSH

MASTERLINE 8-Fu

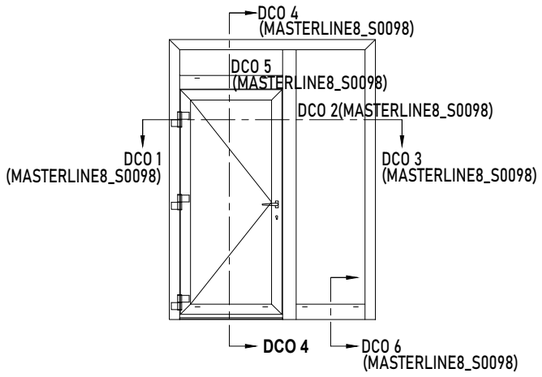

b1 = B1 - 316.5
h1 = H1 - 240.5
b2 = B2 - 95.5
h2 = H - 155
h3 = H3 - 95.5
b3 = B1 - 95.5

≥ 50mm
ZIE BEGLAZINGSMETHODE
VOIR METHODE DE VITRAGE
SEE GLAZING METHOD
SIEHE VERGLASUNGSWEISE

		#	Lm
408.0125.XX		1	B
		1	H
		1	H
408.1028.XX		1	B1 - 79.5
		1	H1 - 26.5
		1	H1 - 26.5
408.0014.XX		2	B1 - 145.5
		2	H1 - 69.5
408.0114.XX		1	B1 - 79.5
		1	H - 53
408.1142.XX		1	B2 - 79.5
030.3610.XX		2	B1 - 300.5
		2	H1 - 274.5
		2	B1 - 79.5
		2	H3 - 129.5
		2	B2 - 79.5
		2	H - 189
108.0030.XX		1	B1 - 187.5

BESLAG DEUREN > ZIE HARDWARE CONFIGURATOR
ACCESSOIRES PORTES > VOIRE HARDWARE CONFIGURATOR
DOORS GEAR > SEE HARDWARE CONFIGURATOR
TUERENBESCHLAG > SIEHE HARDWARE CONFIGURATOR

X
DICHTINGSMIDDEL
MATIERE D'ETANCHEITE
SEALING AGENT
ABDICHTUNG

		#
168.7073.00		4
168.8074.00		4
168.7004.00		2
168.8004.00		2
160.8750.--		14
068.8520.00		2
050.5091.--		4
168.8714.00		3
168.8712.00		4
168.8688.04		10
168.8742.00		10
168.5012.--		7
169.8748.04		PROD STEPS
069.6831.XX		PROD STEPS
169.8513.04		1
052.5316.--		4
069.8426.04		2
052.5316.--		4
052.5315.--		1/300mm
052.5329.--		1/300mm
080.9078.04		(3xB1)+(4xH1)
080.9091.04		2
080.9381.04		(2xB1)+(4xH1)
080.9125.SY		(2xb1)+(2xh1)
		(2xb2)+(2xh2)
		(2xb3)+(2xh3)
180.9630.07		(4xb1)+(2xb2)
		+(4xh)
180.9114.SY		(4xb1)+(2xb2)
		+(4xh)
081.9236.04		4 x (60.5mm)
081.9092.04		2 x (60.5mm)
081.9141.04		PROD STEPS

DCO 4

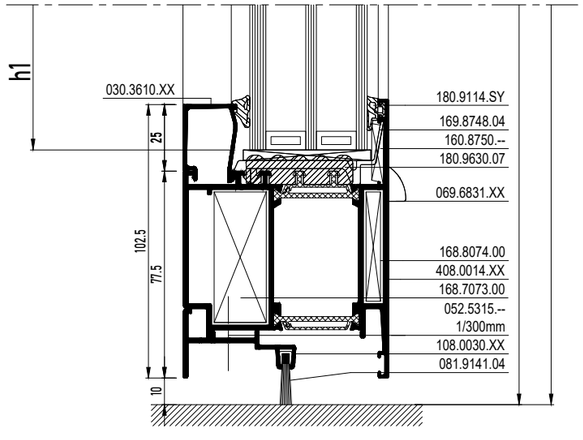

SECTIONS MASTERLINE 8-Fu Panic Door

Z-T DOOR OUTW. OPENING WITH AUTOMATIC DRAUGHT EXCLUDER - DOUBLE PANIC EN179/1125

MASTERLINE 8-Fu

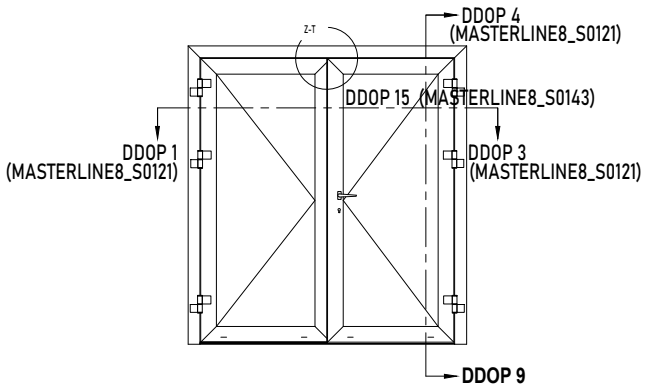

DDOP 9

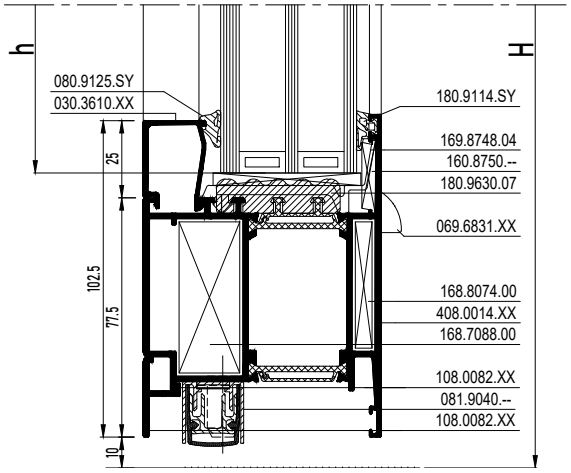

			#	Lm
408.0869.XX			1	B
			1	H
			1	H
408.0014.XX			2	B1 - 38.5
			2	B2 - 38.5
			2	H - 58.5
408.0016.XX			1	H - 58.5
408.0026.XX			1	H - 58.5
030.3610.XX			2	B1 - 193.5
			2	B2 - 193.5
			4	H - 263.5
108.0082.XX			1	B1 - 59.5
			1	B2 - 80.5

b1 = B1 - 209.5
b2 = B2 - 209.5
h = H - 229.5

≥ 50mm
ZIE BEGLAZINGSMETHODE
VOIR METHODE DE VITRAGE
SEE GLAZING METHOD
SIEHE VERGLASUNGSWEISE

BESLAG DEUREN > ZIE "HARDWARE CONFIGURATOR"
ACCESSOIRES PORTES > VOIRE "HARDWARE CONFIGURATOR"
DOORS GEAR > SEE "HARDWARE CONFIGURATOR"
TUERENBESCHLAG > SIEHE "HARDWARE CONFIGURATOR"

		#
168.7071.00		2
168.8072.00		2
168.7073.00		6
168.8074.00		6
168.7088.00		2
160.8750.--		8
069.8511.04		1
069.8512.04		1
069.6831.XX		PROD STEPS
169.8748.04		PROD STEPS
169.8513.04		1
052.5316.--		4
169.8510.04		2
069.8426.04		4
052.5316.--		8
052.5315.--		1/300mm
080.9078.04		(2xB)+(6xH)
080.9091.04		3
080.9125.SY		(2xb1)+(2xb2)
		+(4xh)
180.9114.SY		(2xb1)+(2xb2)
		+(4xh)
180.9630.07		(2xb1)+(2xb2)
		+(4xh)
081.9040.--		PROD STEPS
081.9236.04		6 x (60.5mm)
069.8540.04		1

SECTIONS MASTERLINE 8-Fu

COMBINED DOOR OUTWARD OPENING WITH BRUSH - BOTTOM DOOR RAIL

MASTERLINE 8-Fu

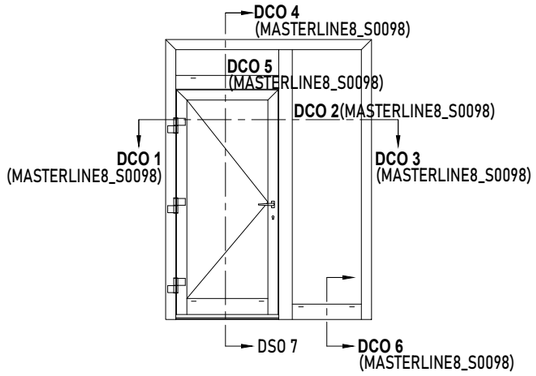

b1 = B1 - 316.5
h1 = H1 - 266
b2 = B2 - 95.5
h2 = H - 182
h3 = H3 - 95.5
b3 = B1 - 95.5

ZIE BEGLAZINGSMETHODE
VOIR METHODE DE VITRAGE
SEE GLAZING METHOD
SIEHE VERGLASUNGSWEISE

		#	Lm
408.0125.XX		1	B
		1	H
		1	H
408.1028.XX		1	B1 - 79.5
		1	H1 - 26.5
		1	H1 - 26.5
408.0114.XX		1	B1 - 79.5
		1	H - 53
408.0014.XX		1	B1 - 145.5
		1	H1 - 69.5
		1	H1 - 69.5
408.0010.XX		1	B1 - 300.5
408.1140.XX		1	B2 - 79.5
030.3610.XX		2	B1 - 300.5
		2	H1 - 299.5
		2	B1 - 79.5
		2	H3 - 129.5
		2	B2 - 79.5
		2	H - 216
108.0009.04		1	B1 - 300.5
108.0083.00		1	B - 181.5

BESLAG DEUREN > ZIE HARDWARE CONFIGURATOR
ACCESSOIRES PORTES > VOIR HARDWARE CONFIGURATOR
DOORS GEAR > SEE HARDWARE CONFIGURATOR
TUERENBESCHLAG > SIEHE HARDWARE CONFIGURATOR

		#
168.7071.00		4
168.8072.00		4
168.7073.00		2
168.8074.00		2
160.8750.--		12
068.8520.00		2
050.5091.--		4
168.8712.00		8
160.8750.--		2
168.8742.00		8
168.5012.--		2
168.8714.00		3
168.8712.00		6
168.8688.04		10
169.8748.04		PROD STEPS
069.6831.XX		PROD STEPS
080.9078.04		(3xB1)+(4xH1)
080.9381.04		(2xB1)+(4xH1)
080.9125.SY		(2xb1)+(2xh1)
		(2xb2)+(2xh2)
		(2xb3)+(2xh3)
180.9630.07		(4xb1)+(2xb2)
		+(4xh3)
180.9114.SY		(4xb1)+(2xb2)
		+(4xh3)
169.8513.04		1
052.5316.--		4
069.8426.04		2
052.5316.--		4
081.9236.04		4 x (60.5mm)
081.9092.04		2 x (60.5mm)
081.9141.04		PROD STEPS

DSO 7

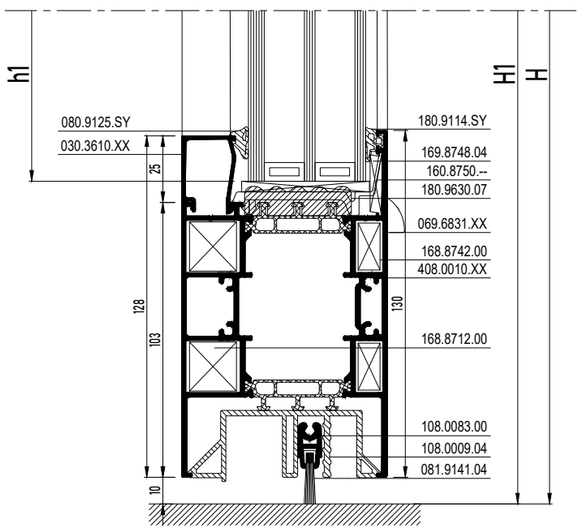

SECTIONS MASTERLINE 8-Fu Panic Door

Z-T DOOR OUTW. OPENING WITH AUTOMATIC DRAUGHT EXCLUDER - BOTTOM DOOR RAIL - DOUBLE PANIC EN179/1125

MASTERLINE 8-Fu

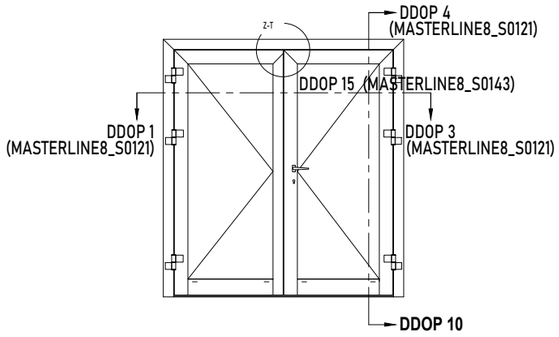

DDOP 10

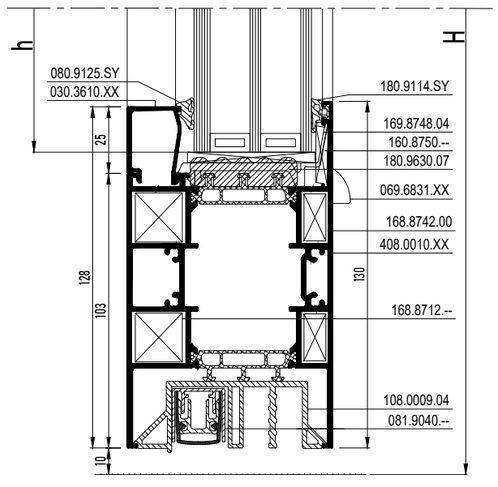

			#	Lm
408.0869.XX			1	B
			1	H
			1	H
408.0014.XX			1	B1 - 38.5
			1	B2 - 38.5
			1	H - 58.5
			1	H - 58.5
408.0016.XX			1	H - 73
408.0026.XX			1	H - 58.5
408.0010.XX			1	B1 - 193.5
			1	B2 - 193.5
030.3610.XX			2	B1 - 193.5
			2	B2 - 193.5
			4	H - 292
108.0009.04			1	B1 - 193.5
			1	B2 - 193.5

b1 = B1 - 209.5	
b2 = B2 - 209.5	
h = H - 258	

≥ 50mm
ZIE BEGLAZINGSMETHODE
VOIR METHODE DE VITRAGE
SEE GLAZING METHOD
SIEHE VERGLASUNGSWEISE

BESLAG DEUREN > ZIE "HARDWARE CONFIGURATOR"
ACCESSOIRES PORTES > VOIRE "HARDWARE CONFIGURATOR"
DOORS GEAR > SEE "HARDWARE CONFIGURATOR"
TUERENBESCHLAG > SIEHE "HARDWARE CONFIGURATOR"

		#
168.7071.00		2
168.8072.00		2
168.7073.00		6
168.8074.00		8
168.7088.00		2
160.8750.--		4
168.8712.00		8
160.8750.--		4
168.8742.00		8
168.5012.--		4
069.8511.04		1
069.8512.04		1
069.6831.XX		PROD STEPS
169.8748.04		PROD STEPS
169.8513.04		1
052.5316.--		4
169.8510.04		2
069.8426.04		4
052.5316.--		8
081.9040.--		PROD STEPS
052.5315.--		1/300mm
052.5317.--		1/400mm
080.9381.04		(2xh)
080.9078.04		(2xB)+(6xH)
080.9091.04		3
080.9240.04		PROD STEPS
080.9125.SY		(2xb1)+(2xb2)
		+(4xh)
180.9114.SY		(2xb1)+(2xb2)
		+(4xh)
180.9630.07		(2xb1)+(2xb2)
		+(4xh)
081.9236.04		6 x (60.5mm)
069.8541.04		1

SECTIONS MASTERLINE 8-Fu Anti Finger Trap Door

DOOR INWARD OPENING WITH DOUBLE WEATHER STRIP - ANTI FINGER TRAP

MASTERLINE 8-Fu

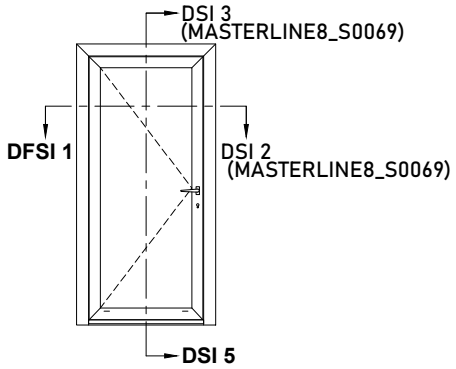

			#	Lm
408.0898.XX			1	B
			1	H
			1	H
408.0026.XX			2	B - 121
			2	H - 58
030.3610.XX			2	B - 276
			2	H - 263
108.1873.XX			1	B - 143
108.0080.XX			1	B - 141
108.0065.XX			1	H - 89.5
			1	H - 83.5

b = B - 292
h = H - 229

50mm
ZIE BEGLAZINGSMETHODE
VOIR METHODE DE VITRAGE
SEE GLAZING METHOD
SIEHE VERGLASUNGSWEISE

BESLAG DEUREN > ZIE "OPENING DOORS"
ACCESSOIRES PORTES > VOIRE "OPENING DOORS"
DOORS GEAR > SEE "OPENING DOORS"
TUERENBESCHLAG > SIEHE "OPENING DOORS"

		#
168.7071.00		2
168.8072.00		2
168.7073.00		4
168.8074.00		4
160.8750.--		4
169.8748.04		19H.F. ...
052.5317.--		1/300mm
069.6831.XX		19H.F. ...
069.8426.04		1
052.5316.--		2
069.8373.04		1
080.9078.04		3xB + 4xH
080.9091.04		6
080.9320.04		B
080.9240.04		19H.F. ...
080.9125.SY		2xb + 2xh
180.9114.SY		2xb + 2xh
180.9630.07		2xb + 2xh
080.9092.04		19H.F. ...
069.8675.04		1
069.8670.04		1
052.5316.--		1/300mm
069.8427.04		2
069.8360.04		1
052.5313.--		2
052.5316.--		2
069.8462.04		1
052.5313.--		2
052.5316.--		2
069.8360.04		1
052.5313.--		2
052.5316.--		2
069.8463.04		1
052.5313.--		2
052.5316.--		2

DFSI 1

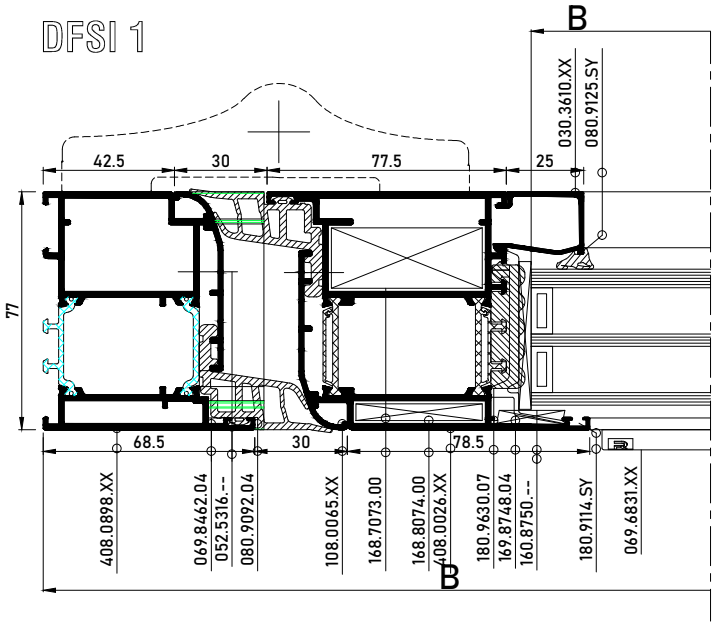

DSI 5

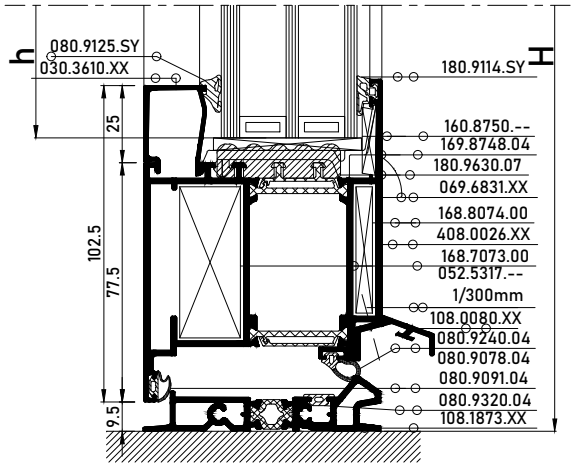

DIN R =

DIN L =

SECTIONS MASTERLINE 8-Fu Panic Door

DOUBLE CASEMENT DOOR OUTW. OPENING WITH BRUSH - DOUBLE PANIC EN179/1125

MASTERLINE 8-Fu

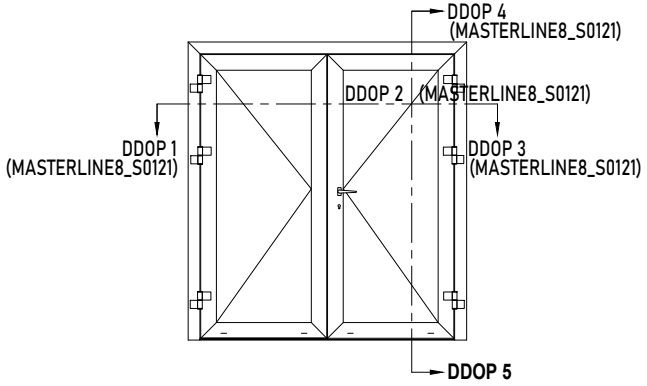

DDOP 5

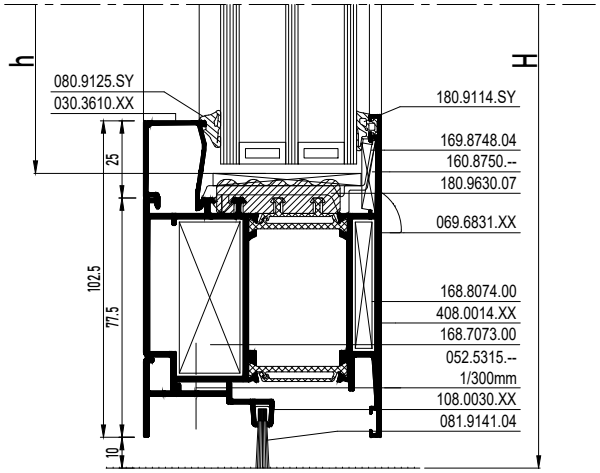

			#	Lm
408.0869.XX			1	B
			1	H
			1	H
408.0014.XX			2	B1 - 51.5
			2	B2 - 51.5
			3	H - 58.5
408.0016.XX			1	H - 58.5
108.1815.XX			1	H - 79.5
030.3610.XX			2	B1 - 206.5
			2	B2 - 206.5
			4	H - 263.5
108.0030.XX			1	B1 - 93.5
			1	B2 - 93.5

b1=B1-222.5
b2=B2-222.5
h=h-232.5



ZIE BEGLAZINGSMETHODE
VOIR METHODE DE VITRAGE
SEE GLAZING METHOD
SIEHE VERGLASUNGSWEISE

BESLAG DEUREN > ZIE "HARDWARE CONFIGURATOR"
ACCESSOIRES PORTES > VOIRE "HARDWARE CONFIGURATOR"
DOORS GEAR > SEE "HARDWARE CONFIGURATOR"
TUERENBESCHLAG > SIEHE "HARDWARE CONFIGURATOR"

		#
168.7071.00		2
168.8072.00		2
168.7073.00		6
168.8074.00		8
168.7088.00		2
160.8750.--		8
069.8518.04		1
052.5312.--		1
069.6831.XX		PROD STEPS
169.8748.04		PROD STEPS
169.8513.04		1
052.5316.--		4
069.8426.04		4
052.5316.--		8
052.5315.--		1/300mm
052.5318.--		1/300mm
052.5317.--		1/400mm
080.9381.04		(2xh)
080.9078.04		(2xB)+(6xH)
080.9091.04		3
080.9126.SY		(2xb1)+(2xb2)
		+(4xh)
180.9114.SY		(2xb1)+(2xb2)
		+(4xh)
180.9630.07		(2xb1)+(2xb2)
		+(4xh)
081.9236.04		6 x (60.5mm)
081.9092.04		2 x (60.5mm)
081.9141.04		PROD STEPS
069.8540.04		1

SECTIONS MASTERLINE 8-Fu Anti Finger Trap Door

DOUBLE CASEMENT DOOR INWARD OPEN. WITH DOUBLE WEATHER STRIP - ANTI FINGER TRAP

MASTERLINE 8-Fu

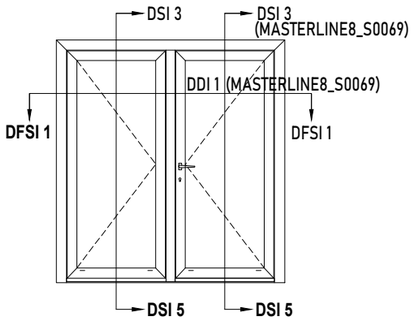

			#	Lm
408.0898.XX			1	B
			1	H
			1	H
408.0026.XX			2	B1 - 75.5
			2	B2 - 75.5
			4	H - 58
108.1015.XX			1	H - 100.5
030.3610.XX			2	B1 - 230.5
			2	B2 - 230.5
			4	H - 263
108.0080.XX			1	B1 - 56.5
			1	B2 - 98.5
108.1873.XX			1	B-143
108.0065.XX			2	H - 89.5
			2	H - 83.5

b1 = B1 - 246.5
b2 = B2 - 246.5
h = h - 229

ZIE BEGLAZINGSMETHODE
VOIR METHODE DE VITRAGE
SEE GLAZING METHOD
SIEHE VERGLASUNGSWEISE
50mm

BESLAG DEUREN > ZIE HARDWARE CONFIGURATOR
ACCESSOIRES PORTES > VOIR HARDWARE CONFIGURATOR
DOORS GEAR > SEE HARDWARE CONFIGURATOR
TUERENBESCHLAG > SIEHE "HARDWARE CONFIGURATOR

		#
168.7071.00		2
168.8072.00		2
168.7073.00		6
168.8074.00		8
068.8808.00		2
160.8750.--		8
069.8518.04		1
052.5312.--		1
069.6831.XX		PROD STEPS
169.8748.04		PROD STEPS
052.5318.--		1/300mm
052.5316.--		4
069.8426.04		2
052.5316.--		4
081.9229.07		2x(60.5mm)
052.5317.--		1/400mm
080.9381.04		(2xh)
069.8373.04		2
080.9078.04		(3xB)+(6xH)
080.9091.04		6
080.9240.04		19H.F. ...
080.9125.SY		(2xb1)+(2xb2)
		+(4xh)
180.9114.SY		(2xb1)+(2xb2)
		+(4xh)
180.9630.07		(2xb1)+(2xb2)
		+(4xh)
080.9092.04		PROD STEPS
052.5316.--		1/300mm
080.9320.04		B
069.8427.04		2
069.8675.04		1
069.8676.04		1
069.8670.04		2
069.8462.04		1 (R)
052.5313.--		2
052.5316.--		2
069.8463.04		1 (L)
052.5313.--		2
052.5316.--		2

DFSI 1

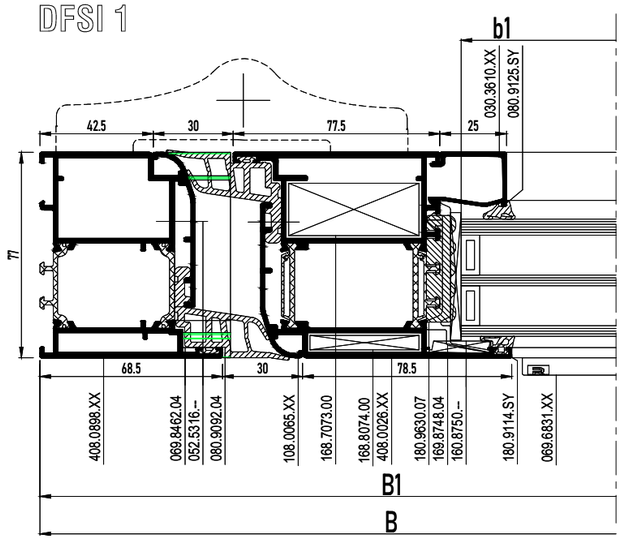

DSI 5

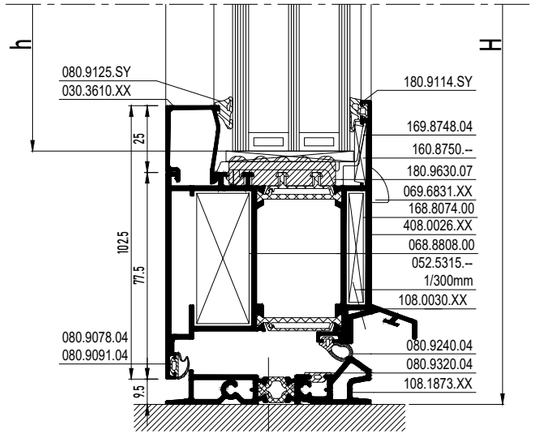

SECTIONS MASTERLINE 8-Fu Panic Door

DOUBLE CASEMENT DOOR OUTW. OPEN. WITH BRUSH - BOTTOM DOOR RAIL - DOUBLE PANIC EN179/1125

MASTERLINE 8-Fu

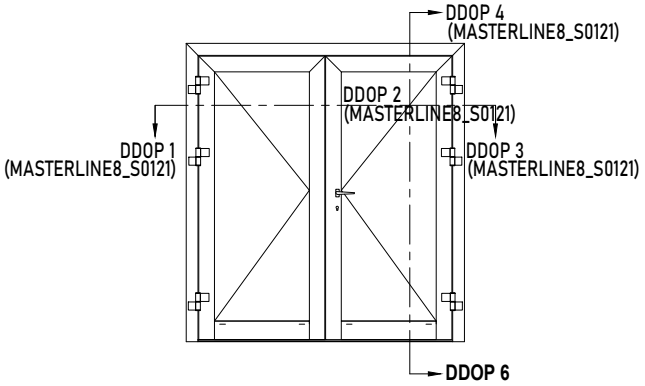

DSOP 6

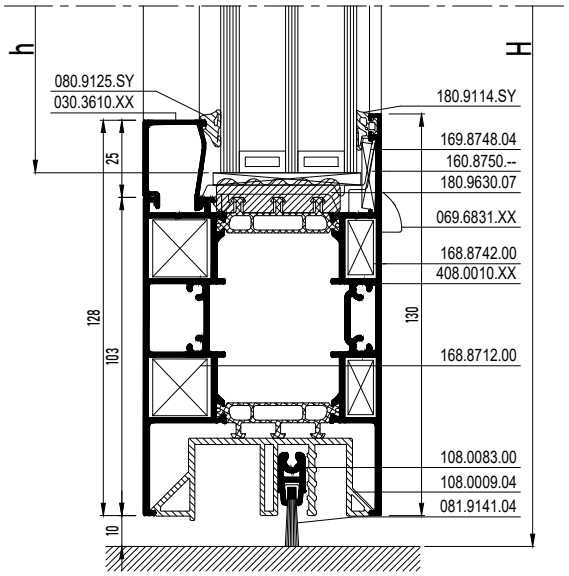

			#	Lm
408.0869.XX			1	B
			1	H
			1	H
408.0014.XX			1	B1 - 51.5
			1	B2 - 51.5
			2	H - 58.5
			1	H - 58.5
408.0016.XX			1	H - 58.5
408.0010.XX			1	B1 - 206.5
			1	B2 - 206.5
108.1815.XX			1	H - 79.5
030.3610.XX			2	B1 - 206.5
			2	B2 - 206.5
			4	H - 289
108.0009.04			1	B1 - 206.5
			1	B2 - 206.5
108.0083.00			1	B1 - 87.5
			1	B2 - 87.5

b1 = B1 - 222.5
b2 = B2 - 222.5
h = H - 255

ZIE BEGLAZINGSMETHODE
VOIR METHODE DE VITRAGE
SEE GLAZING METHOD
SIEHE VERGLASUNGSWEISE
≥ 50mm

BESLAG DEUREN > ZIE "OPENING DOORS"
ACCESSOIRES PORTES > VOIRE "OPENING DOORS"
DOORS GEAR > SEE "OPENING DOORS"
TUERENBESCHLAG > SIEHE "OPENING DOORS"

	#
168.7071.00	2
168.8072.00	2
168.7073.00	6
168.8074.00	8
068.8808.00	2
160.8750.--	4
168.8712.00	8
160.8750.--	4
168.8742.00	8
168.5012.--	4
069.8518.04	1
052.5312.--	1
069.6831.XX	19.F. ...
169.8748.04	19.F. ...
169.8513.04	1
052.5316.--	4
069.8426.04	4
052.5316.--	8
052.5315.--	1/300mm
052.5318.--	1/300mm
052.5317.--	1/400mm
080.9381.04	(2xh)
080.9078.04	(2xB)+(6xH)
080.9091.04	3
080.9126.SY	(2xb1)+(2xb2)
	+(4xh)
180.9114.SY	(2xb1)+(2xb2)
	+(4xh)
180.9630.07	(2xb1)+(2xb2)
	+(4xh)
081.9236.04	6 x (60.5mm)
081.9092.04	2 x (60.5mm)
081.9141.04	19.F. ...
069.8540.04	1

SECTIONS MASTERLINE 8-Fu Anti Finger Trap Door

Z-T DOOR INWARD OPENING WITH DOUBLE WEATHER STRIP - ANTI FINGER TRAP

MASTERLINE 8-Fu

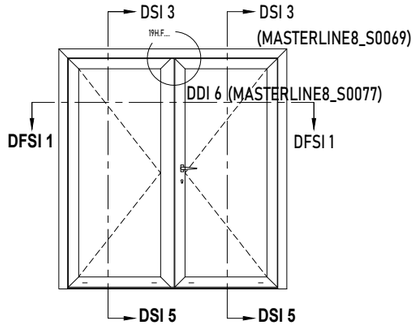

			#	Lm
408.0898.XX			1	B
			1	H
			1	H
408.0026.XX			2	B1 - 62.5
			2	B2 - 62.5
			1	H - 58
			2	H - 58
408.0014.XX			1	H - 58
030.3610.XX			2	B1 - 217.5
			2	B2 - 217.5
			4	H - 263
108.0080.XX			1	B1 - 68.5
			1	B2 - 84.5
108.1873.XX			1	B-143
108.0065.XX			1	H - 89.5
			1	H - 83.5

b1 = B1-233.5
b2 = B2-233.5
h = h - 229

≥ 50mm

ZIE BEGLAZINGSMETHODE
VOIR METHODE DE VITRAGE
SEE GLAZING METHOD
SIEHE VERGLASUNGSWEISE

BESLAG DEUREN > ZIE HARDWARE CONFIGURATOR
ACCESSOIRES PORTES > VOIRE HARDWARE CONFIGURATOR
DOORS GEAR > SEE HARDWARE CONFIGURATOR
TUERENBESCHLAG > SIEHE HARDWARE CONFIGURATOR

		#
168.7071.00		2
168.8072.00		2
168.7073.00		6
168.8074.00		8
068.8808.00		2
160.8750.--		8
069.8511.04		1
069.8512.04		1
069.6831.XX		PROD STEPS
169.8748.04		PROD STEPS
069.8426.04		2
052.5316.--		4
081.9229.07		2x(60.5mm)
069.8373.04		2
080.9078.04		(3xB)+(6xH)
080.9091.04		6
052.5317.--		1/300mm
052.5316.--		4
080.9320.04		B
080.9240.04		PROD STEPS
080.9125.SY		(2xb1)+(2xb2)
		+(4xh)
180.9114.SY		(2xb1)+(2xb2)
		+(4xh)
180.9630.07		(2xb1)+(2xb2)
		+(4xh)
052.5316.--		1/300mm
080.9092.04		PROD STEPS
069.8675.04		1
069.8676.04		1
069.8670.04		2
069.8427.04		2
069.8462.04		1 (R)
052.5313.--		2
052.5316.--		2
069.8463.04		1 (L)
052.5313.--		2
052.5316.--		2

DFSI 1

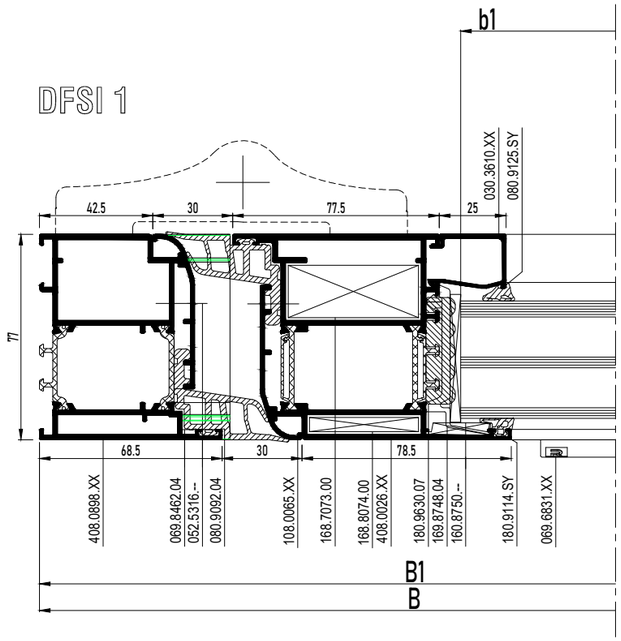

DSI 5

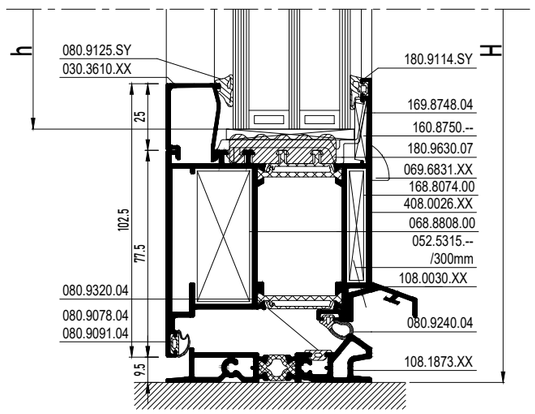

SECTIONS MASTERLINE 8-Fu Panic Door

Z-TDOOR OUTW. OPENING WITH BRUSH - DOUBLE PANIC EN179/1125

MASTERLINE 8-Fu

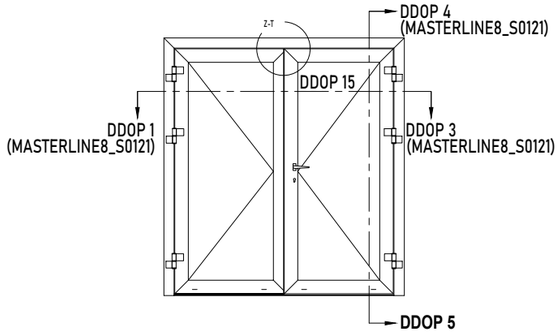

			#	Lm
408.0869.XX			1	B
			1	H
			1	H
408.0014.XX			2	B1 - 38.5
			2	B2 - 38.5
			2	H - 58.5
408.0016.XX			1	H - 58.5
408.0026.XX			1	H - 58.5
030.3610.XX			2	B1 - 193.5
			2	B2 - 193.5
			4	H - 263.5
108.0030.XX			1	B1 - 59.5
			1	B2 - 80.5

b1=B1-209.5
b2=B2-209.5
h = h - 229.5

ZIE BEGLAZINGSMETHODE
VOIR METHODE DE VITRAGE
SEE GLAZING METHOD
SIEHE VERGLASUNGSWEISE
≥ 50mm

BESLAG DEUREN > ZIE "HARDWARE CONFIGURATOR"
ACCESSOIRES PORTES > VOIRE "HARDWARE CONFIGURATOR"
DOORS GEAR > SEE "HARDWARE CONFIGURATOR"
TUERENBESCHLAG > SIEHE "HARDWARE CONFIGURATOR"

		#
168.7071.00		2
168.8072.00		2
168.7073.00		6
168.8074.00		6
168.7088.00		2
160.8750.--		8
069.8511.04		1
069.8512.04		1
069.6831.XX		PROD STEPS
169.8748.04		PROD STEPS
169.8513.04		1
052.5316.--		4
069.8426.04		4
052.5316.--		8
080.9078.04		(2xB)+(6xH)
080.9091.04		3
080.9125.SY		(2xb1)+(2xb2)
		+(4xh)
180.9114.SY		(2xb1)+(2xb2)
		+(4xh)
180.9630.07		(2xb1)+(2xb2)
		+(4xh)
052.5315.--		1/300mm
081.9236.04		6 x (60.5mm)
081.9092.04		2 x (60.5mm)
081.9141.04		PROD STEPS
069.8541.04		1
069.8542.04		1

DDOP 15

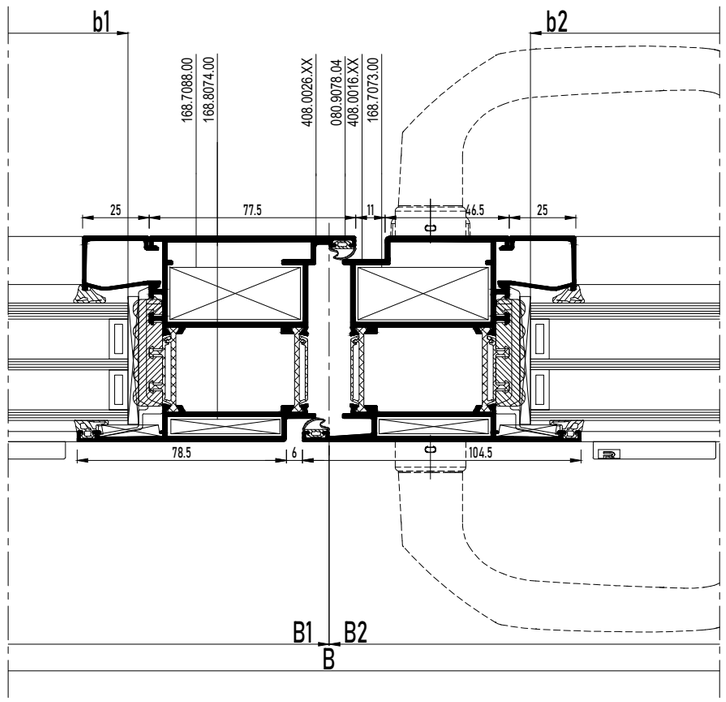

DDOP 5

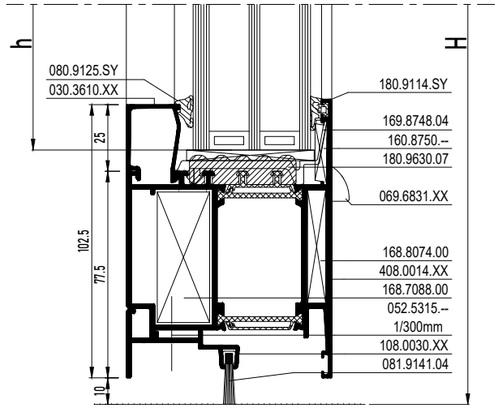

SECTIONS MASTERLINE 8-Fu Anti Finger Trap Door

DOOR INWARD OPENING WITH BRUSH - ANTI FINGER TRAP

MASTERLINE 8-Fu

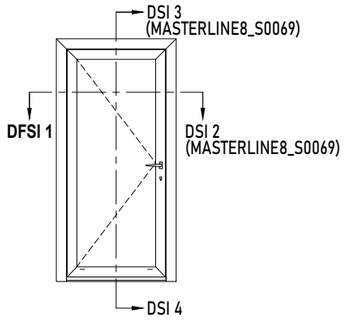

			#	Lm
408.0898.XX			1	B
			1	H
			1	H
408.0026.XX			2	B - 121
			2	H - 58.5
030.3610.XX			2	B - 276
			2	H - 263.5
108.0030.XX			1	B - 168
108.0065.XX			1	H - 57.5
			1	H - 84.5

b = B - 292
h1= H - 229.5

≥50mm
ZIE BEGLAZINGSMETHODE
VOIR METHODE DE VITRAGE
SEE GLAZING METHOD
SIEHE VERGLASUNGSWEISE

BESLAG DEUREN > ZIE HARDWARE CONFIGURATOR
ACCESSOIRES PORTES > VOIRE HARDWARE CONFIGURATOR
DOORS GEAR > SEE HARDWARE CONFIGURATOR
TUERENBESCHLAG > SIEHE HARDWARE CONFIGURATOR

		#
168.7071.00		2
168.8072.00		2
168.7073.00		4
168.8074.00		4
160.8750.--		4
169.8748.04		PROD STEPS
052.5315.--		1/300mm
069.6831.XX		19H.F. ...
169.8513.04		1
052.5316.--		2
069.8426.04		1
052.5316.--		2
081.9236.04		2 x (60.5mm)
081.9092.04		1 x (60.5mm)
081.9141.04		PROD STEPS
080.9078.04		3xB + 4xH
080.9091.04		2
080.9125.SY		2xb + 2xh
180.9114.SY		2xb + 2xh
180.9630.07		2xb + 2xh
080.9092.04		PROD STEPS
069.8675.04		1
069.8670.04		1
052.5316.--		1/300mm

DFSI 1

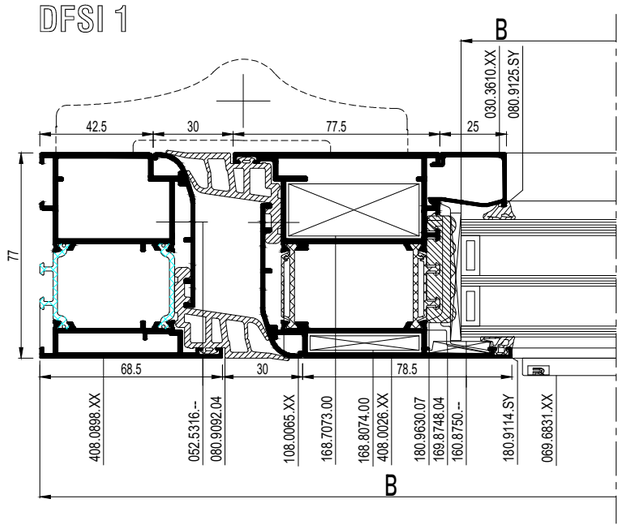

DSI 4

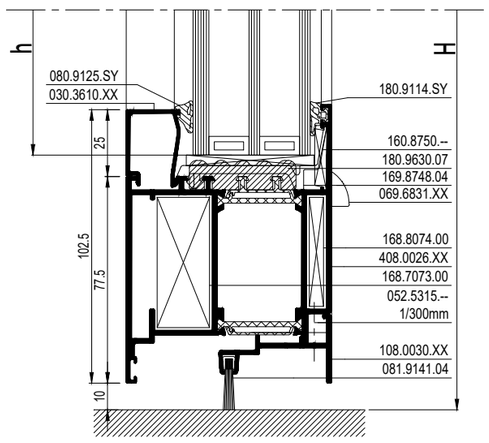

SECTIONS MASTERLINE 8-Fu Panic Door

Z-T DOOR OUTW. OPENING WITH BRUSH - BOTTOM DOOR RAIL - DOUBLE PANIC EN179/1125

MASTERLINE 8-Fu

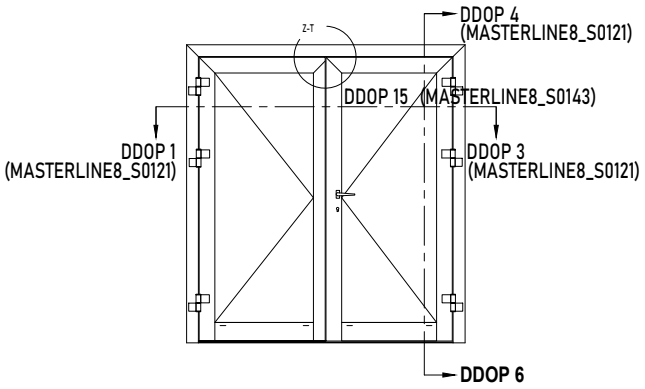

DDOP 6

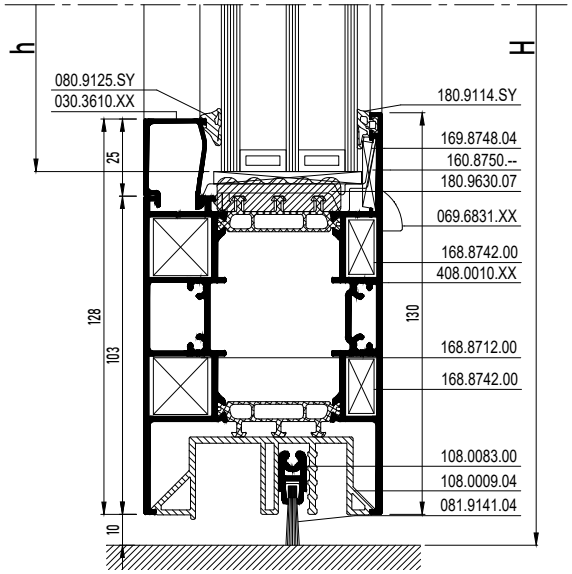

			#	Lm
408.0869.XX			1	B
			1	H
			1	H
408.0014.XX			1	B1 - 38.5
			1	B2 - 38.5
			1	H - 58.5
			1	H - 58.5
408.0016.XX			1	H - 58.5
408.0026.XX			1	H - 58.5
408.0010.XX			1	B1 - 193.5
			1	B2 - 193.5
030.3610.XX			2	B1 - 193.5
			2	B2 - 193.5
			4	H - 289
108.0009.04			1	B1 - 193.5
			1	B2 - 193.5
108.0083.00			1	B1 - 74.5
			1	B2 - 74.5

b1 = B1 - 209.5
b2 = B2 - 209.5
h = H - 255

≥50mm
ZIE BEGLAZINGSMETHODE
VOIR METHODE DE VITRAGE
SEE GLAZING METHOD
SIEHE VERGLASUNGSWEISE

BESLAG DEUREN > ZIE "HARDWARE CONFIGURATOR"
ACCESSOIRES PORTES > VOIRE "HARDWARE CONFIGURATOR"
DOORS GEAR > SEE "HARDWARE CONFIGURATOR"
TUERENBESCHLAG > SIEHE "HARDWARE CONFIGURATOR"

	#
168.7071.00	2
168.8072.00	2
168.7073.00	6
168.8074.00	8
168.7088.00	2
160.8750.--	4
168.8712.00	8
160.8750.--	4
168.8742.00	8
168.5012.--	4
069.8511.04	1
069.8512.04	1
069.6831.XX	PROD STEPS
169.8748.04	PROD STEPS
169.8513.04	1
052.5316.--	4
069.8426.04	4
052.5316.--	8
052.5315.--	1/300mm
052.5317.--	1/400mm
080.9381.04	(2xh)
080.9078.04	(2xB)+(6xH)
080.9091.04	3
080.9240.04	PROD STEPS
080.9125.SY	(2xb1)+(2xb2)
	+(4xh)
180.9114.SY	(2xb1)+(2xb2)
	+(4xh)
180.9630.07	(2xb1)+(2xb2)
	+(4xh)
081.9229.07	6 x (60.5mm)
081.9092.04	2 x (60.5mm)
081.9141.04	PROD STEPS
069.8541.04	1

SECTIONS MASTERLINE 8-Fu Anti Finger Trap Door

DOUBLE CASEMENT DOOR INWARD OPEN. WITH BRUSH - ANTI FINGER TRAP

MASTERLINE 8-Fu

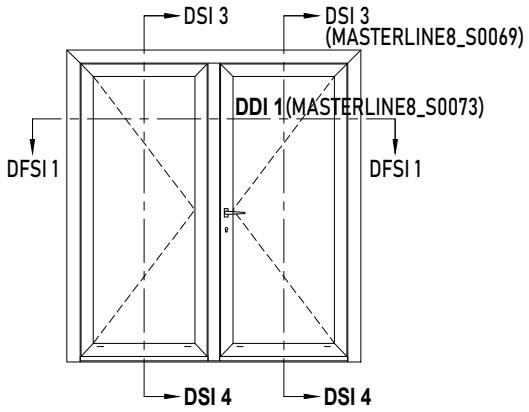

			#	Lm
408.0898.XX			1	B
			1	H
			1	H
408.0026.XX			2	B1 - 75.5
			2	B2 - 75.5
			4	H - 58.5
108.1015.XX			1	H - 79.5
030.3610.XX			2	B1 - 230.5
			2	B2 - 230.5
			4	H - 263.5
108.0030.XX			1	B1 - 122.5
			1	B2 - 122.5
108.0065.XX			2	H - 57.5
			2	H - 84.5

b1 = B1 - 246.5
b2 = B2 - 246.5
h = h - 229.5

ZIE BEGLAZINGSMETHODE
VOIR METHODE DE VITRAGE
SEE GLAZING METHOD
SIEHE VERGLASUNGSWEISE

BESLAG DEUREN > ZIE HARDWARE CONFIGURATOR
ACCESSOIRES PORTES > VOIR HARDWARE CONFIGURATOR
DOORS GEAR > SEE HARDWARE CONFIGURATOR
TUERENBESCHLAG > SIEHE HARDWARE CONFIGURATOR

	#
168.7071.00	2
168.8072.00	2
168.7073.00	6
168.8074.00	8
068.8808.00	2
160.8750.--	8
069.8515.04	1
052.5312.--	1
069.8426.04	2
052.5316.--	4
069.6831.XX	PROD STEPS
169.8748.04	PROD STEPS
052.5315.--	1/300mm
052.5318.--	1/300mm
080.9381.04	(2xh)
081.9236.04	2 x (60.5mm)
081.9141.04	PROD STEPS
080.9078.04	(2xB)+(6xH)
080.9091.04	3
080.9125.SY	(2xb1)+(2xb2)
	+(4xh)
180.9114.SY	(2xb1)+(2xb2)
	+(4xh)
180.9630.07	(2xb1)+(2xb2)
	+(4xh)
069.8675.04	1
069.8676.04	1
069.8670.04	2
052.5316.--	1/300mm
080.9092.04	PROD STEPS

DFSI 1

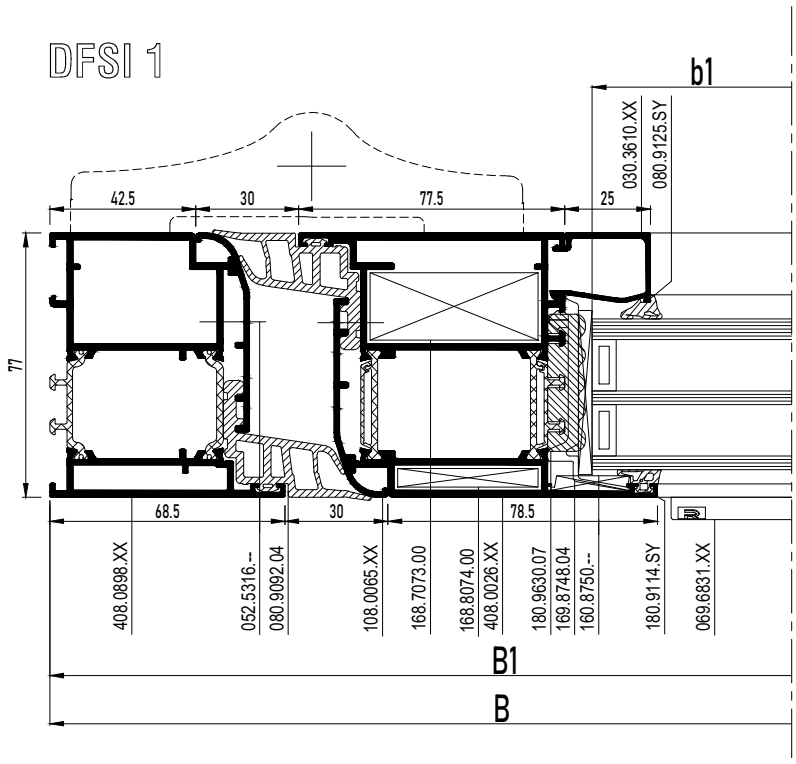

DSI 4

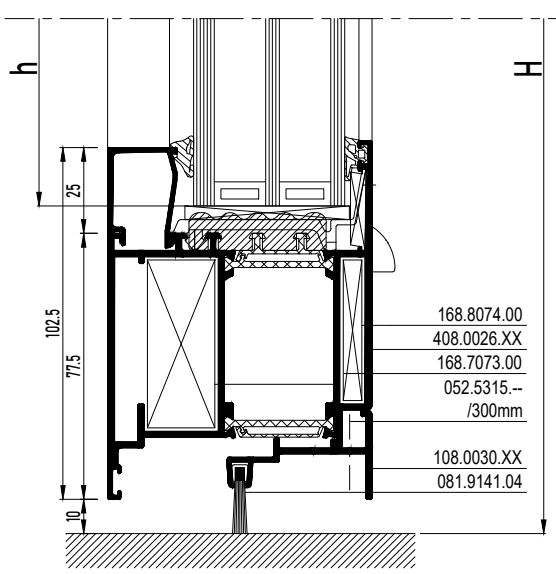

SECTIONS MASTERLINE 8-Fu Panel Door

PANEL DOOR INWARD OPENING WITH DOUBLE WEATHER STRIP

MASTERLINE 8-Fu

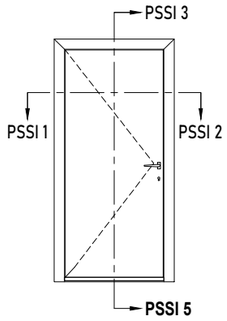

			#	Lm
408.0898.XX			1	B
			1	H
			1	H
408.1316.XX			2	B - 97
			2	H - 58
030.3615.XX			2	B - 252
			2	H - 263.5
108.0080.XX			1	B - 133
108.1873.XX			1	B - 143

	#
168.7071.00	2
168.8072.00	2
168.7073.00	4
021.5830.00	4
069.8360.04	1
052.5313.--	4
052.5316.--	4
069.8426.04	2
052.5316.--	4
069.8427.04	2
069.8373.04	1
080.9078.04	(2xB)+(4xH)
080.9124.SY	(2xb)+(2xh)
052.5316.--	1/300mm
080.9320.04	B
080.9240.04	PROD STEPS
080.9631.07	(4xb)+(4xh)

INT.

Pbi = B - 268
Phi = H - 229

EXT.

Pbe = B - 149
Phe = H - 110.5

BESLAG DEUREN > ZIE "HARDWARE CONFIGURATOR"
ACCESSOIRES PORTES > VOIRE "HARDWARE CONFIGURATOR"
DOORS GEAR > SEE "HARDWARE CONFIGURATOR"
TUERENBESCHLAG > SIEHE "HARDWARE CONFIGURATOR"

Het verkleven van de panelen moet gebeuren volgens de voorschriften van de leverancier van de panelen. Reynaers geeft geen garantie op deze verkleving.
Le collage des panneaux doit se faire selon les instructions du fournisseur des panneaux. La garantie Reynaers ne s'applique pas à ce collage.
Glueing of the panels should be done according to the suppliers' instructions. The Reynaers guarantee does not cover this glueing.
Die Verklebung der Füllungen soll gemäß den Richtlinien des Lieferantens gemacht werden. Die Reynaers Garantie gilt aber nicht für diese Verklebung.

PSSI 3

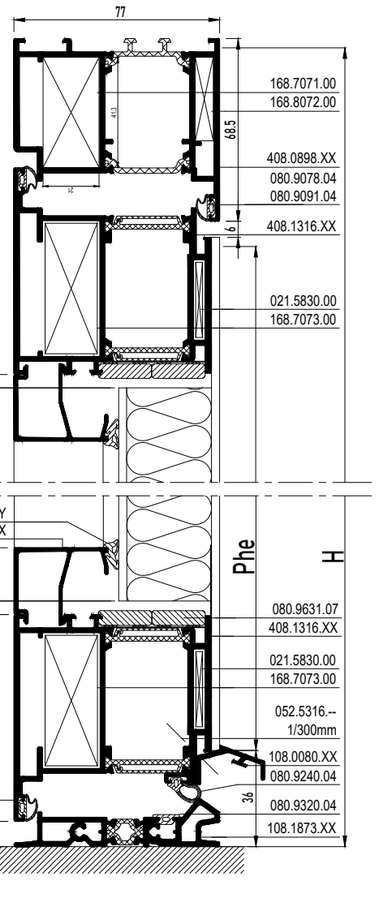

PSSI 1

PSSI 2

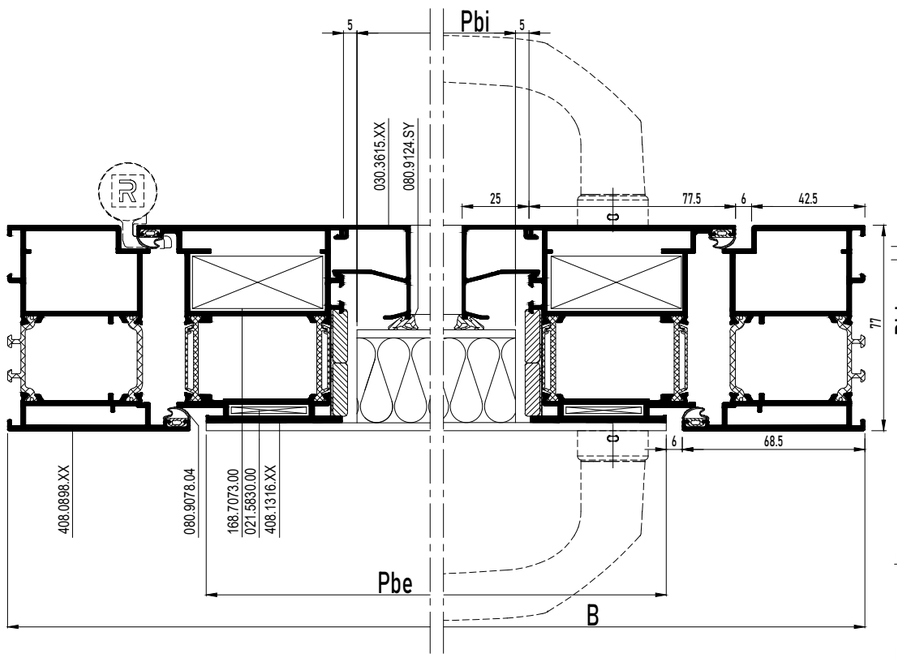

PSSI 5

SECTIONS MASTERLINE 8-Fu Anti Finger Trap Door

Z-T DOOR INWARD OPENING WITH BRUSH - ANTI FINGER TRAP

MASTERLINE 8-Fu

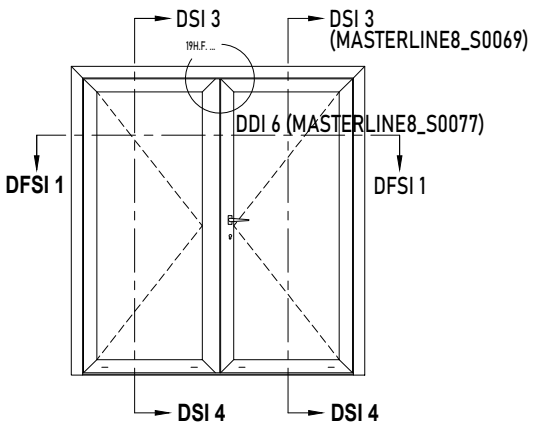

			#	Lm
408.0898.XX			1	B
			1	H
			1	H
408.0026.XX			2	B1 - 62.5
			2	B2 - 62.5
			1	H - 58.5
			2	H - 58.5
408.0014.XX			1	H - 58.5
030.3610.XX			2	B1 - 217.5
			2	B2 - 217.5
			4	H - 263.5
108.0030.XX			1	B1 - 88.5
			1	B2 - 109.5
108.0065.XX			1	H - 57.5
			1	H - 84.5

b1 = B1-233.5
b2 = B2-233.5
h = h - 229.5

≥50mm
ZIE BEGLAZINGSMETHODE
VOIR METHODE DE VITRAGE
SEE GLAZING METHOD
SIEHE VERGLASUNGSWEISE

BESLAG DEUREN > ZIE HARDWARE CONFIGURATOR
ACCESSOIRES PORTES > VOIR HARDWARE CONFIGURATOR
DOORS GEAR > SEE HARDWARE CONFIGURATOR
TUERENBESCHLAG > SIEHE HARDWARE CONFIGURATOR

	#
168.7071.00	2
168.8072.00	2
168.7073.00	6
168.8074.00	8
068.8808.00	2
160.8750.--	8
069.8511.04	1
069.8512.04	1
069.6831.XX	PROD STEPS
169.8748.04	PROD STEPS
069.8426.04	2
052.5316.--	4
081.9236.04	2 x (60.5mm)
081.9141.04	PROD STEPS
080.9078.04	(2xB)+(6xH)
080.9091.04	3
080.9125.SY	(2xb1)+(2xb2)
	+(4xh)
180.9114.SY	(2xb1)+(2xb2)
	+(4xh)
180.9630.07	(2xb1)+(2xb2)
	+(4xh)
052.5315.--	1/300mm
052.5316.--	1/300mm
080.9092.04	PROD STEPS
069.8675.04	1
069.8675.04	1
069.8670.04	1

DFSI 1

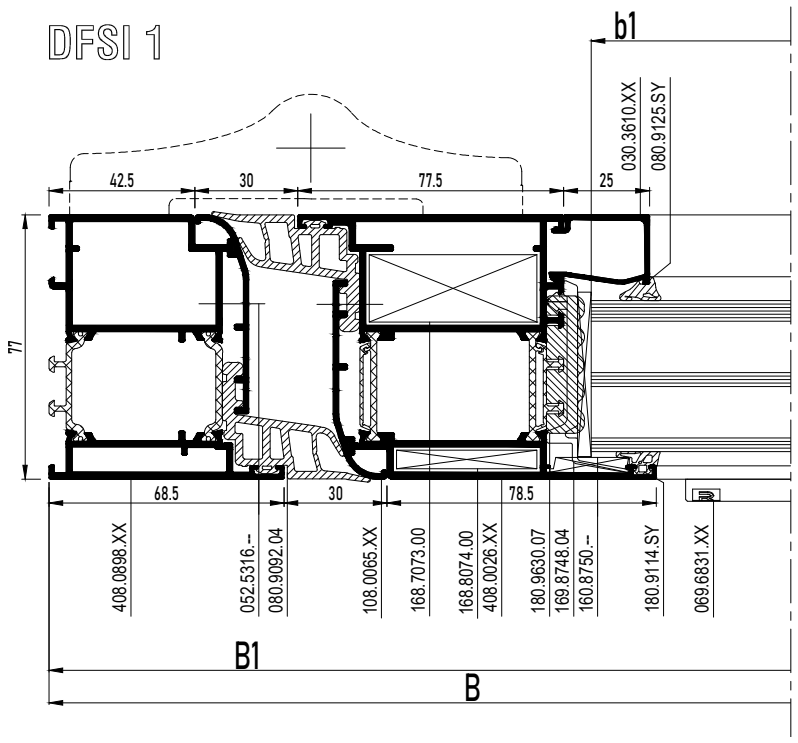

DSI 4

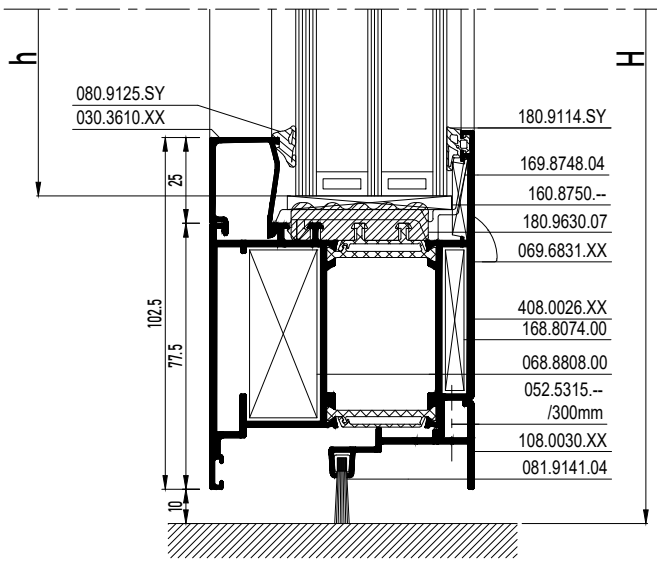

SECTIONS MASTERLINE 8-Fu Panel Door

Z-T PANEL DOOR INWARD OPENING WITH THRESHOLD

MASTERLINE 8-Fu

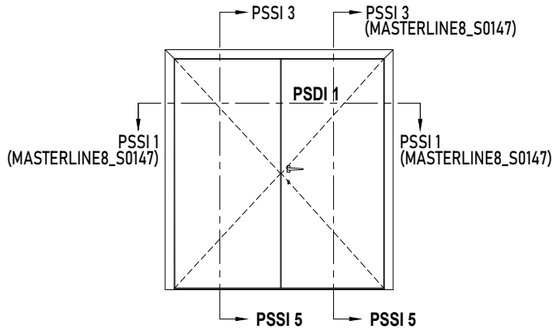

INT. B1	b1 = B1-203.5 h = H-223
INT. B2	b2 = B2-203.5 h = H-223
EXT. B1	Pb1 = B1-64.5 Ph = H-110.5
EXT. B2	Pb2 = B2-90.5 Ph = H-110.5

	#	Lm
408.0898.XX	1	B
	1	H
	1	H
408.1316.XX	2	B1 - 38.5
	2	B2 - 38.5
	3	H - 58
408.1314.XX	1	H - 88
108.0080.XX	1	B1 - 58.5
	1	B2 - 74.5
108.1873.XX	1	B - 143
030.3615.XX	2	B1 - 193.5
	2	B2 - 193.5
	4	H - 263.5

	#
168.7071.00	2
168.8072.00	2
168.7073.00	6
168.7088.00	2
069.8360.04	1
052.5313.--	4
052.5316.--	4
069.8426.04	4
052.5316.--	8
069.8427.04	2
069.8373.04	1
069.8511.04	1
069.8512.04	1
169.8522.04	2
080.9078.04	(3xB)+(5xH)
080.9094.04	(1xH)
080.9240.04	(1xB)
080.9320.04	(1xB)
080.9124.SY	(2xb1)+(2xb2)
	+(4xh)
080.9631.07	(4xb1)+(4xb2)
	+(8xh)
052.5312.--	1/300mm
052.5316.--	1/300mm

BESLAG DEUREN > ZIE "HARDWARE CONFIGURATOR"
ACCESSOIRES PORTES > VOIRE "HARDWARE CONFIGURATOR"
DOORS GEAR > SEE "HARDWARE CONFIGURATOR"
TUERENBESCHLAG > SIEHE "HARDWARE CONFIGURATOR"

Het verkleven van de panelen moet gebeuren volgens de voorschriften van de leverancier van de panelen. Reynaers geeft geen garantie op deze verkleving.
Le collage des panneaux doit se faire selon les instructions du fournisseur des panneaux. La garantie Reynaers ne s'applique pas à ce collage.
Glueing of the panels should be done according to the suppliers' instructions. The Reynaers guarantee does not cover this glueing.
Die Verklebung der Füllungen soll gemäß den Richtlinien des Lieferantens gemacht werden. Die Reynaers Garantie gilt aber nicht für diese Verklebung.

PSDI 1

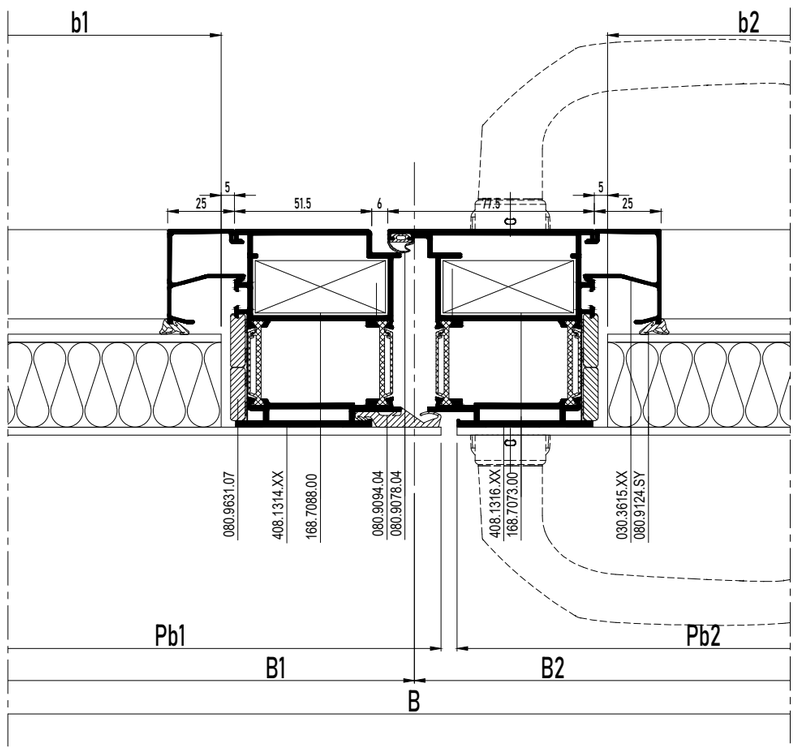

PSSI 5

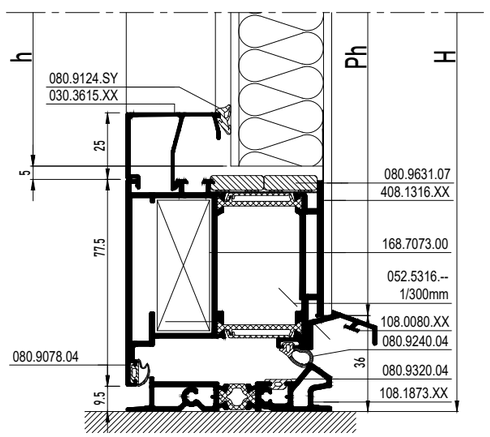

SECTIONS MASTERLINE 8-Fu Anti Finger Trap Door

DOOR OUTWARD OPENING WITH DOUBLE WEATHER STRIP - ANTI FINGER TRAP

MASTERLINE 8-Fu

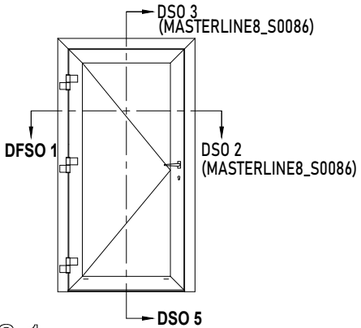

DFSO 1

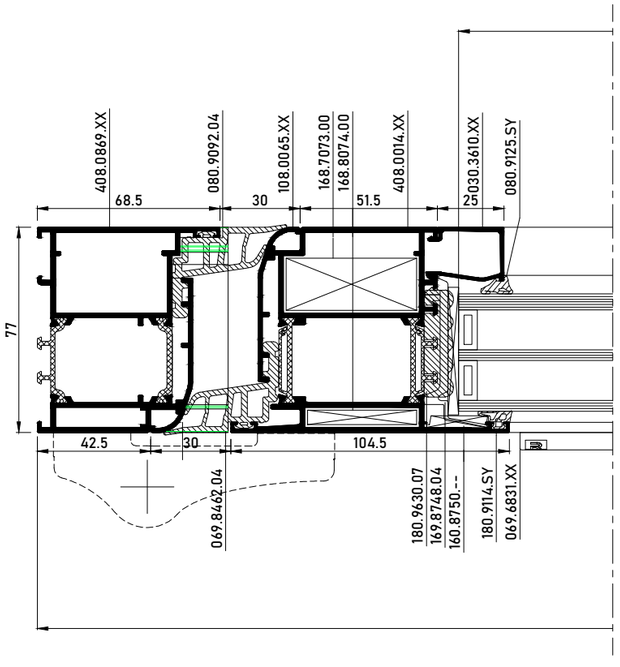

			#	Lm
408.0869.XX			1	B
			1	H
			1	H
408.0014.XX			2	B - 121
			2	H - 58
030.3610.XX			2	B - 276
			2	H - 263
108.0081.XX			1	B - 144
108.1874.XX			1	B - 143
108.0065.XX			1	H - 93.5
			1	H - 83.5

b = B - 292

h = H - 229

ZIE BEGLAZINGSMETHODE
VOIR METHODE DE VITRAGE
SEE GLAZING METHOD
SIEHE VERGLASUNGSWEISE
50mm

BESLAG DEUREN > ZIE "OPENING DOORS"
ACCESSOIRES PORTES > VOIRE "OPENING DOORS"
DOORS GEAR > SEE "OPENING DOORS"
TUERENBESCHLAG > SIEHE "OPENING DOORS"

DSO 5

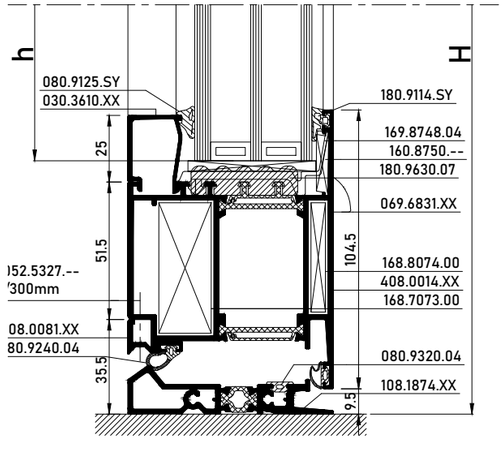

DIN R =

DIN L =

		#
168.7071.00		2
168.8072.00		2
168.7073.00		4
168.8074.00		4
160.8750.--		4
169.8748.04		19.F. ...
052.5327.--		1/300mm
052.5316.--		2
069.6831.XX		19.F....
069.8426.04		1
069.8427.04		1
052.5316.--		2
080.9078.04		(3xB)+(4xH)
080.9091.04		6
080.9320.04		B
080.9240.04		19.F. ...
080.9125.SY		(2xb)+(2xh)
180.9114.SY		(2xb)+(2xh)
180.9630.07		(2xb)+(2xh)
080.9092.04		19H.F. ...
069.8675.04		1
069.8670.04		1
052.5316.--		1/300mm
069.8360.04		1
052.5313.--		2
052.5316.--		2
069.8462.04		1
052.5313.--		2
052.5316.--		2
069.8360.04		1
052.5313.--		2
052.5316.--		2
069.8463.04		1
052.5313.--		2
052.5316.--		2

SECTIONS MASTERLINE 8-Fu Panel Door

PANEL DOOR INWARD OPENING WITH DOOR LATCH

MASTERLINE 8-Fu

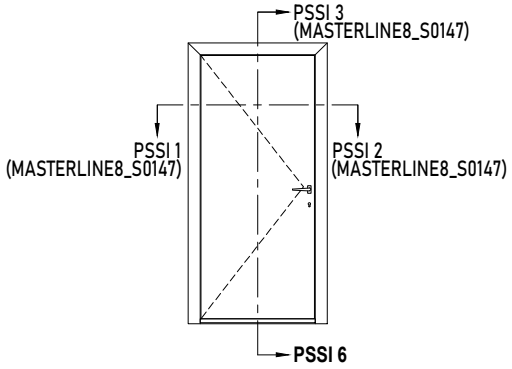

			#	Lm
408.0898.XX			1	B
			1	H
			1	H
408.1316.XX			2	B-97
			2	H-58.5
030.3615.XX			2	B-252
			2	H-263.5

INT.	Pbi = B - 268
	Phi = H - 229.5
EXT.	Pbe = B - 149
	Phe = H - 84.5

		#
168.7071.00		2
168.8072.00		2
168.7073.00		4
021.5830.00		4
169.8513.04		1
052.5316.--		4
169.8510.04		1
069.8426.04		2
052.5316.--		4
081.9236.04		4 x (60.5mm)
081.9092.04		2 x (60.5mm)
080.9078.04		(2xB)+(4xH)
080.9091.04		4
080.9124.SY		(2xb)+(2xh)
081.9040.--		PROD STEPS
080.9631.07		(4xb)+(4xh)

PSSI 6

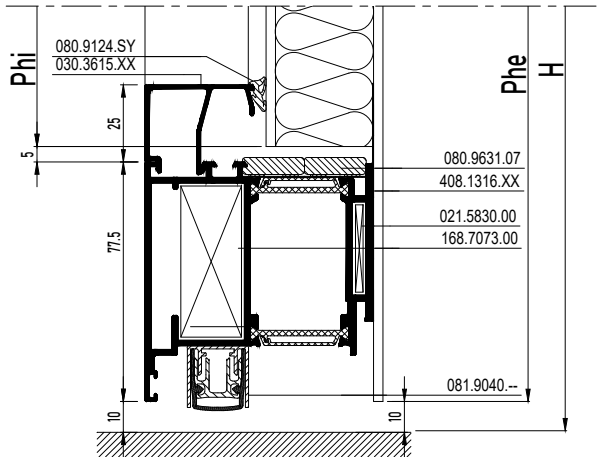

BESLAG DEUREN > ZIE "HARDWARE CONFIGURATOR"
ACCESSOIRES PORTES > VOIRE "HARDWARE CONFIGURATOR"
DOORS GEAR > SEE "HARDWARE CONFIGURATOR"
TUERENBESCHLAG > SIEHE "HARDWARE CONFIGURATOR"

Het verkleven van de panelen moet gebeuren volgens de voorschriften van de leverancier van de panelen. Reynaers geeft geen garantie op deze verkleving.
Le collage des panneaux doit se faire selon les instructions du fournisseur des panneaux. La garantie Reynaers ne s'applique pas à ce collage.
Glueing of the panels should be done according to the suppliers' instructions. The Reynaers guarantee does not cover this glueing.
Die Verklebung der Füllungen soll gemäß den Richtlinien des Lieferantens gemacht werden. Die Reynaers Garantie gilt aber nicht für diese Verklebung.

SECTIONS MASTERLINE 8-Fu Anti Finger Trap Door

DOUBLE CASEMENT DOOR OUTWARD OPENING WITH DOUBLE WEATHER STRIP - ANTI FINGER TRAP

MASTERLINE 8-Fu

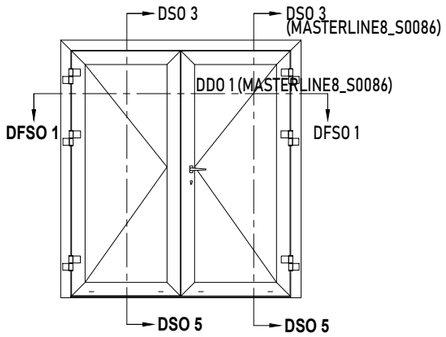

			#	Lm
408.0898.XX			1	B
			1	H
			1	H
408.0014.XX			2	B1 - 75.5
			2	B2 - 75.5
			4	H - 58
108.1815.XX			1	H - 100.5
030.3610.XX			2	B1 - 230.5
			2	B2 - 230.5
			4	H - 263
108.0081.XX			1	B1 - 54.5
			1	B2 - 98.5
108.1874.XX			1	B - 143
108.0065.XX			2	H - 93.5
			2	H - 83.5

b1 = B1 - 246.5
b2 = B2 - 246.5
h = h - 229

≥ 10mm
ZIE BEGLAZINGSMETHODE
VOIR METHODE DE VITRAGE
SEE GLAZING METHOD
SIEHE VERGLASUNGSWEISE

BESLAG DEUREN > ZIE HARDWARE CONFIGURATOR
ACCESSOIRES PORTES > VOIR HARDWARE CONFIGURATOR
DOORS GEAR > SEE HARDWARE CONFIGURATOR
TUERENBESCHLAG > SIEHE HARDWARE CONFIGURATOR

		#
168.7071.00		2
168.8072.00		2
168.7073.00		6
168.8074.00		8
068.8808.00		2
160.8750.--		8
069.8518.04		1
052.5312.--		1
069.6831.XX		PROD STEPS
169.8748.04		PROD STEPS
080.9381.04		(2xh)
052.5327.--		1/300mm
052.5316.--		4
069.8426.04		2
069.8427.04		2
052.5316.--		4
052.5317.--		1/400mm
080.9078.04		(3xB)+(6xH)
080.9091.04		6
080.9240.04		PROD STEPS
080.9320.04		B
080.9125.SY		(2xb1)+(2xb2)
		+(4xh)
180.9114.SY		(2xb1)+(2xb2)
		+(4xh)
180.9630.07		(2xb1)+(2xb2)
		+(4xh)
080.9092.04		PROD STEPS
052.5316.--		1/300mm
069.8675.04		1
069.8676.04		1
069.8670.04		1
069.8462.04		1 (R)
052.5313.--		2
052.5316.--		2
069.8463.04		1 (L)
052.5313.--		2
052.5316.--		2

DFSO 1

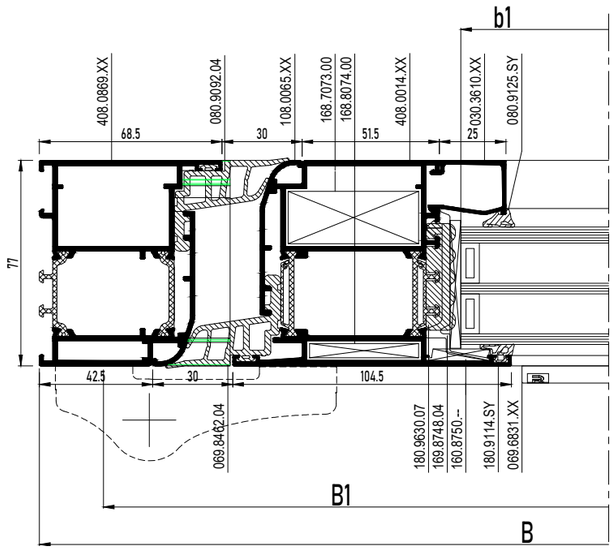

DSO 5

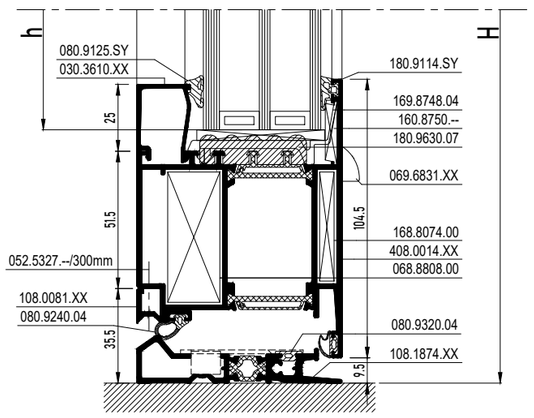

SECTIONS MASTERLINE 8-Fu Panel Door

Z-T PANEL DOOR INWARD OPENING WITH AUTOMATIC DRAUGHT EXCLUDER

MASTERLINE 8-Fu

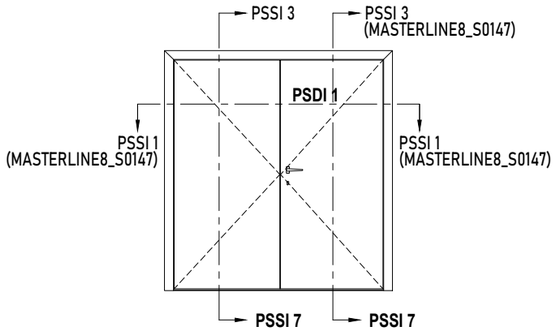

INT. B1	b1 = B1-203.5	h = H-223
INT. B2	b2 = B2-203.5	h = H-223
EXT. B1	Pb1 = B1-64.5	Ph = H-84
EXT. B2	Pb2 = B2-90.5	Ph = H-84

		#	Lm
408.0898.XX		1	B
		1	H
		1	H
408.1316.XX		2	B1 - 38.5
		2	B2 - 38.5
		3	H - 58
408.1314.XX		1	H - 88
030.3615.XX		2	B1 - 193.5
		2	B2 - 193.5
		4	H - 263.5

	#
168.7071.00	2
168.8072.00	2
168.7073.00	6
168.7088.00	2
169.8513.04	1
052.5316.--	4
169.8510.04	2
069.8426.04	4
052.5316.--	8
081.9229.07	6 x (60.5mm)
069.8511.04	1
069.8512.04	1
169.8522.04	2
080.9078.04	(3xB)+(5xH)
080.9124.SY	(2xb1)+(2xb2)
	+(4xh)
080.9094.04	1xH
080.9631.07	(4xb1)+(4xb2)
	+(8xh)
081.9040.--	PROD STEPS
052.5312.--	1/300mm
052.5316.--	1/300mm

PSDI 1

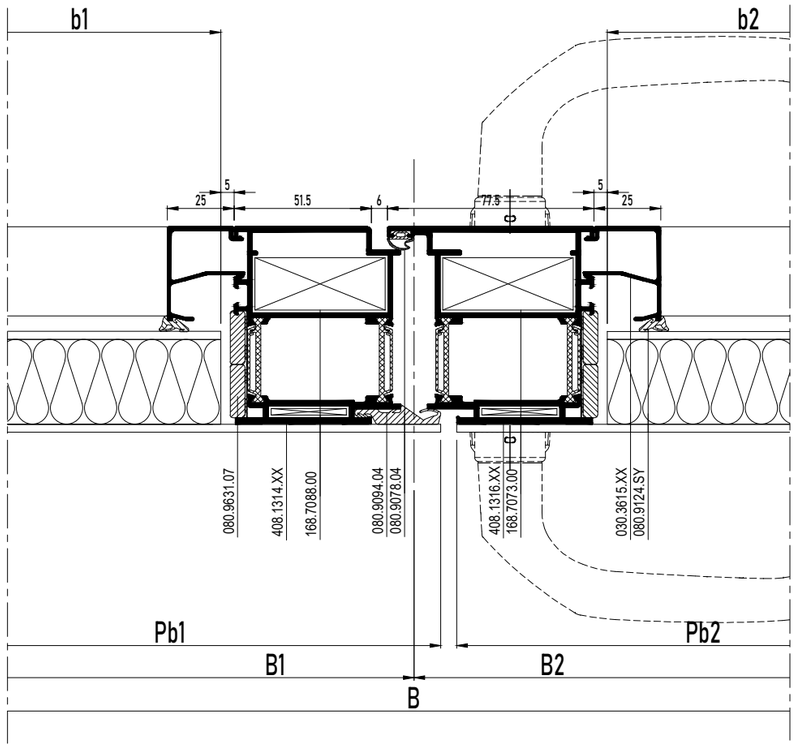

BESLAG DEUREN > ZIE "HARDWARE CONFIGURATOR"
ACCESSOIRES PORTES > VOIRE "HARDWARE CONFIGURATOR"
DOORS GEAR > SEE "HARDWARE CONFIGURATOR"
TUERENBESCHLAG > SIEHE "HARDWARE CONFIGURATOR"

Het verkleven van de panelen moet gebeuren volgens de voorschriften van de leverancier van de panelen. Reynaers geeft geen garantie op deze verkleving.
Le collage des panneaux doit se faire selon les instructions du fournisseur des panneaux. La garantie Reynaers ne s'applique pas à ce collage.
Glueing of the panels should be done according to the suppliers' instructions. The Reynaers guarantee does not cover this glueing.
Die Verklebung der Füllungen soll gemäß den Richtlinien des Lieferantens gemacht werden. Die Reynaers Garantie gilt aber nicht für diese Verklebung.

PSSI 7

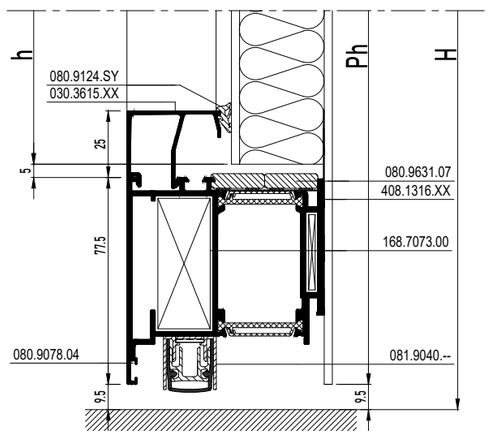

SECTIONS MASTERLINE 8-Fu Anti Finger Trap Door

Z-T DOOR OUTWARD OPENING WITH DOUBLE WEATHER STRIP - ANTI FINGER TRAP

MASTERLINE 8-Fu

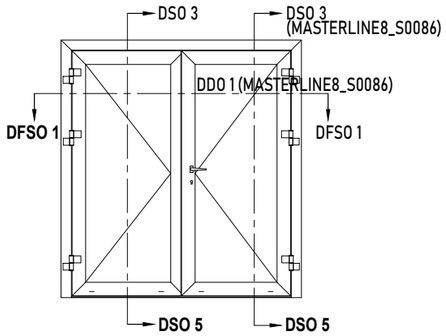

			#	Lm
408.0869.XX			1	B
			1	H
			1	H
408.0014.XX			2	B1 - 62.5
			2	B2 - 62.5
			3	H - 58
408.0026.XX			1	H - 58
030.3610.XX			2	B1 - 217.5
			2	B2 - 217.5
			4	H - 263
108.0081.XX			1	B1 - 67.5
			1	B2 - 85.5
108.1874.XX			1	B-143
108.0065.XX			1	H - 93.5
			1	H - 83.5

b1 = B1-233.5
b2 = B2-233.5
h = H - 229

≥ 50mm
ZIE BEGLAZINGSMETHODE
VOIR METHODE DE VITRAGE
SEE GLAZING METHOD
SIEHE VERGLASUNGSWEISE

BESLAG DEUREN > ZIE HARDWARE CONFIGURATOR
ACCESSOIRES PORTES > VOIR HARDWARE CONFIGURATOR
DOORS GEAR > SEE HARDWARE CONFIGURATOR
TUERENBESCHLAG > SIEHE HARDWARE CONFIGURATOR

		#
168.7071.00		2
168.8072.00		2
168.7073.00		6
168.8074.00		8
068.8808.00		2
160.8750.--		8
069.8511.04		1
069.8512.04		1
069.6831.XX		PROD STEPS
169.8748.04		PROD STEPS
052.5316.--		4
052.5327.--		1/300mm
069.8426.04		2
069.8427.04		2
052.5316.--		4
080.9320.04		B
080.9078.04		(3xB)+(6xH)
080.9091.04		6
080.9240.04		PROD STEPS
080.9125.SY		(2xb1)+(2xb2)
		+(4xh)
180.9114.SY		(2xb1)+(2xb2)
		+(4xh)
180.9630.07		(2xb1)+(2xb2)
		+(4xh)
052.5316.--		1/300mm
080.9092.04		PROD STEPS
069.8675.04		1
069.8675.04		1
069.8670.04		1
069.8462.04		1 (R)
052.5313.--		2
052.5316.--		2
069.8463.04		1 (L)
052.5313.--		2
052.5316.--		2

DFSO 1

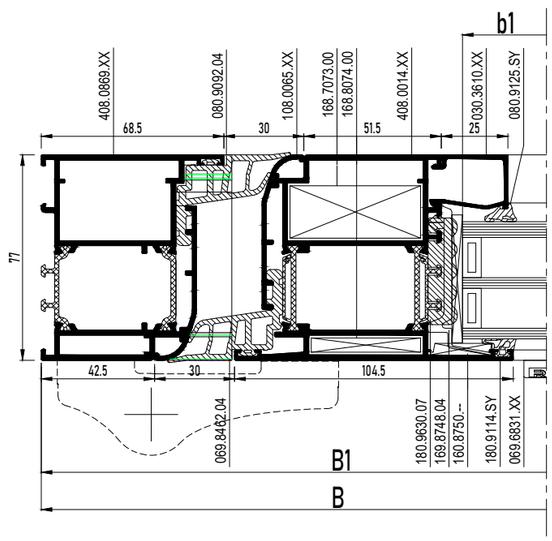

DSO 5

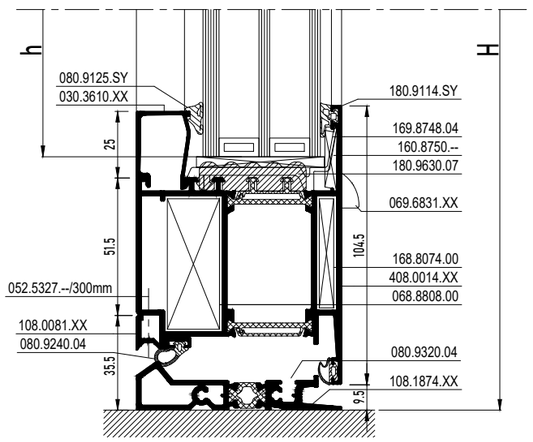

SECTIONS MASTERLINE 8-Fu Panel Door

PANEL DOOR INWARD OPENING WITH BRUSH

MASTERLINE 8-Fu

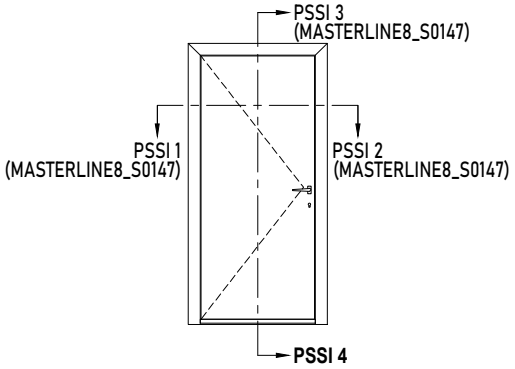

PSSI 4

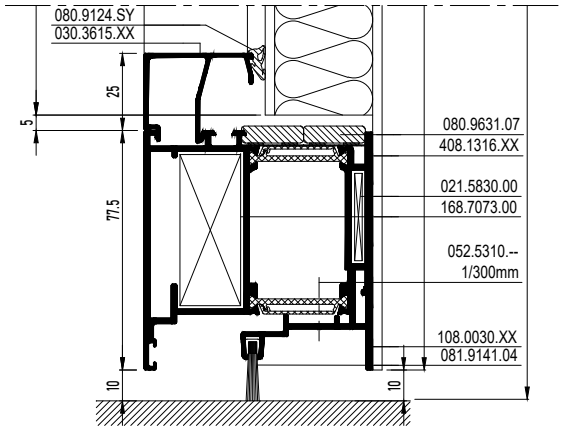

			#	Lm
408.0898.XX			1	B
			1	H
			1	H
408.1316.XX			2	B - 97
			2	H - 58.5
030.3615.XX			2	B - 252
			2	H - 263.5
108.0030.XX			1	B - 139

INT.	Pbi = B - 268
	Phi = H - 229.5
EXT.	Pbe = B - 149
	Phe = H - 84.5

BESLAG DEUREN > ZIE "HARDWARE CONFIGURATOR "
ACCESSOIRES PORTES > VOIRE "HARDWARE CONFIGURATOR "
DOORS GEAR > SEE "HARDWARE CONFIGURATOR "
TUERENBESCHLAG > SIEHE "HARDWARE CONFIGURATOR "

		#
168.7071.00		2
168.8072.00		2
168.7073.00		4
021.5830.00		4
169.8513.04		1
052.5316.--		4
069.8426.04		2
052.5316.--		4
069.8511.04		1
069.8512.04		1
169.8522.04		2
052.5310.--		1/300mm
080.9078.04		(2xB)+(4xH)
080.9091.04		4
080.9124.SY		(2xb)+(2xh)
081.9236.04		4 x (60.5mm)
081.9092.04		2 x (60.5mm)
081.9141.04		PROD STEPS
080.9631.07		(4xb)+(4xh)

Het verkleven van de panelen moet gebeuren volgens de voorschriften van de leverancier van de panelen. Reynaers geeft geen garantie op deze verkleving.
Le collage des panneaux doit se faire selon les instructions du fournisseur des panneaux. La garantie Reynaers ne s'applique pas à ce collage.
Glueing of the panels should be done according to the suppliers' instructions. The Reynaers guarantee does not cover this glueing.
Die Verklebung der Füllungen soll gemäß den Richtlinien des Lieferantens gemacht werden. Die Reynaers Garantie gilt aber nicht für diese Verklebung.

SECTIONS MASTERLINE 8-Fu Anti Finger Trap Door

DOOR OUTWARD OPENING WITH BRUSH - ANTI FINGER TRAP

MASTERLINE 8-Fu

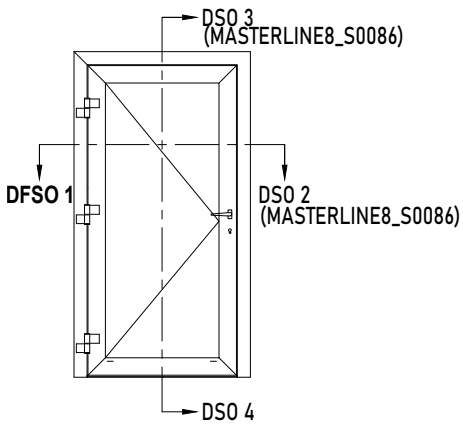

			#	Lm
408.0869.XX			1	B
			1	H
			1	H
408.0014.XX			2	B-121
			2	H-58.5
030.3610.XX			2	B-276
			2	H-263.5
108.0030.XX			1	B - 168
108.0065.XX			1	H - 84.5
			1	H - 57.5

b = B - 292
h1= H - 229.5

≥ 50mm
ZIE BEGLAZINGSMETHODE
VOIR METHODE DE VITRAGE
SEE GLAZING METHOD
SIEHE VERGLASUNGSWEISE

BESLAG DEUREN > ZIE HARDWARE CONFIGURATOR
ACCESSOIRES PORTES > VOIR HARDWARE CONFIGURATOR
DOORS GEAR > SEE HARDWARE CONFIGURATOR
TUERENBESCHLAG > SIEHE HARDWARE CONFIGURATOR

	#
168.7071.00	2
168.8072.00	2
168.7073.00	4
168.8074.00	4
160.8750.--	4
169.8748.04	PROD STEPS
052.5315.--	1/300mm
069.6831.XX	PROD STEPS
169.8513.04	1
052.5316.--	2
069.8426.04	1
052.5316.--	2
081.9236.04	2 x (60.5mm)
081.9092.04	1 x (60.5mm)
081.9141.04	PROD STEPS
080.9078.04	(2xB)+(2xH)
080.9091.04	2
080.9125.SY	(2xb)+(2xh)
180.9114.SY	(2xb)+(2xh)
180.9630.07	(2xb)+(2xh)
080.9092.04	PROD STEPS
069.8676.04	1
069.8670.04	1
052.5316.--	1/300mm

DFSO 1

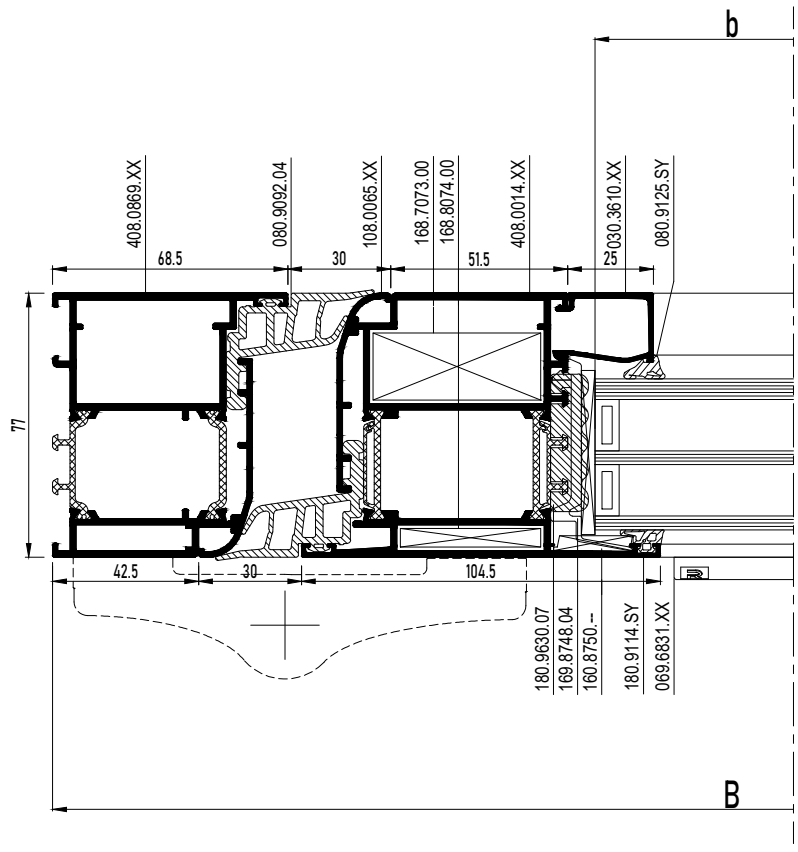

DSO 4

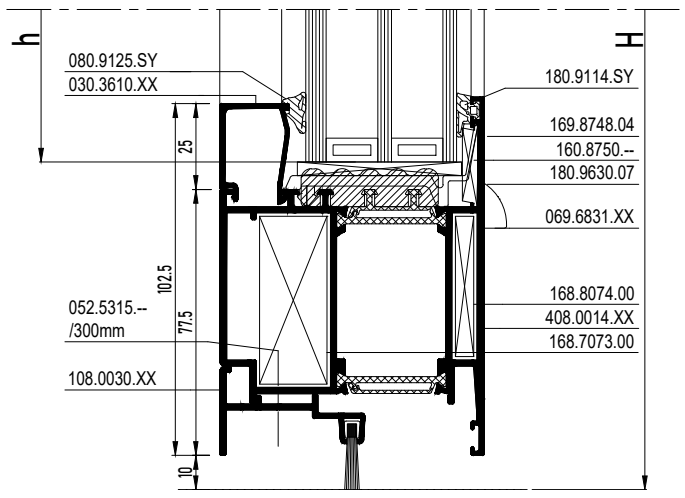

SECTIONS MASTERLINE 8-Fu Panel Door

Z-T PANEL DOOR INWARD OPENING WITH BRUSH

MASTERLINE 8-Fu

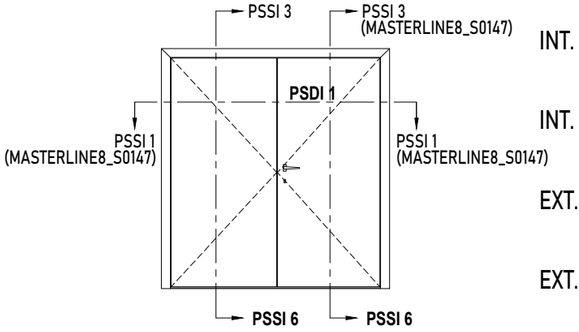

INT. B1	b1 = B1-203.5
	h = H-223
INT. B2	b2 = B2-203.5
	h = H-223
EXT. B1	Pb1 = B1-64.5
	Ph = H-84.5
EXT. B2	Pb2 = B2-90.5
	Ph = H-84.5

	#	Lm
408.0898.XX	1	B
	1	H
	1	H
408.1316.XX	2	B1 - 38.5
	2	B2 - 38.5
	3	H - 58
408.1314.XX	1	H - 88
108.0030.XX	1	B1-59.5 ?
	1	B2-84.5
030.3615.XX	2	B1 - 193.5
	2	B2 - 193.5
	4	H - 263.5

	#
168.7071.00	2
168.8072.00	2
168.7073.00	6
168.7088.00	2
169.8513.04	1
052.5316.--	4
069.8426.04	4
052.5316.--	8
081.9236.04	6 x (60.5mm)
081.9092.04	2 x (60.5mm)
081.9141.04	PROD STEPS
069.8511.04	1
069.8512.04	1
169.8522.04	2
080.9078.04	(3xB)+(5xH)
080.9094.04	(1xH)
080.9124.SY	(2xb1)+(2xb2)
	+(4xh)
080.9631.07	(4xb1)+(4xb2)
	+(8xh)
052.5312.--	1/300mm
052.5316.--	1/300mm

PSDI 1

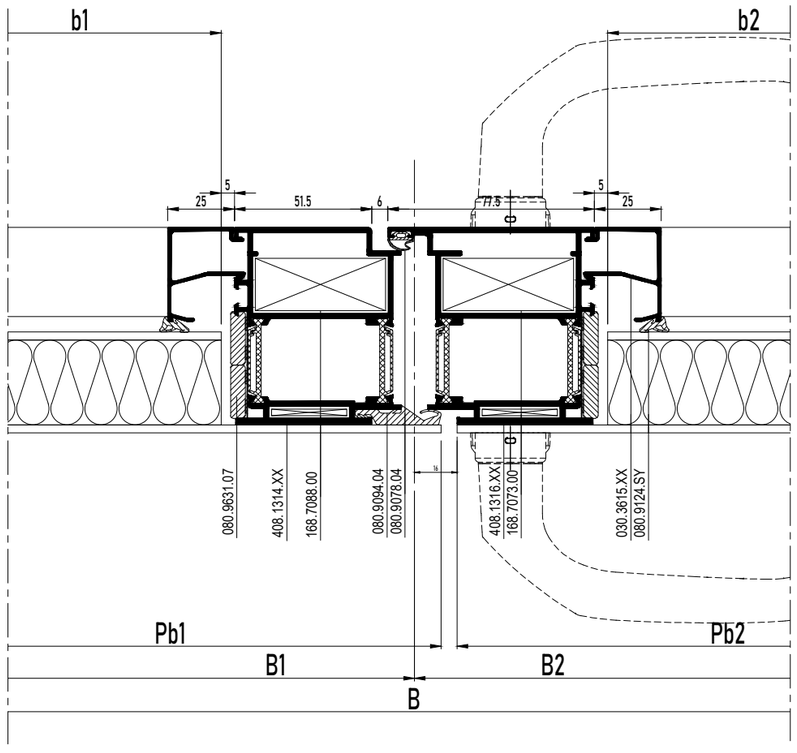

BESLAG DEUREN > ZIE "HARDWARE CONFIGURATOR "
ACCESSOIRES PORTES > VOIRE "HARDWARE CONFIGURATOR "
DOORS GEAR > SEE "HARDWARE CONFIGURATOR "
TUERENBESCHLAG > SIEHE "HARDWARE CONFIGURATOR "

Het verkleven van de panelen moet gebeuren volgens de voorschriften van de leverancier van de panelen. Reynaers geeft geen garantie op deze verkleving.
Le collage des panneaux doit se faire selon les instructions du fournisseur des panneaux. La garantie Reynaers ne s'applique pas à ce collage.
Glueing of the panels should be done according to the suppliers' instructions. The Reynaers guarantee does not cover this glueing.
Die Verklebung der Füllungen soll gemäß den Richtlinien des Lieferantens gemacht werden. Die Reynaers Garantie gilt aber nicht für diese Verklebung.

PSSI 6

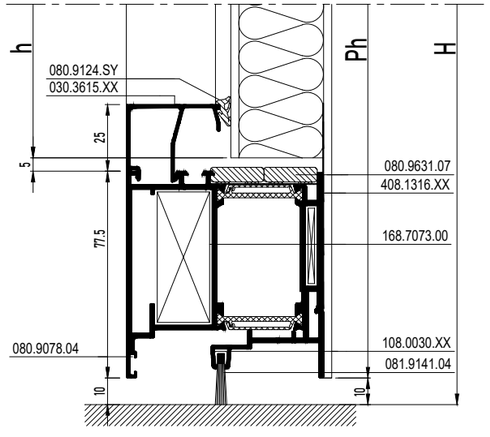

SECTIONS MASTERLINE 8-Fu Anti Finger Trap Door

DOUBLE CASEMENT DOOR OUTWARD OPENING WITH BRUSH - ANTI FINGER TRAP

MASTERLINE 8-Fu

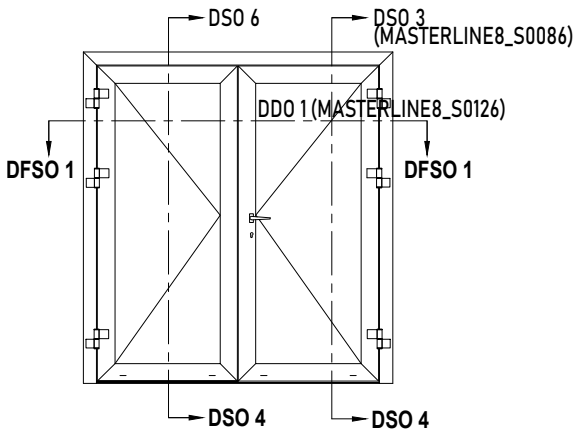

			#	Lm
408.0898.XX			1	B
			1	H
			1	H
408.0014.XX			2	B1 - 75.5
			2	B2 - 75.5
			4	H - 58.5
108.1815.XX			1	H - 79.5
030.3610.XX			2	B1 - 230.5
			2	B2 - 230.5
			4	H - 263.5
108.0030.XX			1	B1 - 122.5
			1	B2 - 122.5
108.0065.XX			2	H - 84.5
			2	H - 57.5

b1 = B1 - 246.5
b2 = B2 - 246.5
h = h - 229.5

≥ 50mm
ZIE BEGLAZINGSMETHODE
VOIR METHODE DE VITRAGE
SEE GLAZING METHOD
SIEHE VERGLASUNGSWEISE

BESLAG DEUREN > ZIE HARDWARE CONFIGURATOR
ACCESSOIRES PORTES > VOIRE HARDWARE CONFIGURATOR
DOORS GEAR > SEE HARDWARE CONFIGURATOR
TUERENBESCHLAG > SIEHE HARDWARE CONFIGURATOR

		#
168.7071.00		2
168.8072.00		2
168.7073.00		6
168.8074.00		8
068.8808.00		2
160.8750.--		8
069.8518.04		1
052.5312.--		1
069.6831.XX		PROD STEPS
169.8748.04		PROD STEPS
069.8426.04		2
052.5316.--		4
081.9236.04		2 x (60.5mm)
081.9141.04		PROD STEPS
080.9381.04		(2xh)
080.9078.04		(2xB)+(6xH)
080.9091.04		3
080.9126.SY		(2xb1)+(2xb2)
		+(4xh)
180.9114.SY		(2xb1)+(2xb2)
		+(4xh)
180.9630.07		(2xb1)+(2xb2)
		+(4xh)
080.9092.04		PROD STEPS
069.8675.04		1
069.8676.04		1
069.8670.04		1
052.5315.--		1/300mm
052.5316.--		1/300mm
052.5317.--		1/400mm
052.5318.--		1/300mm

DFSO 1

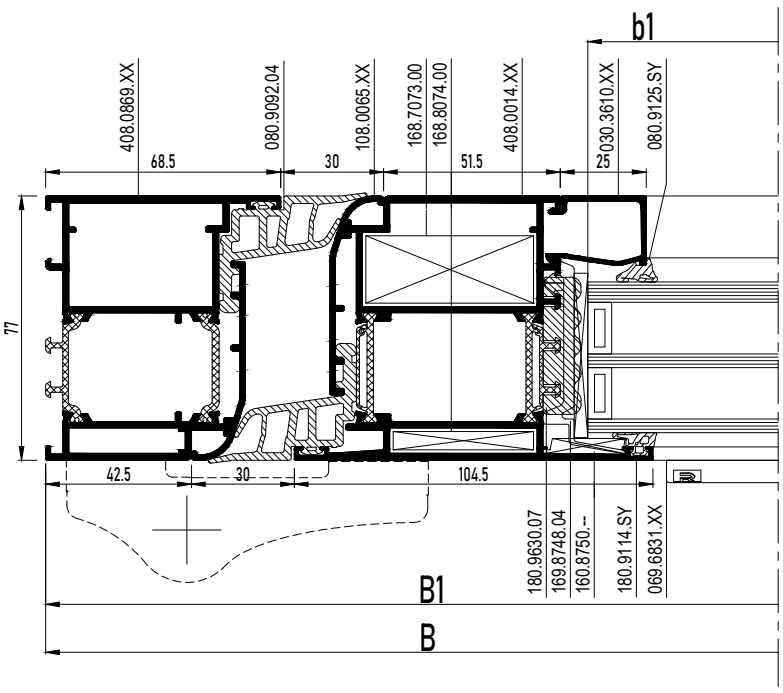

DSO 4

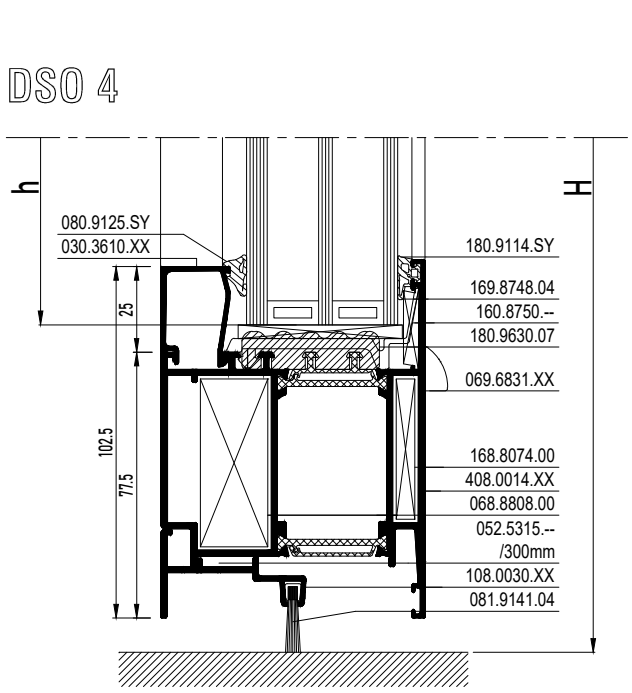

SECTIONS MASTERLINE 8-Fu Panel Door

PANEL DOOR DOUBLE SIDED INWARD OPENING WITH DOUBLE WEATHER STRIP

MASTERLINE 8-Fu

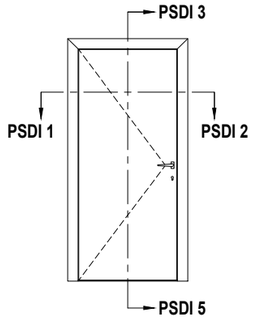

			#	L_m
408.0898.XX			1	B
			1	H
			1	H
408.1334.XX			2	B-127
			2	H-88
108.0080.XX			1	B - 133
108.1873.XX			1	B - 143

	#
168.7071.00	2
168.8072.00	2
168.7073.00	4
021.5830.00	4
069.8360.04	1
052.5313.--	4
052.5316.--	4
069.8426.04	2
052.5316.--	4
069.8427.04	2
052.5310.--	1/300mm
069.8373.04	1
080.9078.04	(2xB)+(4xH)
080.9320.04	B
080.9240.04	PROD STEPS
080.9094.04	(2xB)+(2xH)
080.9631.07	(6xB)
	(8xH)

INT.	Pbi = B - 97
	Phi = H - 58
EXT.	Pbe = B - 149
	Phe = H - 110.5

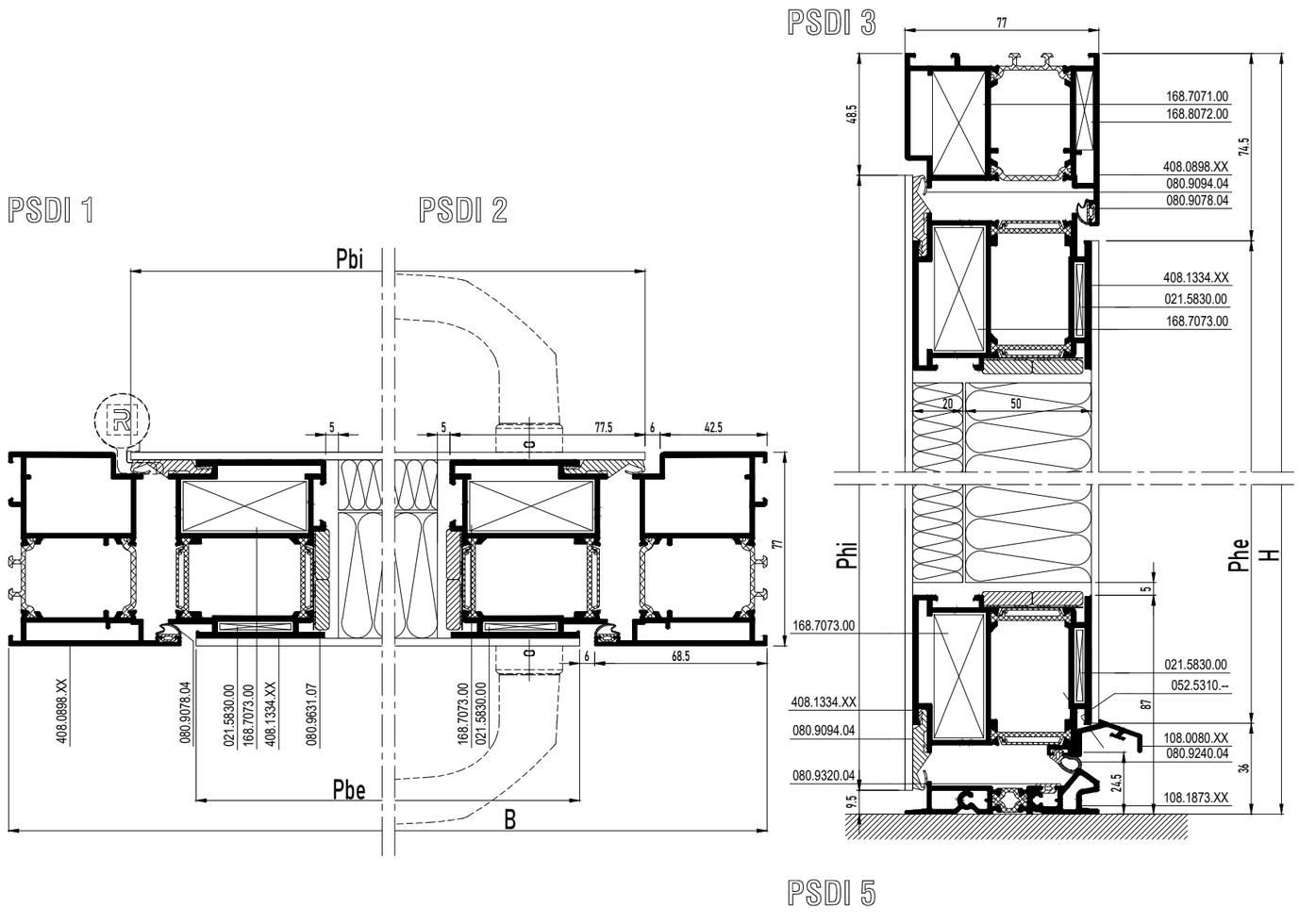

BESLAG DEUREN > ZIE "HARDWARE CONFIGURATOR"
ACCESSOIRES PORTES > VOIRE "HARDWARE CONFIGURATOR"
DOORS GEAR > SEE "HARDWARE CONFIGURATOR"
TUERENBESCHLAG > SIEHE "HARDWARE CONFIGURATOR"

Het verkleven van de panelen moet gebeuren volgens de voorschriften van de leverancier van de panelen. Reynaers geeft geen garantie op deze verkleving.
Le collage des panneaux doit se faire selon les instructions du fournisseur des panneaux. La garantie Reynaers ne s'applique pas à ce collage.
Glueing of the panels should be done according to the suppliers' instructions. The Reynaers guarantee does not cover this glueing.
Die Verklebung der Füllungen soll gemäß den Richtlinien des Lieferantens gemacht werden. Die Reynaers Garantie gilt aber nicht für diese Verklebung.

SECTIONS MASTERLINE 8-Fu Anti Finger Trap Door

Z-T DOOR OUTWARD OPENING WITH BRUSH - ANTI FINGER TRAP

MASTERLINE 8-Fu

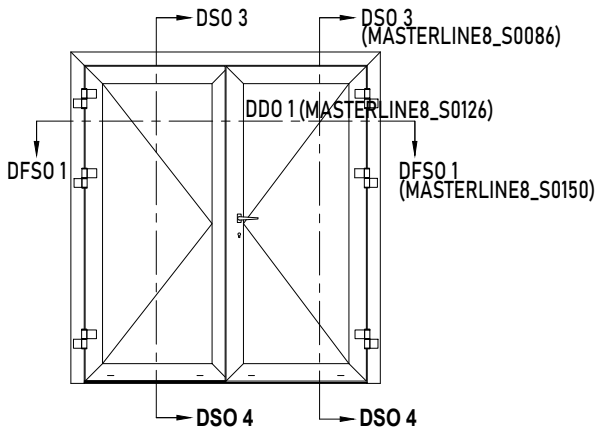

			#	Lm
408.0869.XX			1	B
			1	H
			1	H
408.0014.XX			2	B1 - 62.5
			2	B2 - 62.5
			3	H - 58.5
408.0026.XX			1	H - 58.5
030.3610.XX			2	B1 - 217.5
			2	B2 - 217.5
			4	H - 263.5
108.0030.XX			1	B1 - 109.5
			1	B2 - 88.5
108.0065.XX			1	H - 57.5
			1	H - 84.5

b1 = B1-233.5
b2 = B2-233.5
h = h - 229.5

≥ 50mm
ZIE BEGLAZINGSMETHODE
VOIR METHODE DE VITRAGE
SEE GLAZING METHOD
SIEHE VERGLASUNGSWEISE

BESLAG DEUREN > ZIE HARDWARE CONFIGURATOR
ACCESSOIRES PORTES > VOIR HARDWARE CONFIGURATOR
DOORS GEAR > SEE HARDWARE CONFIGURATOR
TUERENBESCHLAG > SIEHE HARDWARE CONFIGURATOR

		#
168.7071.00		2
168.8072.00		2
168.7073.00		6
168.8074.00		6
168.7088.00		2
160.8750.--		8
069.8511.04		1
069.8512.04		1
069.6831.XX		PROD STEPS
169.8748.04		PROD STEPS
069.8426.04		2
052.5316.--		4
081.9236.04		2 x (60.5mm)
081.9141.04		PROD STEPS
080.9078.04		(2xB)+(6xH)
080.9091.04		3
080.9125.SY		(2xb1)+(2xb2)
		+(4xh)
180.9114.SY		(2xb1)+(2xb2)
		+(4xh)
180.9630.07		(2xb1)+(2xb2)
		+(4xh)
052.5315.--		1/300mm
052.5316.--		1/300mm
069.8675.04		1
069.8676.04		1
069.8670.04		2
080.9092.04		PROD STEPS

DSO 3

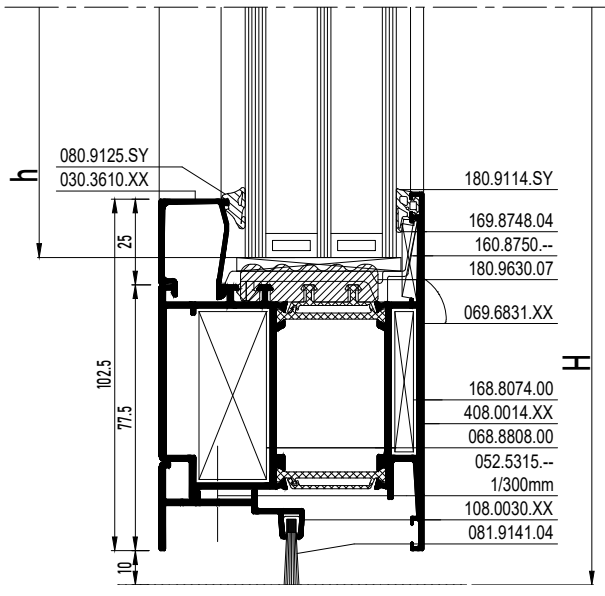

SECTIONS MASTERLINE 8-Fu Panel Door

Z-T PANEL DOOR DOUBLE SIDED INWARD OPENING WITH THRESHOLD

MASTERLINE 8-Fu

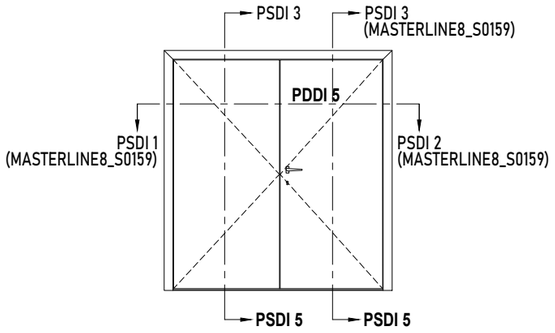

INT. B1	Pbi1 = B1-64.5
	Phi = H-58
INT. B2	Pbi2 = B2-38.5
	Phi = H-58
EXT. B1	Pbe1 = B1-64.5
	Phe = H-110.5
EXT. B2	Pbe2 = B2-90.5
	Phe = H-110.5

			#	Lm
408.0898.XX			1	B
			1	H
			1	H
408.1334.XX			2	B1 - 68.5
			2	B2 - 68.5
			4	H - 88.2
108.0080.XX			1	B1 - 58.5
			1	B2 - 74.5
108.1873.XX			1	B - 143

		#
168.7071.00		2
168.8072.00		2
168.7073.00		6
168.7088.00		2
021.5830.00		8
069.8360.04		1
052.5313.--		4
052.5316.--		4
069.8426.04		4
052.5316.--		8
069.8427.04		2
069.8373.04		2
169.8522.04		2
080.9078.04		(1xB)+(2xH)
080.9094.04		(2xB1)+(2xB2)
		(4xH)
080.9240.04		(1xB)
080.9320.04		(1xB)
080.9631.07		(4xB1)+(4xB2)
		(8xH)
052.5310.--		1/300mm

BESLAG DEUREN > ZIE "HARDWARE CONFIGURATOR"
ACCESSOIRES PORTES > VOIRE "HARDWARE CONFIGURATOR"
DOORS GEAR > SEE "HARDWARE CONFIGURATOR"
TUERENBESCHLAG > SIEHE "HARDWARE CONFIGURATOR"

Het verkleven van de panelen moet gebeuren volgens de voorschriften van de leverancier van de panelen. Reynaers geeft geen garantie op deze verkleving.
Le collage des panneaux doit se faire selon les instructions du fournisseur des panneaux. La garantie Reynaers ne s'applique pas à ce collage.
Glueing of the panels should be done according to the suppliers' instructions. The Reynaers guarantee does not cover this glueing.
Die Verklebung der Füllungen soll gemäß den Richtlinien des Lieferantens gemacht werden. Die Reynaers Garantie gilt aber nicht für diese Verklebung.

PDDI 5

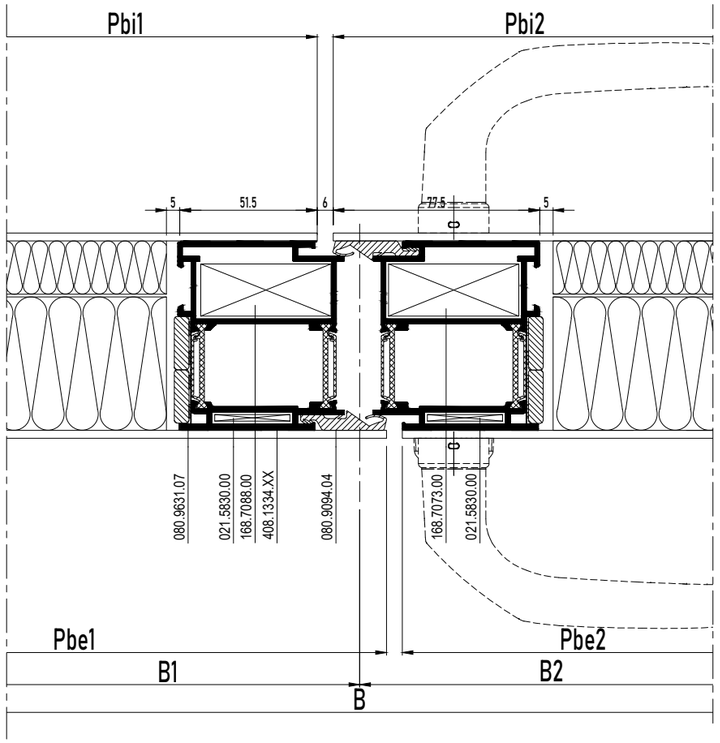

PSDI 5

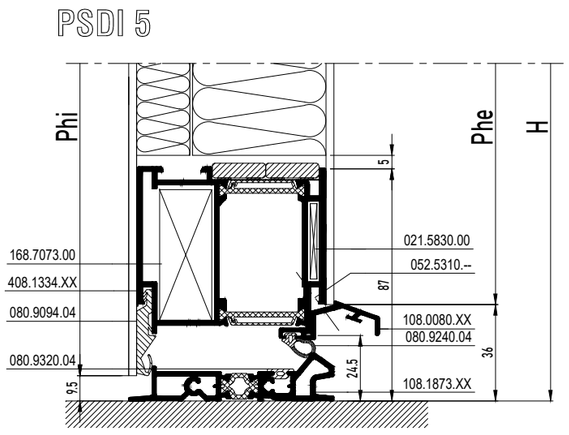

SECTIONS MASTERLINE 8-Fu Panel Door

PANEL DOOR OUTW. OPENING WITH DOUBLE WEATHER STRIP

MASTERLINE 8-Fu

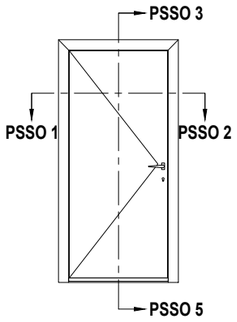

			#	Lm
408.0869.XX			1	B
			1	H
			1	H
408.1314.XX			2	B-127
			2	H-88
030.3615.XX			2	B-252
			2	H-263
108.1874.XX			1	B - 143
108.0081.XX			1	B - 127

		#
168.7071.00		2
168.8072.00		2
168.7073.00		4
021.5830.00		4
069.8426.04		2
069.8427.04		2
052.5316.--		4
069.8360.04		1
052.5313.--		4
052.5316.--		4
052.5310.--		1/300mm
080.9078.04		(1xB)+(2xH)
080.9124.SY		(2xb)+(2xh)
080.9320.04		B
080.9240.04		PROD STEPS
080.9094.04		(2xB)+(2xH)
080.9631.07		(4xb)+(4xh)

INT.

Pbi = B - 262
Phi = H - 223

EXT.

Pbe = B - 97
Phe = H - 58

BESLAG DEUREN > ZIE HARDWARE CONFIGURATOR
ACCESSOIRES PORTES > VOIR HARDWARE CONFIGURATOR
DOORS GEAR > SEE HARDWARE CONFIGURATOR
TUERENBESCHLAG > SIEHE HARDWARE CONFIGURATOR

Het verkleven van de panelen moet gebeuren volgens de voorschriften van de leverancier van de panelen. Reynaers geeft geen garantie op deze verkleving.
Le collage des panneaux doit se faire selon les instructions du fournisseur des panneaux. La garantie Reynaers ne s'applique pas à ce collage.
Glueing of the panels should be done according to the suppliers' instructions. The Reynaers guarantee does not cover this glueing.
Die Verklebung der Füllungen soll gemäß den Richtlinien des Lieferantens gemacht werden. Die Reynaers Garantie gilt aber nicht für diese Verklebung.

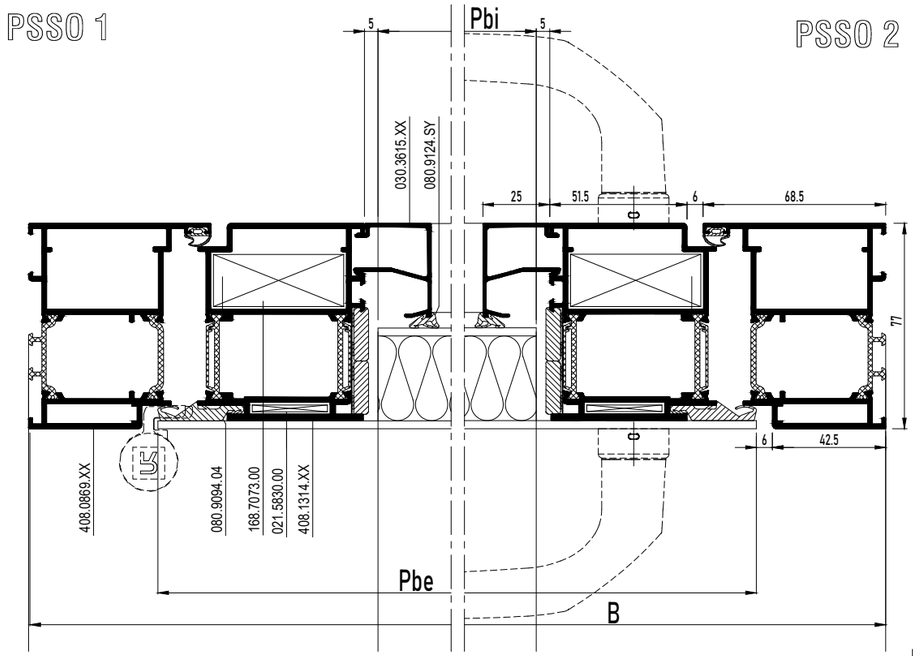

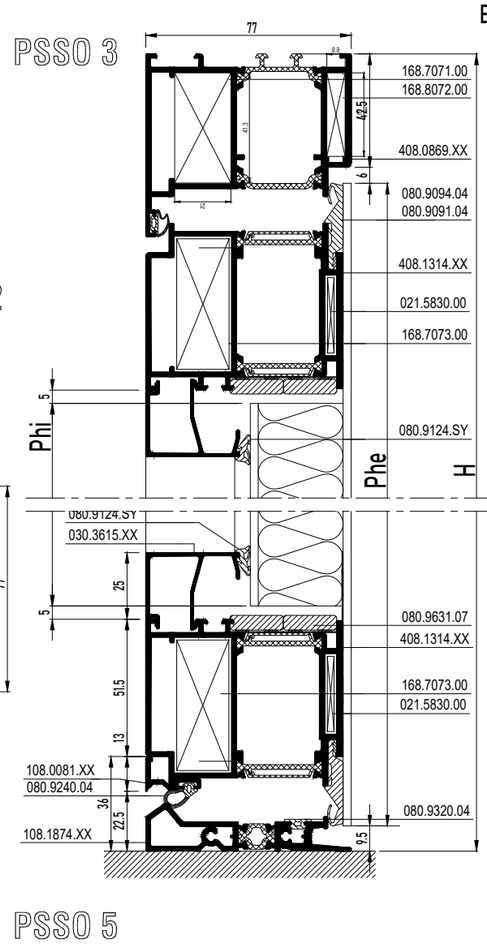

SECTIONS MASTERLINE 8-Fu Panel Door

PANEL DOOR DOUBLE SIDED INWARD OPENING WITH AUTOMATIC DRAUGHT EXCLUDER

MASTERLINE 8-Fu

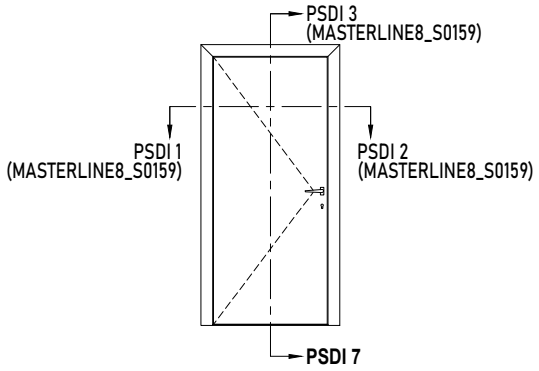

			#	Lm
408.0898.XX			1	B
			1	H
			1	H
408.1334.XX			2	B-127
			2	H-88

INT.

Pbi=B-97
Phi=H-58

EXT.

Pbe=B-149
Phe=H-84

BESLAG DEUREN > ZIE "HARDWARE CONFIGURATOR"
ACCESSOIRES PORTES > VOIRE "HARDWARE CONFIGURATOR"
DOORS GEAR > SEE "HARDWARE CONFIGURATOR"
TUERENBESCHLAG > SIEHE "HARDWARE CONFIGURATOR"

	#
168.7071.00	2
168.8072.00	2
168.7073.00	4
021.5830.00	4
169.8513.04	1
052.5316.--	4
169.8510.04	1
069.8426.04	2
052.5316.--	4
081.9236.04	4 x (60.5mm)
081.9092.04	1 x (60.5mm)
052.5310.--	1/300mm
080.9078.04	(2xB)+(4xH)
080.9631.07	(6xB)
	(8xH)
081.9040.--	PROD STEPS

Het verkleven van de panelen moet gebeuren volgens de voorschriften van de leverancier van de panelen. Reynaers geeft geen garantie op deze verkleving.
Le collage des panneaux doit se faire selon les instructions du fournisseur des panneaux. La garantie Reynaers ne s'applique pas à ce collage.
Glueing of the panels should be done according to the suppliers' instructions. The Reynaers guarantee does not cover this glueing.
Die Verklebung der Füllungen soll gemäß den Richtlinien des Lieferantens gemacht werden. Die Reynaers Garantie gilt aber nicht für diese Verklebung.

PSDI 7

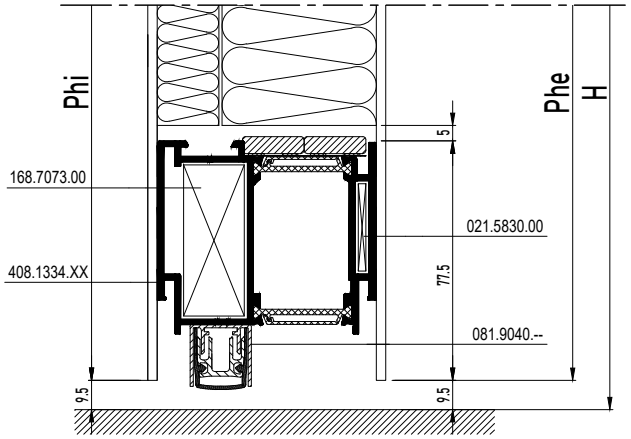

SECTIONS MASTERLINE 8-Fu Panel Door

Z-T PANEL DOOR OUTWARD OPENING WITH THRESHOLD

MASTERLINE 8-Fu

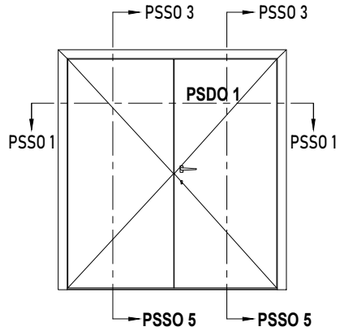

INT. B1	b1 = B1 - 203.5	h = H - 223
INT. B2	b2 = B2 - 203.5	h = H - 223
EXT. B1	Pb1 = B1 - 64.5	Ph = H - 58
EXT. B2	Pb2 = B2 - 38.5	Ph = H - 58

		#	Lm
408.0869.XX		1	B
		1	H
		1	H
408.1314.XX		2	B1 - 68.5
		2	B2 - 68.5
		3	H - 88.5
408.1316.XX		1	H - 58
030.3615.XX		2	B1 - 193.5
		2	B2 - 193.5
		4	H - 262.5
108.1874.XX		1	B - 143
108.0081.XX		1	B1 - 74.5
		1	B2 - 56.5

		#
168.7071.00		2
168.8072.00		2
168.7073.00		6
021.5830.00		8
168.7088.00		2
069.8360.04		1
052.5313.--		4
052.5316.--		4
069.8426.04		4
069.8427.04		4
052.5316.--		8
069.8511.04		1
069.8512.04		1
169.8522.04		2
080.9078.04		(1xB)+(3xH)
080.9094.04		(2xB)+(3xH)
080.9240.04		(1xB)
080.9320.04		(1xB)
080.9124.SY		(2xb1)+(2xb2)
		+(4xh)
080.9631.07		(4xb1)+(4xb2)
		+(8xh)
052.5327.--		1/300mm

BESLAG DEUREN > ZIE HARDWARE CONFIGURATOR
ACCESSOIRES PORTES > VOIR HARDWARE CONFIGURATOR
DOORS GEAR > SEE HARDWARE CONFIGURATOR
TUERENBESCHLAG > SIEHE HARDWARE CONFIGURATOR

Het verkleven van de panelen moet gebeuren volgens de voorschriften van de leverancier van de panelen. Reynaers geeft geen garantie op deze verkleving.
Le collage des panneaux doit se faire selon les instructions du fournisseur des panneaux. La garantie Reynaers ne s'applique pas à ce collage.
Glueing of the panels should be done according to the suppliers' instructions. The Reynaers guarantee does not cover this glueing.
Die Verklebung der Füllungen soll gemäß den Richtlinien des Lieferantens gemacht werden. Die Reynaers Garantie gilt aber nicht für diese Verklebung.

PSDO 1

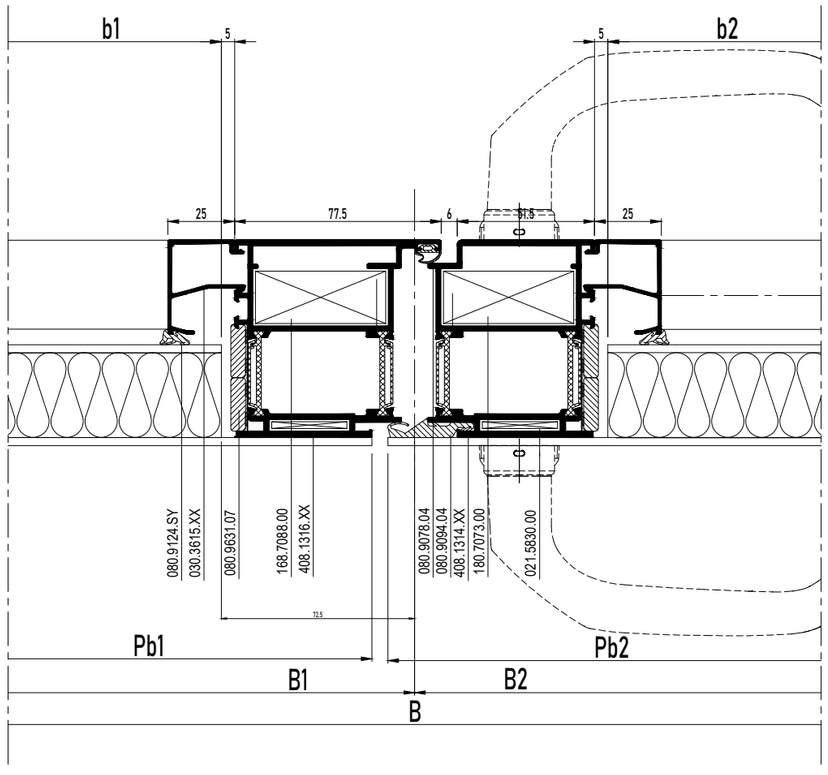

PSSO 5

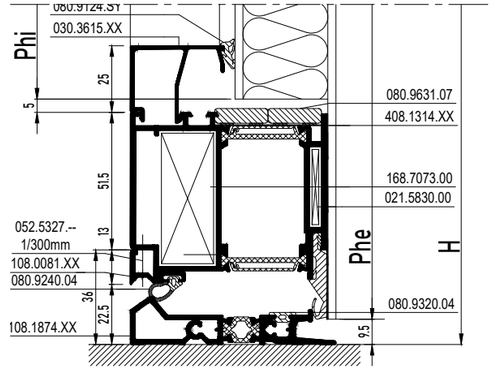

SECTIONS MASTERLINE 8-Fu Panel Door

Z-T PANEL DOOR DOUBLE SIDED INWARD OPENING WITH AUTOMATIC DRAUGHT EXCLUDER

MASTERLINE 8-Fu

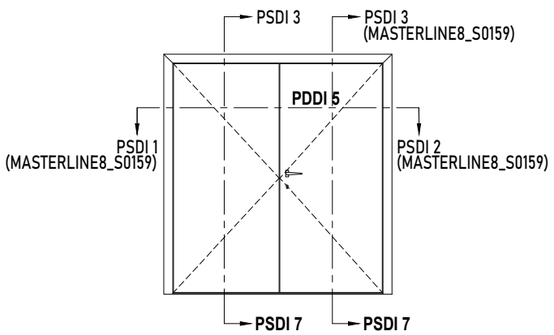

INT. B1	Pbi1=B1-64.5
	Phi=H-58
INT. B2	Pbi2=B2-38.5
	Phi=H-58
EXT. B1	Pbe1=B1-64.5
	Phe=H-110.5
EXT. B2	Pbe2=B2-90.5
	Phe=H-84

	#	Lm
408.0898.XX	1	B
	1	H
	1	H
408.1334.XX	2	B1 - 68.5
	2	B2 - 68.5
	4	H - 88.2

	#
168.7071.00	2
168.8072.00	2
168.7073.00	6
168.7088.00	2
021.5830.00	8
169.8513.04	1
052.5316.--	4
169.8510.04	2
069.8426.04	4
052.5316.--	8
081.9236.04	6 x (60.5mm)
169.8522.04	2
080.9094.04	B1 + B2
	+(4xH)
080.9631.07	(4xB1)+(4xB2)
	(8xH)
081.9040.--	PROD STEPS
052.5310.--	1/300mm

PDDI 5

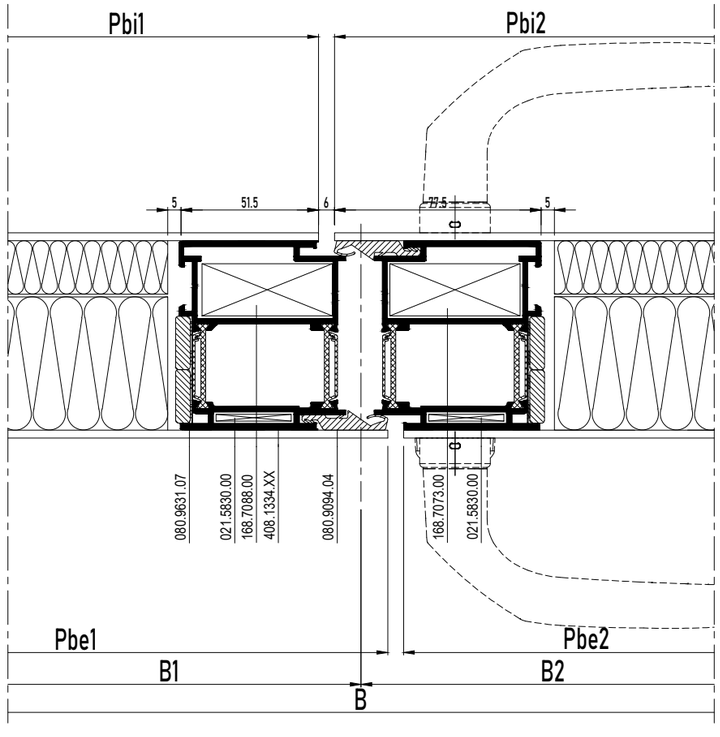

BESLAG DEUREN > ZIE "HARDWARE CONFIGURATOR"
ACCESSOIRES PORTES > VOIRE "HARDWARE CONFIGURATOR"
DOORS GEAR > SEE "HARDWARE CONFIGURATOR"
TUERENBESCHLAG > SIEHE "HARDWARE CONFIGURATOR"

Het verkleven van de panelen moet gebeuren volgens de voorschriften van de leverancier van de panelen. Reynaers geeft geen garantie op deze verkleving.
Le collage des panneaux doit se faire selon les instructions du fournisseur des panneaux. La garantie Reynaers ne s'applique pas à ce collage.
Glueing of the panels should be done according to the suppliers' instructions. The Reynaers guarantee does not cover this glueing.
Die Verklebung der Füllungen soll gemäß den Richtlinien des Lieferantens gemacht werden. Die Reynaers Garantie gilt aber nicht für diese Verklebung.

PSDI 7

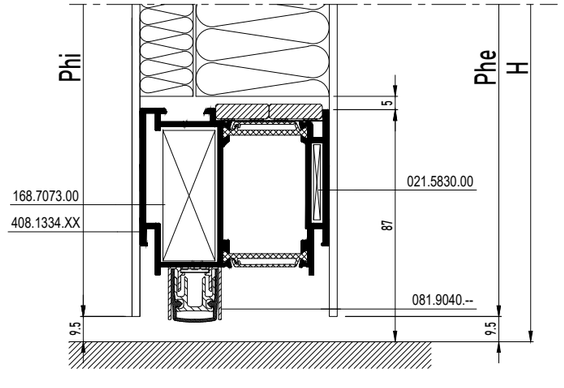

SECTIONS MASTERLINE 8-Fu Panel Door

PANEL DOOR OUTWARD OPENING WITH DOOR LATCH

MASTERLINE 8-Fu

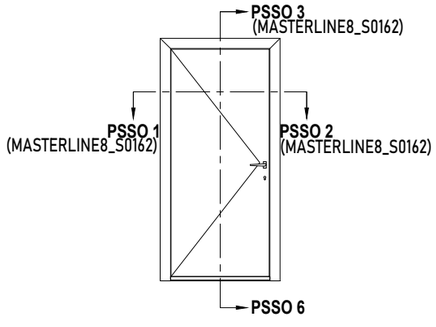

			#	Lm
408.0869.XX			1	B
			1	H
			1	H
408.1314.XX			2	B - 97
			2	H - 58.5
030.3615.XX			2	B - 252
			2	H - 263.5
108.0082.XX			1	B - 139

INT.	Pbi = B - 262
	Phi = H - 223.5
EXT.	Pbe = B - 97
	Phe = H - 58.5

		#
168.7071.00		2
168.8072.00		2
168.7073.00		4
021.5830.00		4
169.8513.04		1
052.5316.--		4
169.8510.04		1
069.8426.04		2
052.5316.--		4
081.9236.04		4 x (60.5mm)
081.9092.04		1 x (60.5mm)
080.9078.04		(1xB)+(2xH)
080.9124.SY		(2xb)+(2xh)
081.9040.--		PROD STEPS
180.9630.07		(4xb)+(4xh)
052.5315.--		1/300mm

BESLAG DEUREN > ZIE HARDWARE CONFIGURATOR
ACCESSOIRES PORTES > VOIR HARDWARE CONFIGURATOR
DOORS GEAR > SEE HARDWARE CONFIGURATOR
TUERENBESCHLAG > SIEHE HARDWARE CONFIGURATOR

Het verkleven van de panelen moet gebeuren volgens de voorschriften van de leverancier van de panelen. Reynaers geeft geen garantie op deze verkleving.
Le collage des panneaux doit se faire selon les instructions du fournisseur des panneaux. La garantie Reynaers ne s'applique pas à ce collage.
Glueing of the panels should be done according to the suppliers' instructions. The Reynaers guarantee does not cover this glueing.
Die Verklebung der Füllungen soll gemäß den Richtlinien des Lieferantens gemacht werden. Die Reynaers Garantie gilt aber nicht für diese Verklebung.

PSSO 6

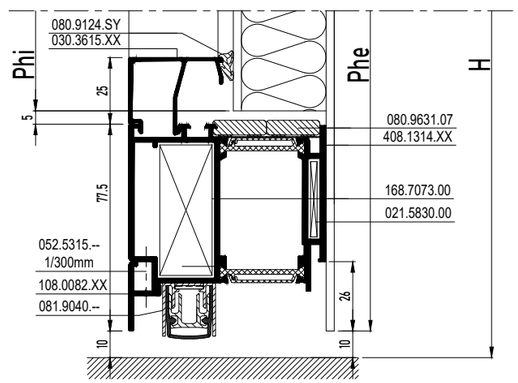

SECTIONS MASTERLINE 8-Fu Panel Door

PANEL DOOR DOUBLE SIDED INWARD OPENING WITH BRUSH

MASTERLINE 8-Fu

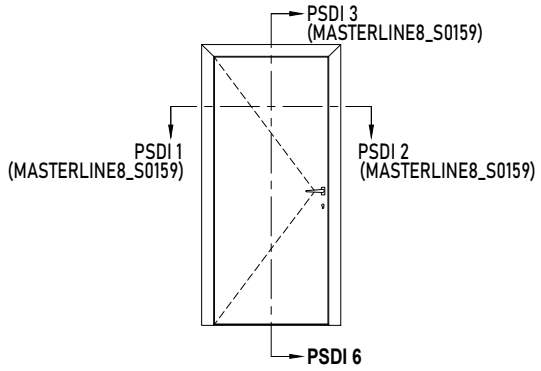

			#	Lm
408.0898.XX			1	B
			1	H
			1	H
408.1334.XX			2	B-127
			2	H-88
108.0080.XX			1	B - 139

INT.	Phi=B-97
	Phi=H-58
EXT.	Phe=B-149
	Phe=H-84

		#
168.7071.00		2
168.8072.00		2
168.7073.00		4
021.5830.00		4
169.8513.04		1
052.5316.--		4
069.8426.04		2
052.5316.--		4
081.9236.04		4 x (60.5mm)
081.9092.04		2 x (60.5mm)
081.9141.04		PROD STEPS
052.5310.--		1/300mm
069.8373.04		1
080.9078.04		(2xB)+(4xH)
080.9631.07		(6xB)
		(8xH)

BESLAG DEUREN > ZIE "HARDWARE CONFIGURATOR"
ACCESSOIRES PORTES > VOIRE "HARDWARE CONFIGURATOR"
DOORS GEAR > SEE "HARDWARE CONFIGURATOR"
TUERENBESCHLAG > SIEHE "HARDWARE CONFIGURATOR"

Het verkleven van de panelen moet gebeuren volgens de voorschriften van de leverancier van de panelen. Reynaers geeft geen garantie op deze verkleving.
Le collage des panneaux doit se faire selon les instructions du fournisseur des panneaux. La garantie Reynaers ne s'applique pas à ce collage.
Glueing of the panels should be done according to the suppliers' instructions. The Reynaers guarantee does not cover this glueing.
Die Verklebung der Füllungen soll gemäß den Richtlinien des Lieferantens gemacht werden. Die Reynaers Garantie gilt aber nicht für diese Verklebung.

PSDI 6

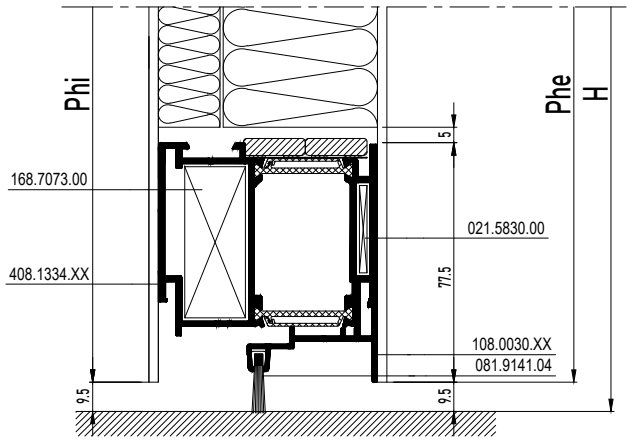

SECTIONS MASTERLINE 8-Fu Panel Door

Z-T PANEL DOOR OUTWARD OPENING WITH AUTOMATIC DRAUGHT EXCLUDER

MASTERLINE 8-Fu

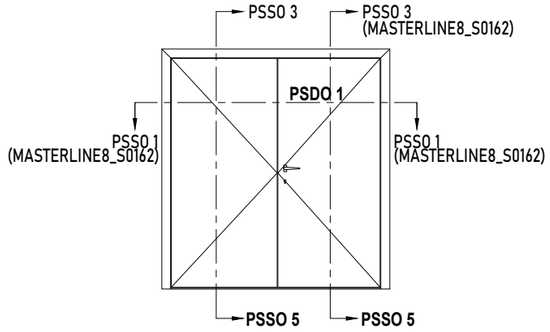

INT. B1	b1 = B1 - 203.5 h = H - 223
INT. B2	b2 = B2 - 203.5 h = H - 223
EXT. B1	Pb1 = B1 - 64.5 Ph = H - 58
EXT. B2	Pb2 = B2 - 38.5 Ph = H - 58

			#	Lm
408.0869.XX			1	B
			1	H
			1	H
408.1314.XX			2	B1 - 68.5
			2	B2 - 68.5
			3	H - 88.5
408.1316.XX			1	H - 58
030.3615.XX			2	B1 - 193.5
			2	B2 - 193.5
			4	H - 262.5
108.0082.XX			1	B1 - 59.5
			1	B2 - 80.5

		#
168.7071.00		2
168.8072.00		2
168.7073.00		6
021.5830.00		8
168.7088.00		2
169.8513.04		1
052.5316.--		4
169.8510.04		2
069.8426.04		4
052.5316.--		8
081.9236.04		6 x (60.5mm)
069.8511.04		1
069.8512.04		1
169.8522.04		2
080.9078.04		(1xB)+(3xH)
080.9094.04		B + (3xH)
080.9124.SY		(2xb1)+(2xb2)
		+(4xh)
080.9631.07		(4xb1)+(4xb2)
		+(8xh)
052.5327.--		1/300mm

PSDO 1

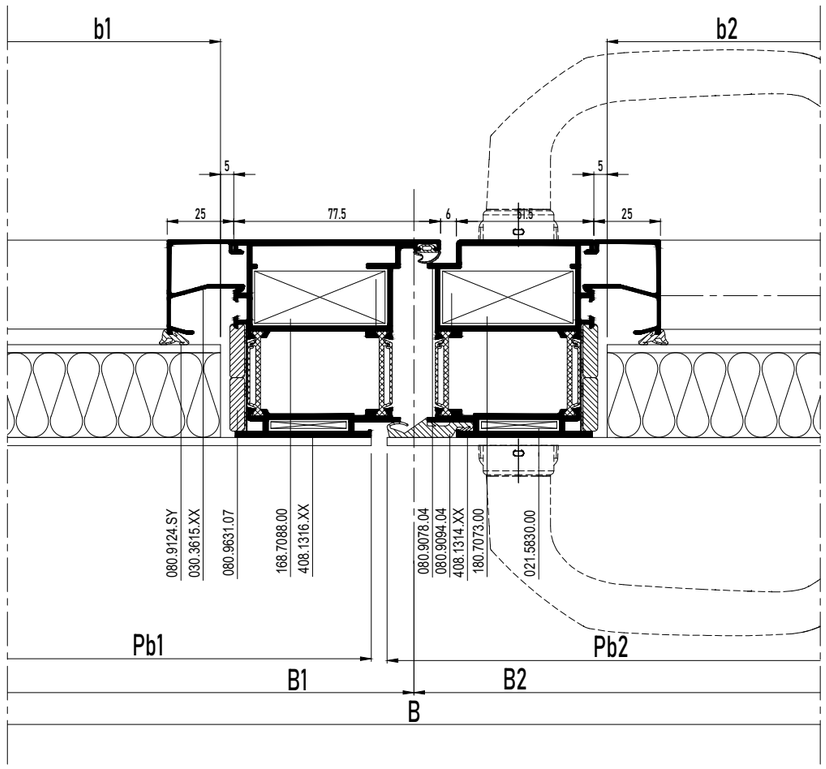

BESLAG DEUREN > ZIE HARDWARE CONFIGURATOR
ACCESSOIRES PORTES > VOIR HARDWARE CONFIGURATOR
DOORS GEAR > SEE HARDWARE CONFIGURATOR
TUERENBESCHLAG > SIEHE HARDWARE CONFIGURATOR

Het verkleven van de panelen moet gebeuren volgens de voorschriften van de leverancier van de panelen. Reynaers geeft geen garantie op deze verkleving.
Le collage des panneaux doit se faire selon les instructions du fournisseur des panneaux. La garantie Reynaers ne s'applique pas à ce collage.
Glueing of the panels should be done according to the suppliers' instructions. The Reynaers guarantee does not cover this glueing.
Die Verklebung der Füllungen soll gemäß den Richtlinien des Lieferantens gemacht werden. Die Reynaers Garantie gilt aber nicht für diese Verklebung.

PSSO 5

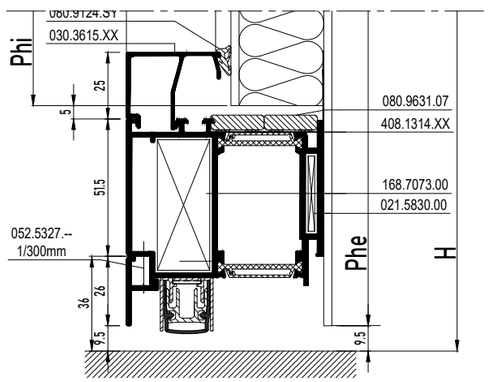

SECTIONS MASTERLINE 8-Fu Panel Door

Z-T PANEL DOOR DOUBLE SIDED INWARD OPENING WITH BRUSH

MASTERLINE 8-Fu

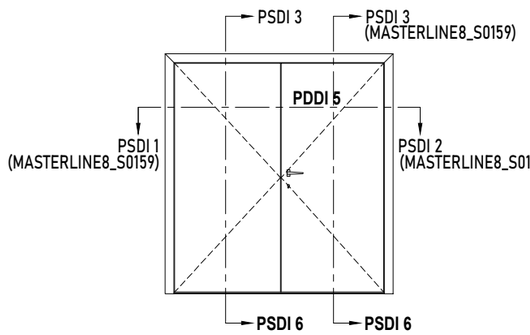

INT. B1	Pbi1 = B1-64.5
	Phi = H-58.5
INT. B2	Pbi2 = B2-38.5
	Phi = H-58.5
EXT. B1	Pbe1 = B1-64.5
	Phe = H-84.5
EXT. B2	Pbe2 = B2-90.5
	Phe = H-84.5

	Lm	#
408.0898.XX	B	1
	H	1
	H	1
408.1334.XX	B1 - 68.5	2
	B2 - 68.5	2
	H - 88.2	4
108.0030.XX	B1-59.5 ?	1
	B2-85.5 ?	1

	#
168.7071.00	2
168.8072.00	2
168.7073.00	6
168.7088.00	2
021.5830.00	8
169.8513.04	1
052.5316.--	4
069.8426.04	4
052.5316.--	8
081.9236.04	6 x (60.5mm)
081.9092.04	2 x (60.5mm)
081.9141.04	PROD STEPS
169.8522.04	2
080.9094.04	B1 + B2
	+(4xH)
080.9631.07	(4xB1)+(4xB2)
	(8xH)
052.5310.--	1/300mm

PDDI 5

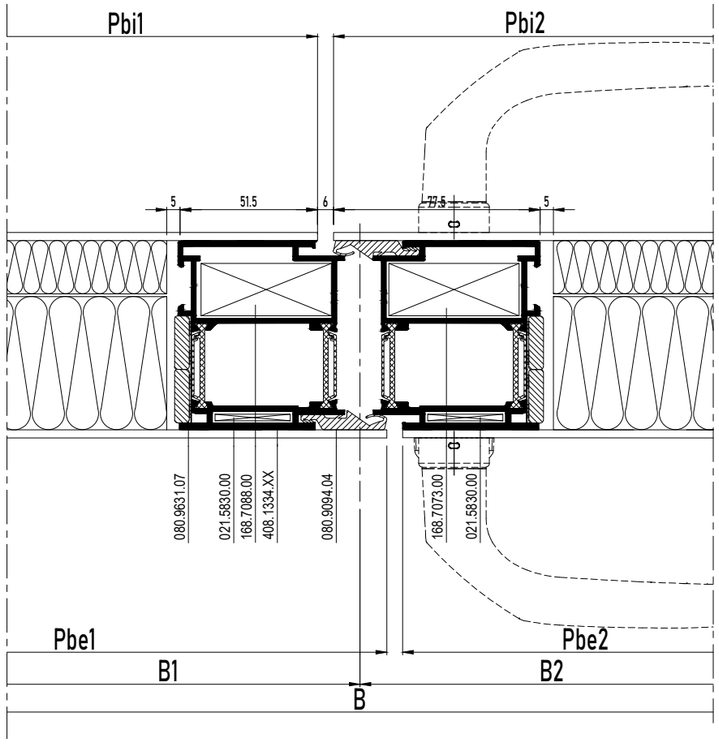

BESLAG DEUREN > ZIE "HARDWARE CONFIGURATOR"
ACCESSOIRES PORTES > VOIRE "HARDWARE CONFIGURATOR"
DOORS GEAR > SEE "HARDWARE CONFIGURATOR"
TUERENBESCHLAG > SIEHE "HARDWARE CONFIGURATOR"

Het verkleven van de panelen moet gebeuren volgens de voorschriften van de leverancier van de panelen. Reynaers geeft geen garantie op deze verkleving.
Le collage des panneaux doit se faire selon les instructions du fournisseur des panneaux. La garantie Reynaers ne s'applique pas à ce collage.
Glueing of the panels should be done according to the suppliers' instructions. The Reynaers guarantee does not cover this glueing.
Die Verklebung der Füllungen soll gemäß den Richtlinien des Lieferantens gemacht werden. Die Reynaers Garantie gilt aber nicht für diese Verklebung.

PSDI 6

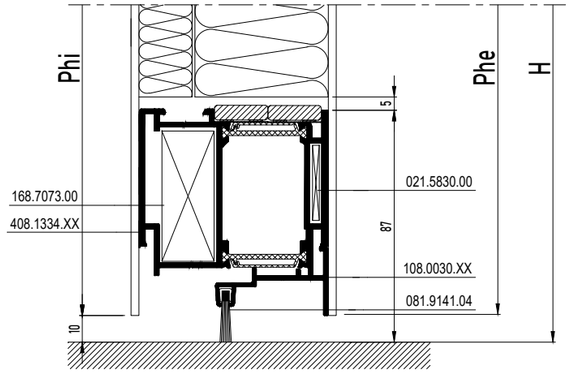

SECTIONS MASTERLINE 8-Fu Panel Door

PANEL DOOR OUTWARD OPENING WITH BRUSH

MASTERLINE 8-Fu

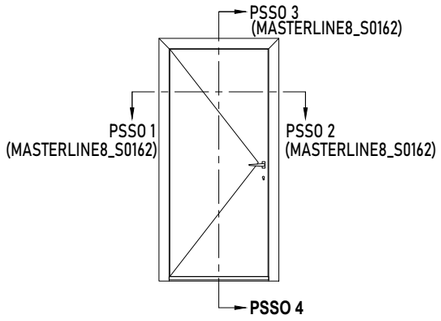

			#	Lm
408.0869.XX			1	B
			1	H
			1	H
408.1314.XX			2	B - 97
			2	H - 58.5
030.3615.XX			2	B - 252
			2	H - 263.5
108.0030.XX			1	B - 139

INT.	Pbi = B - 262
	Phi = H - 223.5
EXT.	Pbe = B - 97
	Phe = H - 58.5

	#
168.7071.00	2
168.8072.00	2
168.7073.00	4
021.5830.00	4
169.8513.04	1
052.5316.--	2
069.8426.04	2
052.5316.--	4
081.9236.04	4 x (60.5mm)
081.9092.04	2 x (60.5mm)
081.9141.04	19H.F. ...
080.9078.04	(1xB)+(2xH)
080.9124.SY	(2xb)+(2xh)
080.9631.07	(4xb)+(4xh)
080.9094.04	B + (2xH)
052.5310.--	1/300mm

PSSO 4

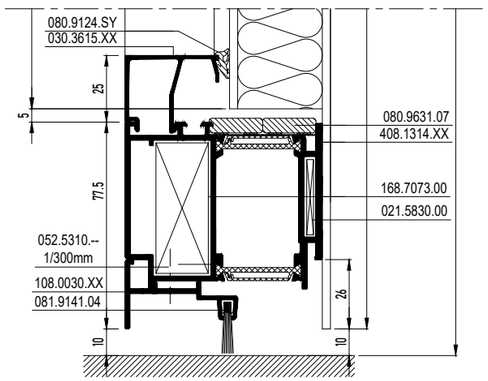

BESLAG DEUREN > ZIE HARDWARE CONFIGURATOR
ACCESSOIRES PORTES > VOIR HARDWARE CONFIGURATOR
DOORS GEAR > SEE HARDWARE CONFIGURATOR
TUERENBESCHLAG > SIEHE HARDWARE CONFIGURATOR

Het verkleven van de panelen moet gebeuren volgens de voorschriften van de leverancier van de panelen. Reynaers geeft geen garantie op deze verkleving.
Le collage des panneaux doit se faire selon les instructions du fournisseur des panneaux. La garantie Reynaers ne s'applique pas à ce collage.
Glueing of the panels should be done according to the suppliers' instructions. The Reynaers guarantee does not cover this glueing.
Die Verklebung der Füllungen soll gemäß den Richtlinien des Lieferantens gemacht werden. Die Reynaers Garantie gilt aber nicht für diese Verklebung.

SECTIONS MASTERLINE 8-Fu Panel Door

PANEL DOOR DOUBLE SIDED INWARD OPENING WITH SPY WINDOW

MASTERLINE 8-Fu

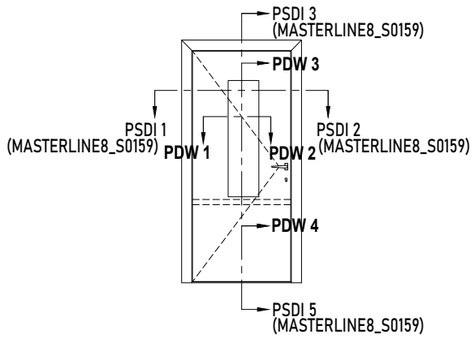

			#	Lm
108.0862.39			1	B - 252

		#
080.9631.07		(2xb) + (4xB)
		(4xH)
068.8714.00		2

b = Ob + 40
b = Oh + 40

X DICHTINGSMIDDEL
MATIERE D'ETANCHEITE
SEALING AGENT
ABDICHTUNG

BESLAG DEUREN > ZIE "HARDWARE CONFIGURATOR"
ACCESSOIRES PORTES > VOIRE "HARDWARE CONFIGURATOR"
DOORS GEAR > SEE "HARDWARE CONFIGURATOR"
TUERENBESCHLAG > SIEHE "HARDWARE CONFIGURATOR"

Het verkleven van de panelen moet gebeuren volgens de voorschriften van de leverancier van de panelen. Reynaers geeft geen garantie op deze verkleving.
Le collage des panneaux doit se faire selon les instructions du fournisseur des panneaux. La garantie Reynaers ne s'applique pas à ce collage.
Glueing of the panels should be done according to the suppliers' instructions. The Reynaers guarantee does not cover this glueing.
Die Verklebung der Füllungen soll gemäß den Richtlinien des Lieferantens gemacht werden. Die Reynaers Garantie gilt aber nicht für diese Verklebung.

PDW 1

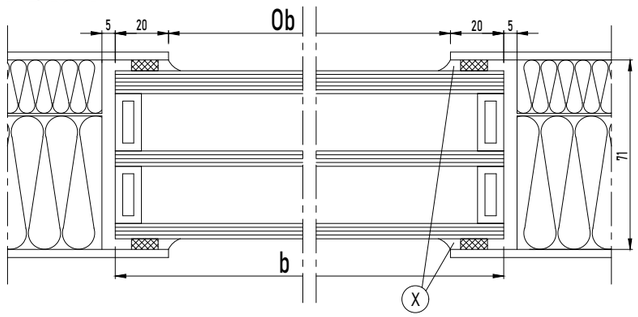

PDW 2

PDW 3

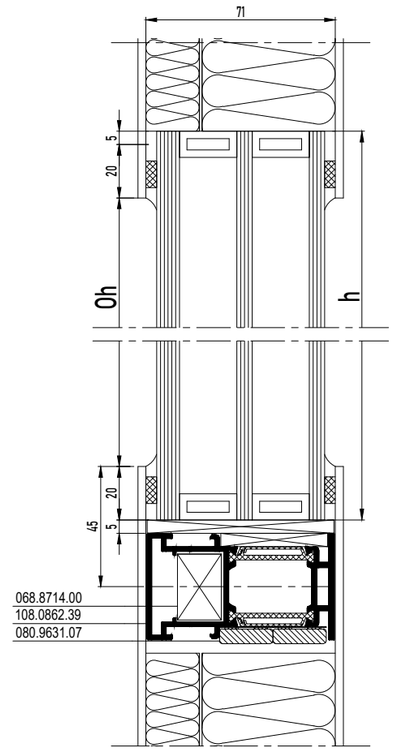

PDW 4

SECTIONS MASTERLINE 8-Fu Panel Door

Z-T PANEL DOOR OUTWARD OPENING WITH BRUSH

MASTERLINE 8-Fu

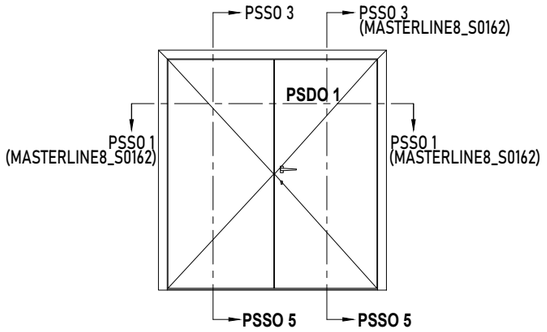

INT. B1	b1 = B1-203.5 h = H-223
INT. B2	b2 = B2-203.5 h = H-223
EXT. B1	Pb1 = B1-64.5 Ph = H-58.5
EXT. B2	Pb2 = B2-90.5 Ph = H-58.5

	#	Lm
408.0869.XX	1	B
	1	H
	1	H
408.1314.XX	2	B1 - 53.5
	2	B2 - 68.5
	3	H - 88.5
408.1316.XX	1	H - 58.5
030.3615.XX	2	B1 - 193.5
	2	B2 - 193.5
	4	H - 262.5
108.0030.XX	1	B1 - 77.5
	1	B2 - 80.5

	#
168.7071.00	2
168.8072.00	2
168.7073.00	6
021.5830.00	8
168.7088.00	2
169.8513.04	1
052.5316.--	4
069.8426.04	4
052.5316.--	8
081.9236.04	6 x (60.5mm)
081.9092.04	2 x (60.5mm)
081.9141.04	19.F....
069.8511.04	1
069.8512.04	1
169.8522.04	2
080.9078.04	(1xB)+(3xH)
080.9094.04	B + (3xH)
080.9124.SY	(2xb1)+(2xb2)
	+(4xh)
080.9631.07	(4xb1)+(4xb2)
	+(8xh)
052.5315.--	1/300mm

≥ 50mm
ZIE BEGLAZINGSMETHODE
VOIR METHODE DE VITRAGE
SEE GLAZING METHOD
SIEHE VERGLASUNGSWEISE

BESLAG DEUREN > ZIE HARDWARE CONFIGURATOR
ACCESSOIRES PORTES > VOIR HARDWARE CONFIGURATOR
DOORS GEAR > SEE HARDWARE CONFIGURATOR
TUERENBESCHLAG > SIEHE HARDWARE CONFIGURATOR

DDO 6

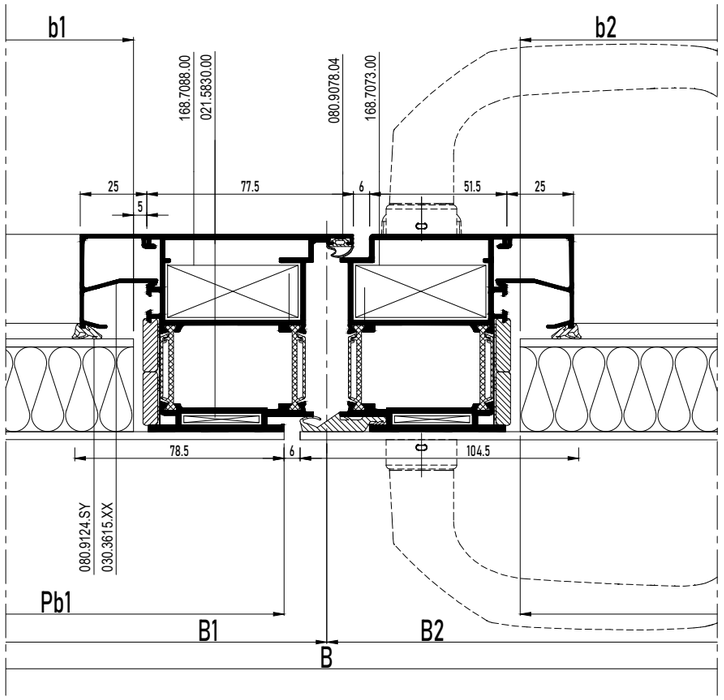

DSO 4

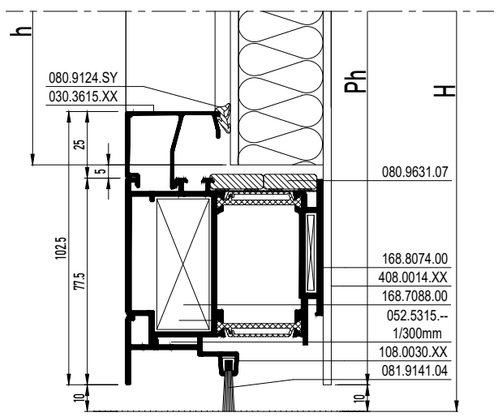

SECTIONS MASTERLINE 8-Fu Panel Door

PANEL DOOR DOUBLE SIDED INWARD OPENING WITH SPY WINDOW

MASTERLINE 8-Fu

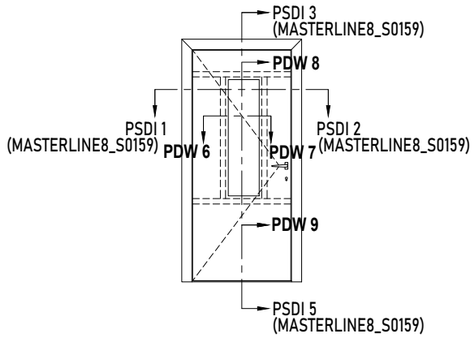

			#	Lm
108.0862.39			2	B - 252
			2	Oh + 50
030.3627.XX			2	Ob + 50
			2	Oh

		#
080.9631.07		(4xb)
		(4xh)
068.8714.00		8
080.9126.SY		(2xB)+(2xH)

b = Ob + 40
b = Oh + 40

X DICHTINGSMIDDEL
MATIERE D'ETANCHEITE
SEALING AGENT
ABDICHTUNG

BESLAG DEUREN > ZIE "HARDWARE CONFIGURATOR"
ACCESSOIRES PORTES > VOIRE "HARDWARE CONFIGURATOR"
DOORS GEAR > SEE "HARDWARE CONFIGURATOR"
TUERENBESCHLAG > SIEHE "HARDWARE CONFIGURATOR"

Het verkleven van de panelen moet gebeuren volgens de voorschriften van de leverancier van de panelen. Reynaers geeft geen garantie op deze verkleving.
Le collage des panneaux doit se faire selon les instructions du fournisseur des panneaux. La garantie Reynaers ne s'applique pas à ce collage.
Glueing of the panels should be done according to the suppliers' instructions. The Reynaers guarantee does not cover this glueing.
Die Verklebung der Füllungen soll gemäß den Richtlinien des Lieferantens gemacht werden. Die Reynaers Garantie gilt aber nicht für diese Verklebung.

PDW 6

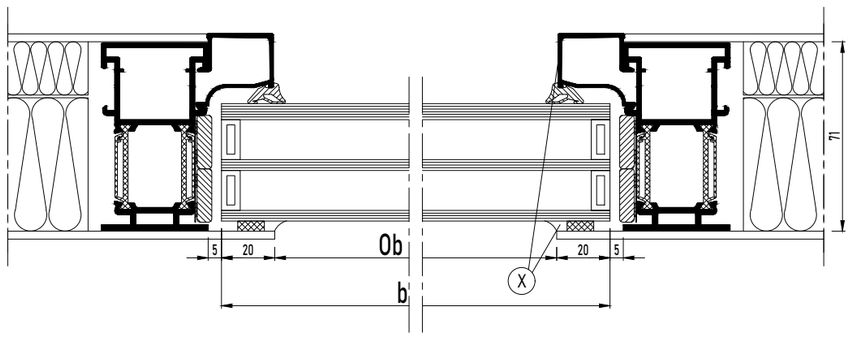

PDW 7

PDW 8

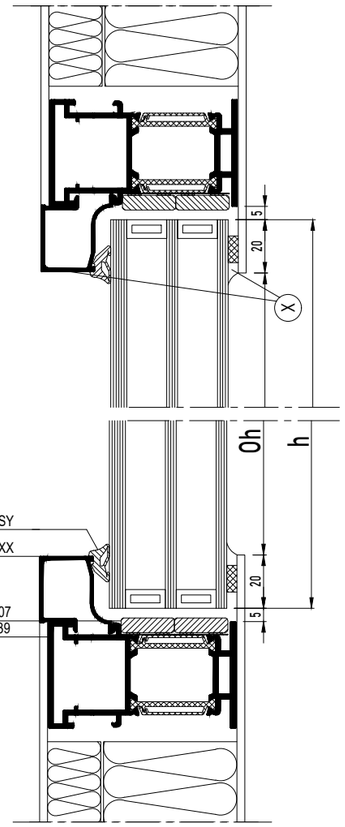

PDW 9

SECTIONS MASTERLINE 8-Fu Panel Door

PANEL DOOR DOUBLE SIDED OUTWARD OPENING WITH DOUBLE WEATHER STRIP

MASTERLINE 8-Fu

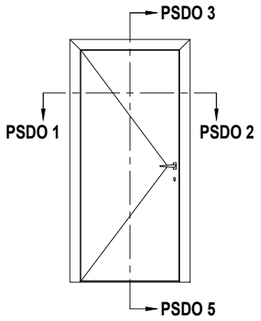

			#	Lm
408.0898.XX			1	B
			1	H
			1	H
408.1334.XX			2	B - 127
			2	H - 88
108.1874.XX			1	B - 143
108.0090.XX			1	B - 127

168.7071.00		2
168.8072.00		2
168.7073.00		4
021.5830.00		4
069.8360.04		1
052.5313.--		4
052.5316.--		4
069.8426.04		2
069.8427.04		2
052.5316.--		4
052.5310.--		1/300mm
080.9078.04		(1xB)+(2xH)
080.9320.04		B
080.9240.04		PROD STEPS
080.9094.04		(2xB)+(2xH)
080.9631.07		(6xB)
		(8xH)

INT.	Pbi = B - 149
	Phi = H - 98
EXT.	Pbe = B - 97
	Phe = H - 58

BESLAG DEUREN > ZIE HARDWARE CONFIGURATOR
ACCESSOIRES PORTES > VOIR HARDWARE CONFIGURATOR
DOORS GEAR > SEE HARDWARE CONFIGURATOR
TUERENBESCHLAG > SIEHE HARDWARE CONFIGURATOR

Het verkleven van de panelen moet gebeuren volgens de voorschriften van de leverancier van de panelen. Reynaers geeft geen garantie op deze verkleving.
Le collage des panneaux doit se faire selon les instructions du fournisseur des panneaux. La garantie Reynaers ne s'applique pas à ce collage.
Glueing of the panels should be done according to the suppliers' instructions. The Reynaers guarantee does not cover this glueing.
Die Verklebung der Füllungen soll gemäß den Richtlinien des Lieferantens gemacht werden. Die Reynaers Garantie gilt aber nicht für diese Verklebung.

PSDO 1

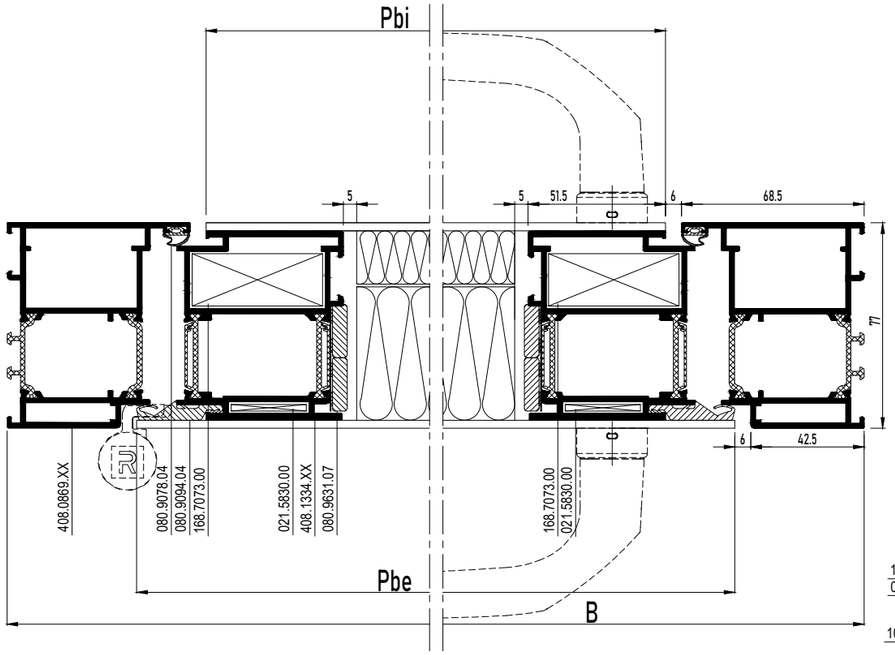

PSDO 2

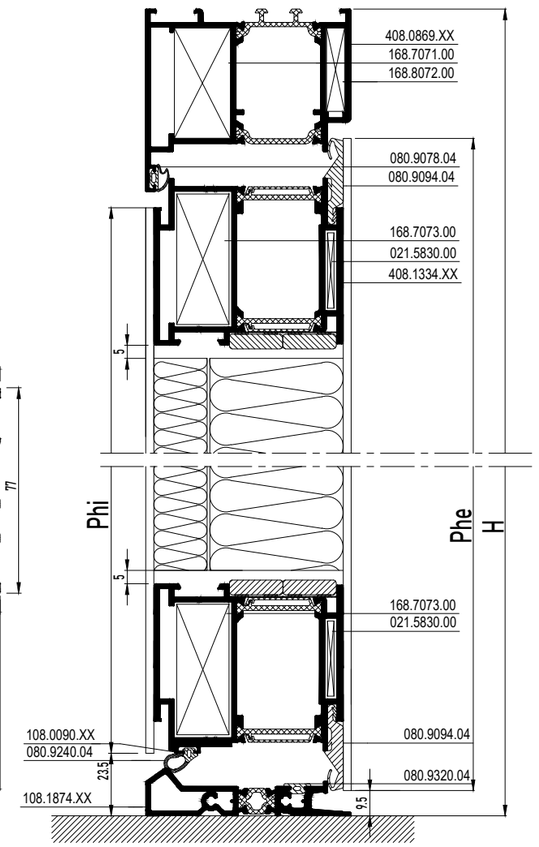

PSDO 3

PSDO 5

SECTIONS MASTERLINE 8-Fu Panel Door

PANEL DOOR DOUBLE SIDED INWARD OPENING PASSIVE

MASTERLINE 8-Fu

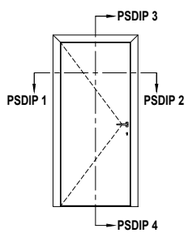

			#	
408.0498.XX			1	B
			1	H
			1	H
087.9870.07			1	B
			1	H
			1	H
408.1334.XX			2	B - 127
			2	H - 88
087.9882.07			2	B - 127
			2	H - 88
108.0080.XX			1	B - 133
108.1873.XX			1	B - 143

INT.	Pbi = B - 97
	Phi = H - 58
EXT.	Pbe = B - 149
	Phe = H - 110.5

		#
168.7071.00		2
168.8072.00		2
168.7073.00		4
021.5830.00		4
069.8360.04		1
052.5313.--		4
052.5316.--		4
069.8426.04		2
052.5316.--		4
052.5310.--		1/300mm
069.8427.04		2
069.8373.04		1
080.9095.04		(1xB)+(2xH)
080.9320.04		B
080.9240.04		PROD STEPS
080.9094.04		(2xB)+(2xH)
087.9940.04		(2xB)
		(2xH)
087.9941.04		B
		(2xH)
080.9631.07		(6xB)
		(8xH)
081.9229.07		4x(60.5mm)

BESLAG DEUREN > ZIE "HARDWARE CONFIGURATOR"
ACCESSOIRES PORTES > VOIRE "HARDWARE CONFIGURATOR"
DOORS GEAR > SEE "HARDWARE CONFIGURATOR"
TUERENBESCHLAG > SIEHE "HARDWARE CONFIGURATOR"

Het verkleven van de panelen moet gebeuren volgens de voorschriften van de leverancier van de panelen. Reynaers geeft geen garantie op deze verkleving.
Le collage des panneaux doit se faire selon les instructions du fournisseur des panneaux. La garantie Reynaers ne s'applique pas à ce collage.
Glueing of the panels should be done according to the suppliers' instructions. The Reynaers guarantee does not cover this glueing.
Die Verklebung der Füllungen soll gemäß den Richtlinien des Lieferantens gemacht werden. Die Reynaers Garantie gilt aber nicht für diese Verklebung.

PSDIP 1

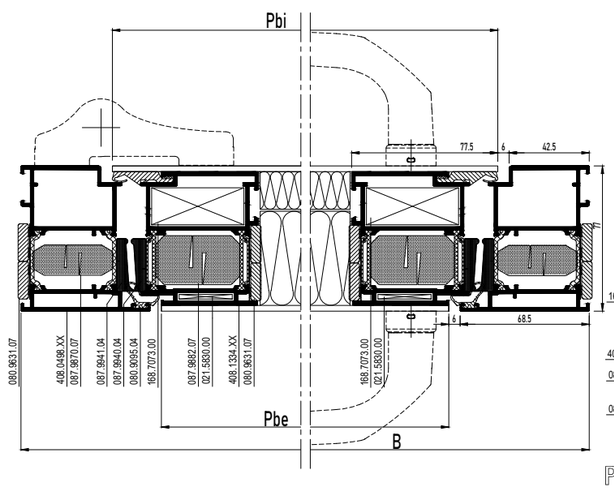

PSDIP 2

PSDIP 4

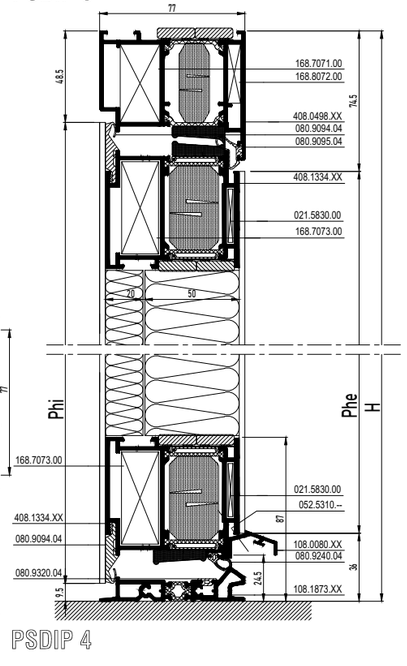

SECTIONS MASTERLINE 8-Fu Panel Door

PANEL DOOR DOUBLE SIDED OUTWARD OPENING WITH AUTOMATIC DRAUGHT EXCLUDER

MASTERLINE 8-Fu

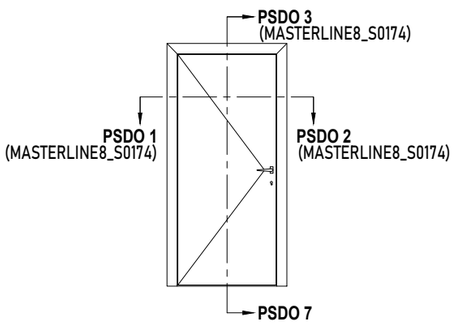

			#	Lm
408.0898.XX			1	B
			1	H
			1	H
408.1334.XX			2	B - 127
			2	H - 88

INT.	Pbi = B - 149
	Phi = H - 84
EXT.	Pbe = B - 97
	Phe = H - 58

168.7071.00		2
168.8072.00		2
168.7073.00		4
021.5830.00		4
169.8513.04		1
052.5316.--		4
169.8510.04		1
069.8426.04		2
052.5316.--		4
081.9236.04		4 x (60.5mm)
081.9092.04		1 x (60.5mm)
080.9078.04		(1xB)+(2xH)
080.9094.04		B + (2xH)
080.9631.07		(6xB)
		(8xH)
081.9040.--		PROD STEPS
052.5310.--		1/300mm

BESLAG DEUREN > ZIE HARDWARE CONFIGURATOR
ACCESSOIRES PORTES > VOIR HARDWARE CONFIGURATOR
DOORS GEAR > SEE HARDWARE CONFIGURATOR
TUERENBESCHLAG > SIEHE HARDWARE CONFIGURATOR

Het verkleven van de panelen moet gebeuren volgens de voorschriften van de leverancier van de panelen. Reynaers geeft geen garantie op deze verkleving.
Le collage des panneaux doit se faire selon les instructions du fournisseur des panneaux. La garantie Reynaers ne s'applique pas à ce collage.
Glueing of the panels should be done according to the suppliers' instructions. The Reynaers guarantee does not cover this glueing.
Die Verklebung der Füllungen soll gemäß den Richtlinien des Lieferantens gemacht werden. Die Reynaers Garantie gilt aber nicht für diese Verklebung.

PSDO 7

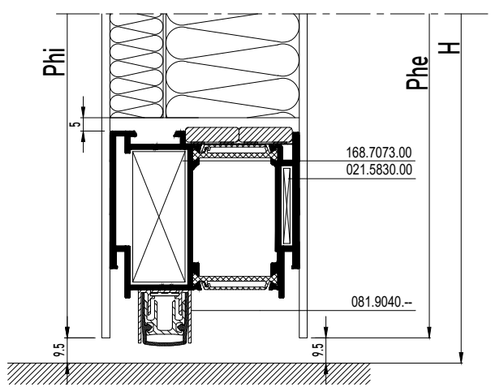

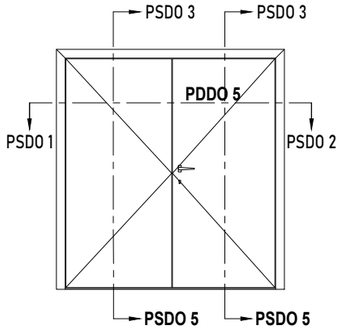

INT. B1	Pbi1 = B1 - 90.5
	Phi = H - 98
INT. B2	Pbi2 = B2 - 64.5
	Phi = H - 98
EXT. B1	Pbe1 = B1 - 38.5
	Phe = H - 58
EXT. B2	Pbe2 = B2 - 64.5
	Phe = H - 58

		#	Lm
408.0869.XX		1	B
		1	H
		1	H
408.1334.XX		2	B1 - 68.5
		2	B2 - 68.5
		4	H - 88
108.0090.XX		1	B1 - 74.5
		1	B2 - 74.5
108.1874.XX		1	B - 143

	#
168.7071.00	2
168.8072.00	2
168.7073.00	6
168.7088.00	2
021.5830.00	8
069.8360.04	1
052.5313.--	4
052.5316.--	4
069.8426.04	4
069.8427.04	4
052.5316.--	8
169.8522.04	2
080.9078.04	(1xB)+(2xH)
080.9094.04	(2xB1)+(2xB2)
	(4xH)
080.9240.04	(1xB)
080.9320.04	(1xB)
080.9631.07	(4xB1)+(4xB2)
	(8xH)
052.5310.--	1/300mm

BESLAG DEUREN > ZIE "OPENING DOORS"
ACCESSOIRES PORTES > VOIRE "OPENING DOORS"
DOORS GEAR > SEE "OPENING DOORS"
TUERENBESCHLAG > SIEHE "OPENING DOORS"

Het verkleven van de panelen moet gebeuren volgens de voorschriften van de leverancier van de panelen. Reynaers geeft geen garantie op deze verkleving.
Le collage des panneaux doit se faire selon les instructions du fournisseur des panneaux. La garantie Reynaers ne s'applique pas à ce collage.
Glueing of the panels should be done according to the suppliers' instructions. The Reynaers guarantee does not cover this glueing.
Die Verklebung der Füllungen soll gemäß den Richtlinien des Lieferantens gemacht werden. Die Reynaers Garantie gilt aber nicht für diese Verklebung.

PDDO 5

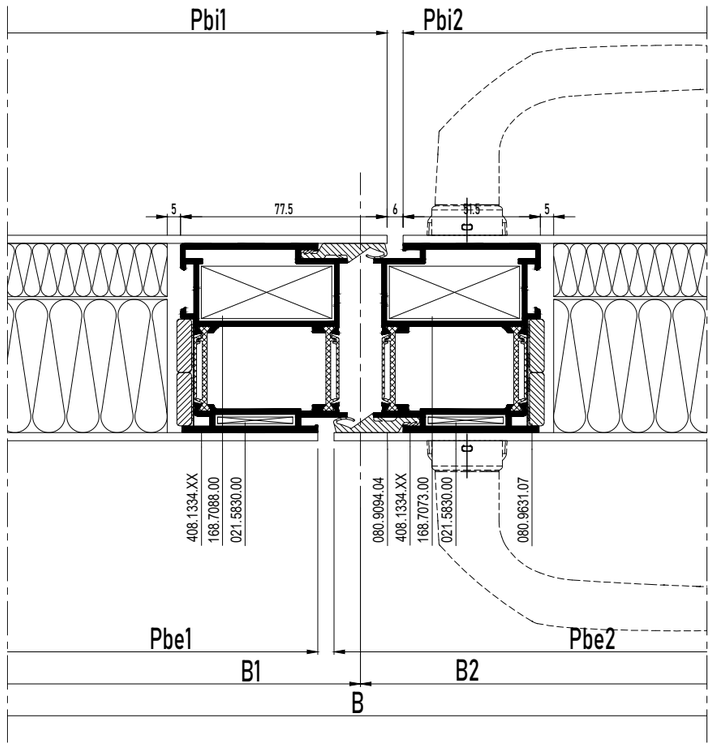

PSDO 5

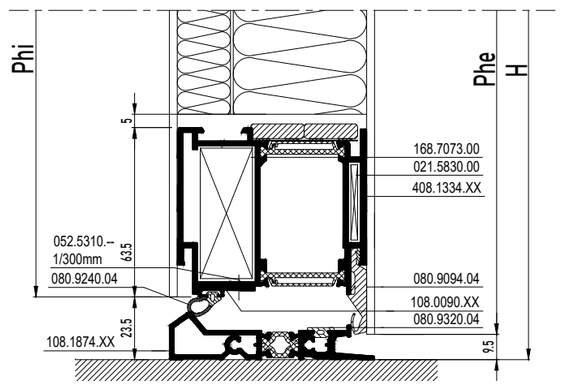

SECTIONS MASTERLINE 8-Fu Panel Door

Z-T PANEL DOOR DOUBLE SIDED OUTWARD OPENING WITH AUTOMATIC DRAUGHT EXCLUDER

MASTERLINE 8-Fu

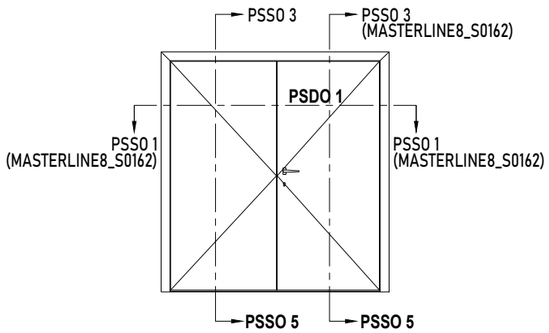

INT. B1	b1 = B1 - 209.5	h = H - 229
INT. B2	b2 = B2 - 209.5	h = H - 229
EXT. B1	Pb1 = B1 - 64.5	Ph = H - 58
EXT. B2	Pb2 = B2 - 38.5	Ph = H - 58

			#	Lm
408.0869.XX			1	B
			1	H
			1	H
408.1334.XX			2	B1 - 68.5
			2	B2 - 68.5
			4	H - 88

		#
168.7071.00		2
168.8072.00		2
168.7073.00		6
021.5830.00		8
168.7088.00		2
169.8513.04		1
052.5316.--		4
169.8510.04		2
069.8426.04		4
052.5316.--		8
081.9236.04		6 x (60.5mm)
080.9078.04		(1xB)+(3xH)
080.9094.04		B + (4xH)
080.9631.07		(4xb)+(4xh)

BESLAG DEUREN > ZIE HARDWARE CONFIGURATOR
ACCESSOIRES PORTES > VOIR HARDWARE CONFIGURATOR
DOORS GEAR > SEE HARDWARE CONFIGURATOR
TUERENBESCHLAG > SIEHE HARDWARE CONFIGURATOR

Het verkleven van de panelen moet gebeuren volgens de voorschriften van de leverancier van de panelen. Reynaers geeft geen garantie op deze verkleving.
Le collage des panneaux doit se faire selon les instructions du fournisseur des panneaux. La garantie Reynaers ne s'applique pas à ce collage.
Glueing of the panels should be done according to the suppliers' instructions. The Reynaers guarantee does not cover this glueing.
Die Verklebung der Füllungen soll gemäß den Richtlinien des Lieferantens gemacht werden. Die Reynaers Garantie gilt aber nicht für diese Verklebung.

PSDO 1

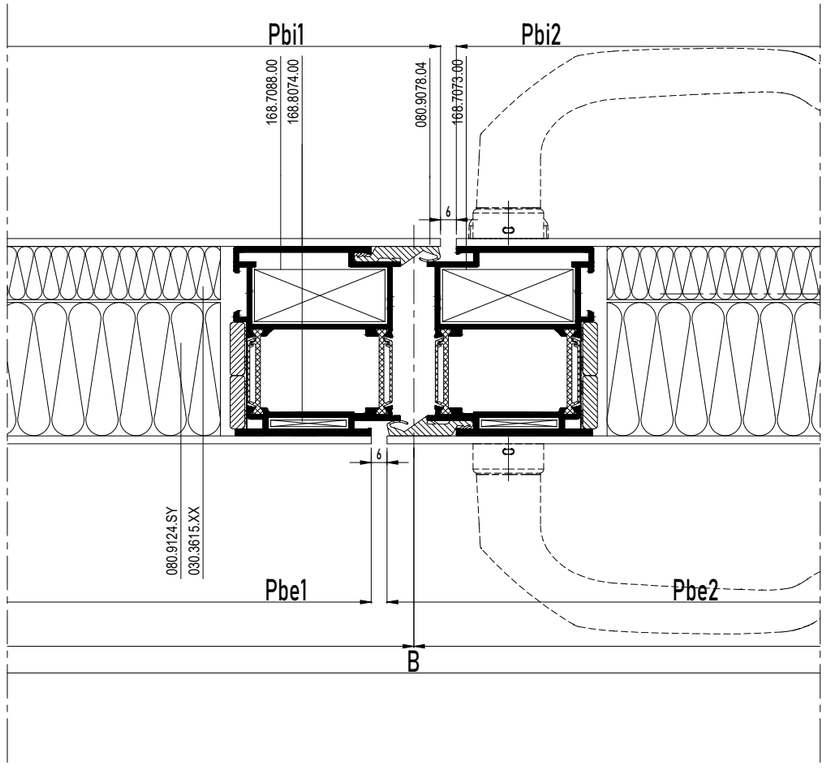

PSSO 5

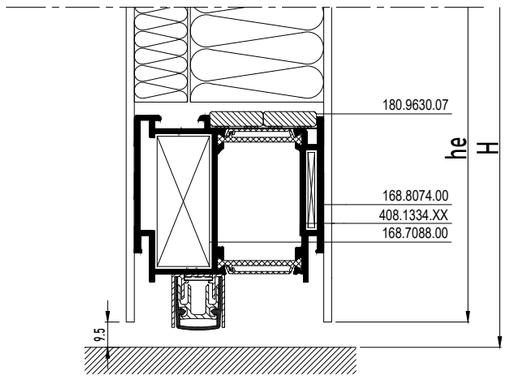

SECTIONS MASTERLINE 8-Fu Panel Door

PANEL DOOR DOUBLE SIDED OUTWARD OPENING WITH BRUSH

MASTERLINE 8-Fu

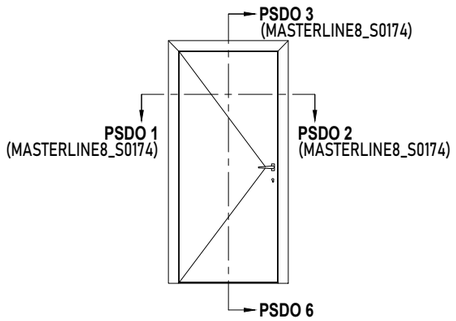

			#	Lm
408.0898.XX			1	B
			1	H
			1	H
408.1334.XX			2	B - 127
			2	H - 88
108.1874.XX			1	B - 143
108.0030.XX			1	B - 139

INT.	Pbi = B - 149
	Phi = H - 98
EXT.	Pbe = B - 97
	Phe = H - 58

		#
168.7071.00		2
168.8072.00		2
168.7073.00		4
021.5830.00		4
169.8513.04		1
052.5316.--		4
069.8426.04		2
052.5316.--		4
081.9236.04		4 x (60.5mm)
081.9092.04		2 x (60.5mm)
081.9141.04		PROD STEPS
080.9078.04		(1xB)+(2xH)
080.9094.04		B + (2xH)
080.9631.07		(6xB)
		(8xH)
052.5310.--		1/300mm

BESLAG DEUREN > ZIE HARDWARE CONFIGURATOR
ACCESSOIRES PORTES > VOIR HARDWARE CONFIGURATOR
DOORS GEAR > SEE HARDWARE CONFIGURATOR
TUERENBESCHLAG > SIEHE HARDWARE CONFIGURATOR

Het verkleven van de panelen moet gebeuren volgens de voorschriften van de leverancier van de panelen. Reynaers geeft geen garantie op deze verkleving.
Le collage des panneaux doit se faire selon les instructions du fournisseur des panneaux. La garantie Reynaers ne s'applique pas à ce collage.
Glueing of the panels should be done according to the suppliers' instructions. The Reynaers guarantee does not cover this glueing.
Die Verklebung der Füllungen soll gemäß den Richtlinien des Lieferantens gemacht werden. Die Reynaers Garantie gilt aber nicht für diese Verklebung.

PSDO 6

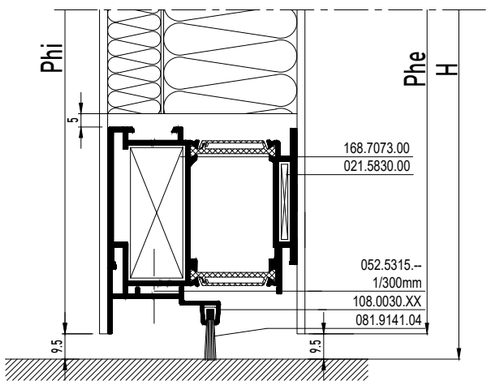

SECTIONS MASTERLINE 8-Fu Pivot Door

COMBINED PIVOT DOOR INWARD OPENING - FIXED LIGHT

MASTERLINE 8-Fu

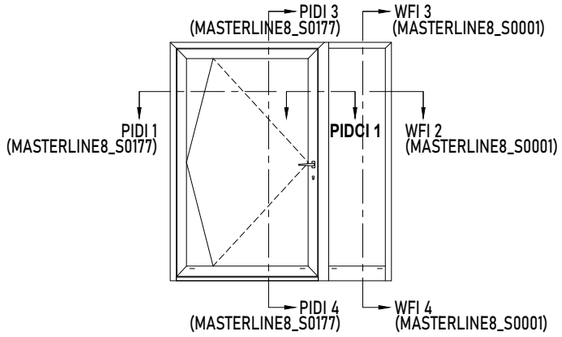

b1 = B1 - 313
h1 = H - 301.5

b2 = B2 - 94
h2 = H - 182

		#
168.7004.00		1
168.8004.00		1
160.8750.--		4
168.8712.00		4
168.8714.00		1
168.8742.00		6
169.8748.04		19H.F. ...
069.6831.XX		19H.F. ...
180.9630.07		2xb2 + 2xh2
080.9125.04		2xb2 + 2xh2
180.9114.SY		2xb2 + 2xh2

			#	Lm
408.0598.XX			1	B1 + 25
			1	H
408.0798.XX			1	H + 27
408.1860.XX			1	B1 - 160
0M0.4504.XX			1	B1 - 160
408.0014.XX			2	B1 - 142
			2	H - 130.5
408.1030.XX			1	H - 57.5
			1	H - 97.5
408.1032.XX [1]			1	19H.F. ...
			1	19H.F. ...
408.0082.XX			1	B1 - 189
408.0008.04			1	B1 - 175
030.3610.XX			2	B1 - 297
			2	H - 335.5

			#	Lm
408.0125.XX			1	B2 -25
			1	H
030.3610.XX			2	B2 - 78
			2	H - 216
408.1140.XX			1	B2 - 78

~ 50mm	ZIE BEGLAZINGSMETHODE VOIR METHODE DE VITRAGE SEE GLAZING METHOD SIEHE VERGLASUNGSWEISE

BESLAG DEUREN > ZIE "HARDWARE CONFIGURATOR"
ACCESSOIRES PORTES > VOIRE "HARDWARE CONFIGURATOR"
DOORS GEAR > SEE "HARDWARE CONFIGURATOR"
TUERENBESCHLAG > SIEHE "HARDWARE CONFIGURATOR"

		#
168.7073.00		6
168.8074.00		6
168.7002.00		2
160.8750.--		4
169.8748.04		PROD STEPS
169.7560.04 [2]		1
169.7460.04 [3]		1
052.5311.--		4
052.5314.--		2
169.7470.04		1
052.5311.--		4
081.9092.04		1 x 50mm
		2 x 60mm
		2 x 56mm
080.9078.04		3xB1 + 6xH
080.9091.04		2
080.9124.SY		2xb1 + 2xh1
180.9114.SY		2xb1 + 2xh1
180.9630.07		2xb1 + 2xh1
080.9805.04		1 x B1
080.9697.04		1 x B1
080.9381.04		1xB1 + 2xH
081.9059.-- [4]		B1 - 153
052.5310.--		B1/300mm
052.5318.--		1/300mm
069.6831.XX		PROD STEPS
062.8112.04		1
165.7560.--		1
165.7570.--		1
165.7574.00		1

[1] DIN L = 408.1031.XX
[2] DIN L = 169.7550.04
[3] DIN L = 169.7450.04
[4] Afhankelijk van de vleugelbreedte
En fonction de la largeur de l'ouvrant
Depending on vent width
Abhängig von der Flügelbreite

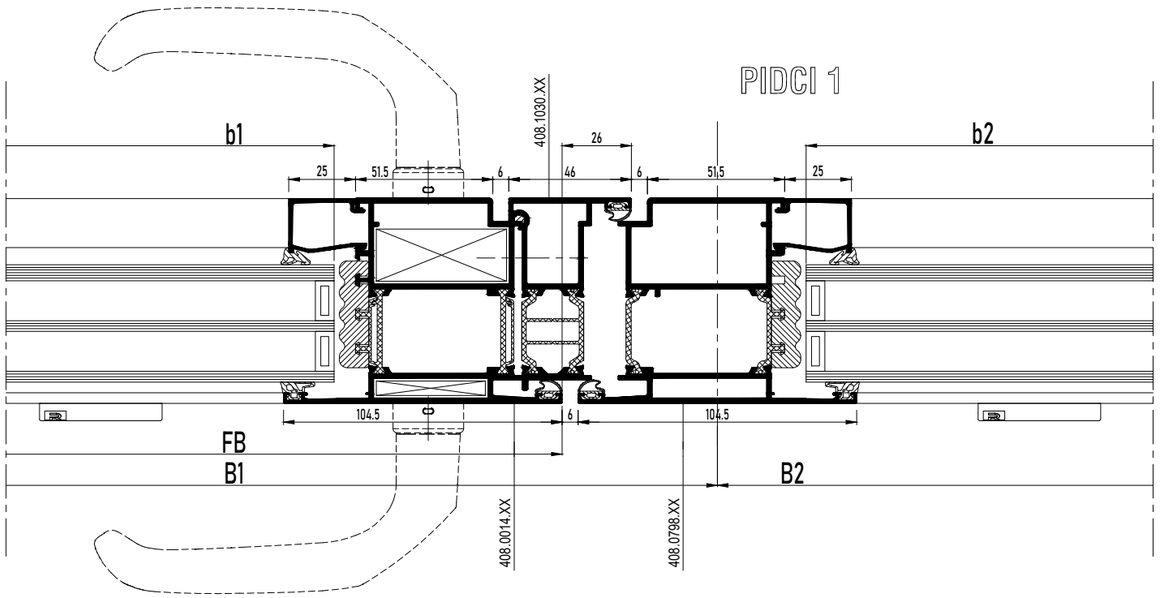

SECTIONS MASTERLINE 8-Fu Panel Door

Z-T PANEL DOOR DOUBLE SIDED OUTWARD OPENING WITH BRUSH

MASTERLINE 8-Fu

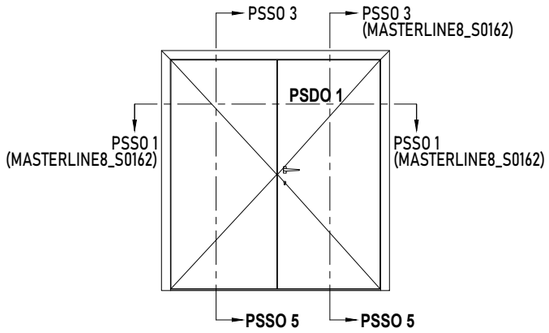

INT. B1	Pbi1=B1-64.5 Ph=H-84.5
INT. B2	Pbi2=B2-38.5 Ph=H-84.5
EXT. B1	Pbe1=B1-64 Ph = H - 58.5
EXT. B2	Pbe2=B2-38.5 Ph=H-58.5

			#	Lm
408.0869.XX			1	B
			1	H
			1	H
408.1334.XX			2	B1 - 68.5
			2	B2 - 68.5
			4	H - 88
108.0030.XX			1	B1 - 77.5
			1	B2 - 80.5

		#
168.7071.00		2
168.8072.00		2
168.7073.00		6
021.5830.00		8
168.7088.00		2
169.8513.04		1
052.5316.--		4
069.8426.04		4
052.5316.--		8
081.9236.04		6 x (60.5mm)
081.9092.04		2 x (60.5mm)
081.9141.04		19.F....
069.8511.04		1
069.8512.04		1
169.8522.04		2
080.9078.04		(1xB)+(2xH)
080.9094.04		B + (4xH)
080.9631.07		(8xb)+(8xh)
052.5315.--		1/300mm

≥ 50mm
ZIE BEGLAZINGSMETHODE
VOIR METHODE DE VITRAGE
SEE GLAZING METHOD
SIEHE VERGLASUNGSWEISE

BESLAG DEUREN > ZIE HARDWARE CONFIGURATOR
ACCESSOIRES PORTES > VOIR HARDWARE CONFIGURATOR
DOORS GEAR > SEE HARDWARE CONFIGURATOR
TUERENBESCHLAG > SIEHE HARDWARE CONFIGURATOR

DDO 6

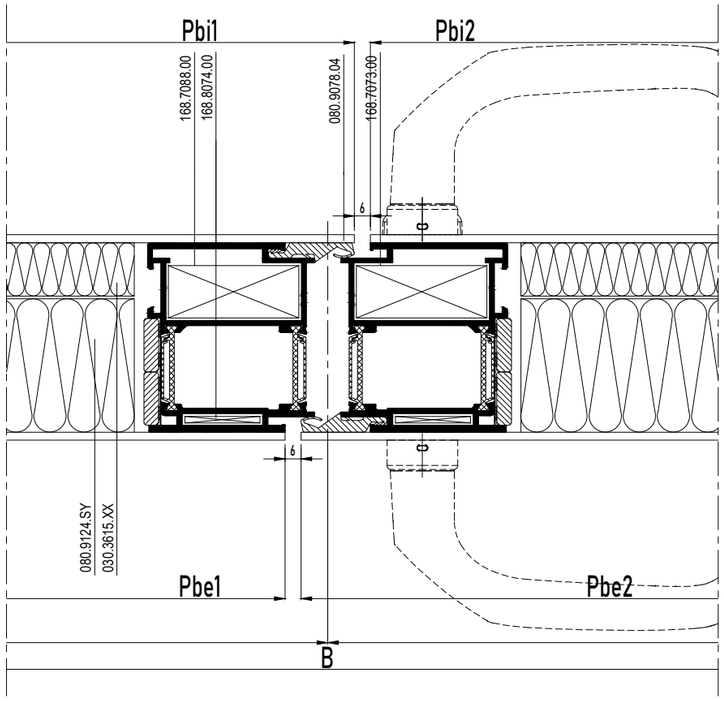

DSO 4

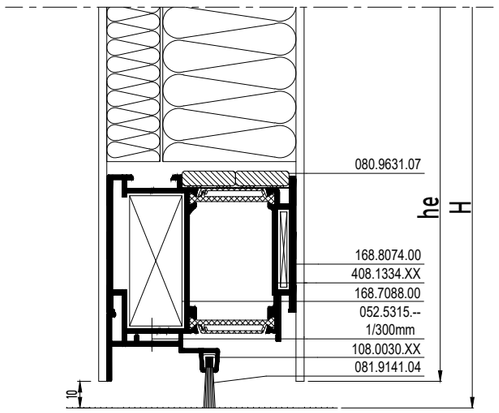

SECTIONS MASTERLINE 8-Fu Panel Door

PANEL DOOR DOUBLE SIDED OUTWARD OPENING PASSIVE

MASTERLINE 8-Fu

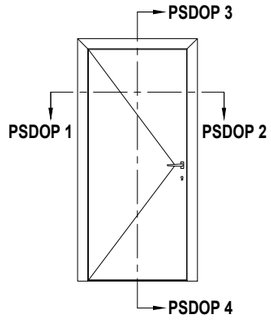

			#	Lm
408.0469.XX			1	B
			1	H
			1	H
087.9870.07			1	B
			1	H
			1	H
408.1334.XX			2	B - 127
			2	H - 88
087.9882.07			2	B - 127
			2	H - 88
108.1874.XX			1	B - 143
108.0090.XX			1	B - 127

		#
168.7071.00		2
168.8072.00		2
168.7073.00		4
021.5830.00		4
069.8360.04		1
052.5313.--		4
052.5316.--		4
069.8426.04		2
069.8427.04		2
052.5316.--		4
052.5310.--		1/300mm
080.9095.04		(1xB)+(2xH)
080.9320.04		B
080.9240.04		PROD STEPS
080.9094.04		(2xB)+(2xH)
087.9940.04		(2xB)
		(2xH)
087.9941.04		B
		(2xH)
080.9631.07		(6xB)
		(8xH)

Pbi = B - 149
Phi = H - 98

Pbe = B - 97
Phe = H - 58

BESLAG DEUREN > ZIE HARDWARE CONFIGURATOR
ACCESSOIRES PORTES > VOIR HARDWARE CONFIGURATOR
DOORS GEAR > SEE HARDWARE CONFIGURATOR
TUERENBESCHLAG > SIEHE HARDWARE CONFIGURATOR

Het verkleven van de panelen moet gebeuren volgens de voorschriften van de leverancier van de panelen. Reynaers geeft geen garantie op deze verkleving.
Le collage des panneaux doit se faire selon les instructions du fournisseur des panneaux. La garantie Reynaers ne s'applique pas à ce collage.
Glueing of the panels should be done according to the suppliers' instructions. The Reynaers guarantee does not cover this glueing.
Die Verklebung der Füllungen soll gemäß den Richtlinien des Lieferantens gemacht werden. Die Reynaers Garantie gilt aber nicht für diese Verklebung.

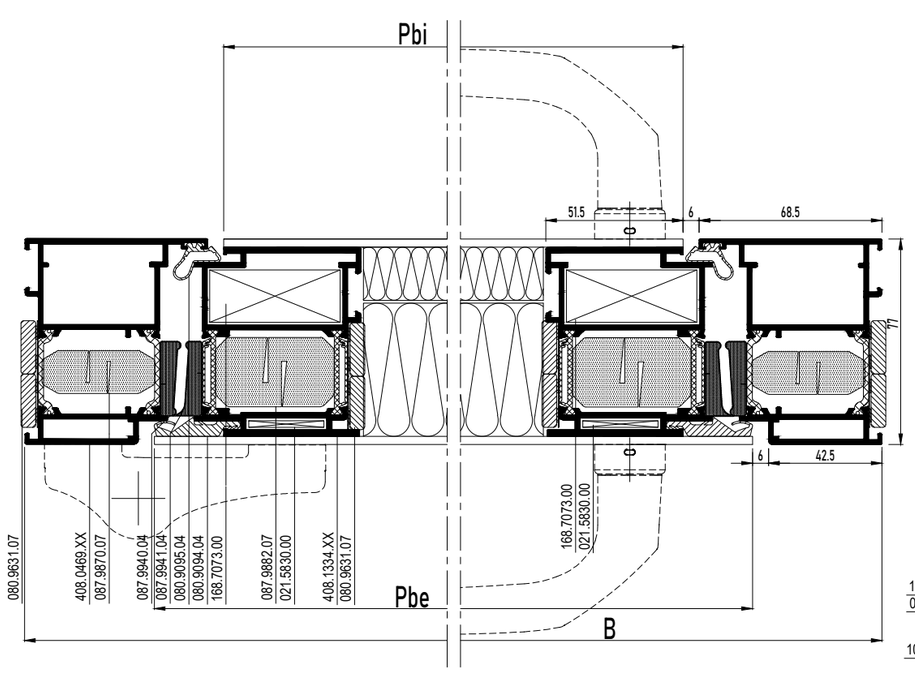

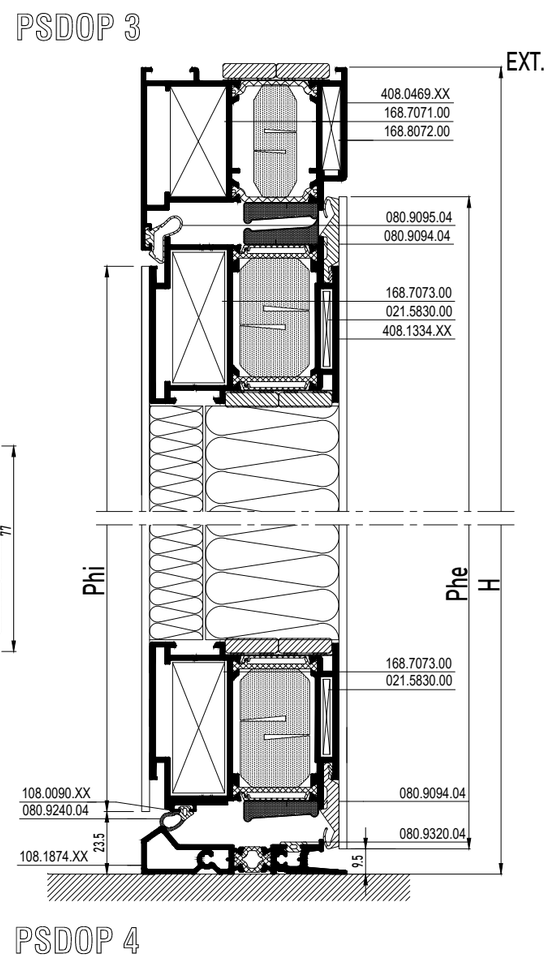

SECTIONS MASTERLINE 8-Fu Pivot Door

PIVOT DOOR INWARD OPENING

MASTERLINE 8-Fu

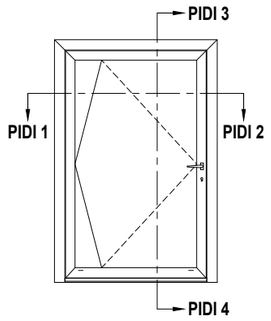

PIDI 3

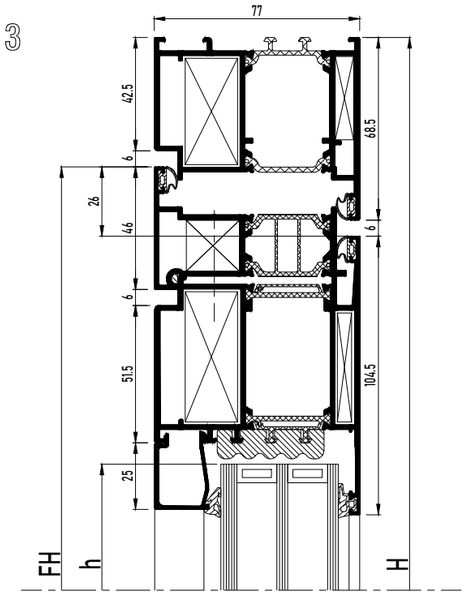

PIDI 4

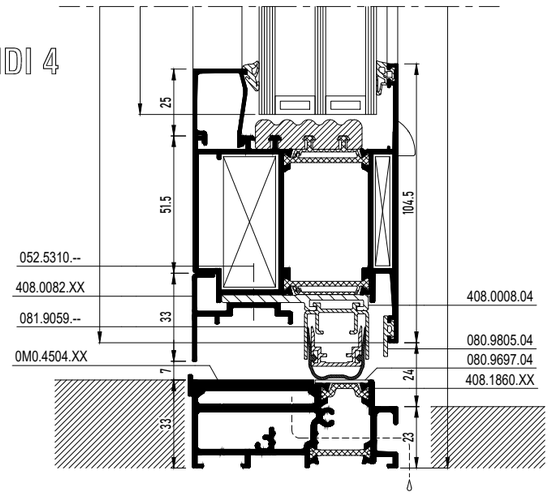

PIDI 1

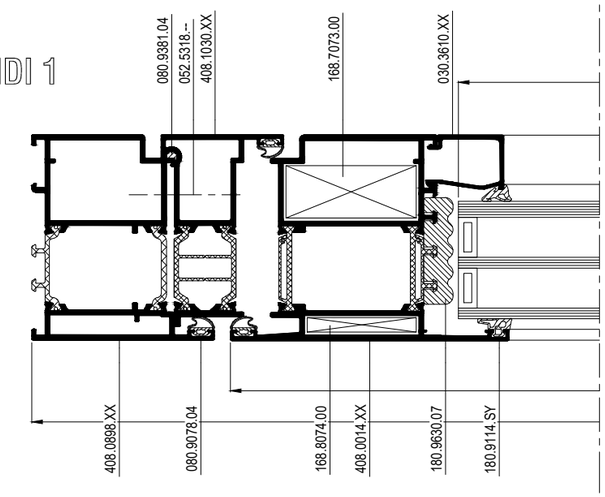

PIDI 2

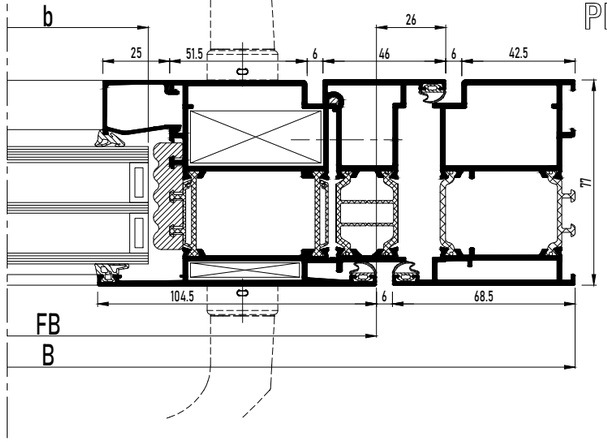

			#	Lm
408.0898.XX			1	B
			1	H
			1	H
408.1860.XX			1	B - 167
0M0.4504.XX			1	B - 167
408.0014.XX			2	B - 149
			2	H - 121.5
408.1030.XX			1	H - 48.5
			1	H - 88.5
408.1032.XX [1]			1	19H.F. ...
			1	19H.F. ...
408.0082.XX			1	B - 197
408.0008.04			1	B - 182
030.3610.XX			2	B - 304
			2	H - 326.5

b = B - 320

h = H - 292.5

[1] DIN L = 408.1031.XX

[2] DIN L = 169.7550.04

[3] DIN L = 169.7450.04

[4] Afhankelijk van de vleugelbreedte
En fonction de la largeur de l'ouvrant
Depending on vent width
Abhängig von der Flügelbreite

≥ 50mm

ZIE BEGLAZINGSMETHODE
VOIR METHODE DE VITRAGE
SEE GLAZING METHOD
SIEHE VERGLASUNGSWEISE

BESLAG DEUREN > ZIE "HARDWARE CONFIGURATOR"
ACCESSOIRES PORTES > VOIRE "HARDWARE CONFIGURATOR"
DOORS GEAR > SEE "HARDWARE CONFIGURATOR"
TUERENBESCHLAG > SIEHE "HARDWARE CONFIGURATOR"

		#
168.7071.00		2
168.8072.00		2
168.7073.00		4
168.8074.00		4
168.7002.00		2
160.8750.--		4
169.8748.04		PROD STEPS
169.7560.04 [2]		1
169.7460.04 [3]		1
052.5311.--		4
052.5314.--		2
169.7470.04		1
052.5311.--		4
081.9092.04		1x(50mm)
		2x(60mm)
		2x(56mm)
080.9078.04		(3xB)+(6xH)
080.9091.04		2
080.9124.SY		(2xb)+(2xh)
180.9114.SY		(2xb)+(2xh)
180.9630.07		(2xb)+(2xh)
080.9805.04		(1xB)
080.9697.04		(1xB)
080.9381.04		(1xB)+(2xH)
081.9059.-- [4]		B - 153
052.5310.--		B/300mm
052.5318.--		1/300mm
069.6831.XX		PROD STEPS
062.8112.04		1
165.7560.--		1
165.7570.--		1
165.7574.00		1

SECTIONS MASTERLINE 8-Fu Pivot Door

PIVOT DOOR INWARD OPENING ONE-SIDED PANEL

MASTERLINE 8-Fu

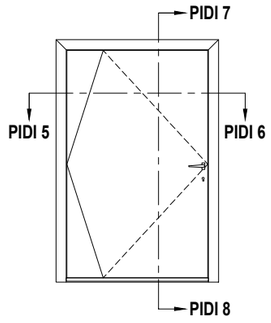

PIDI 7

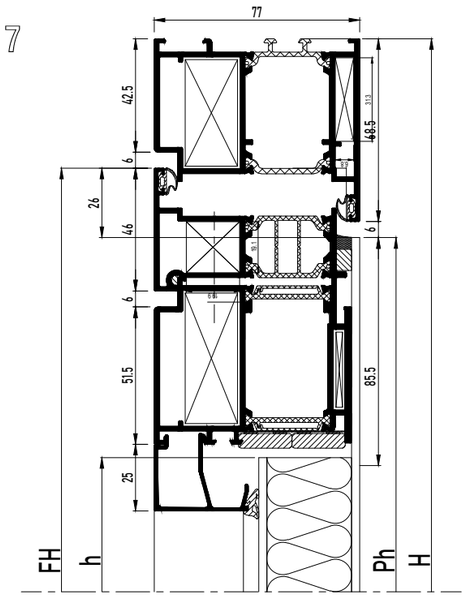

PIDI 8

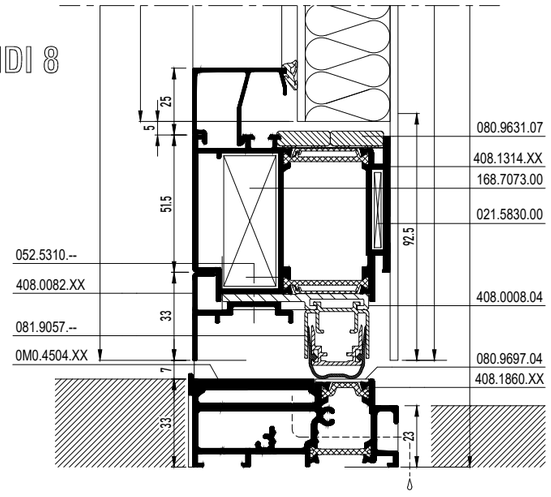

PIDI 5

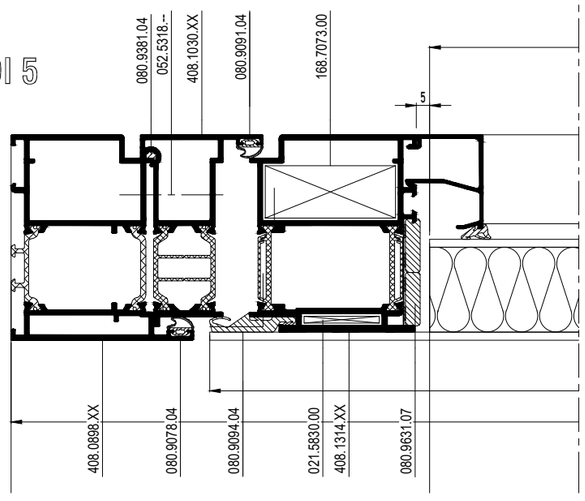

PIDI 6

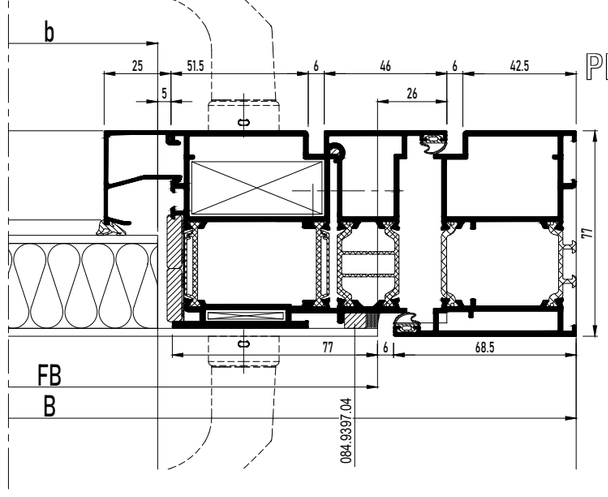

			#	Lm
408.0898.XX			1	B
			1	H
			1	H
408.1860.XX			1	B - 167
0M0.4504.XX			1	B - 167
408.1314.XX			2	B - 179
			2	H - 151.5
408.1030.XX			1	H - 48.5
			1	H - 88.5
408.1032.XX [1]			1	19H.F. ...
			1	19H.F. ...
408.0082.XX			1	B - 197
408.0008.04			1	B - 182
130.3650.XX			2	B - 304
			2	H - 326.5

b = B - 314	
h = H - 286.5	

INT.

Pb = B - 149	
Ph = H - 114.5	

EXT.

[1] DIN L = 408.1031.XX
[2] DIN L = 169.7550.04
[3] DIN L = 169.7450.04
[4] Afhankelijk van de vleugelbreedte
En fonction de la largeur de l'ouvrant
Depending on vent width
Abhängig von der Flügelbreite

		#
168.7071.00		2
168.8072.00		2
168.7073.00		4
021.5830.00		4
168.7002.00		2
169.7560.04 [2]		1
169.7460.04 [3]		1
052.5311.--		4
052.5314.--		2
169.7470.04		1
052.5311.--		4
081.9092.04		1 x 50mm
		2 x 60mm
		2 x 56mm
080.9078.04		2xB + 4xH
080.9094.04		1xB + 1xH
084.9397.04		1xB + 1xH
080.9124.SY		2xb + 2xh
080.9631.07		4xb + 4xh
081.9091.04		2 x 56mm
080.9697.04		1 x B
080.9381.04		1xB + 2xH
081.9059.-- [4]		B - 153
052.5310.--		B/300mm
052.5318.--		1/300mm
062.8112.04		1
165.7560.--		1
165.7570.--		1
165.7574.00		1

BESLAG DEUREN > ZIE "HARDWARE CONFIGURATOR
ACCESSOIRES PORTES > VOIRE "HARDWARE CONFIGURATOR"
DOORS GEAR > SEE "HARDWARE CONFIGURATOR"
TUERENBESCHLAG > SIEHE "HARDWARE CONFIGURATOR"

Het verkleven van de panelen moet gebeuren volgens de voorschriften van de leverancier van de panelen. Reynaers geeft geen garantie op deze verkleving.
Le collage des panneaux doit se faire selon les instructions du fournisseur des panneaux. La garantie Reynaers ne s'applique pas à ce collage.
Glueing of the panels should be done according to the suppliers' instructions. The Reynaers guarantee does not cover this glueing.
Die Verklebung der Füllungen soll gemäß den Richtlinien des Lieferantens gemacht werden. Die Reynaers Garantie gilt aber nicht für diese Verklebung.

SECTIONS MASTERLINE 8-Fu Pivot Door

PIVOT DOOR INWARD OPENING DOUBLE SIDED PANEL

MASTERLINE 8-Fu

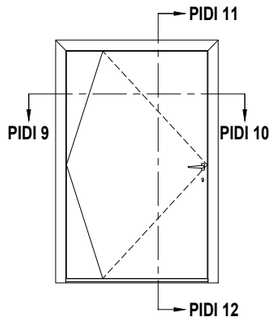

PIDI 12

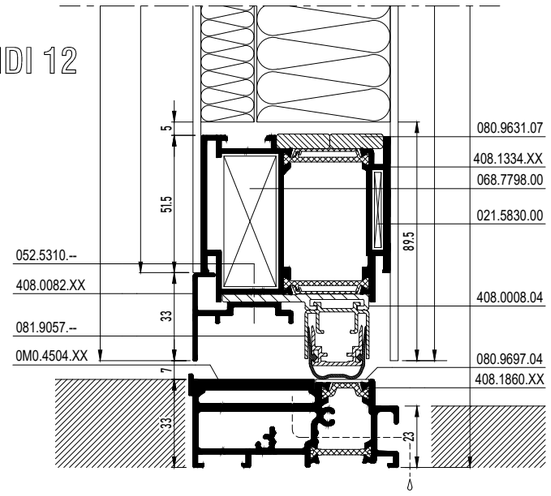

PIDI 11

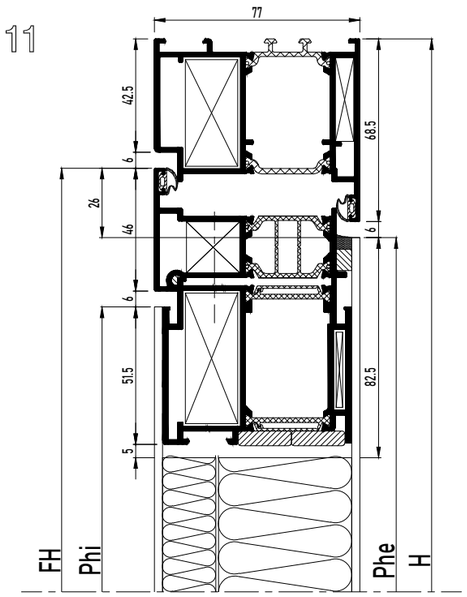

PIDI 9

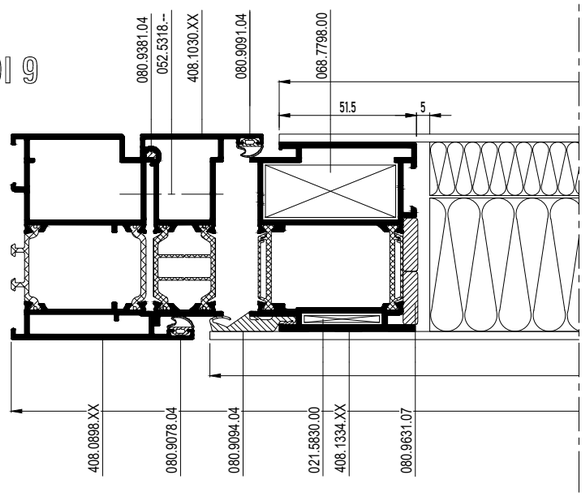

PIDI 10

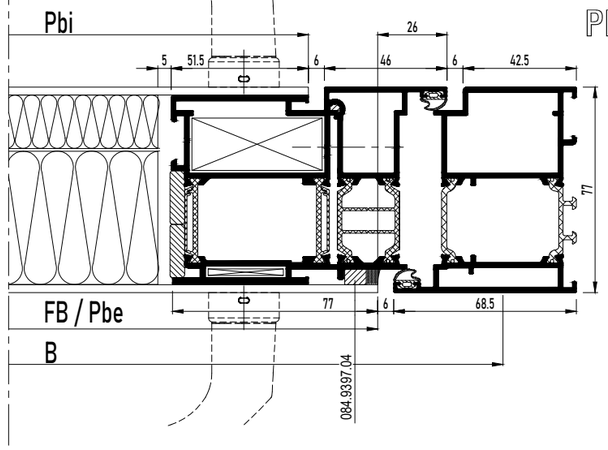

			#	Lm
408.0898.XX			1	B
			1	H
			1	H
408.1860.XX			1	B - 167
0M0.4504.XX			1	B - 167
408.1334.XX			2	B - 179
			2	H - 151.5
408.1030.XX			1	H - 48.5
			1	H - 88.5
408.1032.XX [1]			1	19H.F. ...
			1	19H.F. ...
408.0082.XX			1	B - 197
408.0008.04			1	B - 182

	#
168.7071.00	2
168.8072.00	2
068.7798.00	4
021.5830.00	4
168.7002.00	2
169.7560.04 [2]	1
169.7460.04 [3]	1
052.5311.--	4
052.5314.--	2
169.7470.04	1
052.5311.--	4
081.9092.04	1 x 50mm
	2 x 60mm
	2 x 56mm
080.9078.04	2xB + 4xH
080.9094.04	1xB + 1xH
084.9397.04	1xB + 1xH
080.9631.07	4xb + 4xh
080.9697.04	1 x B
080.9381.04	1xB + 2xH
081.9059.-- [4]	B - 153
052.5310.--	B/300mm
052.5318.--	1/300mm
062.8112.04	1
165.7560.--	1
165.7570.--	1
165.7574.00	1

INT.

Pbi = B - 201
Phi = H - 173.5

EXT.

Pbe = B - 149
Phe = H - 114.5

[1] DIN L = 408.1031.XX
[2] DIN L = 169.7550.04
[3] DIN L = 169.7450.04
[4] Afhankelijk van de vleugelbreedte
En fonction de la largeur de l'ouvrant
Depending on vent width
Abhängig von der Flügelbreite

BESLAG DEUREN > ZIE "HARDWARE CONFIGURATOR"
ACCESSOIRES PORTES > VOIRE "HARDWARE CONFIGURATOR"
DOORS GEAR > SEE "HARDWARE CONFIGURATOR"
TUERENBESCHLAG > SIEHE "HARDWARE CONFIGURATOR"

Het verkleven van de panelen moet gebeuren volgens de voorschriften van de leverancier van de panelen. Reynaers geeft geen garantie op deze verkleving.
Le collage des panneaux doit se faire selon les instructions du fournisseur des panneaux. La garantie Reynaers ne s'applique pas à ce collage.
Glueing of the panels should be done according to the suppliers' instructions. The Reynaers guarantee does not cover this glueing.
Die Verklebung der Füllungen soll gemäß den Richtlinien des Lieferantens gemacht werden. Die Reynaers Garantie gilt aber nicht für diese Verklebung.

SECTIONS MASTERLINE 8-Fu Pivot Door

PIVOT DOOR OUTWARD OPENING

MASTERLINE 8-Fu

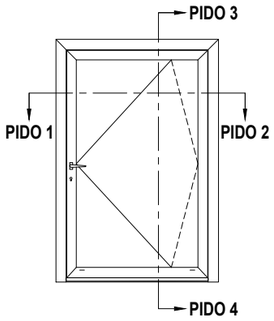

PIDO 3

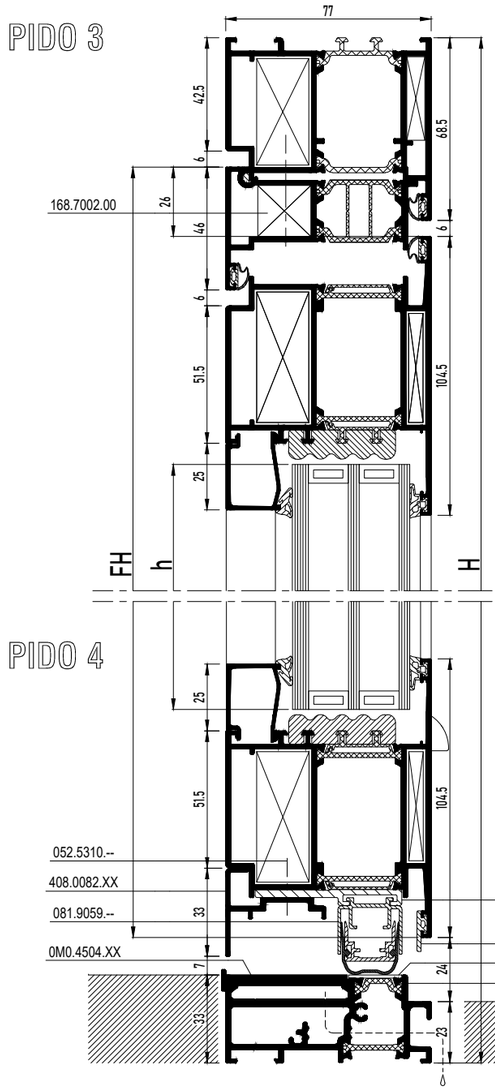

PIDO 4

PIDO 1

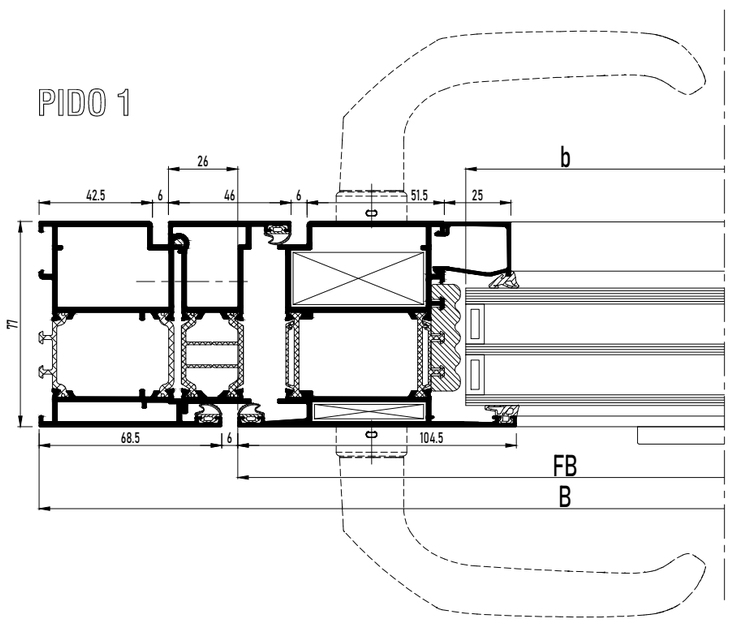

PIDO 2

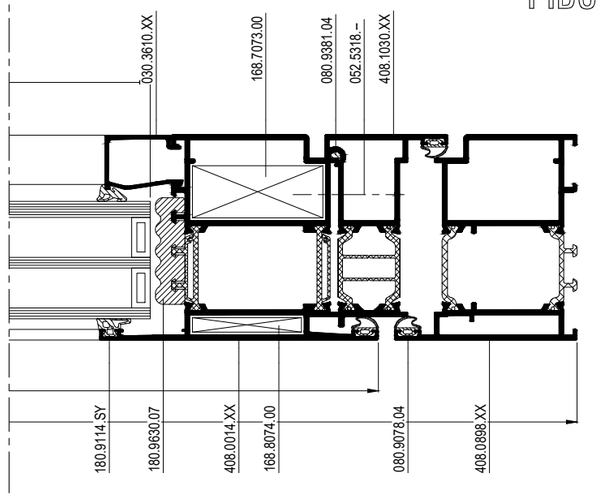

			#	Lm
408.0898.XX			1	B
			1	H
			1	H
408.1860.XX			1	B - 167
0M0.4504.XX			1	B - 167
408.0014.XX			2	B - 149
			2	H - 121.5
408.1030.XX			1	H - 48.5
			1	H - 88.5
408.1032.XX [1]			1	19H.F. ...
			1	19H.F. ...
408.0082.XX			1	B - 197
408.0008.04			1	B - 182
030.3610.XX			2	B - 304
			2	H - 326.5

b = B - 320
h = H - 292.5

[1] DIN L = 408.1031.XX

[2] DIN L = 169.7550.04

[3] DIN L = 169.7450.04

[4] Afhankelijk van de vleugelbreedte
En fonction de la largeur de l'ouvrant
Depending on vent width
Abhängig von der Flügelbreite

ZIE BEGLAZINGSMETHODE
VOIR METHODE DE VITRAGE
SEE GLAZING METHOD
SIEHE VERGLASUNGSWEISE
≥ 50mm

BESLAG DEUREN > ZIE "HARDWARE CONFIGURATOR"
ACCESSOIRES PORTES > VOIRE "HARDWARE CONFIGURATOR"
DOORS GEAR > SEE "HARDWARE CONFIGURATOR"
TUERENBESCHLAG > SIEHE "HARDWARE CONFIGURATOR"

		#
168.7071.00		2
168.8072.00		2
168.7073.00		4
168.8074.00		4
168.7002.00		2
160.8750.--		4
169.8748.04		PROD STEPS
169.7560.04 [2]		1
169.7460.04 [3]		1
052.5311.--		4
052.5314.--		2
169.7470.04		1
052.5311.--		4
081.9092.04		1 x 50mm
		2 x 60mm
		2 x 56mm
080.9078.04		3xB + 6xH
080.9091.04		2
080.9124.SY		2xb + 2xh
180.9114.SY		2xb + 2xh
180.9630.07		2xb + 2xh
080.9805.04		1 x B
080.9697.04		1 x B
080.9381.04		1xB + 2xH
081.9059.-- [4]		B - 153
052.5310.--		B/300mm
052.5318.--		1/300mm
069.6831.XX		PROD STEPS
062.8112.04		1
165.7560.--		1
165.7570.--		1
165.7574.00		1

SECTIONS MASTERLINE 8-Fu Panel Door

MAGNETUDE PANEL DOOR DOUBLE SIDED INWARD OPENING WITH DOUBLE WEATHER STRIP

MASTERLINE 8-Fu

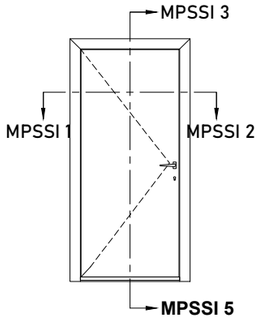

			#	Lm
408.0898.XX			1	B
			1	H
			1	H
408.0226.XX			2	B - 97
			2	H - 58
030.3608.XX			2	B - 252
			2	H - 263
108.0080.XX			1	B - 133
108.1873.XX			1	B - 143

		#
168.7071.00		2
168.8072.00		2
168.7073.00		4
021.5830.00		4
069.8757.04		4
069.8360.04		1
052.5313.--		4
052.5316.--		4
069.8426.04		2
052.5316.--		4
069.8427.04		2
069.8373.04		1
080.9078.04		(3xB)+(4xH)
080.9126.SY		(2xb)+(2xh)
180.9114.SY		(2xb)+(2xh)
052.5316.--		1/300mm
080.9320.04		B
080.9240.04		19H.F. ...
080.9630.07		(2xB) + (2xH)
084.9118.04		(2xH) + (2xB)

INT.

Pbi = B - 264
Phi = H - 225

EXT.

Pbe = B - 149
Phe = H - 110.5

BESLAG DEUREN > ZIE "OPENING DOORS"
ACCESSOIRES PORTES > VOIRE "OPENING DOORS"
DOORS GEAR > SEE "OPENING DOORS"
TUERENBESCHLAG > SIEHE "OPENING DOORS"

MAGNETISCH PANEEL INFO
INFO PANNEAU MAGNÉTIQUE
MAGNETIC PANEL INFO
MAGNETISCHE PANEL INFORMATIONEN
WWW.HARINCK.BE

MPSSI 1 MPSSI 2

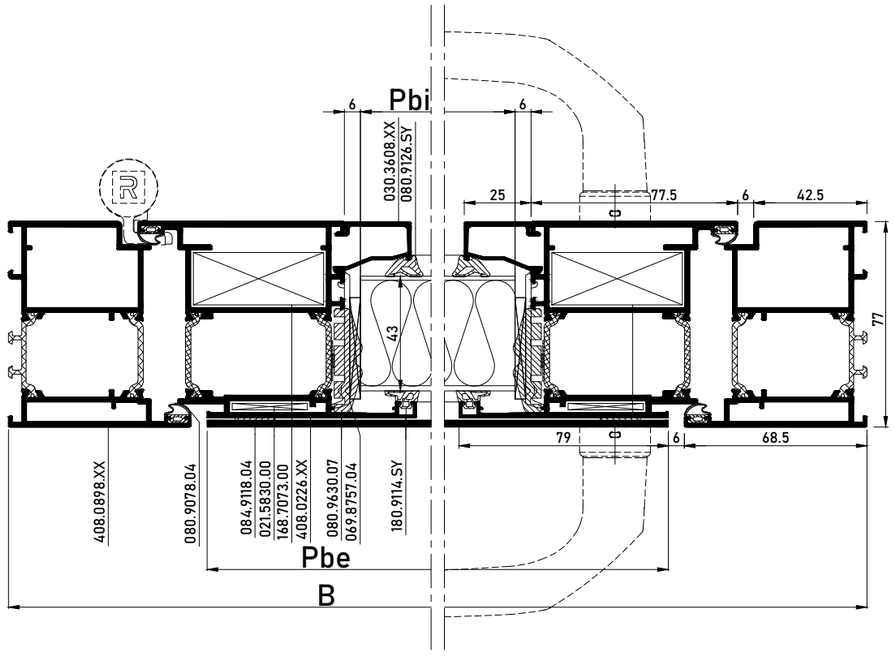

MPSSI 3

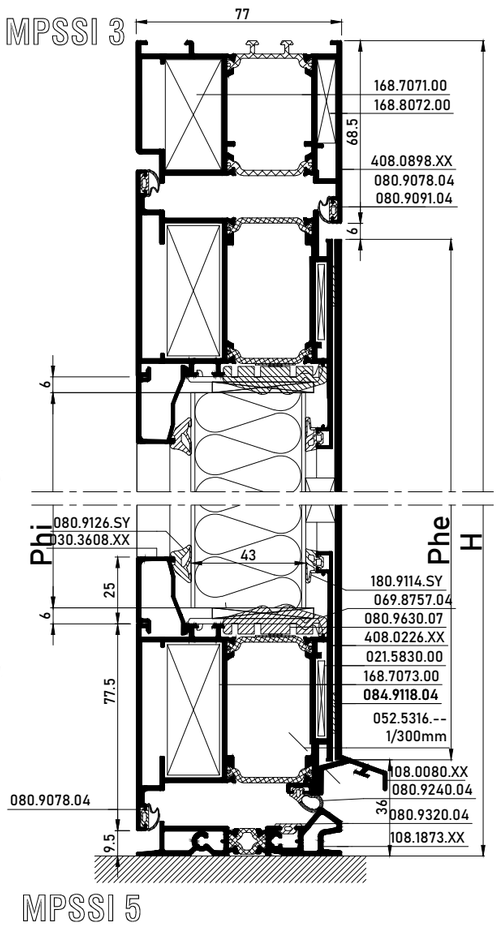

MPSSI 5

SECTIONS MASTERLINE 8-Fu Panel Door

MAGNETUDE Z-T PANEL DOOR INWARD OPENING WITH THRESHOLD

MASTERLINE 8-Fu

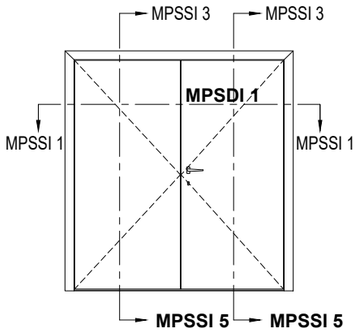

INT. B1	b1 = B1 - 205.5
	h = H - 225
INT. B2	b2 = B2 - 205.5
	h = H - 225
EXT. B1	Pb1 = B1 - 64.5
	Ph = H -110.5
EXT. B2	Pb2 = B2 - 90.5
	Ph = H -110.5

			#	Lm
408.0898.XX			1	B
			1	H
			1	H
408.0226.XX			2	B1 - 38.5
			2	B2 - 38.5
			3	H - 58
408.0214.XX			1	H - 88
108.0080.XX			1	B1 - 58.5
			1	B2 - 74.5
108.1873.XX			1	B - 143
030.3608.XX			2	B1 - 193.5
			2	B2 - 193.5
			4	H - 263

		#
168.7071.00		2
168.8072.00		2
168.7073.00		6
168.7088.00		2
021.5830.00		8
069.8757.04		8
069.8360.04		1
052.5313.--		4
052.5316.--		4
069.8426.04		4
052.5316.--		8
069.8427.04		2
081.9236.04		2 x (60.5mm)
069.8373.04		2
069.8511.04		1
069.8512.04		1
169.8522.04		2
080.9078.04		(3xB)+(5xH)
080.9094.04		(1xH)
080.9240.04		(1xB)
080.9320.04		(1xB)
080.9126.SY		(2xb1)+(2xb2)
		4xh
180.9114.SY		(2xb1)+(2xb2)
		4xh
080.9630.07		(2xB1)+(2xB2)
		4xH
052.5316.--		1/300mm
084.9118.04		(4xH) + (4xB)

BESLAG DEUREN > ZIE "OPENING DOORS"
ACCESSOIRES PORTES > VOIRE "OPENING DOORS"
DOORS GEAR > SEE "OPENING DOORS"
TUERENBESCHLAG > SIEHE "OPENING DOORS"

MAGNETISCH PANEEL INFO
INFO PANNEAU MAGNÉTIQUE
MAGNETIC PANEL INFO
MAGNETISCHE PANEL INFORMATIONEN
WWW.HARINCK.BE

MPSDI 1

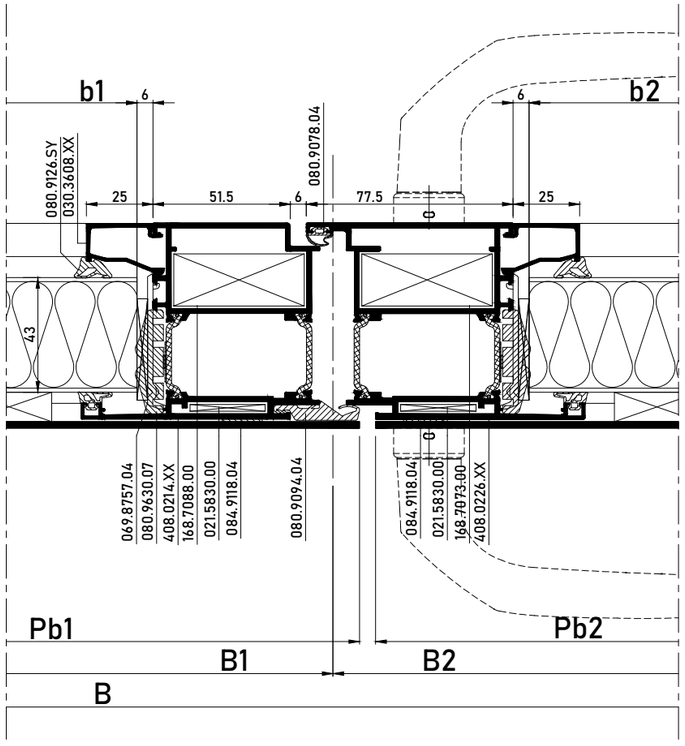

MPSSI 5

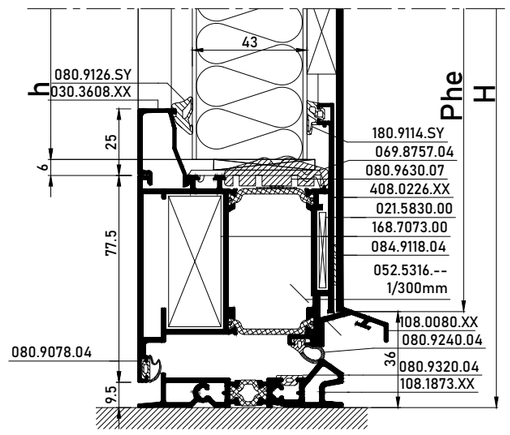

SECTIONS MASTERLINE 8-Fu Panel Door

MAGNETUDE PANEL DOOR INWARD OPENING WITH AUTOMATIC DRAUGHT EXCLUDER

MASTERLINE 8-Fu

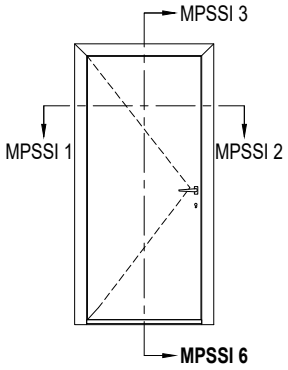

INT.	Pbi = B - 264
	Phi = H - 225
EXT.	Pbe = B - 149
	Phe = H - 84

		#	Lm
408.0898.XX		1	B
		1	H
		1	H
408.0226.XX		2	B - 97
		2	H - 58
030.3608.XX		2	B - 252
		2	H - 263

		#
168.7071.00		2
168.8072.00		2
168.7073.00		4
021.5830.00		4
069.8757.04		4
169.8513.04		1
052.5316.--		4
169.8510.04		1
069.8426.04		2
052.5316.--		4
081.9236.04		4 x (60.5mm)
081.9092.04		2 x (60.5mm)
080.9078.04		(2xB)+(4xH)
080.9126.SY		(2xb)+(2xh)
180.9114.SY		(2xb)+(2xh)
081.9040.--		19H.F. ...
080.9630.07		(2xB) + (2xH)
084.9118.04		(2xH) + (2xB)

MPSSI 6

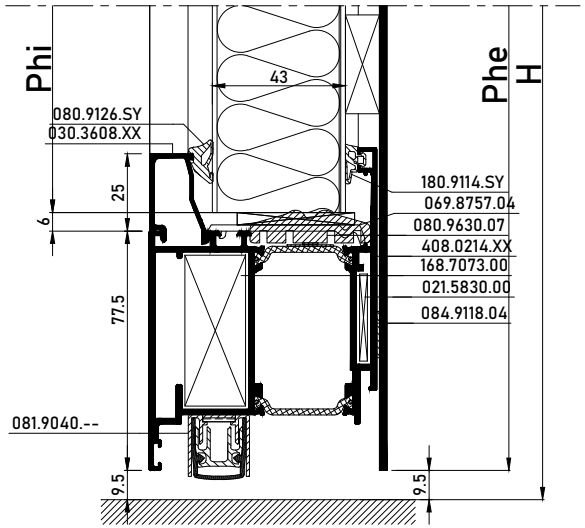

BESLAG DEUREN > ZIE "OPENING DOORS"
ACCESSOIRES PORTES > VOIRE "OPENING DOORS"
DOORS GEAR > SEE "OPENING DOORS"
TUERENBESCHLAG > SIEHE "OPENING DOORS"

MAGNETISCH PANEEL INFO
INFO PANNEAU MAGNÉTIQUE
MAGNETIC PANEL INFO
MAGNETISCHE PANEL INFORMATIONEN
WWW.HARINCK.BE

SECTIONS MASTERLINE 8-Fu Panel Door

MAGNETUDE Z-T PANEL DOOR DOUBLE SIDED INWARD OPENING WITH AUTOMATIC DRAUGHT EXCLUDER

MASTERLINE 8-Fu

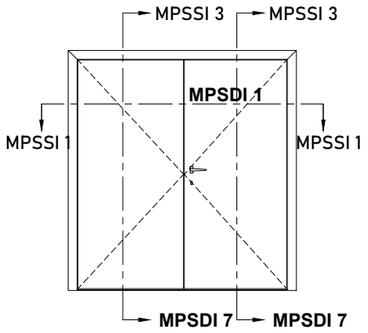

INT. B1	b1 = B1 - 205.5 h = H - 225
INT. B2	b2 = B2 - 205.5 h = H - 225
EXT. B1	Pb1 = B1 - 64.5 Ph = H - 84
EXT. B2	Pb2 = B2 - 90.5 Ph = H - 84

			#	Lm
408.0898.XX			1	B
			1	H
			1	H
408.0226.XX			2	B1 - 38.5
			2	B2 - 38.5
			3	H - 58
408.0214.XX			1	H - 88
030.3608.XX			2	B1 - 193.5
			2	B2 - 193.5
			4	H - 263

		#
168.7071.00		2
168.8072.00		2
168.7073.00		6
168.7088.00		2
021.5830.00		8
069.8757.04		8
169.8513.04		1
052.5316.--		4
169.8510.04		2
069.8426.04		4
052.5316.--		8
081.9229.07		6 x (60.5mm)
069.8511.04		1
069.8512.04		1
169.8522.04		2
080.9078.04		(4xB)+(5xH)
080.9094.04		H
080.9126.SY		(2xb1)+(2xb2) +(4xh)
180.9114.SY		(2xb1)+(2xb2) +(4xh)
080.9630.07		(2xB1)+(2xB2) 4xH
081.9040.--		19H.F. ...
084.9118.04		(4xH) + (4xB)

BESLAG DEUREN > ZIE "OPENING DOORS"
ACCESSOIRES PORTES > VOIRE "OPENING DOORS"
DOORS GEAR > SEE "OPENING DOORS"
TUERENBESCHLAG > SIEHE "OPENING DOORS"

MAGNETISCH PANEEL INFO
INFO PANNEAU MAGNÉTIQUE
MAGNETIC PANEL INFO
MAGNETISCHE PANEL INFORMATIONEN
WWW.HARINCK.BE

MPSDI 1

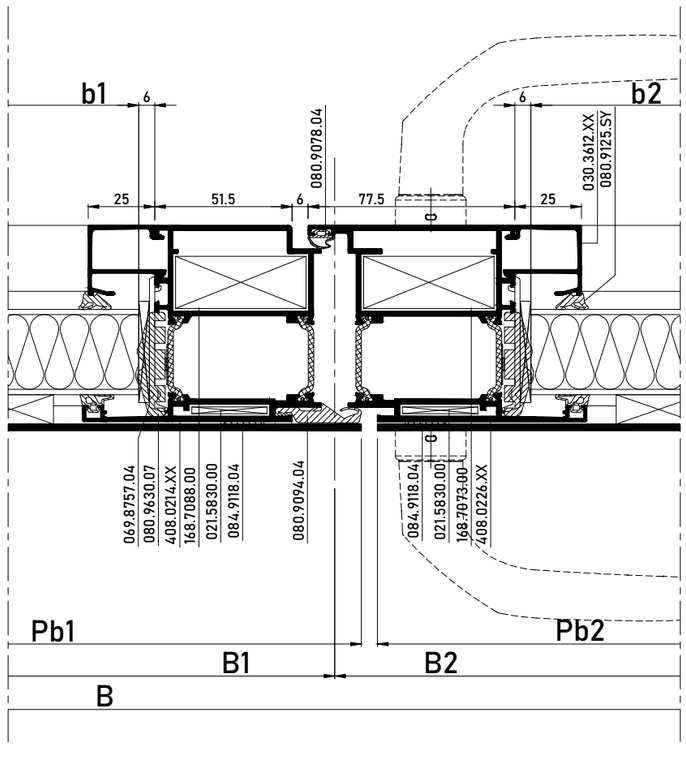

MPSDI 7

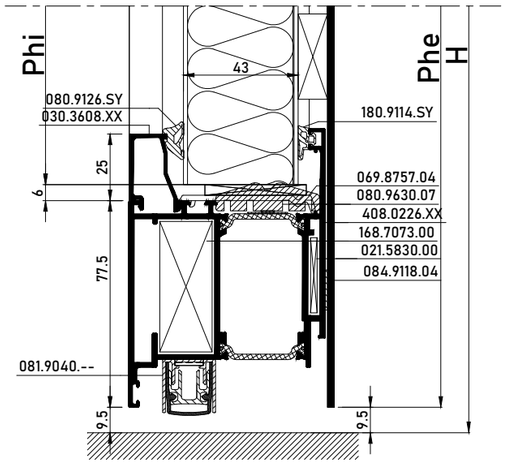

SECTIONS MASTERLINE 8-Fu Panel Door

MAGNETUDE PANEL DOOR INWARD OPENING WITH BRUSH

MASTERLINE 8-Fu

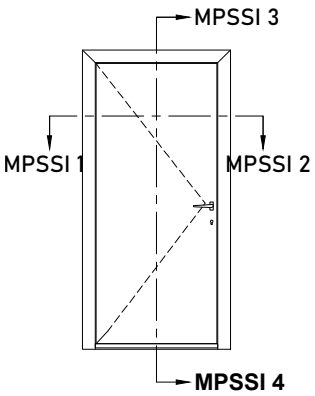

			#	Lm
408.0898.XX			1	B
			1	H
			1	H
408.0226.XX			2	B - 97
			2	H - 58
030.3608.XX			2	B - 252
			2	H - 263
108.0030.XX			1	B - 139

INT.	Pbi = B - 264
	Phi = H - 225
EXT.	Pbe = B - 149
	Phe = H - 84

168.7071.00		2
168.8072.00		2
168.7073.00		4
021.5830.00		4
069.8757.04		4
169.8513.04		1
052.5316.--		4
069.8426.04		2
052.5316.--		4
080.9078.04		(2xB)+(4xH)
080.9126.SY		(2xb)+(2xh)
180.9114.SY		(2xb)+(2xh)
052.5310.--		1/300mm
081.9236.04		4 x (60.5mm)
081.9092.04		2 x (60.5mm)
081.9141.04		19H.F. ...
080.9630.07		(2xB) + (2xH)
084.9118.04		(2xH) + (2xB)

BESLAG DEUREN > ZIE "OPENING DOORS"
ACCESSOIRES PORTES > VOIRE "OPENING DOORS"
DOORS GEAR > SEE "OPENING DOORS"
TUERENBESCHLAG > SIEHE "OPENING DOORS"

MAGNETISCH PANEEL INFO
INFO PANNEAU MAGNÉTIQUE
MAGNETIC PANEL INFO
MAGNETISCHE PANEL INFORMATIONEN
WWW.HARINCK.BE

MPSSI 4

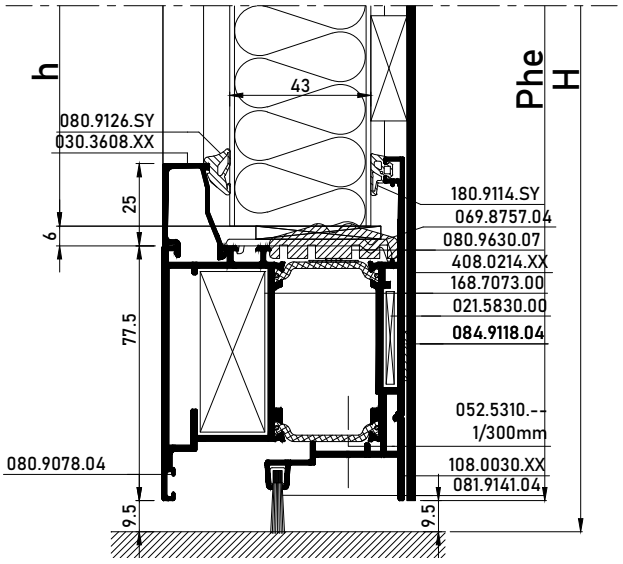

SECTIONS MASTERLINE 8-Fu Panel Door

MAGNETUDE Z-T PANEL DOOR INWARD OPENING WITH BRUSH

MASTERLINE 8-Fu

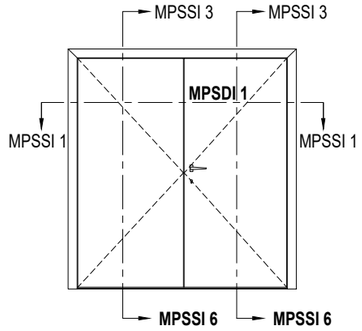

INT. B1	b1 = B1 - 205.5	h = H - 225
INT. B2	b2 = B2 - 205.5	h = H - 225
EXT. B1	Pb1 = B1 - 64.5	Ph = H - 84
EXT. B2	Pb2 = B2 - 90.5	Ph = H - 84

	#	Lm
408.0898.XX	1	B
	1	H
	1	H
408.0226.XX	2	B1 - 38.5
	2	B2 - 38.5
	3	H - 58
408.0214.XX	1	H - 88
108.0030.XX	1	B1-77.5
	1	B2-80.5
030.3608.XX	2	B1 - 193.5
	2	B2 - 193.5
	4	H - 263

	#
168.7071.00	2
168.8072.00	2
168.7073.00	6
168.7088.00	2
021.5830.00	8
069.8757.04	8
169.8513.04	1
052.5316.--	4
069.8426.04	4
052.5316.--	8
081.9236.04	6 x (60.5mm)
081.9092.04	2 x (60.5mm)
081.9141.04	19H.F. ...
069.8511.04	1
069.8512.04	1
169.8522.04	2
080.9094.04	B1 + B2
	+(4xH)
080.9078.04	(4xB)+(5xH)
080.9126.SY	(2xb1)+(2xb2)
	+(4xh)
180.9114.SY	(2xb1)+(2xb2)
	+(4xh)
080.9630.07	(2xB1)+(2xB2)
	4xH
052.5310.--	1/300mm
084.9118.04	(4xH) + (4xB)

MPSDI 1

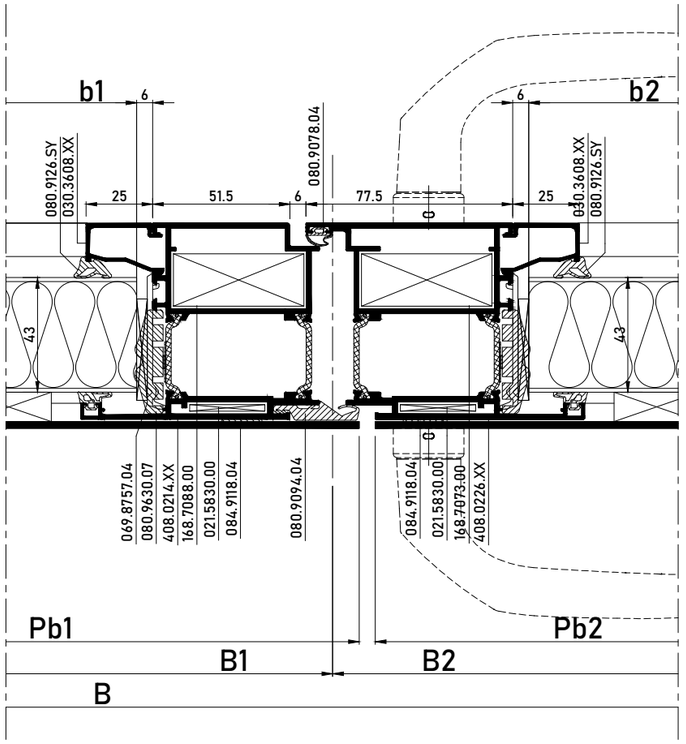

BESLAG DEUREN > ZIE "OPENING DOORS"
ACCESSOIRES PORTES > VOIRE "OPENING DOORS"
DOORS GEAR > SEE "OPENING DOORS"
TUERENBESCHLAG > SIEHE "OPENING DOORS"

MAGNETISCH PANEEL INFO
INFO PANNEAU MAGNÉTIQUE
MAGNETIC PANEL INFO
MAGNETISCHE PANEL INFORMATIONEN
WWW.HARINCK.BE

MPSSI 6

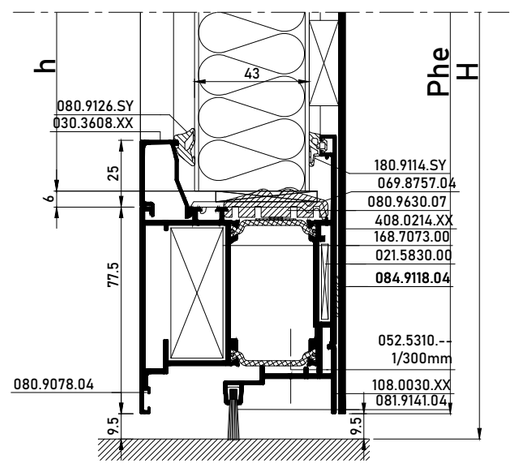

SECTIONS MASTERLINE 8-Fu Panel Door

MAGNETUDE PANEL DOOR DOUBLE SIDED INWARD OPENING WITH DOUBLE WEATHER STRIP

MASTERLINE 8-Fu

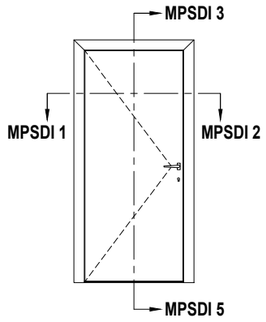

INT. Pbi = B - 97	Phi = H - 58
EXT. Pbe = B - 149	Phe = H - 110.5
IN. pb = B - 266	ph = H - 227

			#	Lm
408.0898.XX			1	B
			1	H
			1	H
408.0224.XX			2	B - 127
			2	H - 88
108.0080.XX			1	B - 133
108.1873.XX			1	B - 143
030.3644.XX			2	B - 252
			2	H - 263

		#
168.7071.00		2
168.8072.00		2
168.7073.00		4
021.5830.00		4
069.8748.04		4
069.8360.04		1
052.5313.--		4
052.5316.--		4
069.8426.04		2
052.5316.--		4
069.8427.04		2
052.5316.--		1/300mm
069.8373.04		1
080.9505.SY		(2xB)+(2xH)
080.9124.SY		(2xB)+(2xH)
080.9078.04		(1xB)+(2xH)
080.9320.04		B
080.9240.04		19H.F. ...
080.9094.04		(2xB)+(2xH)
080.9630.07		(2xB) + (2xH)
084.9118.04		(4xH) + (4xB)

BESLAG DEUREN > ZIE "OPENING DOORS"
ACCESSOIRES PORTES > VOIRE "OPENING DOORS"
DOORS GEAR > SEE "OPENING DOORS"
TUERENBESCHLAG > SIEHE "OPENING DOORS"

MAGNETISCH PANEEL INFO
INFO PANNEAU MAGNÉTIQUE
MAGNETIC PANEL INFO
MAGNETISCHE PANEL INFORMATIONEN
WWW.HARINCK.BE

MPSDI 1

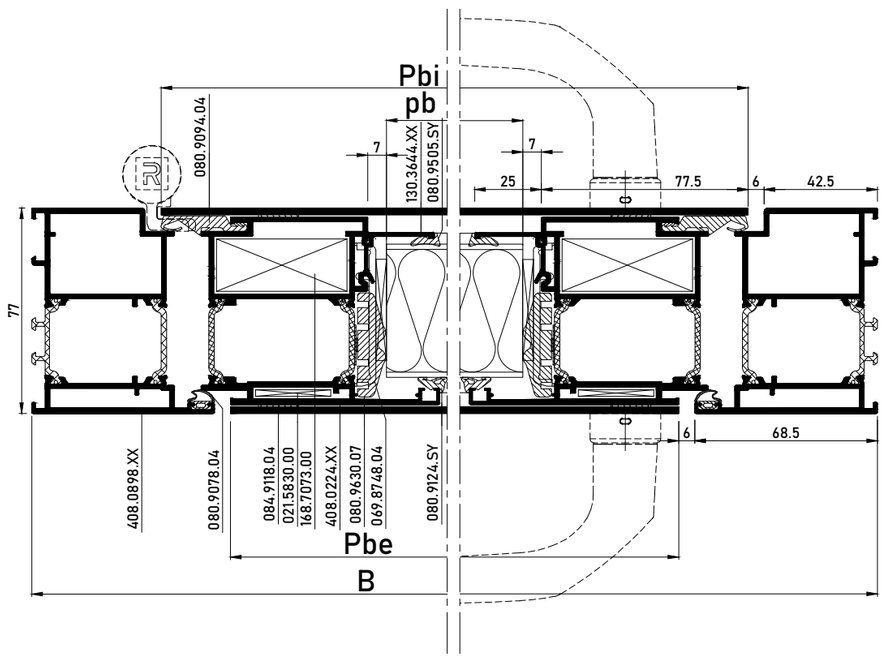

MPSDI 2

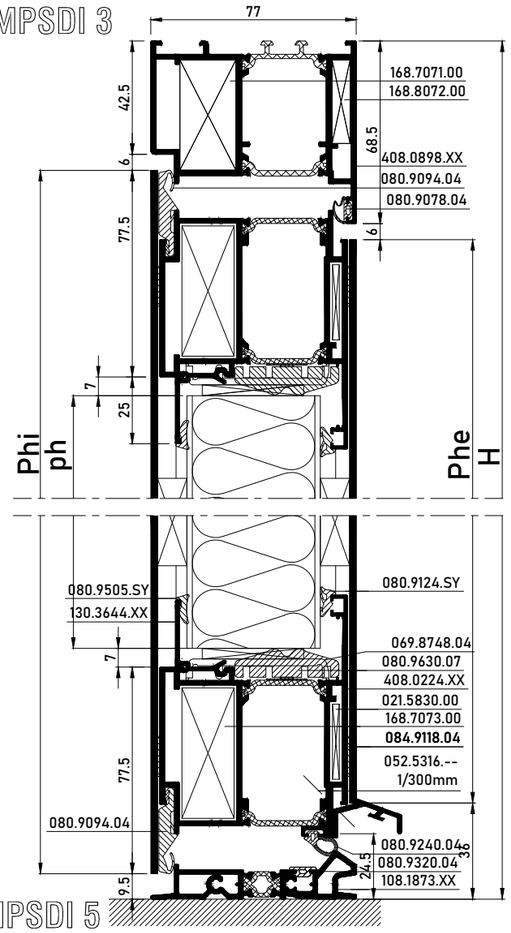

MPSDI 5

SECTIONS MASTERLINE 8-Fu Panel Door

MAGNETUDE Z-T PANEL DOOR DOUBLE SIDED INWARD OPENING WITH THRESHOLD

MASTERLINE 8-Fu

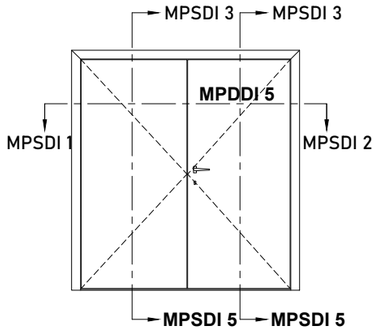

INT. B1	Pbi1 = B1-64.5
	Phi = H-58
INT. B2	Pbi2 = B2-38.5
	Phi = H-58
EXT. B1	Pbe1 = B1-64.5
	Phe = H-110.5
EXT. B2	Pbe2 = B2-90.5
	Phe = H-110.5
IN. b1	pb1=B1 - 207.5
	ph = H - 227
IN. b2	pb2=B2 - 207.5
	ph = H - 227

			#	Lm
408.0898.XX			1	B
			1	H
			1	H
408.0224.XX			2	B1 - 68.5
			2	B2 - 68.5
			4	H - 88.2
108.0080.XX			1	B1 - 58.5
			1	B2 - 74.5
108.1873.XX			1	B - 143
130.3644.XX			2	B1 - 193.5
			2	B2 - 193.5
			4	H - 263

BESLAG DEUREN > ZIE "OPENING DOORS"
ACCESSOIRES PORTES > VOIRE "OPENING DOORS"
DOORS GEAR > SEE "OPENING DOORS"
TUERENBESCHLAG > SIEHE "OPENING DOORS"

MAGNETISCH PANEEL INFO
INFO PANNEAU MAGNÉTIQUE
MAGNETIC PANEL INFO
MAGNETISCHE PANEL INFORMATIONEN
WWW.HARINCK.BE

		#
168.7071.00		2
168.8072.00		2
168.7073.00		6
168.7088.00		2
021.5830.00		8
069.8748.04		8
069.8360.04		1
052.5313.--		4
052.5316.--		4
069.8426.04		4
052.5316.--		8
069.8427.04		2
169.8522.04		2
080.9505.SY		(2xB1)+(2xB2)
		4H
080.9124.SY		(2xB1)+(2xB2)
		4H
080.9078.04		(1xB)+(2xH)
080.9094.04		(2xB1)+(2xB2)
		(4xH)
080.9240.04		(1xB)
080.9320.04		(1xB)
080.9630.07		(2xB1)+(2xB2)
		4xH
052.5316.--		1/300mm
084.9118.04		(8xH) + (8xB)

MPDDI 5

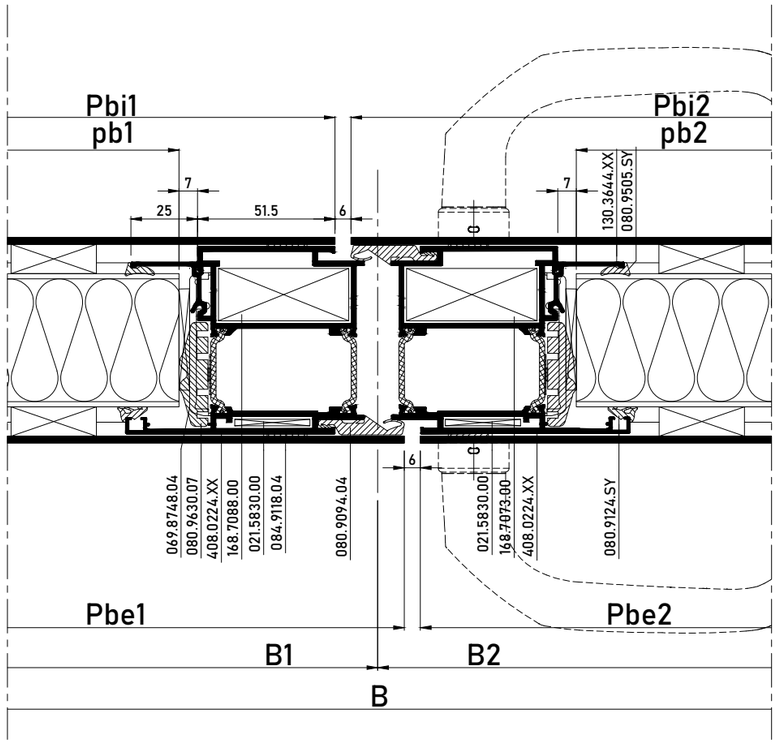

MPSSO 5

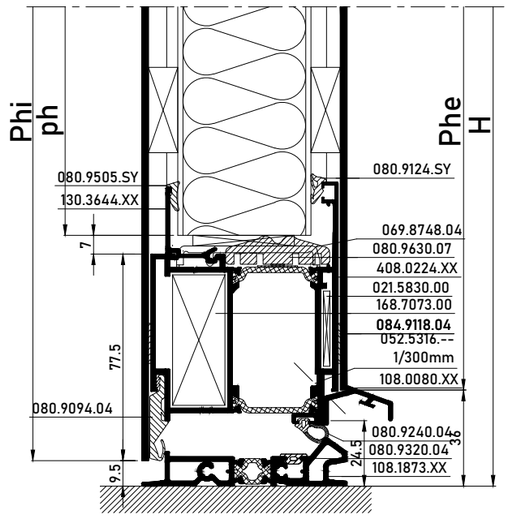

SECTIONS MASTERLINE 8-Fu Panel Door

MAGNETUDE PANEL DOOR DOUBLE SIDED INWARD OPENING WITH AUTOMATIC DRAUGHT EXCLUDER

MASTERLINE 8-Fu

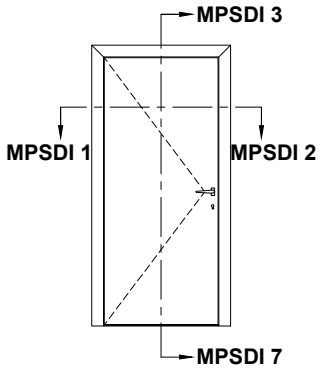

INT.	Pbi = B - 97
	Phi = H - 58
EXT.	Pbe = B - 149
	Phe=H - 84
IN.	pb = B - 266
	ph = H - 227

			#	Lm
408.0898.XX			1	B
			1	H
			1	H
408.0224.XX			2	B - 127
			2	H - 88
030.3644.XX			2	B - 252
			2	H - 263

		#
168.7071.00		2
168.8072.00		2
168.7073.00		4
021.5830.00		4
069.8748.04		4
169.8513.04		1
052.5316.--		4
169.8510.04		1
069.8426.04		2
052.5316.--		4
081.9236.04		4 x (60.5mm)
080.9505.SY		(2xB)+(2xH)
080.9124.SY		(2xB)+(2xH)
080.9078.04		(1xB)+(2xH)
080.9630.07		(2xB) + (2xH)
081.9040.--		19H.F. ...
080.9094.04		(1xB)+(2xH)
084.9118.04		(4xH) + (4xB)

MPSDI 7

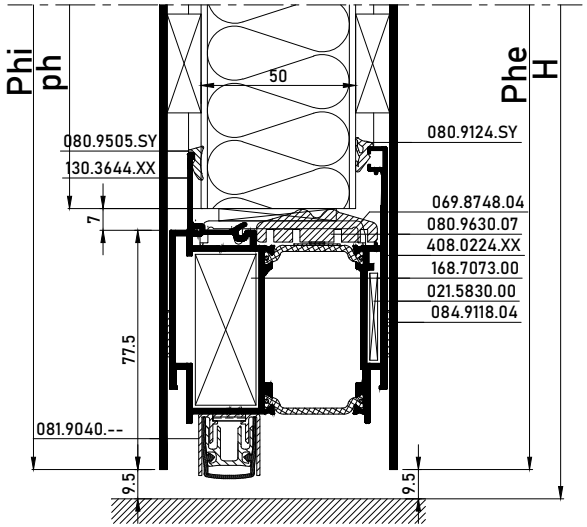

BESLAG DEUREN > ZIE "OPENING DOORS"
ACCESSOIRES PORTES > VOIRE "OPENING DOORS"
DOORS GEAR > SEE "OPENING DOORS"
TUERENBESCHLAG > SIEHE "OPENING DOORS"

MAGNETISCH PANEEL INFO
INFO PANNEAU MAGNÉTIQUE
MAGNETIC PANEL INFO
MAGNETISCHE PANEL INFORMATIONEN
WWW.HARINCK.BE

SECTIONS MASTERLINE 8-Fu Panel Door

MAGNETUDE Z-T PANEL DOOR DOUBLE SIDED INWARD OPENING WITH AUTOMATIC DRAUGHT EXCLUDER

MASTERLINE 8-Fu

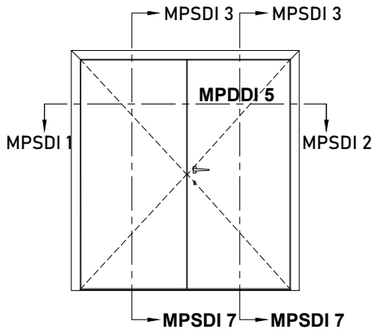

MPDDI 5

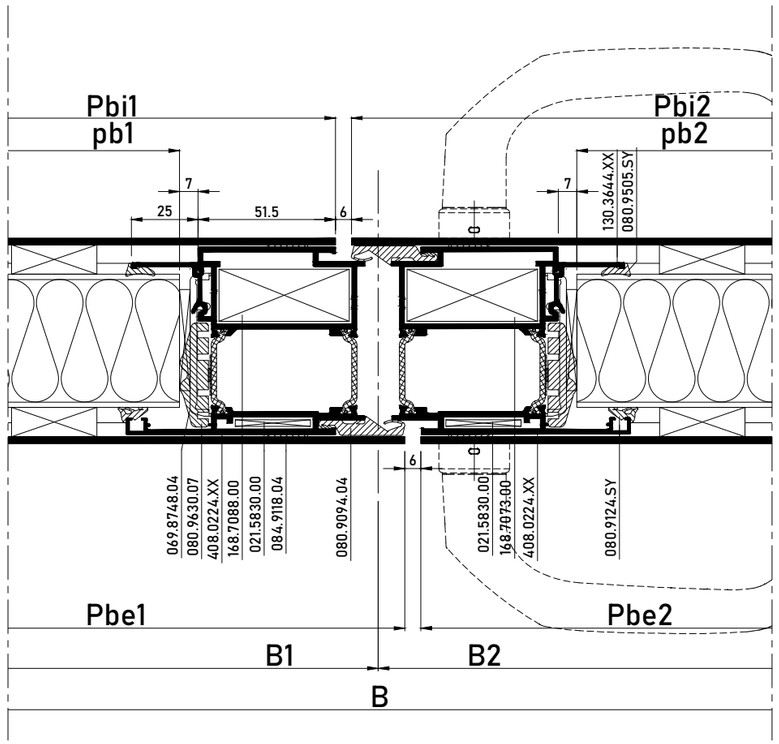

INT. B1	Pbi1 = B1-64.5 Phi = H-58
INT. B2	Pbi2 = B2-38.5 Phi = H-58
EXT. B1	Pbe1 = B1-64.5 Phe = H-84
EXT. B2	Pbe2 = B2-90.5 Phe = H-84
IN. b1	pb1=B1 - 207.5 ph = H - 227
IN. b2	pb2=B2 - 207.5 ph = H - 227

	#	Lm
408.0898.XX	1	B
	1	H
	1	H
408.0224.XX	2	B1 - 68.5
	2	B2 - 68.5
	4	H - 88.2
130.3644.XX	2	B1 - 193.5
	2	B2 - 193.5
	4	H - 263

BESLAG DEUREN > ZIE "OPENING DOORS"
ACCESSOIRES PORTES > VOIRE "OPENING DOORS"
DOORS GEAR > SEE "OPENING DOORS"
TUERENBESCHLAG > SIEHE "OPENING DOORS"

MAGNETISCH PANEEL INFO
INFO PANNEAU MAGNÉTIQUE
MAGNETIC PANEL INFO
MAGNETISCHE PANEL INFORMATIONEN
WWW.HARINCK.BE

	#
168.7071.00	2
168.8072.00	2
168.7073.00	6
168.7088.00	2
021.5830.00	8
069.8748.04	8
169.8513.04	1
052.5316.--	4
169.8510.04	2
069.8426.04	4
052.5316.--	8
081.9236.04	6 x (60.5mm)
169.8522.04	2
080.9505.SY	(2xB1)+(2xB2) 4H
080.9124.SY	(2xB1)+(2xB2) 4H
080.9078.04	(1xB)+(2xH)
080.9094.04	B1+B2 4xH
081.9040.--	19H.F. ...
080.9630.07	(2xB1)+(2xB2) 4xH
084.9118.04	(8xH) + (8xB)

MPSDI 7

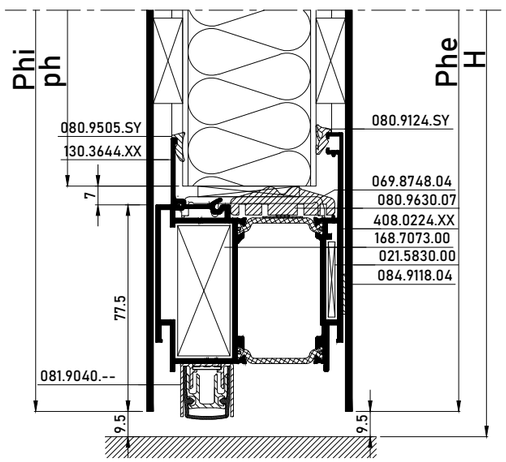

SECTIONS MASTERLINE 8-Fu Panel Door

MAGNETUDE PANEL DOOR DOUBLE SIDED INWARD OPENING WITH BRUSH

MASTERLINE 8-Fu

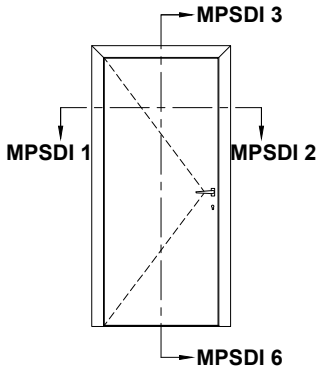

MPSSI 6

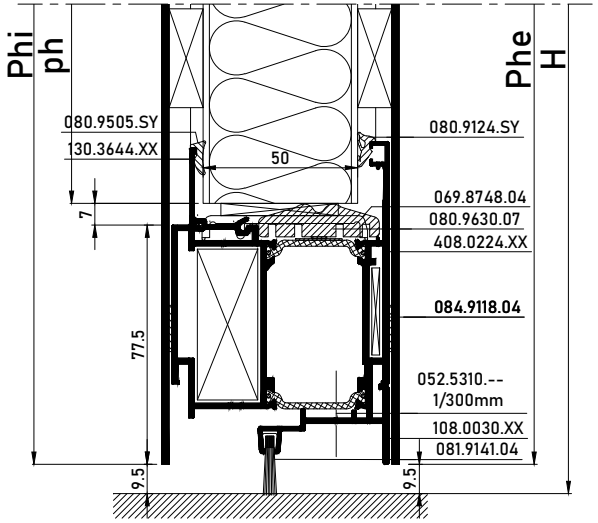

INT.	Pbi = B - 97 Phi = H - 58
EXT.	Pbe = B - 149 Phe=H - 84
IN.	pb = B - 266 ph = H - 227

		#	Lm
408.0898.XX		1	B
		1	H
		1	H
408.0224.XX		2	B - 127
		2	H - 88
030.3644.XX		2	B - 252
		2	H - 263
108.0030.XX		1	B - 139

	#
168.7071.00	2
168.8072.00	2
168.7073.00	4
021.5830.00	4
069.8748.04	4
169.8513.04	1
052.5316.--	4
069.8426.04	2
052.5316.--	4
081.9236.04	4 x (60.5mm)
081.9092.04	2 x (60.5mm)
081.9141.04	19H.F. ...
052.5310.--	1/300mm
080.9505.SY	(2xB)+(2xH)
080.9124.SY	(2xB)+(2xH)
080.9078.04	(1xB)+(2xH)
080.9094.04	(2xB)+(2xH)
080.9630.07	(2xB) + (2xH)
084.9118.04	(4xH) + (4xB)

BESLAG DEUREN > ZIE "OPENING DOORS"
ACCESSOIRES PORTES > VOIRE "OPENING DOORS"
DOORS GEAR > SEE "OPENING DOORS"
TUERENBESCHLAG > SIEHE "OPENING DOORS"

MAGNETISCH PANEEL INFO
INFO PANNEAU MAGNÉTIQUE
MAGNETIC PANEL INFO
MAGNETISCHE PANEL INFORMATIONEN
WWW.HARINCK.BE

SECTIONS MASTERLINE 8-Fu Panel Door

MAGNETUDE Z-T PANEL DOOR DOUBLE SIDED INWARD OPENING WITH BRUSH

MASTERLINE 8-Fu

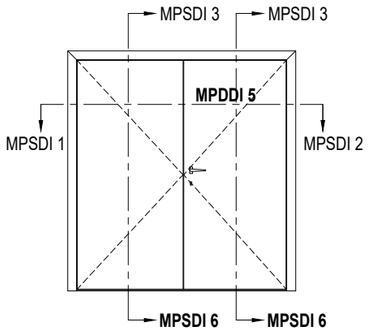

INT. B1	Pbi1 = B1-64.5	Phi = H-58
INT. B2	Pbi2 = B2-38.5	Phi = H-58
EXT. B1	Pbe1 = B1-64.5	Phe = H-84
EXT. B2	Pbe2 = B2-90.5	Phe = H-84
IN. b1	pb1=B1 - 207.5	ph = H - 227
IN. b2	pb2=B2 - 207.5	ph = H - 227

		#	Lm
408.0898.XX		1	B
		1	H
		1	H
408.0224.XX		2	B1 - 68.5
		2	B2 - 68.5
		4	H - 88.2
108.0030.XX		1	B1-77.5
		1	B2-80.5
130.3644.XX		2	B1 - 193.5
		2	B2 - 193.5
		4	H - 263

BESLAG DEUREN > ZIE "OPENING DOORS"
ACCESSOIRES PORTES > VOIRE "OPENING DOORS"
DOORS GEAR > SEE "OPENING DOORS"
TUERENBESCHLAG > SIEHE "OPENING DOORS"

MAGNETISCH PANEEL INFO
INFO PANNEAU MAGNÉTIQUE
MAGNETIC PANEL INFO
MAGNETISCHE PANEL INFORMATIONEN
WWW.HARINCK.BE

168.7071.00	2
168.8072.00	2
168.7073.00	6
168.7088.00	2
021.5830.00	8
069.8748.04	8
169.8513.04	1
052.5316.--	4
069.8426.04	4
052.5316.--	8
081.9236.04	6 x (60.5mm)
081.9092.04	2 x (60.5mm)
081.9141.04	19H.F. ...
169.8522.04	2
080.9505.SY	(2xB1)+(2xB2)
	4H
080.9124.SY	(2xB1)+(2xB2)
	4H
080.9078.04	(1xB)+(2xH)
080.9094.04	(1xB1)+(1B2)
	(4xH)
080.9630.07	(2xB1)+(2xB2)
	4xH
052.5310.--	1/300mm
084.9118.04	(8xH) + (8xB)

MPDDI 5

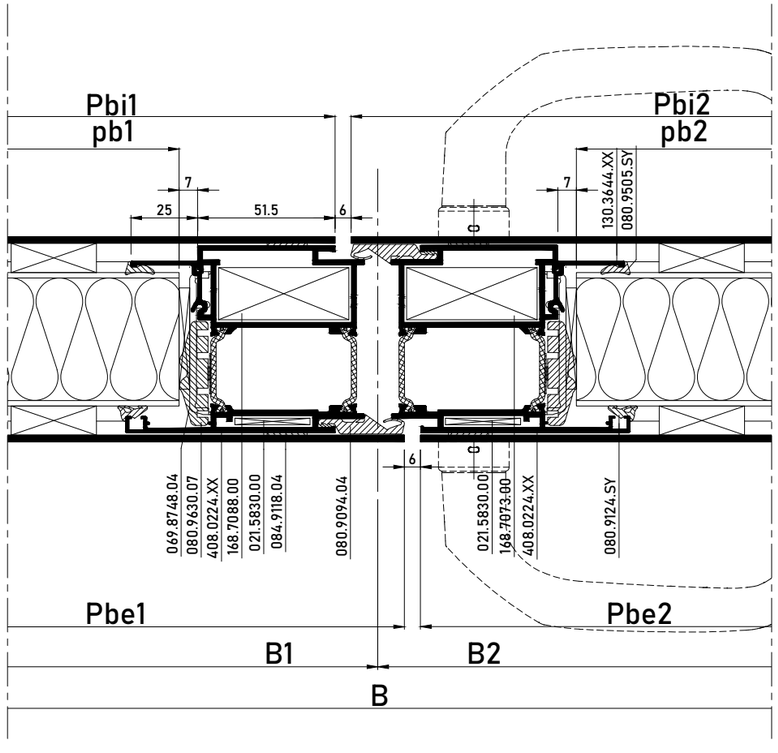

MPSDI 6

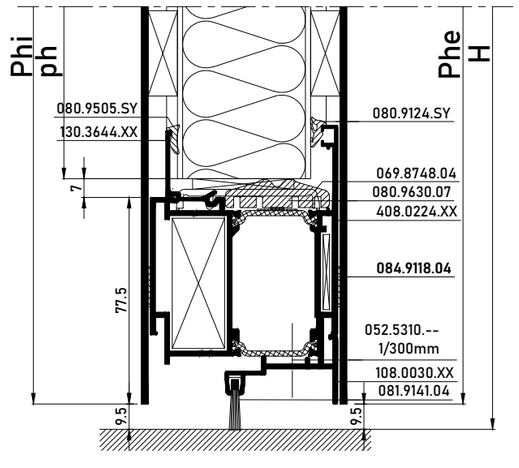

SECTIONS MASTERLINE 8-Fu Panel Door

MAGNETUDE PANEL DOOR ST -> HI

MASTERLINE 8-Fu

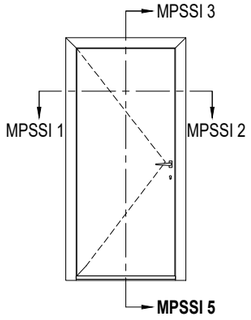

			#	Lm
408.0898.XX			1	B
			1	H
			1	H
408.0226.XX			2	B - 97
			2	H - 58
030.3608.XX			2	B - 252
			2	H - 263
108.0080.XX			1	B - 133
108.1873.XX			1	B - 143

INT.	Pbi = B - 264
	Phi = H - 225
EXT.	Pbe = B - 149
	Phe = H - 110.5

BESLAG DEUREN > ZIE "OPENING DOORS"
ACCESSOIRES PORTES > VOIRE "OPENING DOORS"
DOORS GEAR > SEE "OPENING DOORS"
TUERENBESCHLAG > SIEHE "OPENING DOORS"

MAGNETISCH PANEEL INFO
INFO PANNEAU MAGNÉTIQUE
MAGNETIC PANEL INFO
MAGNETISCHE PANEL INFORMATIONEN
WWW.HARINCK.BE

	#
168.7071.00	2
168.8072.00	2
168.7073.00	4
021.5830.00	4
069.8757.04	4
069.8360.04	1
052.5313.--	4
052.5316.--	4
069.8426.04	2
052.5316.--	4
069.8427.04	2
069.8373.04	1
080.9078.04	(3xB)+(4xH)
080.9126.SY	(2xb)+(2xh)
180.9114.SY	(2xb)+(2xh)
052.5316.--	1/300mm
080.9320.04	B
080.9240.04	19H.F. ...
084.9118.04	(2xH) + (2xB)
+	
080.9630.07	(2xB) + (2xH)

MPSSI 1

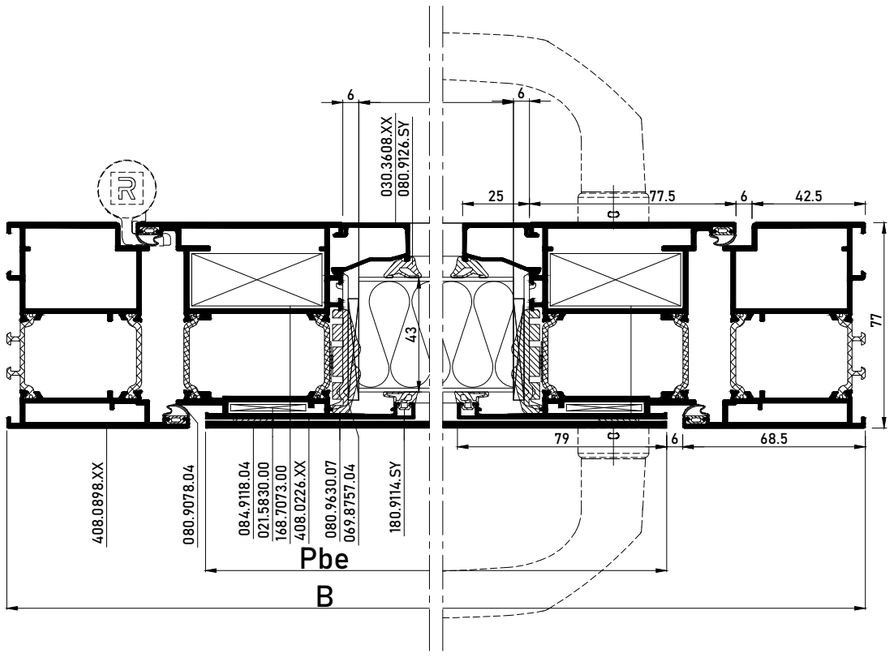

MPSSI 2

MPSSI 3

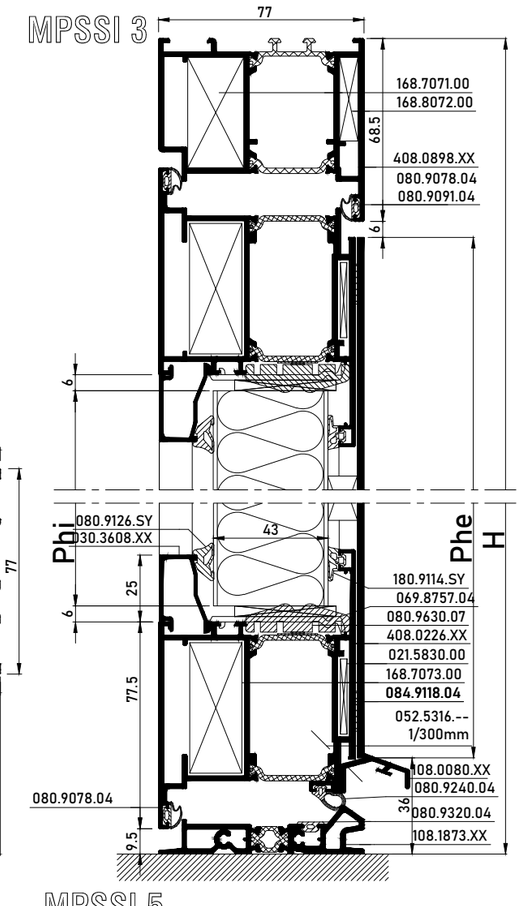

MPSSI 5

SECTIONS MASTERLINE 8-Fu Panel Door

MAGNETUDE PANEL DOOR HI -> HI+

MASTERLINE 8-Fu

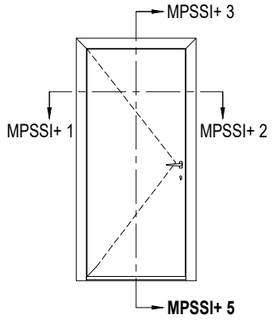

INT.	Pbi = B - 264
	Phi = H - 225
EXT.	Pbe = B - 149
	Phe = H - 110.5

		#	Lm
030.3608.XX		2	B - 252
		2	H - 263
108.0080.XX		1	B - 133
108.1873.XX		1	B - 143
408.0898.XX		1	B
		1	H
		1	H
+			
087.9870.07		1	B
		1	H
		1	H
408.0226.XX		2	B - 97
		2	H - 58
+			
087.9874.07		2	B-97
		2	H-58

BESLAG DEUREN > ZIE "OPENING DOORS"
ACCESSOIRES PORTES > VOIRE "OPENING DOORS"
DOORS GEAR > SEE "OPENING DOORS"
TUERENBESCHLAG > SIEHE "OPENING DOORS"

MAGNETISCH PANEEL INFO
INFO PANNEAU MAGNÉTIQUE
MAGNETIC PANEL INFO
MAGNETISCHE PANEL INFORMATIONEN
WWW.HARINCK.BE

	#
168.7071.00	2
168.8072.00	2
168.7073.00	4
021.5830.00	4
069.8757.04	4
069.8360.04	1
052.5313.--	4
052.5316.--	4
069.8426.04	2
052.5316.--	4
069.8427.04	2
069.8373.04	1
080.9078.04	(3xB)+(4xH)
080.9126.SY	(2xb)+(2xh)
180.9114.SY	(2xb)+(2xh)
052.5316.--	1/300mm
080.9320.04	B
080.9240.04	19H.F. ...
080.9630.07	(2xB) + (2xH)
084.9118.04	(2xH) + (2xB)
+	
087.9940.04	(2xB)
	(2xH)
087.9941.04	B
	(2xH)

MPSSI 1

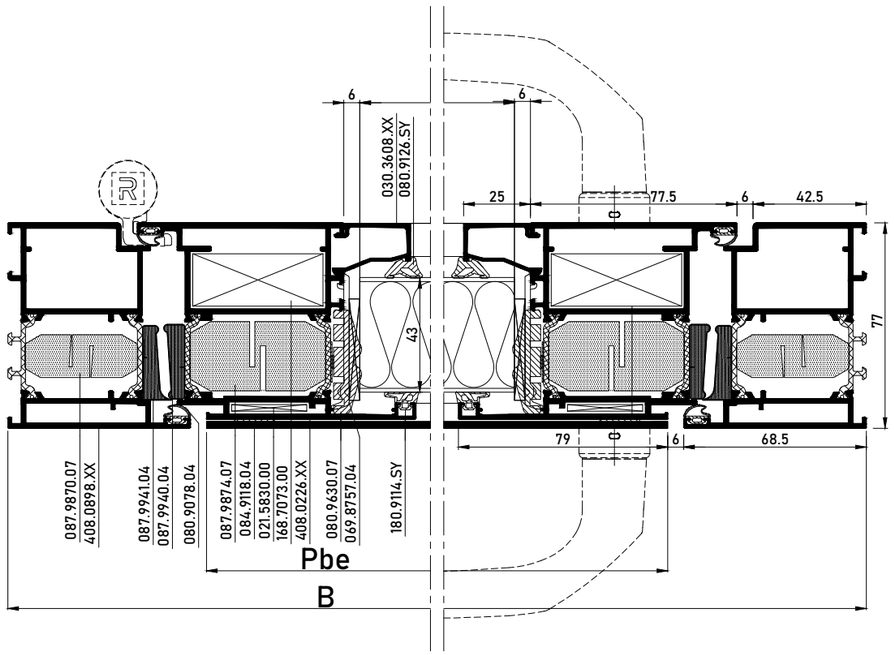

MPSSI 2

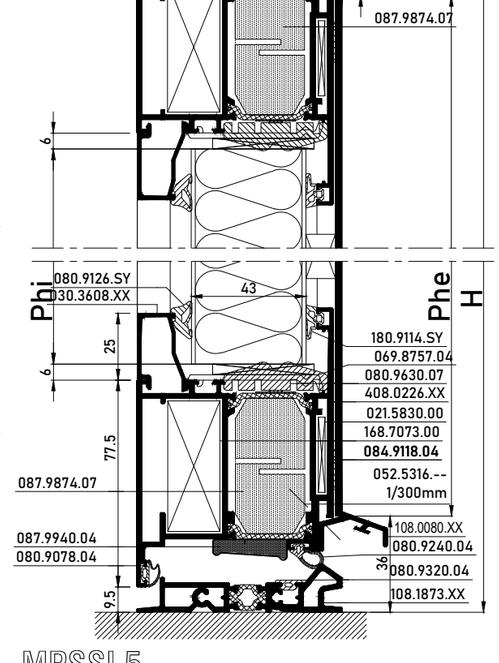

SECTIONS MASTERLINE 8-Fu Panel Door

MAGNETUDE PANEL DOOR OUTW. OPENING WITH DOUBLE WEATHER STRIP

MASTERLINE 8-Fu

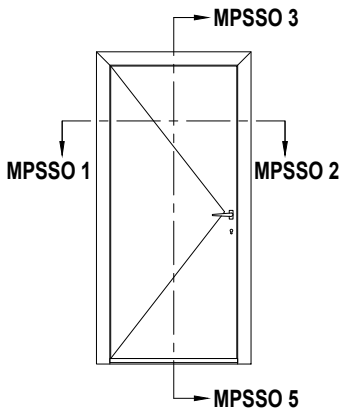

			#	Lm
408.0869.XX			1	B
			1	H
			1	H
408.0214.XX			2	B-127
			2	H-88
030.3612.XX			2	B-252
			2	H-263
108.1874.XX			1	B - 143
108.0081.XX			1	B - 127

INT.	Pbi = B - 264
	Phi = H - 225
EXT.	Pbe = B - 97
	Phe = H - 58

		#
168.7071.00		2
168.8072.00		2
168.7073.00		4
021.5830.00		4
069.8757.04		4
069.8426.04		2
069.8427.04		2
052.5316.--		4
069.8360.04		1
052.5313.--		4
052.5316.--		4
052.5327.--		1/300mm
080.9078.04		(1xB)+(2xH)
080.9125.SY		(2xb)+(2xh)
080.9320.04		B
080.9240.04		19H.F. ...
080.9094.04		(2xB)+(2xH)
080.9630.07		(2xB) + (2xH)
084.9118.04		(2xH) + (2xB)

BESLAG DEUREN > ZIE "OPENING DOORS"
ACCESSOIRES PORTES > VOIRE "OPENING DOORS"
DOORS GEAR > SEE "OPENING DOORS"
TUERENBESCHLAG > SIEHE "OPENING DOORS"

MAGNETISCH PANEEL INFO
INFO PANNEAU MAGNÉTIQUE
MAGNETIC PANEL INFO
MAGNETISCHE PANEL INFORMATIONEN
WWW.HARINCK.BE

MPSSO 1

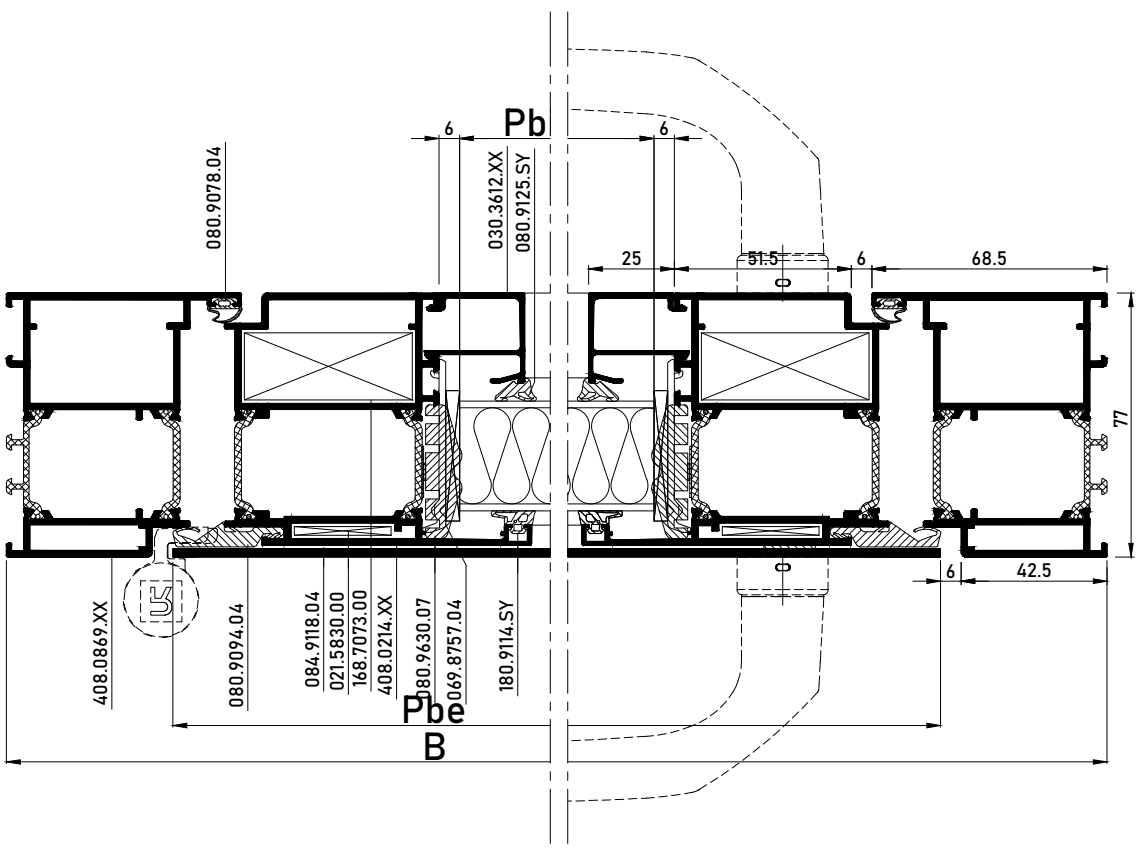

MPSSO 2

MPSSO 3

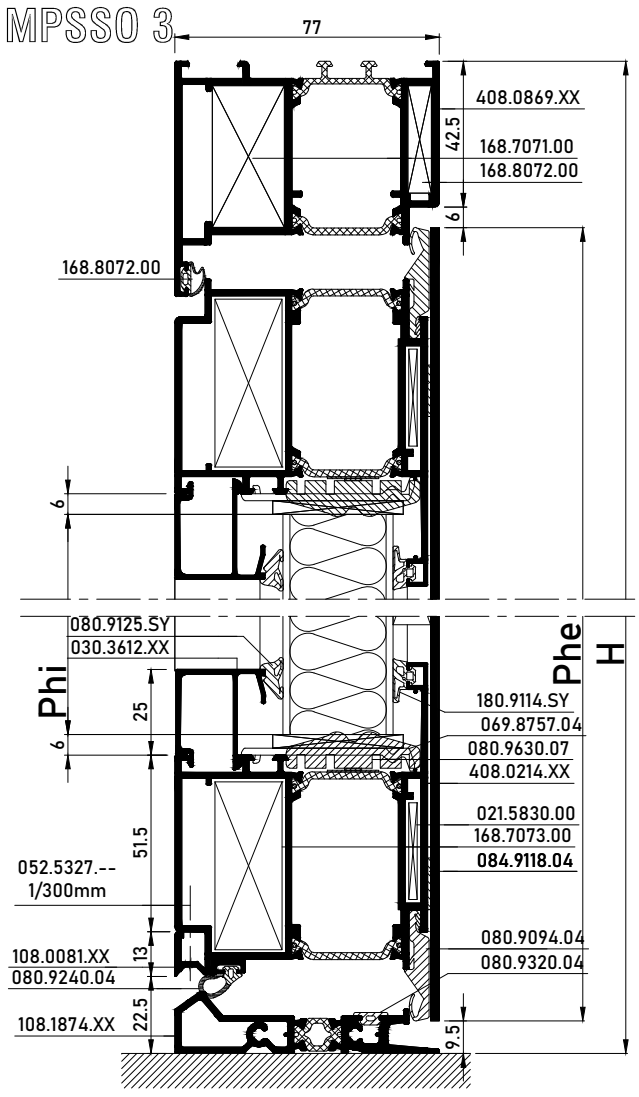

MPSSO 5

SECTIONS MASTERLINE 8-Fu Panel Door

MAGNETUDE Z-T PANEL DOOR OUTWARD OPENING WITH THRESHOLD

MASTERLINE 8-Fu

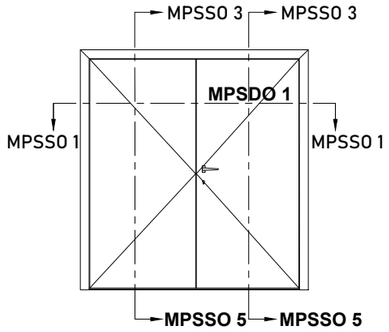

INT. B1	b1 = B1 - 205.5 h = H - 225
INT. B2	b2 = B2 - 205.5 h = H - 225
EXT. B1	Pb1 = B1 - 64.5 Ph = H - 58
EXT. B2	Pb2 = B2 - 38.5 Ph = H - 58

	#	Lm
408.0869.XX	1	B
	1	H
	1	H
408.0214.XX	2	B1 - 58.5
	2	B2 - 68.5
	3	H - 88
408.0226.XX	1	H - 58
030.3608.XX	2	B1 - 193.5
	2	B2 - 193.5
	4	H - 263
108.1874.XX	1	B - 143
108.0081.XX	1	B1 - 74.5
	1	B2 - 56.5

	#
168.7071.00	2
168.8072.00	2
168.7073.00	6
021.5830.00	8
168.7088.00	2
069.8757.04	8
052.5327.--	1/300mm
069.8360.04	1
052.5313.--	4
052.5316.--	4
069.8426.04	4
069.8427.04	4
052.5316.--	8
069.8511.04	1
069.8512.04	1
169.8522.04	2
081.9236.04	2 x (60.5mm)
080.9078.04	(1xB)+(3xH)
080.9094.04	(2xB)+(3xH)
080.9240.04	B
080.9320.04	B
080.9126.SY	(2xb1)+(2xb2) 4xh
080.9630.07	(2xB1)+(2xB2) 4xH
084.9118.04	(4xH) + (4xB)

BESLAG DEUREN > ZIE "OPENING DOORS"
ACCESSOIRES PORTES > VOIRE "OPENING DOORS"
DOORS GEAR > SEE "OPENING DOORS"
TUERENBESCHLAG > SIEHE "OPENING DOORS"

MAGNETISCH PANEEL INFO
INFO PANNEAU MAGNÉTIQUE
MAGNETIC PANEL INFO
MAGNETISCHE PANEL INFORMATIONEN
WWW.HARINCK.BE

MPSDO 1

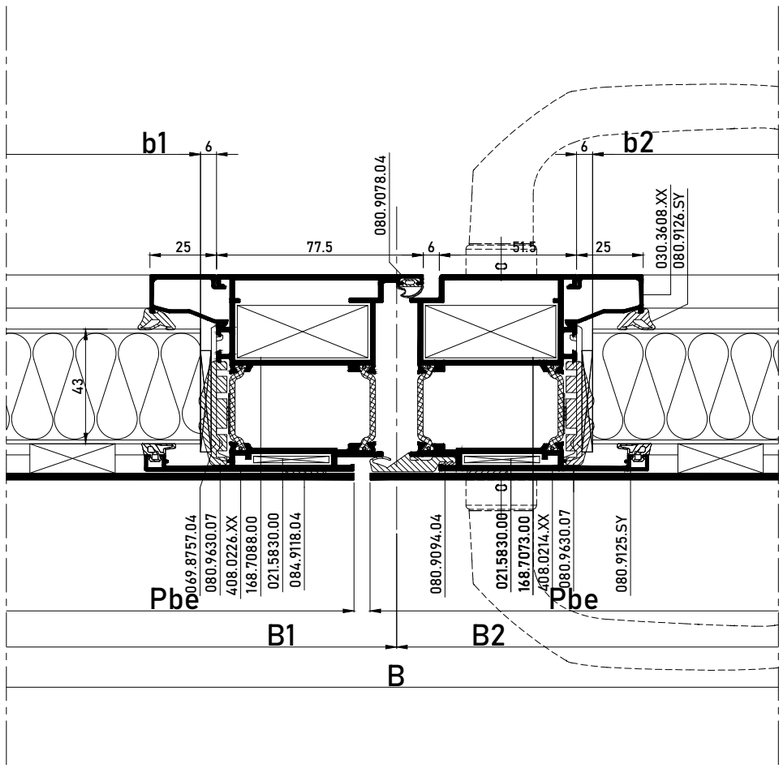

MPSSO 5

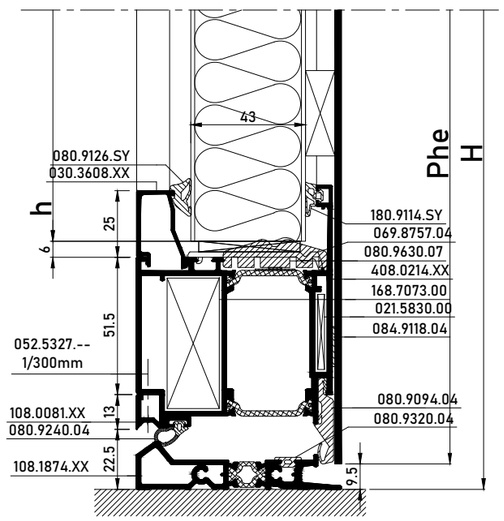

SECTIONS MASTERLINE 8-Fu Panel Door

MAGNETUDE PANEL DOOR OUTWARD OPENING WITH DOOR LATCH

MASTERLINE 8-Fu

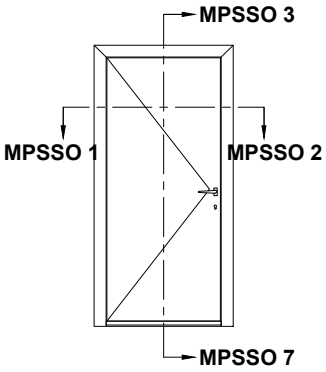

INT.	Pbi = B - 264
	Phi = H - 225
EXT.	Pbe = B - 97
	Phe = H - 58

			#	Lm
408.0869.XX			1	B
			1	H
			1	H
408.0214.XX			2	B-127
			2	H-88
030.3612.XX			2	B-252
			2	H-263
108.0082.XX			1	B - 139

		#
168.7071.00		2
168.8072.00		2
168.7073.00		4
021.5830.00		4
069.8757.04		4
169.8513.04		1
052.5316.--		4
169.8510.04		1
069.8426.04		2
052.5316.--		4
081.9092.04		2 x (60.5mm)
081.9236.04		2 x (60.5mm)
080.9078.04		(1xB)+(2xH)
080.9126.SY		(2xb)+(2xh)
081.9040.--		19H.F. ...
080.9094.04		(1xB)+(2xH)
080.9630.07		(2xB) + (2xH)
084.9118.04		(2xH) + (2xB)
052.5327.--		1/300mm

MPSSO 7

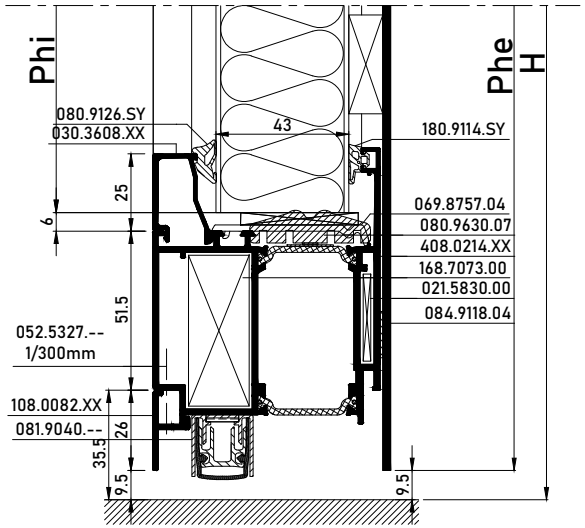

BESLAG DEUREN > ZIE "OPENING DOORS"
ACCESSOIRES PORTES > VOIRE "OPENING DOORS"
DOORS GEAR > SEE "OPENING DOORS"
TUERENBESCHLAG > SIEHE "OPENING DOORS"

MAGNETISCH PANEEL INFO
INFO PANNEAU MAGNÉTIQUE
MAGNETIC PANEL INFO
MAGNETISCHE PANEL INFORMATIONEN
WWW.HARINCK.BE

SECTIONS MASTERLINE 8-Fu Panel Door

MAGNETUDE Z-T PANEL DOOR OUTWARD OPENING WITH AUTOMATIC DRAUGHT EXCLUDER

MASTERLINE 8-Fu

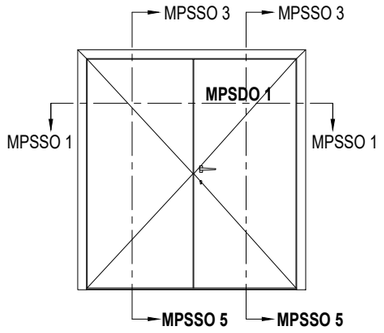

INT. B1	b1 = B1 - 205.5	h = H - 225
INT. B2	b2 = B2 - 205.5	h = H - 225
EXT. B1	Pb1 = B1 - 64.5	Ph = H - 58
EXT. B2	Pb2 = B2 - 38.5	Ph = H - 58

	#	Lm
408.0869.XX	1	B
	1	H
	1	H
408.0214.XX	2	B1 - 68.5
	2	B2 - 68.5
	3	H - 88
408.0226.XX	1	H - 58
030.3608.XX	2	B1 - 193.5
	2	B2 - 193.5
	4	H - 263
108.0082.XX	1	B1 - 59.5
	1	B2 - 80.5

	#
168.7071.00	2
168.8072.00	2
168.7073.00	6
021.5830.00	8
168.7088.00	2
069.8757.04	8
169.8513.04	1
052.5316.--	4
169.8510.04	2
069.8426.04	4
052.5316.--	8
081.9236.04	6 x (60.5mm)
069.8511.04	1
069.8512.04	1
169.8522.04	2
080.9078.04	(1xB)+(3xH)
080.9094.04	(1xB)+(3xH)
080.9126.SY	(2xb1)+(2xb2) +(4xh)
080.9630.07	(2xB1)+(2xB2) 4xH
084.9118.04	(4xH) + (4xB)
052.5327.--	1/300mm
081.9040.--	19H.F. ...

MPSDO 1

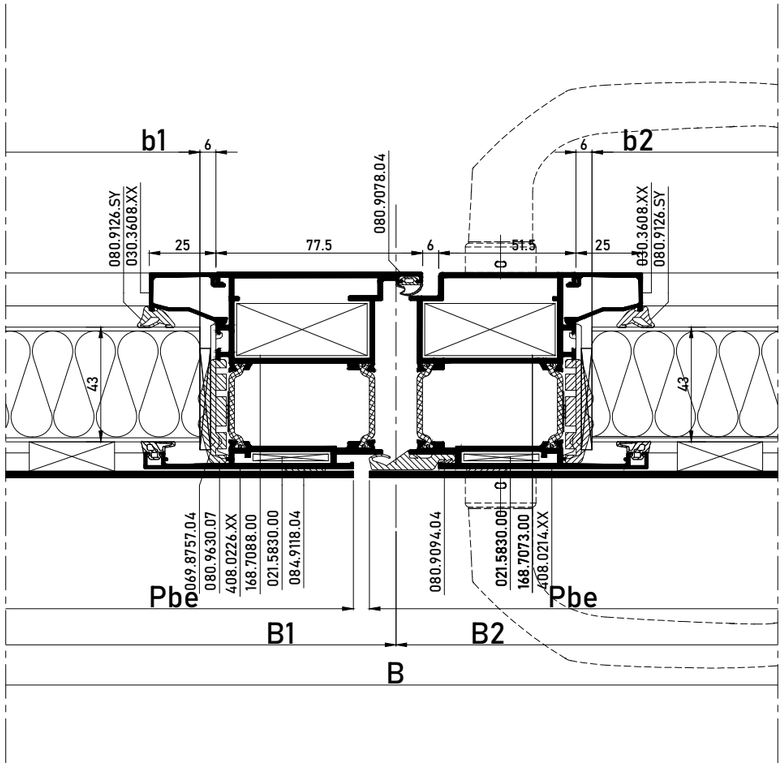

BESLAG DEUREN > ZIE "OPENING DOORS"
ACCESSOIRES PORTES > VOIRE "OPENING DOORS"
DOORS GEAR > SEE "OPENING DOORS"
TUERENBESCHLAG > SIEHE "OPENING DOORS"

MAGNETISCH PANEEL INFO
INFO PANNEAU MAGNÉTIQUE
MAGNETIC PANEL INFO
MAGNETISCHE PANEL INFORMATIONEN
WWW.HARINCK.BE

MPSDO 5

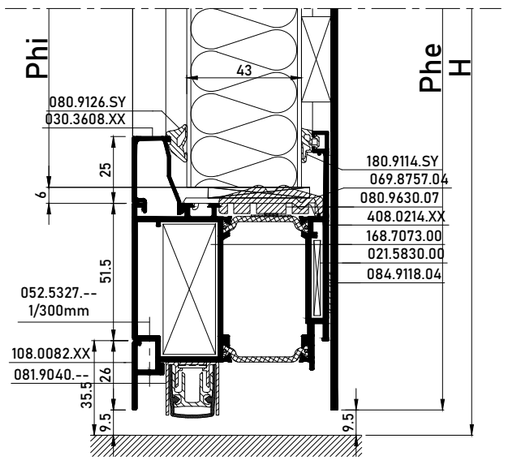

SECTIONS MASTERLINE 8-Fu Panel Door

MAGNETUDE PANEL DOOR OUTWARD OPENING WITH BRUSH

MASTERLINE 8-Fu

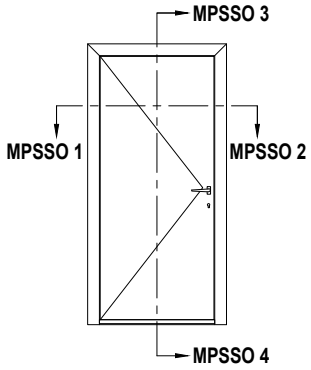

INT.	Pbi = B - 264
	Phi = H - 225
EXT.	Pbe = B - 97
	Phe = H - 58

		#	Lm
408.0869.XX		1	B
		1	H
		1	H
408.0214.XX		2	B-127
		2	H-88
030.3608.XX		2	B-252
		2	H-263
108.0030.XX		1	B - 139

		#
168.7071.00		2
168.8072.00		2
168.7073.00		4
021.5830.00		4
069.8757.04		4
169.8513.04		1
052.5316.--		2
069.8426.04		2
052.5316.--		4
081.9236.04		4 x (60.5mm)
081.9092.04		2 x (60.5mm)
081.9141.04		19H.F. ...
052.5315.--		1/300mm
080.9078.04		(1xB)+(2xH)
080.9126.SY		(2xb)+(2xh)
080.9094.04		(2xB)+(2xH)
080.9630.07		(2xB) + (2xH)
084.9118.04		(2xH) + (2xB)

MPSSO 4

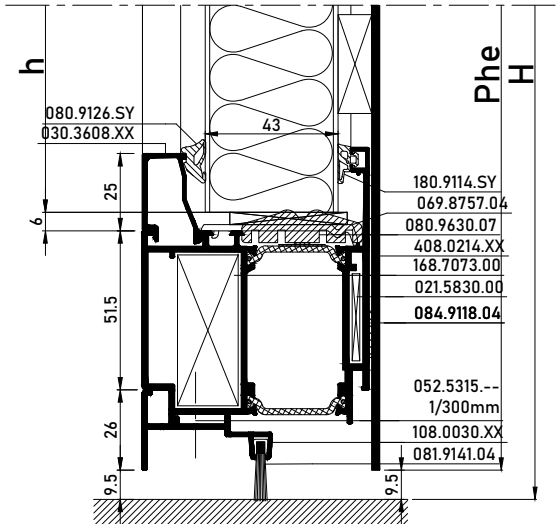

BESLAG DEUREN > ZIE "OPENING DOORS"
ACCESSOIRES PORTES > VOIRE "OPENING DOORS"
DOORS GEAR > SEE "OPENING DOORS"
TUERENBESCHLAG > SIEHE "OPENING DOORS"

MAGNETISCH PANEEL INFO
INFO PANNEAU MAGNÉTIQUE
MAGNETIC PANEL INFO
MAGNETISCHE PANEL INFORMATIONEN
WWW.HARINCK.BE

SECTIONS MASTERLINE 8-Fu Panel Door

MAGNETUDE Z-T PANEL DOOR OUTWARD OPENING WITH BRUSH

MASTERLINE 8-Fu

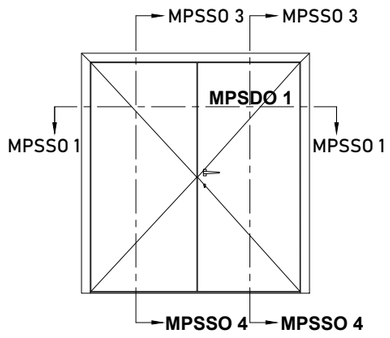

INT. B1	b1 = B1 - 205.5 h = H - 225
INT. B2	b2 = B2 - 205.5 h = H - 225
EXT. B1	Pb1 = B1 - 64.5 Ph = H - 58
EXT. B2	Pb2 = B2 - 38.5 Ph = H - 58

	#	Lm
408.0869.XX	1	B
	1	H
	1	H
408.0214.XX	2	B1 - 68.5
	2	B2 - 68.5
	3	H - 88
408.0226.XX	1	H - 58
030.3608.XX	2	B1 - 193.5
	2	B2 - 193.5
	4	H - 263
108.0030.XX	1	B1 - 77.5
	1	B2 - 80.5

	#
168.7071.00	2
168.8072.00	2
168.7073.00	6
021.5830.00	8
168.7088.00	2
069.8757.04	8
169.8513.04	1
052.5316.--	4
069.8426.04	4
052.5316.--	8
081.9236.04	6 x (60.5mm)
081.9092.04	2 x (60.5mm)
081.9141.04	19.F....
069.8511.04	1
069.8512.04	1
169.8522.04	2
080.9078.04	(1xB)+(3xH)
080.9094.04	(1xB)+(3xH)
080.9126.SY	(2xb1)+(2xb2)
	+(4xh)
080.9630.07	(2xB1)+(2xB2)
	4xH
084.9118.04	(4xH) + (4xB)
052.5315.--	1/300mm

BESLAG DEUREN > ZIE "OPENING DOORS"
ACCESSOIRES PORTES > VOIRE "OPENING DOORS"
DOORS GEAR > SEE "OPENING DOORS"
TUERENBESCHLAG > SIEHE "OPENING DOORS"

MAGNETISCH PANEEL INFO
INFO PANNEAU MAGNÉTIQUE
MAGNETIC PANEL INFO
MAGNETISCHE PANEL INFORMATIONEN
WWW.HARINCK.BE

MPSDO 1

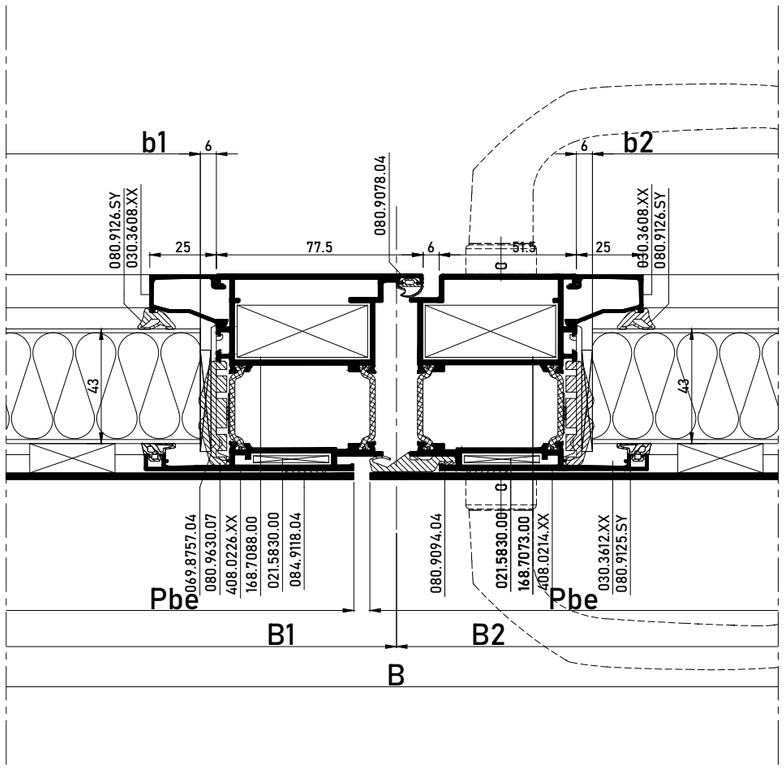

MPSSO 4

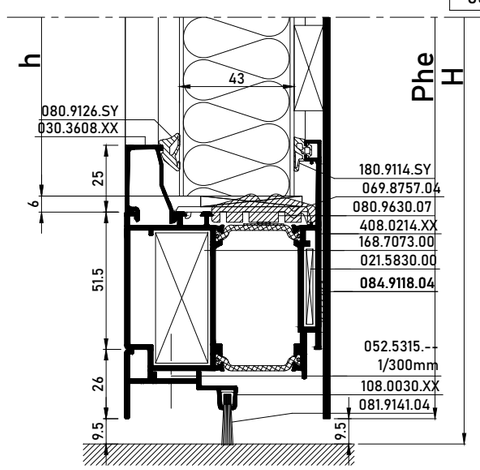

SECTIONS MASTERLINE 8-Fu Panel Door

MAGNETUDE PANEL DOOR DOUBLE SIDED OUTWARD OPENING WITH DOUBLE WEATHER STRIP

MASTERLINE 8-Fu

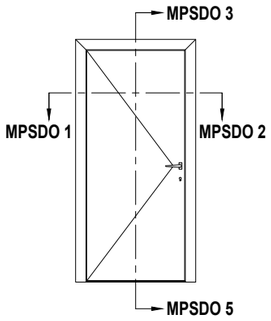

INT.	Pbi = B - 149
	Phi = H - 98
EXT.	Pbe = B - 97
	Phe = H - 58
IN.	pb = B - 266
	ph = H - 227

			#	Lm
408.0869.XX			1	B
			1	H
			1	H
408.0224.XX			2	B - 127
			2	H - 88
108.0090.XX			1	B - 127
108.1874.XX			1	B - 143
030.3644.XX			2	B - 252
			2	H - 263

BESLAG DEUREN > ZIE "OPENING DOORS"
ACCESSOIRES PORTES > VOIRE "OPENING DOORS"
DOORS GEAR > SEE "OPENING DOORS"
TUERENBESCHLAG > SIEHE "OPENING DOORS"

MAGNETISCH PANEEL INFO
INFO PANNEAU MAGNÉTIQUE
MAGNETIC PANEL INFO
MAGNETISCHE PANEL INFORMATIONEN
WWW.HARINCK.BE

		#
168.7071.00		2
168.8072.00		2
168.7073.00		4
021.5830.00		4
069.8748.04		4
069.8360.04		1
052.5313.--		4
052.5316.--		4
069.8426.04		2
069.8427.04		2
052.5316.--		4
069.8427.04		2
080.9505.SY		(2xB)+(2xH)
080.9124.SY		(2xB)+(2xH)
080.9078.04		(1xB)+(2xH)
080.9320.04		B
080.9240.04		19H.F. ...
080.9094.04		(2xB)+(2xH)
080.9630.07		(2xB) + (2xH)
084.9118.04		(4xH) + (4xB)
052.5327.--		1/300mm

MPSDO 1

MPSDO 2

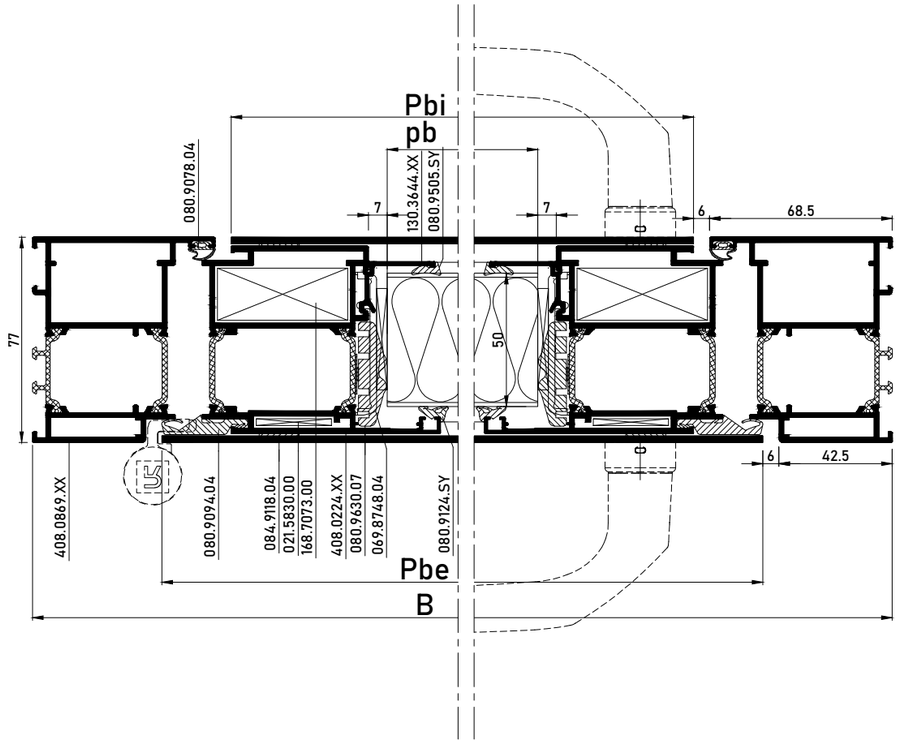

MPSDO 3

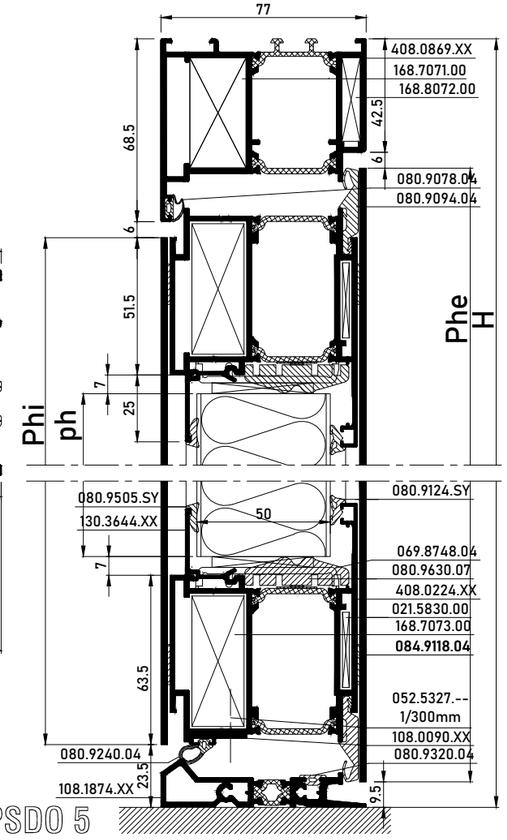

MPSDO 5

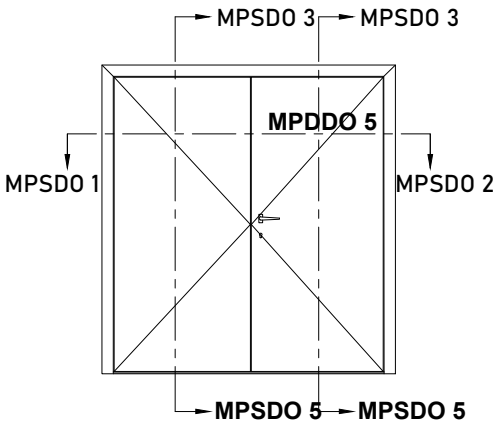

INT. B1	Pbi1 = B1- 64.5 Phi = H - 58	408.0869.XX			1 1 1	B H H	168.7071.00 168.8072.00 168.7073.00	2 2 6
INT. B2	Pbi2 = B2 -90.5 Phi = H - 58	408.0214.XX			2 2 3	B1 - 68.5 B2 - 68.5 H - 88	021.5830.00 168.7088.00 069.8748.04	8 2 8
EXT. B1	Pbe1 = B1-64.5 Phe = H - 110.5	030.3644.XX			2 2 4	B1 - 193.5 B2 - 193.5 H - 263	069.8360.04 052.5313.-- 052.5316.--	1 4 4
EXT. B2	Pbe2 = B2-38.5 Phe = H-58	108.0090.XX			1 1	B1 - 74.5 B2 - 74.5	069.8426.04 069.8427.04	4 4
IN. b1	pb1=B1 - 207.5 ph = H - 227	108.1874.XX			1	B - 143	052.5316.-- 169.8522.04 081.9236.04 080.9078.04 080.9094.04 080.9240.04 080.9320.04 080.9505.XX 080.9124.SY 080.9630.07 084.9118.04 052.5327.--	8 2 2 x (60.5mm) (1xB)+(2xH) (2xB)+(3xH) (1xB) (1xB) (2xb1)+(2xb2) +(4xh) (2xb1)+(2xb2) +(4xh) (2xB1)+(2xB2) 4xH (8xH) + (8xB) 1/300mm
IN. b2	pb2=B2 - 207.5 ph = H - 227							

IN. b2 pb2=B2 - 207.5 / ph = H - 227

BESLAG DEUREN > ZIE "OPENING DOORS"
ACCESSOIRES PORTES > VOIRE "OPENING DOORS"
DOORS GEAR > SEE "OPENING DOORS"
TUERENBESCHLAG > SIEHE "OPENING DOORS"

MAGNETISCH PANEEL INFO
INFO PANNEAU MAGNÉTIQUE
MAGNETIC PANEL INFO
MAGNETISCHE PANEL INFORMATIONEN
WWW.HARINCK.BE

MPDDO 5

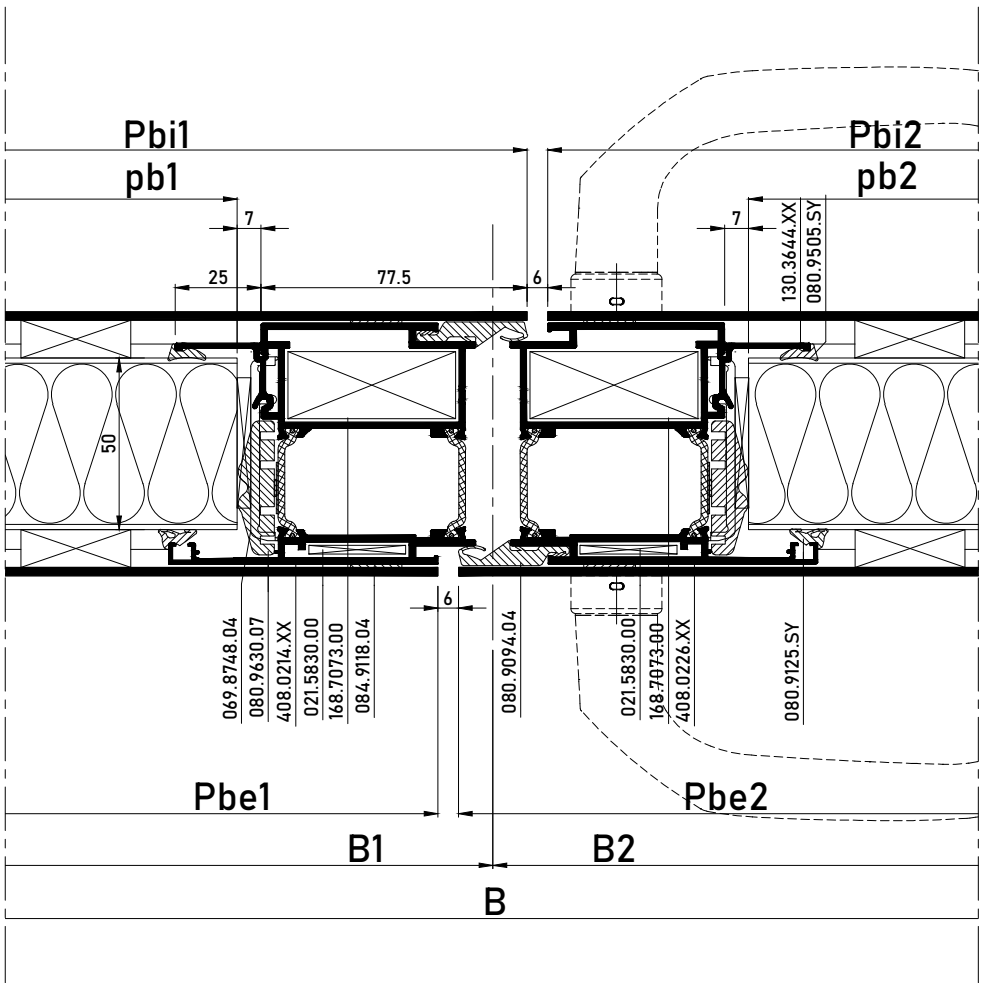

MPSDO 5

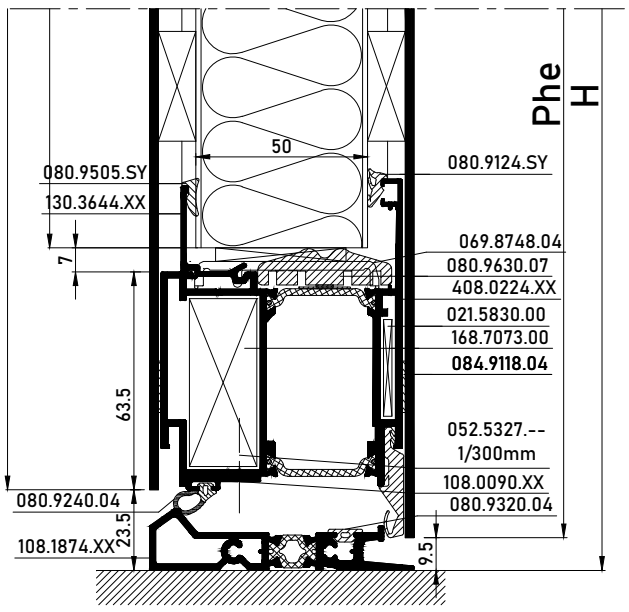

SECTIONS MASTERLINE 8-Fu Panel Door

MAGNETUDE PANEL DOOR DOUBLE SIDED OUTWARD OPENING WITH AUTOMATIC DRAUGHT EXCLUDER

MASTERLINE 8-Fu

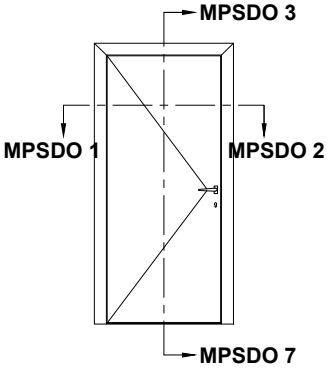

INT.	Pbi = B - 149
	Phi = H - 84
EXT.	Pbe = B - 97
	Phe = H - 58
IN.	pb = B - 266
	ph = H - 227

			#	Lm
408.0869.XX			1	B
			1	H
			1	H
408.0224.XX			2	B - 127
			2	H - 88
030.3644.XX			2	B - 252
			2	H - 263

		#
168.7071.00		2
168.8072.00		2
168.7073.00		4
021.5830.00		4
069.8748.04		4
169.8513.04		1
052.5316.--		4
169.8510.04		1
069.8426.04		2
052.5316.--		4
081.9236.04		4 x (60.5mm)
081.9092.04		1 x (60.5mm)
080.9078.04		(1xB)+(2xH)
069.8427.04		2
069.8373.04		1
080.9505.SY		(2xB)+(2xH)
080.9124.SY		(2xB)+(2xH)
080.9094.04		(1xB)+(2xH)
080.9630.07		(2xB) + (2xH)
081.9040.--		19H.F. ...
084.9118.04		(4xH) + (4xB)

MPSDO 7

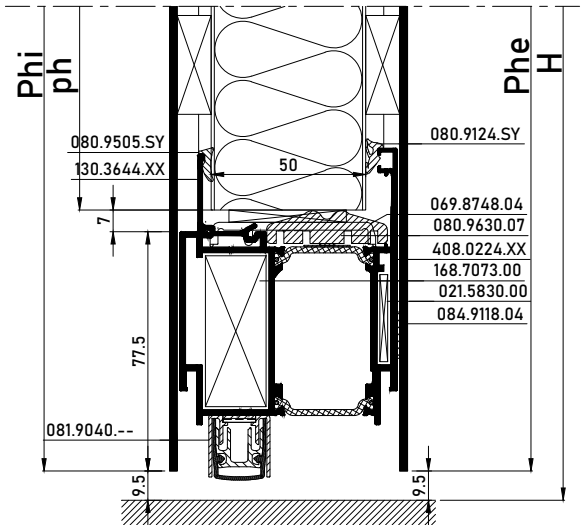

BESLAG DEUREN > ZIE "OPENING DOORS"
ACCESSOIRES PORTES > VOIRE "OPENING DOORS"
DOORS GEAR > SEE "OPENING DOORS"
TUERENBESCHLAG > SIEHE "OPENING DOORS"

MAGNETISCH PANEEL INFO
INFO PANNEAU MAGNÉTIQUE
MAGNETIC PANEL INFO
MAGNETISCHE PANEL INFORMATIONEN
WWW.HARINCK.BE

SECTIONS MASTERLINE 8-Fu Panel Door

MAGNETUDE Z-T PANEL DOOR DOUBLE SIDED OUTWARD OPENING WITH AUTOMATIC DRAUGHT EXCLUDER

MASTERLINE 8-Fu

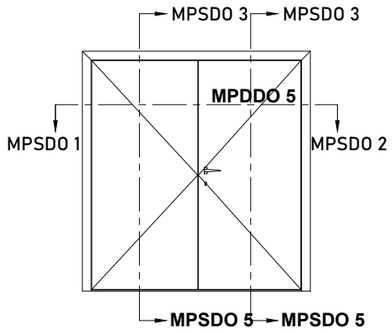

INT. B1	Pbi1 = B1- 64.5	Phi = H - 84
INT. B2	Pbi2 = B2 -90.5	Phi = H - 84
EXT. B1	Pbe1 = B1-64.5	Phe = H - 58
EXT. B2	Pbe2 = B2-38.5	Phe = H-58
IN. b1	pb1=B1 - 207.5	ph = H - 227
IN. b2	pb2=B2 - 207.5	ph = H - 227

			#	Lm
408.0869.XX			1	B
			1	H
			1	H
408.0214.XX			2	B1 - 68.5
			2	B2 - 68.5
			3	H - 88
030.3644.XX			2	B1 - 193.5
			2	B2 - 193.5
			4	H - 263

BESLAG DEUREN > ZIE "OPENING DOORS"
ACCESSOIRES PORTES > VOIRE "OPENING DOORS"
DOORS GEAR > SEE "OPENING DOORS"
TUERENBESCHLAG > SIEHE "OPENING DOORS"

MAGNETISCH PANEEL INFO
INFO PANNEAU MAGNÉTIQUE
MAGNETIC PANEL INFO
MAGNETISCHE PANEL INFORMATIONEN
WWW.HARINCK.BE

		#
168.7071.00		2
168.8072.00		2
168.7073.00		6
021.5830.00		8
168.7088.00		2
069.8748.04		8
169.8513.04		1
052.5316.--		4
169.8510.04		2
069.8426.04		4
052.5316.--		8
081.9236.04		6 x (60.5mm)
080.9078.04		(1xB)+(2xH)
080.9094.04		(1xB)+(4xH)
081.9040.--		19H.F. ...
080.9505.XX		(2xb1)+(2xb2)
		+(4xh)
080.9124.SY		(2xb1)+(2xb2)
		+(4xh)
080.9630.07		(2xB1)+(2xB2)
		4xH
084.9118.04		(8xH) + (8xB)

MPDDO 5

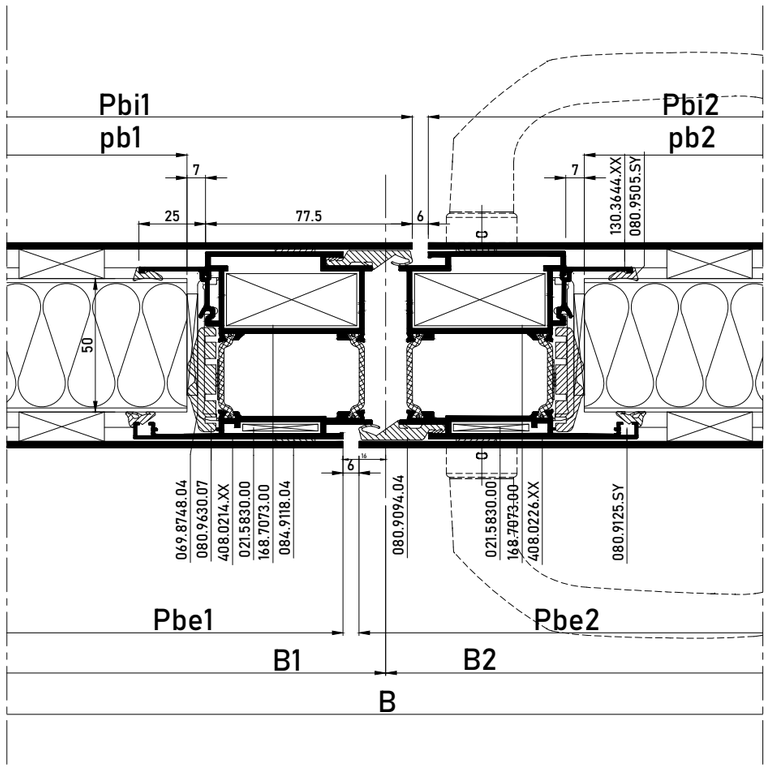

MPSDO 5

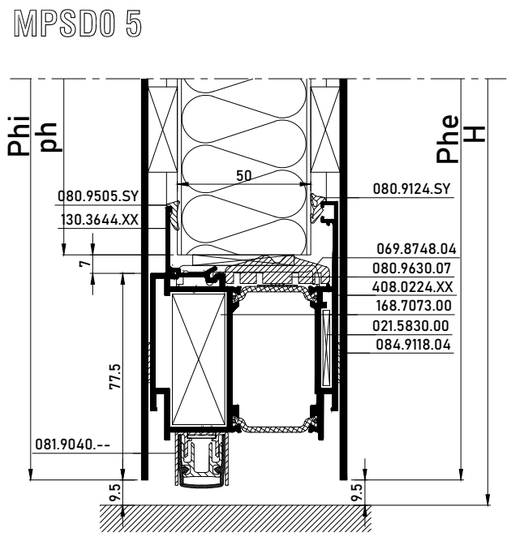

SECTIONS MASTERLINE 8-Fu Panel Door

MAGNETUDE PANEL DOOR DOUBLE SIDED OUTWARD OPENING WITH BRUSH

MASTERLINE 8-Fu

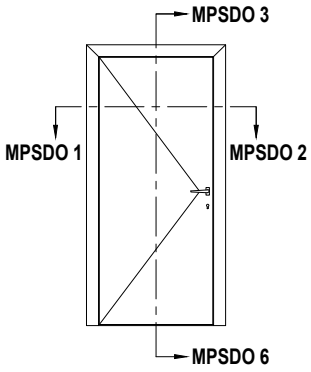

INT.	Pbi = B - 149
	Phi = H - 84
EXT.	Pbe = B - 97
	Phe = H - 58
IN.	pb = B - 266
	ph = H - 227

			#	Lm
408.0869.XX			1	B
			1	H
			1	H
408.0224.XX			2	B - 127
			2	H - 88
030.3644.XX			2	B - 252
			2	H - 263
108.0030.XX			1	B - 139

BESLAG DEUREN > ZIE "OPENING DOORS"
ACCESSOIRES PORTES > VOIRE "OPENING DOORS"
DOORS GEAR > SEE "OPENING DOORS"
TUERENBESCHLAG > SIEHE "OPENING DOORS"

MAGNETISCH PANEEL INFO
INFO PANNEAU MAGNÉTIQUE
MAGNETIC PANEL INFO
MAGNETISCHE PANEL INFORMATIONEN
WWW.HARINCK.BE

		#
168.7071.00		2
168.8072.00		2
168.7073.00		4
021.5830.00		4
069.8748.04		4
169.8513.04		1
052.5316.--		4
069.8426.04		2
052.5316.--		4
081.9236.04		4 x (60.5mm)
081.9092.04		2 x (60.5mm)
081.9141.04		19.F. ...
080.9505.SY		(2xB)+(2xH)
080.9124.SY		(2xB)+(2xH)
080.9078.04		(1xB)+(2xH)
080.9094.04		(1xB)+(2xH)
080.9630.07		(2xB) + (2xH)
084.9118.04		(4xH) + (4xB)
052.5315.--		1/300mm

MPSDO 6

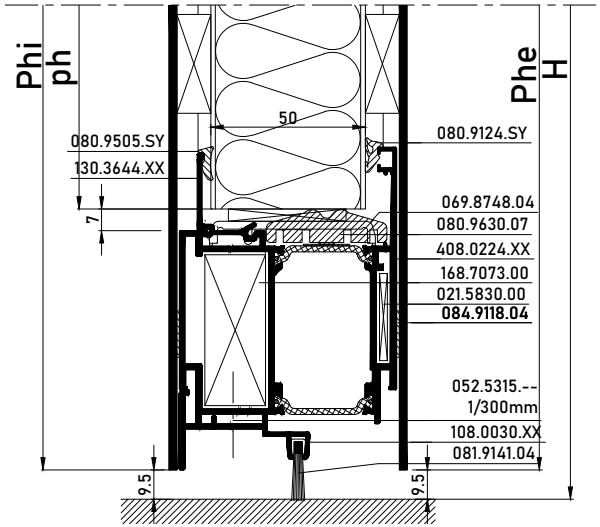

SECTIONS MASTERLINE 8-Fu Panel Door

MAGNETUDE Z-T PANEL DOOR DOUBLE SIDED OUTWARD OPENING WITH BRUSH

MASTERLINE 8-Fu

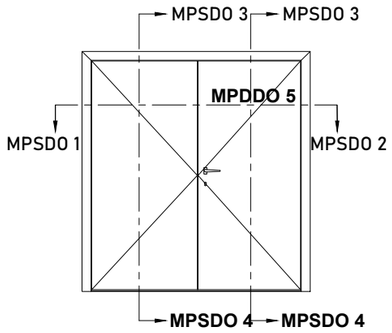

INT. B1	Pbi1 = B1- 64.5	Phi = H - 84
INT. B2	Pbi2 = B2 -90.5	Phi = H - 84
EXT. B1	Pbe1 = B1-64.5	Phe = H - 58
EXT. B2	Pbe2 = B2-38.5	Phe = H-58
IN. b1	pb1=B1 - 207.5	ph = H - 227
IN. b2	pb2=B2 - 207.5	ph = H - 227

		#	Lm
408.0869.XX		1	B
		1	H
		1	H
408.0214.XX		2	B1 - 68.5
		2	B2 - 68.5
		3	H - 88
030.3644.XX		2	B1 - 193.5
		2	B2 - 193.5
		4	H - 263
108.0030.XX		1	B1 - 77.5
		1	B2 - 80.5

BESLAG DEUREN > ZIE "OPENING DOORS"
ACCESSOIRES PORTES > VOIRE "OPENING DOORS"
DOORS GEAR > SEE "OPENING DOORS"
TUERENBESCHLAG > SIEHE "OPENING DOORS"

MAGNETISCH PANEEL INFO
INFO PANNEAU MAGNÉTIQUE
MAGNETIC PANEL INFO
MAGNETISCHE PANEL INFORMATIONEN
WWW.HARINCK.BE

	#
168.7071.00	2
168.8072.00	2
168.7073.00	6
021.5830.00	8
168.7088.00	2
069.8748.04	8
169.8513.04	1
052.5316.--	4
069.8426.04	4
052.5316.--	8
081.9236.04	6 x (60.5mm)
081.9092.04	2 x (60.5mm)
081.9141.04	19.F....
169.8522.04	2
052.5315.--	1/300mm
080.9078.04	(1xB)+(2xH)
080.9094.04	(2xB)+(3xH)
080.9505.XX	(2xb1)+(2xb2) +(4xh)
080.9124.SY	(2xb1)+(2xb2) +(4xh)
080.9630.07	(2xB1)+(2xB2) 4xH
084.9118.04	(8xH) + (8xB)

MPDDO 5

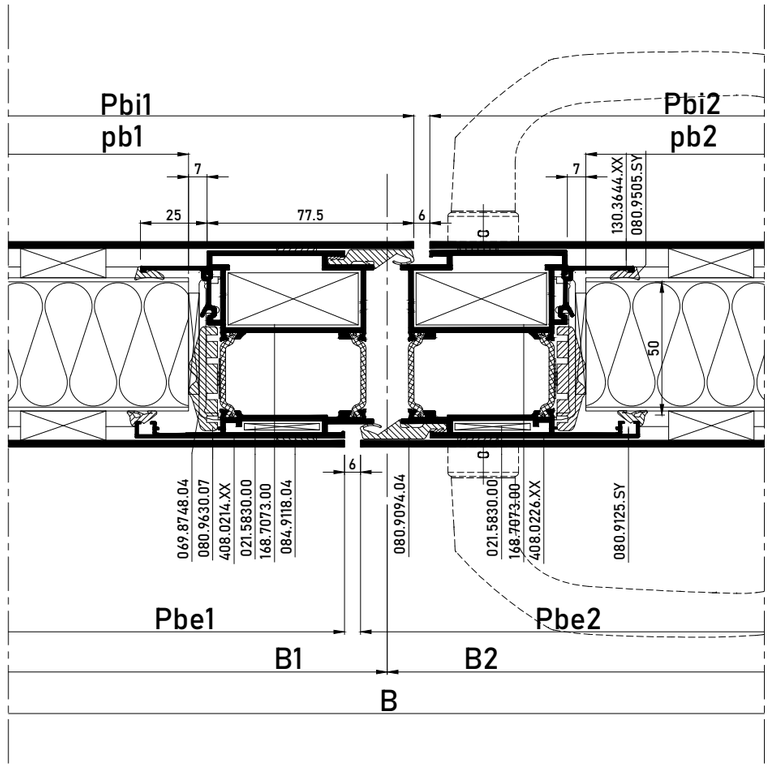

MPSS0 4

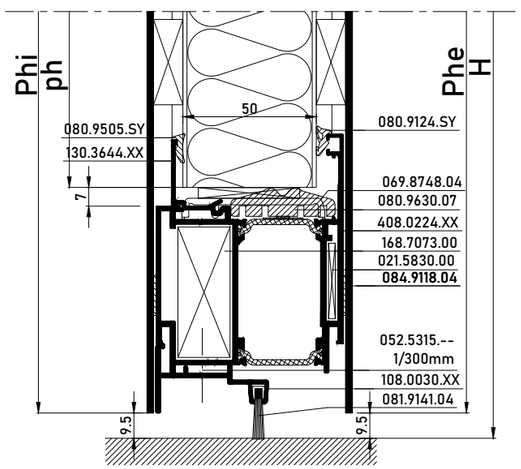

SECTIONS MASTERLINE 8-Fu

CONNECTIONS WITH OTHER SYSTEMS - MASTERLINE 10

MASTERLINE 10-Fu, MASTERLINE 8-Fu

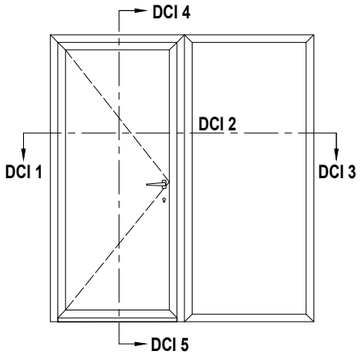

			#	Lm
408.1098.XX			1	B1
			2	H
408.0026.XX			2	B1 - 115
			2	H - 67
030.3610.XX			2	B1 - 270
			2	H - 222
030.3610.XX			2	B2 - 66
			2	H - 66
108.1873.XX			1	B1 - 165
108.0080.XX			1	B1 - 165

RAAMBESLAG > ZIE HARDWARE CONFIGURATOR
ACCESOIRES FENETRE > VOIR HARDWARE CONFIGURATOR
WINDOW GEAR >SEE HARDWARE CONFIGURATOR
FENSTERBESCHLAG > SEHE HARDWARE CONFIGURATOR

		#
168.7073.00		8
168.8074.00		8
160.8750.--		8
069.6831.SY		4
080.9091.04		8
169.8748.04		PROD STEPS
080.9078.04		(2*B1)+(2*H)
087.9940.04		(2*B1)+(2*H)
087.9941.04		B1+(2*H)
180.9630.07		(2*B1)+(2*H)
180.9114.SY		(2*B1)+(2*H)
080.9125.SY		(2*(B1+B2))+(4*H)
080.9320.04		B1
080.9320.04		B1
168.8002.00		4
168.7002.00		4
160.8750.--		4
080.9637.04		2H
180.9632.07		(2*B2)+(2*H)
180.9118.04		(2*B2)+(2*H)
187.0183.07		(2*B2)+(2*H)
087.9882.07		(2*B2)+(2*H)
087.9874.07		(2*B2)+(2*H)
052.5317.--		PROD STEPS
052.5329.--		PROD STEPS
052.5300.--		PROD STEPS

b1 = B1 - 286
h1 = H - 286
b2 = B2 - 82
h2 = H - 82

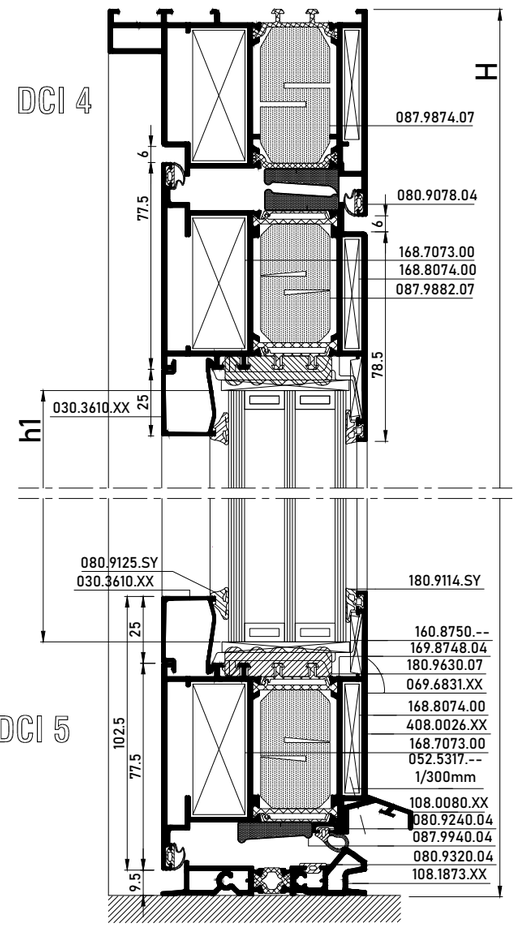

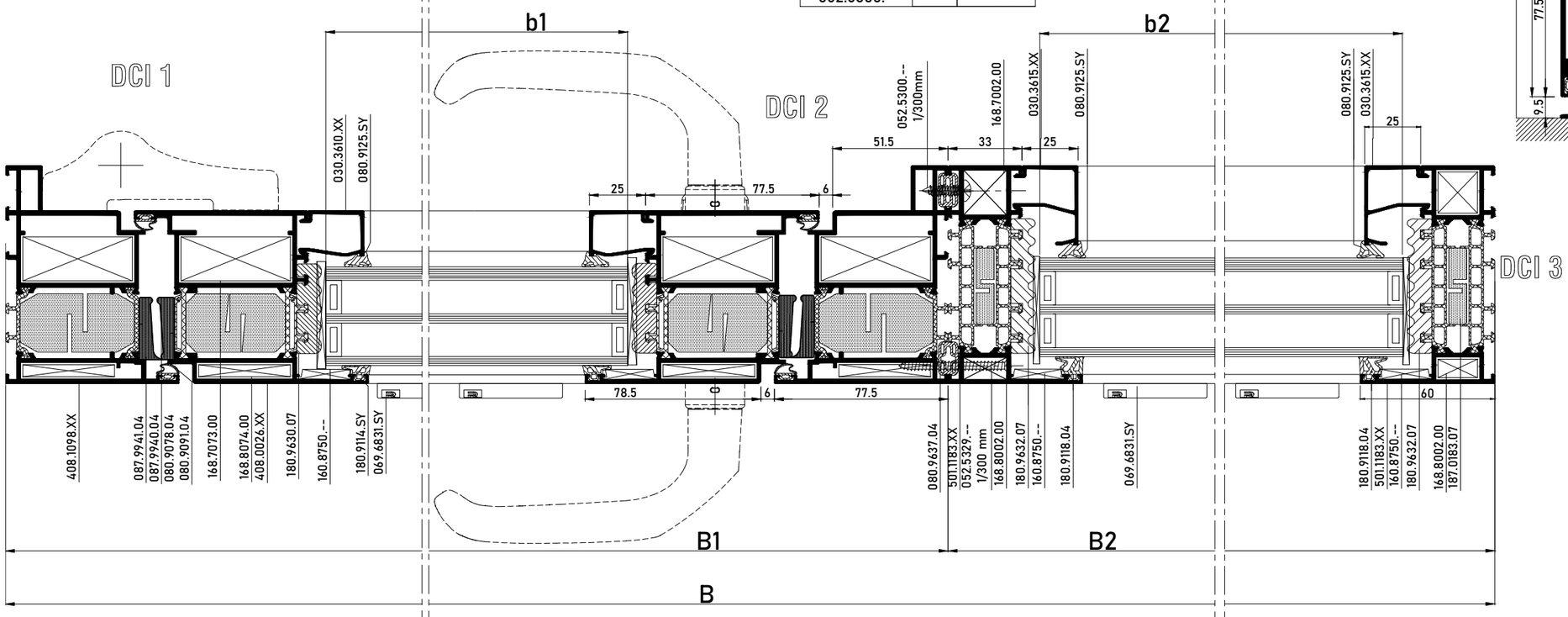

SECTIONS MASTERLINE 8-Fu

CONNECTIONS WITH OTHER SYSTEMS - MASTERLINE 10

MASTERLINE 10-Fu, MASTERLINE 8-Fu

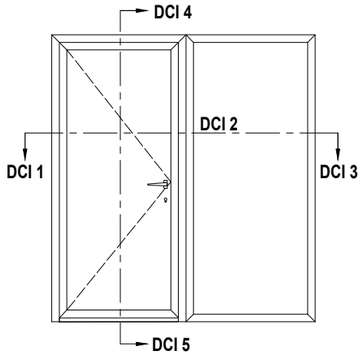

			#	Lm
408.1069.XX			1	B1
			2	H
408.0026.XX			2	B1 - 115
			2	H - 67
030.3610.XX			2	B1 - 270
			2	H - 222
030.3610.XX			2	B2 - 66
			2	H - 66
108.1873.XX			1	B1 - 165
108.0080.XX			1	B1 - 165

RAAMBESLAG > ZIE HARDWARE CONFIGURATOR
ACCESOIRES FENETRE > VOIR HARDWARE CONFIGURATOR
WINDOW GEAR >SEE HARDWARE CONFIGURATOR
FENSTERBESCHLAG > SEHE HARDWARE CONFIGURATOR

		#
168.7073.00		8
168.8074.00		8
160.8750.--		8
069.6831.SY		4
080.9091.04		8
169.8748.04		PROD STEPS
080.9078.04		(2*B1)+(2*H)
087.9940.04		(2*B1)+(2*H)
087.9941.04		B1+(2*H)
180.9630.07		(2*B1)+(2*H)
180.9114.SY		(2*B1)+(2*H)
080.9125.SY		(2*B)+(4*H)
080.9320.04		B1
080.9320.04		B1
168.8002.00		4
168.7002.00		4
160.8750.--		4
080.9637.04		2H
180.9632.07		(2*B2)+(2*H)
180.9118.04		(2*B2)+(2*H)
187.0183.07		(2*B2)+(2*H)
087.9882.07		(2*B2)+(2*H)
087.9874.07		(2*B2)+(2*H)
052.5317.--		PROD STEPS
052.5329.--		PROD STEPS
052.5300.--		PROD STEPS

b1 = B1 - 286
h1 = H - 286
b2 = B2 - 82
h2 = H - 82

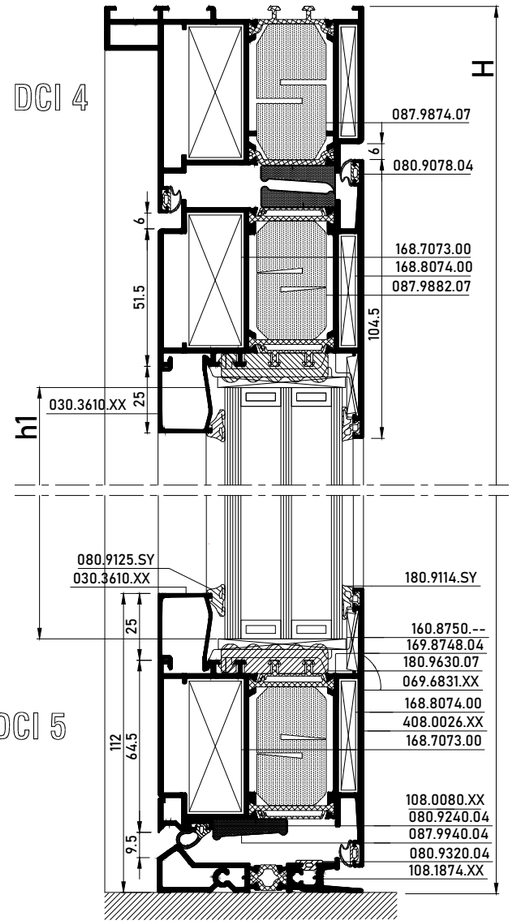

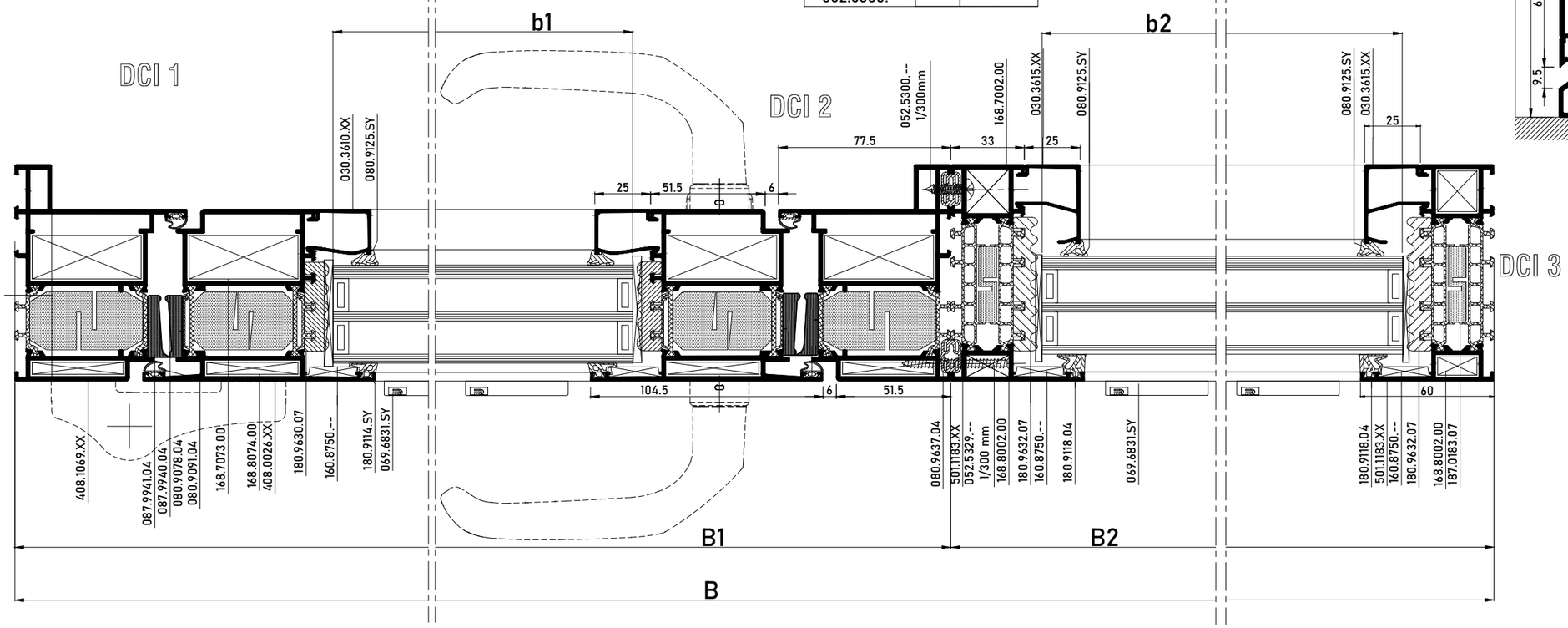

Production Steps
Productiestappen
Étapes de production
Verarbeitungs-Zeichnungen

Reynaers Aluminium


WI

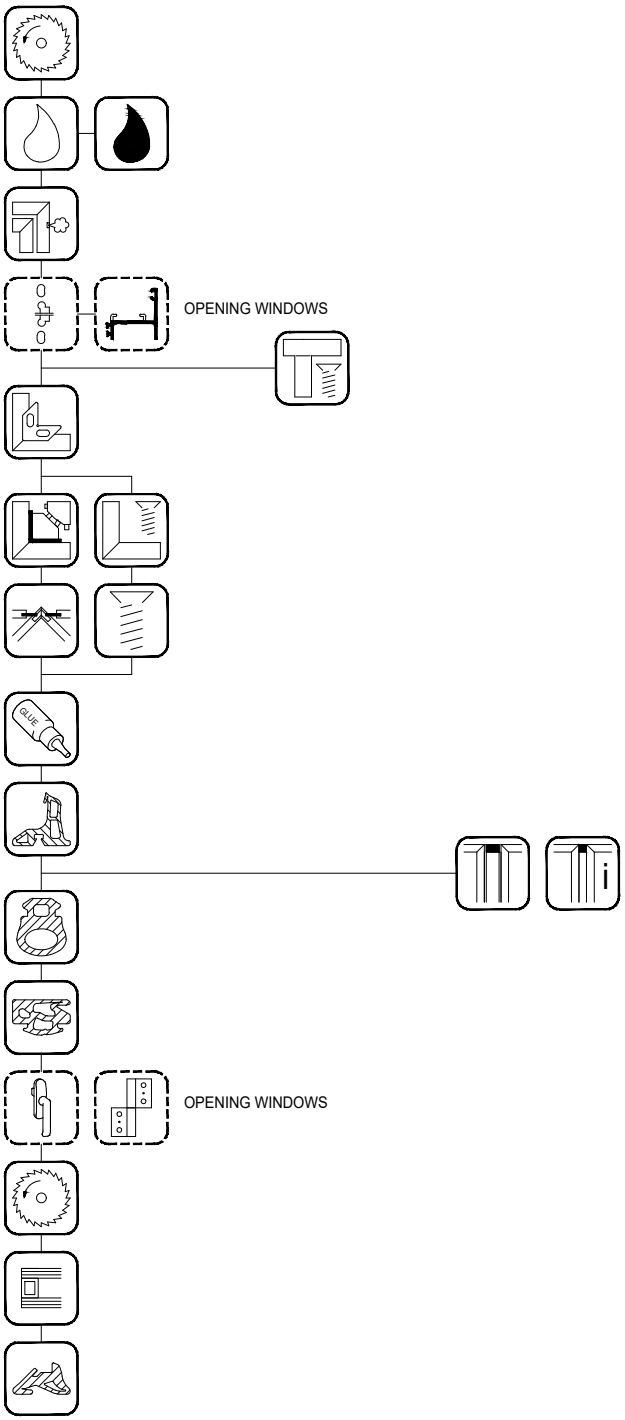
OPENING WINDOWS
GLUE
OPENING WINDOWS

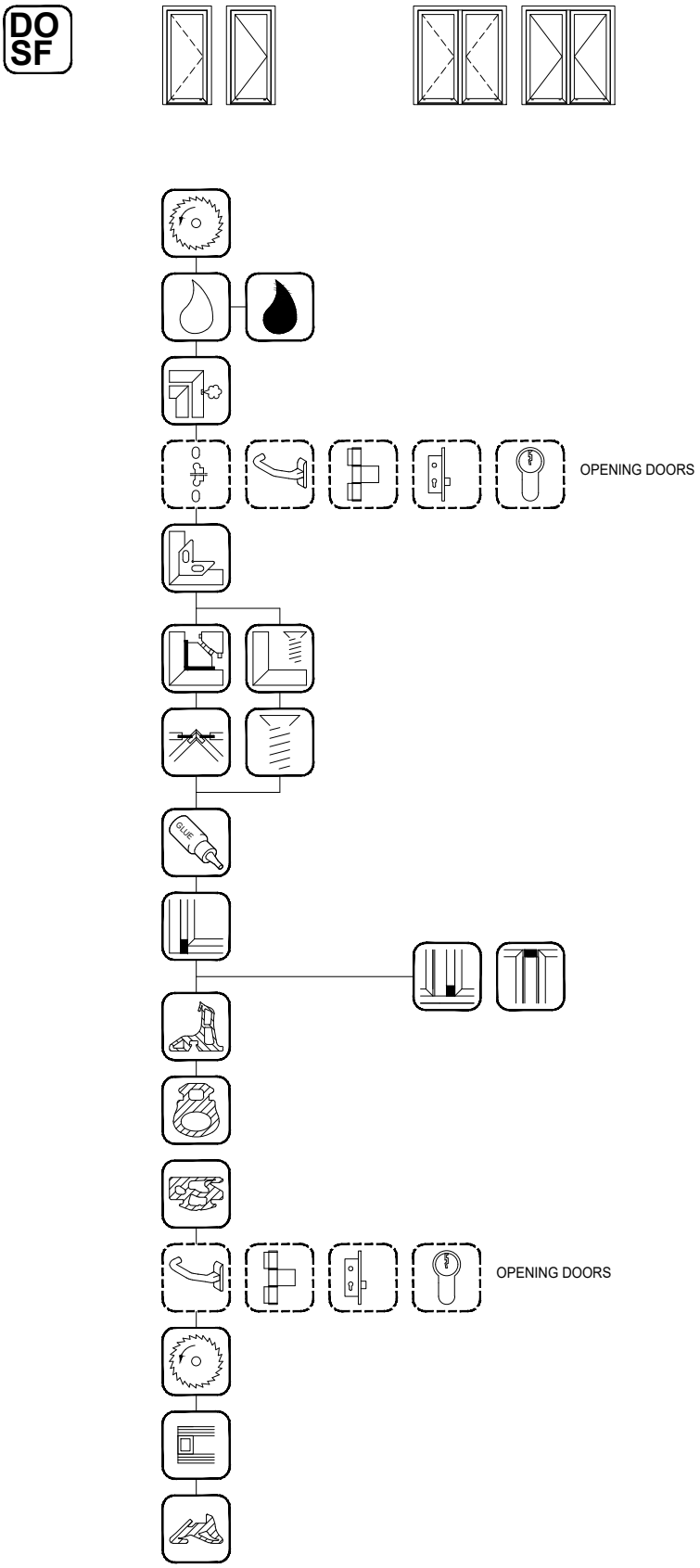
DO
SF
OPENING DOORS
GLUE
OPENING DOORS

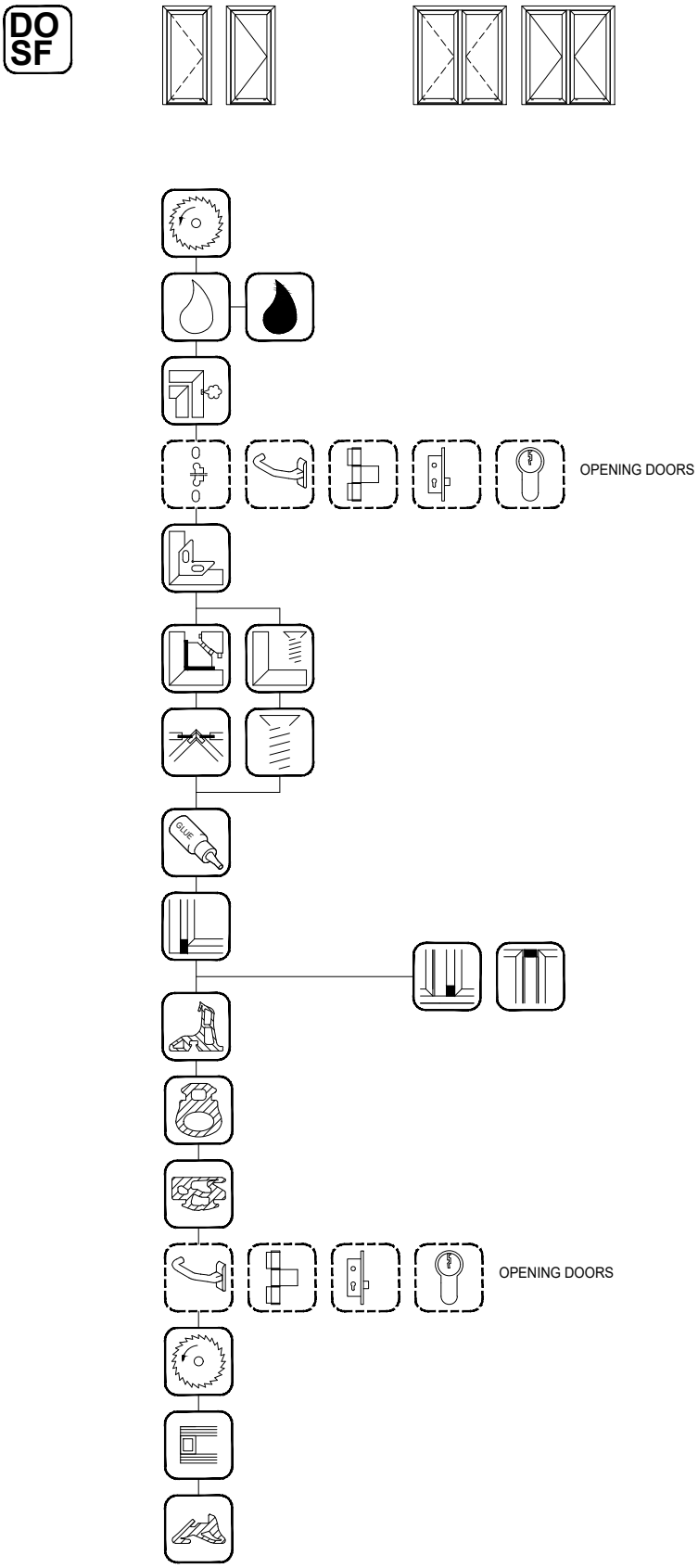
DO
SF
OPENING DOORS
GLUE
OPENING DOORS

SAWING CLAMP

CLAMP BLOCKS SAW 095.B600.00 | 095.B621.00

MASTERLINE 8-Fu

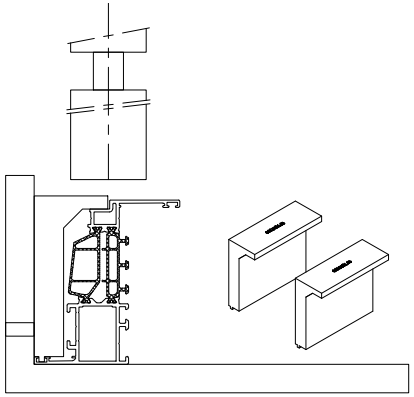

095.B600-04	
408.0102.XX	508.0102.XX
408.0112.XX	508.0112.XX
408.0192.XX	508.0192.XX
408.0202.XX	508.0202.XX
408.0212.XX	508.0212.XX
408.0266.XX	508.0292.XX
408.0292.XX	508.0902.XX
408.0902.XX	508.0912.XX
408.0912.XX	508.0992.XX
408.0992.XX	

095.B621.00

095.B620.00

095.B621.00

BIJKOMENDE INFO VOORBEREIDING/VERWERKING -> ZIE 'VERWERKINGSVOORSCHRIFTEN' !
INFO COMPLEMENTAIRE PREPARATION/USINAGE -> VOIR 'PRESCRIPTIONS DE MISE EN OEUVRE' !
ADDITIONAL INFO PREPARATION/PROCESSING -> SEE 'PROCESSING DATA' !
ZUSAETZLICHE INFO VORBEREITUNG/VERARBEITUNG -> SIEHE 'VERARBEITUNGSVORSCHRIFTEN' !

SAWING CLAMP

CLAMP BLOCKS SAW 095.B600.00

MASTERLINE 8-Fu

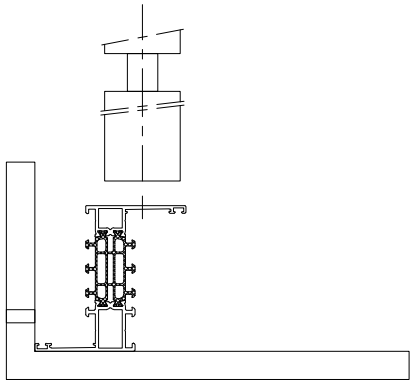

BIJKOMENDE INFO VOORBEREIDING/VERWERKING -> ZIE 'VERWERKINGSVOORSCHRIFTEN' !
INFO COMPLEMENTAIRE PREPARATION/USINAGE -> VOIR 'PRESCRIPTIONS DE MISE EN OEUVRE' !
ADDITIONAL INFO PREPARATION/PROCESSING -> SEE 'PROCESSING DATA' !
ZUSAETZLICHE INFO VORBEREITUNG/VERARBEITUNG -> SIEHE 'VERARBEITUNGSVORSCHRIFTEN' !

SAWING CLAMP

CLAMP BLOCKS SAW 095.B600.00

MASTERLINE 8-Fu

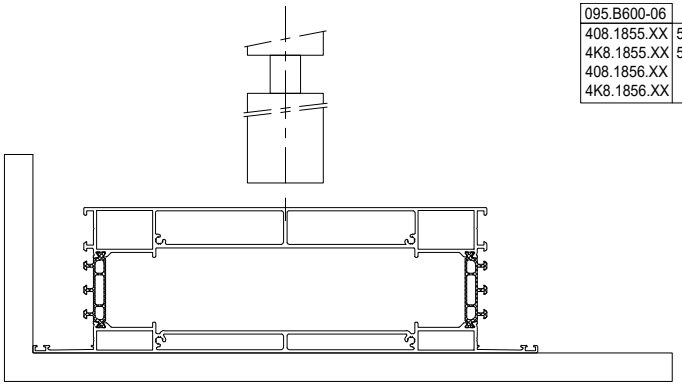

095.B600-06	
408.1855.XX 4K8.1855.XX 408.1856.XX 4K8.1856.XX	508.1855.XX 508.1856.XX

BIJKOMENDE INFO VOORBEREIDING/VERWERKING -> ZIE 'VERWERKINGSVOORSCHRIFTEN' !
INFO COMPLEMENTAIRE PREPARATION/USINAGE -> VOIR 'PRESCRIPTIONS DE MISE EN OEUVRE' !
ADDITIONAL INFO PREPARATION/PROCESSING -> SEE 'PROCESSING DATA' !
ZUSAETZLICHE INFO VORBEREITUNG/VERARBEITUNG -> SIEHE 'VERARBEITUNGSVORSCHRIFTEN' !

SAWING CLAMP

CLAMP BLOCKS SAW 095.B600.00

MASTERLINE 8-Fu

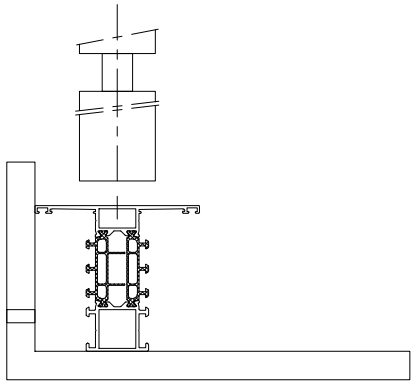

095.B600-07	
408.0010.XX	508.0010.XX
4K8.0010.XX	508.0011.XX
408.0011.XX	508.0113.XX
4K8.0011.XX	508.0114.XX
408.0113.XX	508.0120.XX
4K8.0113.XX	508.0165.XX
408.0114.XX	508.0213.XX
4K8.0114.XX	508.0220.XX
408.0120.XX	508.0813.XX
4K8.0120.XX	508.0815.XX
408.0165.XX	508.0820.XX
408.0213.XX	508.0913.XX
408.0220.XX	508.0920.XX
408.0438.XX	508.1116.XX
408.0439.XX	5F8.1116.XX
408.0813.XX	508.1123.XX
408.0815.XX	5F8.1123.XX
408.0820.XX	508.1850.XX
408.0913.XX	508.1851.XX
408.0920.XX	508.1852.XX
408.1116.XX	508.1853.XX
4F8.1116.XX	508.1854.XX
408.1123.XX	
4F8.1123.XX	
408.1850.XX	
4K8.1851.XX	
408.1852.XX	
4K8.1852.XX	
408.1853.XX	
4K8.1853.XX	
408.1854.XX	
4K8.1854.XX	

BIJKOMENDE INFO VOORBEREIDING/VERWERKING -> ZIE 'VERWERKINGSVOORSCHRIFTEN' !
INFO COMPLEMENTAIRE PREPARATION/USINAGE -> VOIR 'PRESCRIPTIONS DE MISE EN OEUVRE' !
ADDITIONAL INFO PREPARATION/PROCESSING -> SEE 'PROCESSING DATA' !
ZUSAETZLICHE INFO VORBEREITUNG/VERARBEITUNG -> SIEHE 'VERARBEITUNGSVORSCHRIFTEN' !

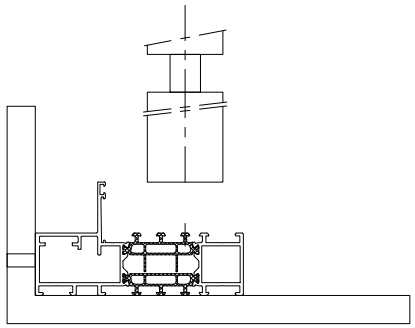

BIJKOMENDE INFO VOORBEREIDING/VERWERKING -> ZIE 'VERWERKINGSVOORSCHRIFTEN' !
INFO COMPLEMENTAIRE PREPARATION/USINAGE -> VOIR 'PRESCRIPTIONS DE MISE EN OEUVRE' !
ADDITIONAL INFO PREPARATION/PROCESSING -> SEE 'PROCESSING DATA' !
ZUSAETZLICHE INFO VORBEREITUNG/VERARBEITUNG -> SIEHE 'VERARBEITUNGSVORSCHRIFTEN' !

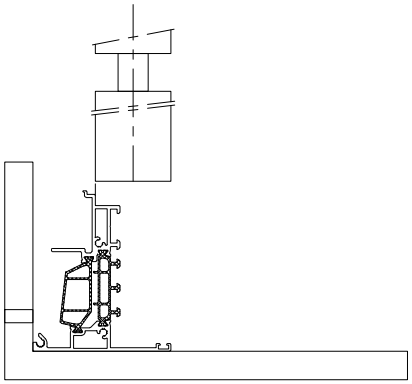

095.B600-08	
408.1115.XX	408.1115.XX

BIJKOMENDE INFO VOORBEREIDING/VERWERKING -> ZIE 'VERWERKINGSVOORSCHRIFTEN' !
INFO COMPLEMENTAIRE PREPARATION/USINAGE -> VOIR 'PRESCRIPTIONS DE MISE EN OEUVRE' !
ADDITIONAL INFO PREPARATION/PROCESSING -> SEE 'PROCESSING DATA' !
ZUSAETZLICHE INFO VORBEREITUNG/VERARBEITUNG -> SIEHE 'VERARBEITUNGSVORSCHRIFTEN' !

SAWING CLAMP

CLAMP BLOCKS SAW 095.B600.00

MASTERLINE 8-Fu

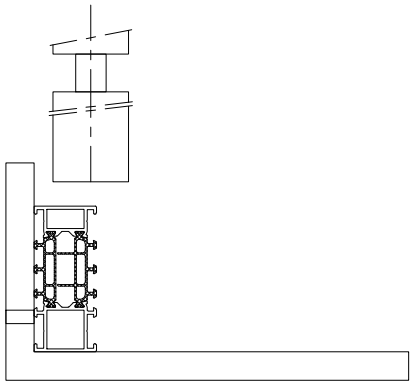

095.B600-03	
108.0862.39	508.0890.XX
408.0890.XX	508.0892.XX
408.0892.XX	508.0894.XX
408.0894.XX	508.1891.XX
408.1891.XX	508.1896.XX
408.1896.XX	5F8.1896.XX
4F8.1896.XX	



095.B621.00

095.B620.00

095.B621.00

BIJKOMENDE INFO VOORBEREIDING/VERWERKING -> ZIE 'VERWERKINGSVOORSCHRIFTEN' !
INFO COMPLEMENTAIRE PREPARATION/USINAGE -> VOIR 'PRESCRIPTIONS DE MISE EN OEUVRE' !
ADDITIONAL INFO PREPARATION/PROCESSING -> SEE 'PROCESSING DATA' !
ZUSAETZLICHE INFO VORBEREITUNG/VERARBEITUNG -> SIEHE 'VERARBEITUNGSVORSCHRIFTEN' !

SAWING CLAMP

CLAMP BLOCKS SAW 095.B600.00 | 095.B621.00

MASTERLINE 8-Fu

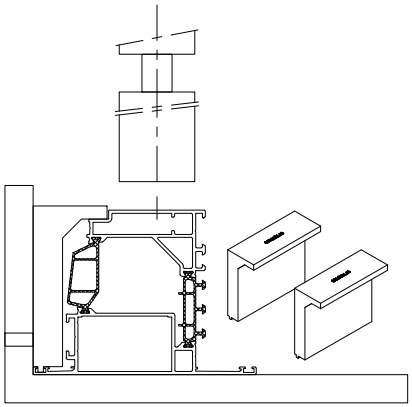

095.B600-05	
408.0041.XX	508.1051.XX
408.1051.XX	5F8.1051.XX
4F8.1051.XX	508.1251.XX
408.1251.XX	5F8.1251.XX
4F8.1251.XX	508.1951.XX
408.1951.XX	5F8.1951.XX
4F8.1951.XX	

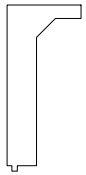

095.B621.00

095.B620.00

095.B621.00

BIJKOMENDE INFO VOORBEREIDING/VERWERKING -> ZIE 'VERWERKINGSVOORSCHRIFTEN' !
INFO COMPLEMENTAIRE PREPARATION/USINAGE -> VOIR 'PRESCRIPTIONS DE MISE EN OEUVRE' !
ADDITIONAL INFO PREPARATION/PROCESSING -> SEE 'PROCESSING DATA' !
ZUSAETZLICHE INFO VORBEREITUNG/VERARBEITUNG -> SIEHE 'VERARBEITUNGSVORSCHRIFTEN' !

SAWING CLAMP

CLAMP BLOCKS SAW 095.B600.00

MASTERLINE 8-Fu

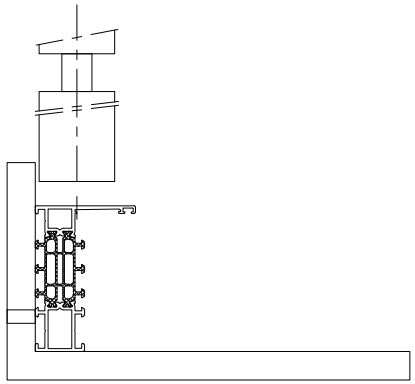

095.B600-01	
408.0125.XX	508.0125.XX
408.0136.XX	508.0136.XX
408.0160.XX	508.0160.XX
408.0169.XX	508.0169.XX
4F8.0169.XX	5F8.0169.XX
408.0183.XX	508.0183.XX
408.0236.XX	508.0236.XX
408.0283.XX	508.0283.XX
408.0715.XX	508.0825.XX
408.0790.XX	508.0826.XX
408.0804.XX	508.0880.XX
408.0825.XX	508.0882.XX
408.0826.XX	508.0883.XX
408.0880.XX	508.0885.XX
408.0882.XX	508.0886.XX
408.0883.XX	508.0936.XX
408.0885.XX	508.1140.XX
408.0886.XX	508.1142.XX
408.0936.XX	5F8.1142.XX
408.0983.XX	
408.1140.XX	
408.1142.XX	
4F8.1142.XX	

BIJKOMENDE INFO VOORBEREIDING/VERWERKING -> ZIE 'VERWERKINGSVOORSCHRIFTEN' !
INFO COMPLEMENTAIRE PREPARATION/USINAGE -> VOIR 'PRESCRIPTIONS DE MISE EN OEUVRE' !
ADDITIONAL INFO PREPARATION/PROCESSING -> SEE 'PROCESSING DATA' !
ZUSAETZLICHE INFO VORBEREITUNG/VERARBEITUNG -> SIEHE 'VERARBEITUNGSVORSCHRIFTEN' !

SAWING CLAMP

CLAMP BLOCKS SAW 095.B600.00 | 095.B621.00

MASTERLINE 8-Fu

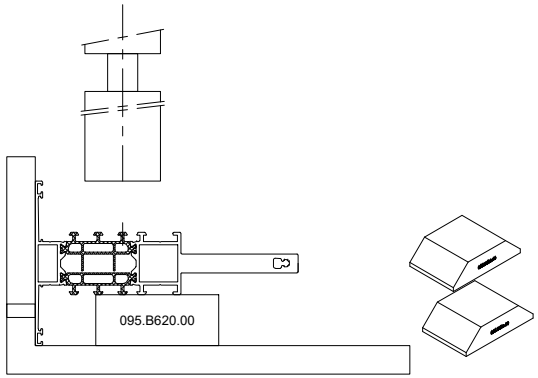



095.B621.00

095.B620.00

095.B621.00

BIJKOMENDE INFO VOORBEREIDING/VERWERKING -> ZIE 'VERWERKINGSVOORSCHRIFTEN' !
INFO COMPLEMENTAIRE PREPARATION/USINAGE -> VOIR 'PRESCRIPTIONS DE MISE EN OEUVRE' !
ADDITIONAL INFO PREPARATION/PROCESSING -> SEE 'PROCESSING DATA' !
ZUSAETZLICHE INFO VORBEREITUNG/VERARBEITUNG -> SIEHE 'VERARBEITUNGSVORSCHRIFTEN' !



SAWING CLAMP

CLAMP BLOCKS SAW 095.B600.00

MASTERLINE 8-Fu

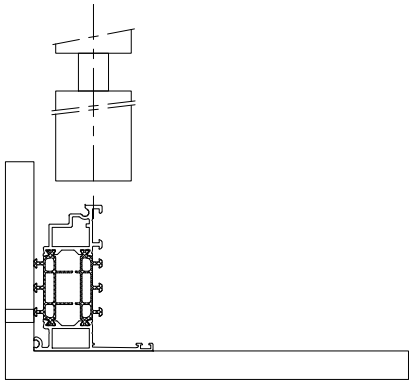

BIJKOMENDE INFO VOORBEREIDING/VERWERKING -> ZIE 'VERWERKINGSVOORSCHRIFTEN' !
INFO COMPLEMENTAIRE PREPARATION/USINAGE -> VOIR 'PRESCRIPTIONS DE MISE EN OEUVRE' !
ADDITIONAL INFO PREPARATION/PROCESSING -> SEE 'PROCESSING DATA' !
ZUSAETZLICHE INFO VORBEREITUNG/VERARBEITUNG -> SIEHE 'VERARBEITUNGSVORSCHRIFTEN' !

SAWING CLAMP

CLAMP BLOCKS SAW 095.B600.00

MASTERLINE 8-Fu

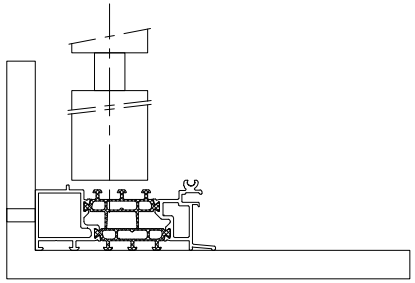

BIJKOMENDE INFO VOORBEREIDING/VERWERKING -> ZIE 'VERWERKINGSVOORSCHRIFTEN' !
INFO COMPLEMENTAIRE PREPARATION/USINAGE -> VOIR 'PRESCRIPTIONS DE MISE EN OEUVRE' !
ADDITIONAL INFO PREPARATION/PROCESSING -> SEE 'PROCESSING DATA' !
ZUSAETZLICHE INFO VORBEREITUNG/VERARBEITUNG -> SIEHE 'VERARBEITUNGSVORSCHRIFTEN' !

SAWING CLAMP

CLAMP BLOCKS SAW 095.B600.00

MASTERLINE 8-Fu

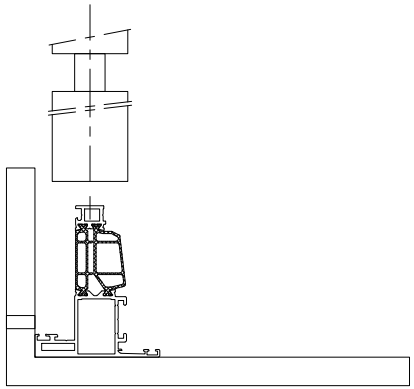

BIJKOMENDE INFO VOORBEREIDING/VERWERKING -> ZIE 'VERWERKINGSVOORSCHRIFTEN' !
INFO COMPLEMENTAIRE PREPARATION/USINAGE -> VOIR 'PRESCRIPTIONS DE MISE EN OEUVRE' !
ADDITIONAL INFO PREPARATION/PROCESSING -> SEE 'PROCESSING DATA' !
ZUSAETZLICHE INFO VORBEREITUNG/VERARBEITUNG -> SIEHE 'VERARBEITUNGSVORSCHRIFTEN' !

SAWING CLAMP

CLAMP BLOCKS SAW 095.B600.00

MASTERLINE 8-Fu

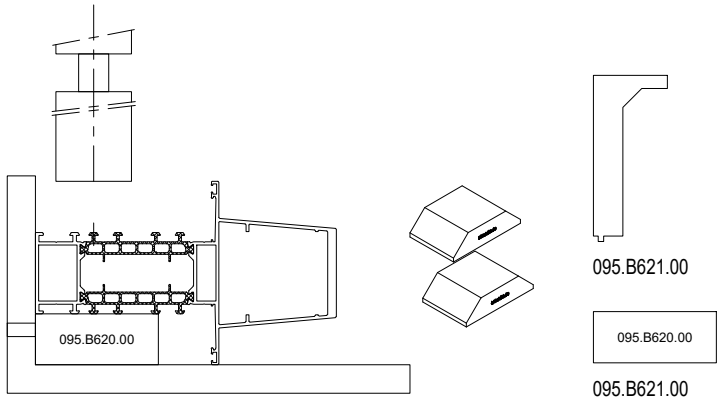

095.B621.00

095.B620.00

095.B621.00

BIJKOMENDE INFO VOORBEREIDING/VERWERKING -> ZIE 'VERWERKINGSVOORSCHRIFTEN' !
INFO COMPLEMENTAIRE PREPARATION/USINAGE -> VOIR 'PRESCRIPTIONS DE MISE EN OEUVRE' !
ADDITIONAL INFO PREPARATION/PROCESSING -> SEE 'PROCESSING DATA' !
ZUSAETZLICHE INFO VORBEREITUNG/VERARBEITUNG -> SIEHE 'VERARBEITUNGSVORSCHRIFTEN' !

SAWING CLAMP

CLAMP BLOCKS SAW 095.B600.00

MASTERLINE 8-Fu

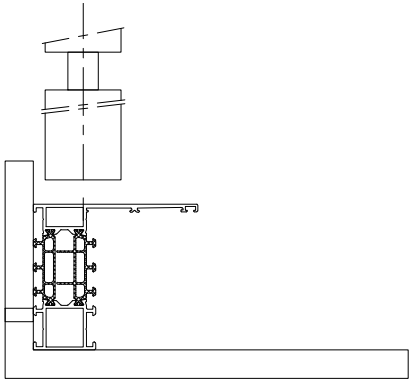

BIJKOMENDE INFO VOORBEREIDING/VERWERKING -> ZIE 'VERWERKINGSVOORSCHRIFTEN' !
INFO COMPLEMENTAIRE PREPARATION/USINAGE -> VOIR 'PRESCRIPTIONS DE MISE EN OEUVRE' !
ADDITIONAL INFO PREPARATION/PROCESSING -> SEE 'PROCESSING DATA' !
ZUSAETZLICHE INFO VORBEREITUNG/VERARBEITUNG -> SIEHE 'VERARBEITUNGSVORSCHRIFTEN' !

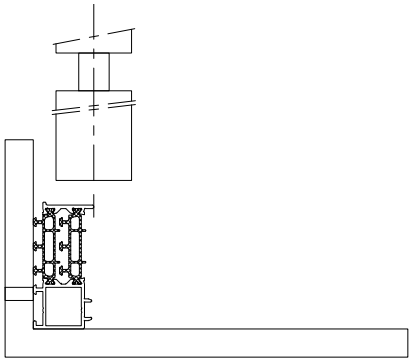

BIJKOMENDE INFO VOORBEREIDING/VERWERKING -> ZIE 'VERWERKINGSVOORSCHRIFTEN' !
INFO COMPLEMENTAIRE PREPARATION/USINAGE -> VOIR 'PRESCRIPTIONS DE MISE EN OEUVRE' !
ADDITIONAL INFO PREPARATION/PROCESSING -> SEE 'PROCESSING DATA' !
ZUSAETZLICHE INFO VORBEREITUNG/VERARBEITUNG -> SIEHE 'VERARBEITUNGSVORSCHRIFTEN' !

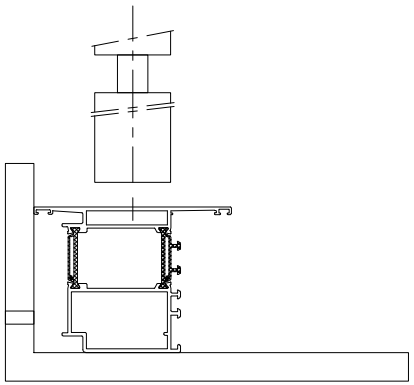

BIJKOMENDE INFO VOORBEREIDING/VERWERKING -> ZIE 'VERWERKINGSVOORSCHRIFTEN' !
INFO COMPLEMENTAIRE PREPARATION/USINAGE -> VOIR 'PRESCRIPTIONS DE MISE EN OEUVRE' !
ADDITIONAL INFO PREPARATION/PROCESSING -> SEE 'PROCESSING DATA' !
ZUSAETZLICHE INFO VORBEREITUNG/VERARBEITUNG -> SIEHE 'VERARBEITUNGSVORSCHRIFTEN' !

SAWING CLAMP

CLAMP BLOCKS SAW 095.B600.00

MASTERLINE 8-Fu

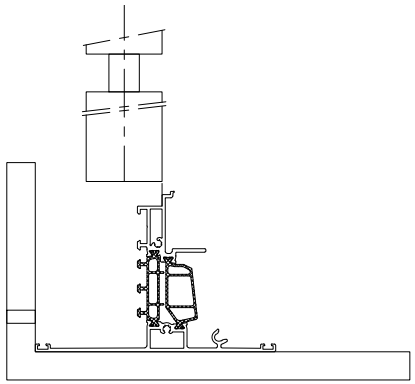

BIJKOMENDE INFO VOORBEREIDING/VERWERKING -> ZIE 'VERWERKINGSVOORSCHRIFTEN' !
INFO COMPLEMENTAIRE PREPARATION/USINAGE -> VOIR 'PRESCRIPTIONS DE MISE EN OEUVRE' !
ADDITIONAL INFO PREPARATION/PROCESSING -> SEE 'PROCESSING DATA' !
ZUSAETZLICHE INFO VORBEREITUNG/VERARBEITUNG -> SIEHE 'VERARBEITUNGSVORSCHRIFTEN' !

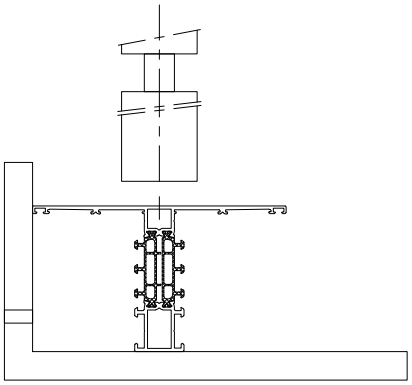

BIJKOMENDE INFO VOORBEREIDING/VERWERKING -> ZIE 'VERWERKINGSVOORSCHRIFTEN' !
INFO COMPLEMENTAIRE PREPARATION/USINAGE -> VOIR 'PRESCRIPTIONS DE MISE EN OEUVRE' !
ADDITIONAL INFO PREPARATION/PROCESSING -> SEE 'PROCESSING DATA' !
ZUSAETZLICHE INFO VORBEREITUNG/VERARBEITUNG -> SIEHE 'VERARBEITUNGSVORSCHRIFTEN' !

SAWING CLAMP

CLAMP BLOCKS SAW 095.B600.00

MASTERLINE 8-Fu

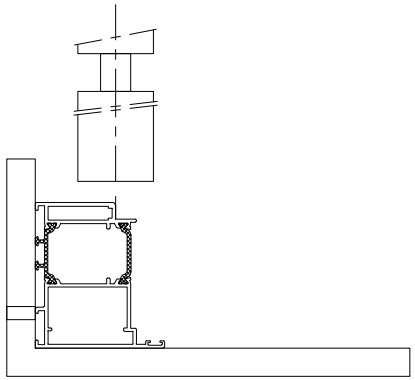

BIJKOMENDE INFO VOORBEREIDING/VERWERKING -> ZIE 'VERWERKINGSVOORSCHRIFTEN' !
INFO COMPLEMENTAIRE PREPARATION/USINAGE -> VOIR 'PRESCRIPTIONS DE MISE EN OEUVRE' !
ADDITIONAL INFO PREPARATION/PROCESSING -> SEE 'PROCESSING DATA' !
ZUSAETZLICHE INFO VORBEREITUNG/VERARBEITUNG -> SIEHE 'VERARBEITUNGSVORSCHRIFTEN' !

SAWING CLAMP

CLAMP BLOCKS SAW 095.B600.00

MASTERLINE 8-Fu

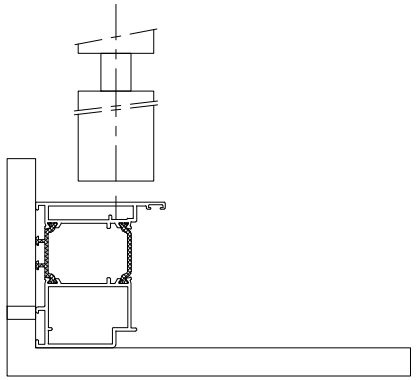

BIJKOMENDE INFO VOORBEREIDING/VERWERKING -> ZIE 'VERWERKINGSVOORSCHRIFTEN' !
INFO COMPLEMENTAIRE PREPARATION/USINAGE -> VOIR 'PRESCRIPTIONS DE MISE EN OEUVRE' !
ADDITIONAL INFO PREPARATION/PROCESSING -> SEE 'PROCESSING DATA' !
ZUSAETZLICHE INFO VORBEREITUNG/VERARBEITUNG -> SIEHE 'VERARBEITUNGSVORSCHRIFTEN' !

SAWING CLAMP

CLAMP BLOCKS SAW 095.B600.00

MASTERLINE 8-Fu

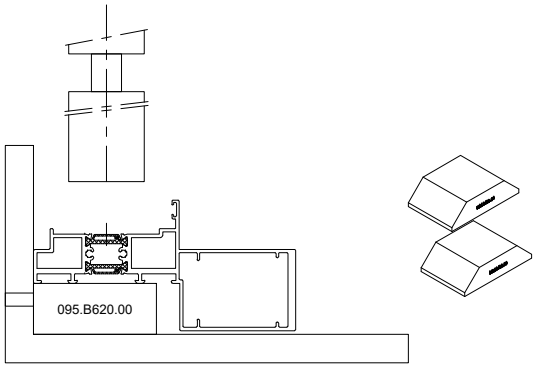

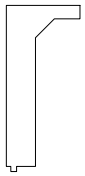

095.B621.00

095.B620.00

095.B621.00

BIJKOMENDE INFO VOORBEREIDING/VERWERKING -> ZIE 'VERWERKINGSVOORSCHRIFTEN' !
INFO COMPLEMENTAIRE PREPARATION/USINAGE -> VOIR 'PRESCRIPTIONS DE MISE EN OEUVRE' !
ADDITIONAL INFO PREPARATION/PROCESSING -> SEE 'PROCESSING DATA' !
ZUSAETZLICHE INFO VORBEREITUNG/VERARBEITUNG -> SIEHE 'VERARBEITUNGSVORSCHRIFTEN' !

SAWING CLAMP

CLAMP BLOCKS SAW 095.B600.00

MASTERLINE 8-Fu

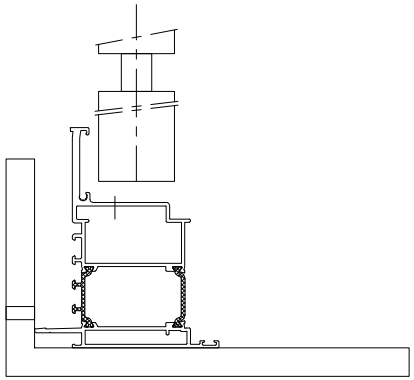

BIJKOMENDE INFO VOORBEREIDING/VERWERKING -> ZIE 'VERWERKINGSVOORSCHRIFTEN' !
INFO COMPLEMENTAIRE PREPARATION/USINAGE -> VOIR 'PRESCRIPTIONS DE MISE EN OEUVRE' !
ADDITIONAL INFO PREPARATION/PROCESSING -> SEE 'PROCESSING DATA' !
ZUSAETZLICHE INFO VORBEREITUNG/VERARBEITUNG -> SIEHE 'VERARBEITUNGSVORSCHRIFTEN' !

CLAMP BLOCKS OVERVIEW

CLAMP BLOCKS SAW 095.B600.00 | 095.B621.00

MASTERLINE 8-Fu

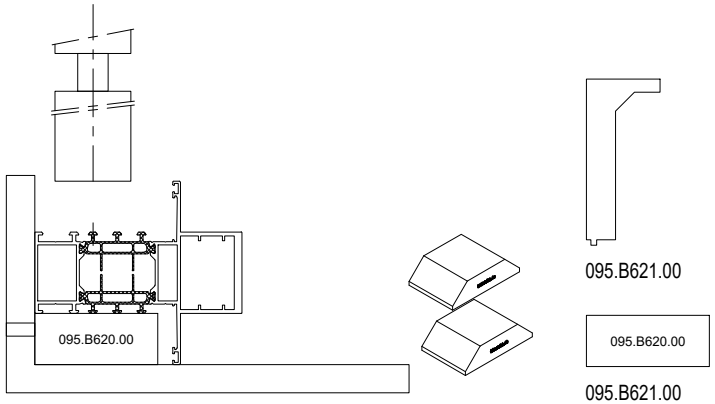

095.B621.00

095.B620.00

095.B621.00

BIJKOMENDE INFO VOORBEREIDING/VERWERKING -> ZIE 'VERWERKINGSVOORSCHRIFTEN' !
INFO COMPLEMENTAIRE PREPARATION/USINAGE -> VOIR 'PRESCRIPTIONS DE MISE EN OEUVRE' !
ADDITIONAL INFO PREPARATION/PROCESSING -> SEE 'PROCESSING DATA' !
ZUSAETZLICHE INFO VORBEREITUNG/VERARBEITUNG -> SIEHE 'VERARBEITUNGSVORSCHRIFTEN' !

BIJKOMENDE INFO VOORBEREIDING/VERWERKING -> ZIE 'VERWERKINGSVOORSCHRIFTEN' !
INFO COMPLEMENTAIRE PREPARATION/USINAGE -> VOIR 'PRESCRIPTIONS DE MISE EN OEUVRE' !
ADDITIONAL INFO PREPARATION/PROCESSING -> SEE 'PROCESSING DATA' !
ZUSAETZLICHE INFO VORBEREITUNG/VERARBEITUNG -> SIEHE 'VERARBEITUNGSVORSCHRIFTEN' !

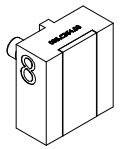

095.C300-01	
408.0125.XX	508.0125.XX
408.0136.XX	508.0136.XX
408.0160.XX	508.0160.XX
408.0169.XX	508.0169.XX
4F8.0169.XX	5F8.0169.XX
408.0183.XX	508.0183.XX
408.0236.XX	508.0236.XX
408.0283.XX	508.0283.XX
408.0715.XX	508.0825.XX
408.0790.XX	508.0826.XX
408.0825.XX	508.0936.XX
408.0826.XX	508.0983.XX
408.0936.XX	508.1140.XX
408.0983.XX	508.1142.XX
408.1140.XX	5F8.1142.XX
408.1142.XX	
4F8.1142.XX	

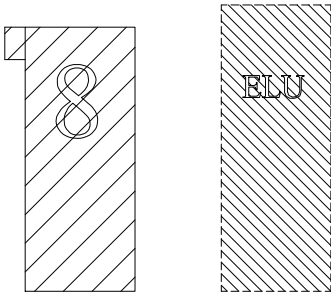

095.C364.00

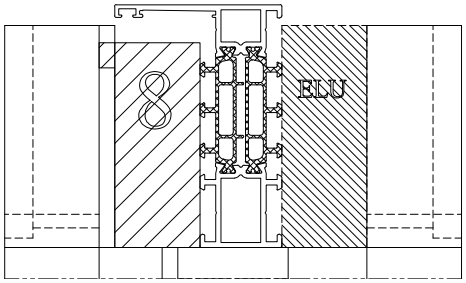

BIJKOMENDE INFO VOORBEREIDING/VERWERKING -> ZIE 'VERWERKINGSVOORSCHRIFTEN' !
INFO COMPLEMENTAIRE PREPARATION/USINAGE -> VOIR 'PRESCRIPTIONS DE MISE EN OEUVRE' !
ADDITIONAL INFO PREPARATION/PROCESSING -> SEE 'PROCESSING DATA' !
ZUSAETZLICHE INFO VORBEREITUNG/VERARBEITUNG -> SIEHE 'VERARBEITUNGSVORSCHRIFTEN' !

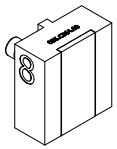

095.C300-04	
408.0102.XX	508.0102.XX
408.0192.XX	508.0192.XX
408.0202.XX	508.0202.XX
408.0292.XX	508.0292.XX
408.0902.XX	508.0902.XX
408.0992.XX	508.0992.XX
408.0541.XX	
408.1541.XX	

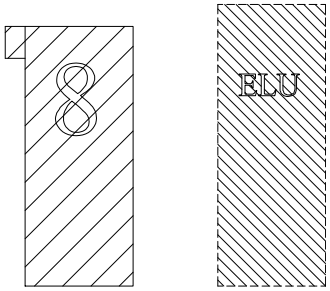

095.C364.00

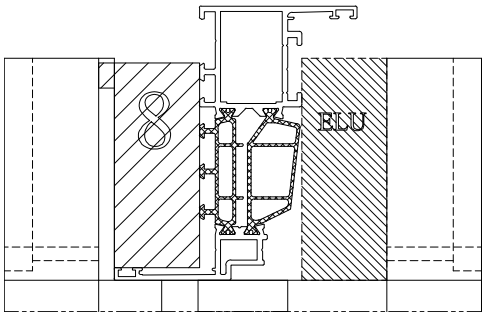

BIJKOMENDE INFO VOORBEREIDING/VERWERKING -> ZIE 'VERWERKINGSVOORSCHRIFTEN' !
INFO COMPLEMENTAIRE PREPARATION/USINAGE -> VOIR 'PRESCRIPTIONS DE MISE EN OEUVRE' !
ADDITIONAL INFO PREPARATION/PROCESSING -> SEE 'PROCESSING DATA' !
ZUSAETZLICHE INFO VORBEREITUNG/VERARBEITUNG -> SIEHE 'VERARBEITUNGSVORSCHRIFTEN' !

095.C300-05	
408.0112.XX	508.0112.XX
408.0212.XX	508.0212.XX
408.0266.XX	508.0912.XX
408.0912.XX	

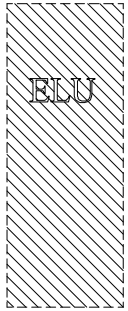

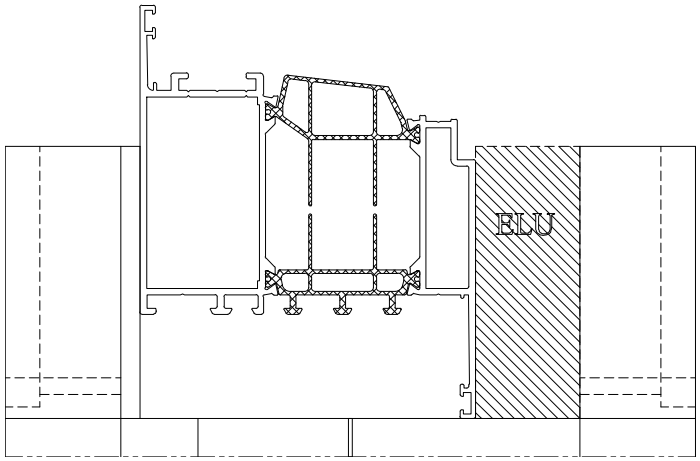

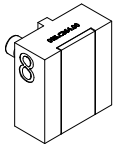

095.C300-03	
108.0862.39	508.0890.XX
408.0890.XX	508.0892.XX
408.0892.XX	508.0894.XX
408.0894.XX	508.1891.XX
408.1891.XX	508.1896.XX
408.1896.XX	5F8.1896.XX
4F8.1896.XX	

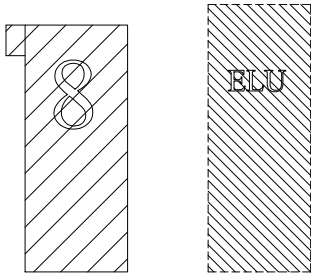

095.C364.00

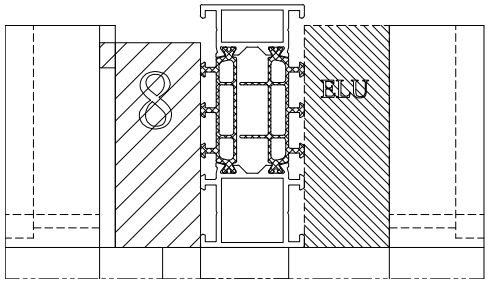

BIJKOMENDE INFO VOORBEREIDING/VERWERKING -> ZIE 'VERWERKINGSVOORSCHRIFTEN' !
INFO COMPLEMENTAIRE PREPARATION/USINAGE -> VOIR 'PRESCRIPTIONS DE MISE EN OEUVRE' !
ADDITIONAL INFO PREPARATION/PROCESSING -> SEE 'PROCESSING DATA' !
ZUSAETZLICHE INFO VORBEREITUNG/VERARBEITUNG -> SIEHE 'VERARBEITUNGSVORSCHRIFTEN' !

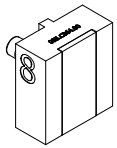

095.C300-02	
408.0186.XX	508.0186.XX
408.0442.XX	508.0442.XX
408.0443.XX	508.0443.XX
408.0444.XX	508.0444.XX
408.0452.XX	
408.0453.XX	
408.0454.XX	

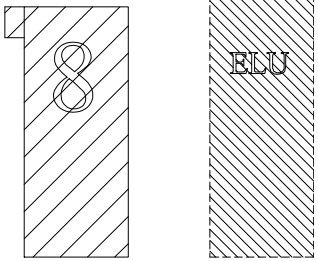

095.C364.00

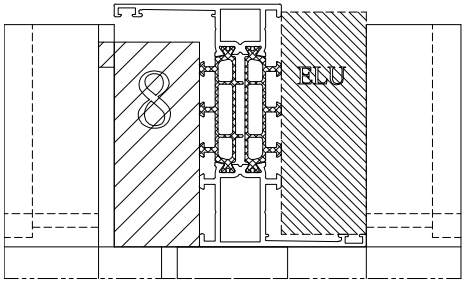

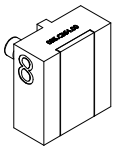

095.C300-01	
408.0125.XX	508.0125.XX
408.0136.XX	508.0136.XX
408.0160.XX	508.0160.XX
408.0169.XX	508.0169.XX
4F8.0169.XX	5F8.0169.XX
408.0183.XX	508.0183.XX
408.0236.XX	508.0236.XX
408.0283.XX	508.0283.XX
408.0715.XX	508.0825.XX
408.0790.XX	508.0826.XX
408.0825.XX	508.0936.XX
408.0826.XX	508.0983.XX
408.0936.XX	508.1140.XX
408.0983.XX	508.1142.XX
408.1140.XX	5F8.1142.XX
408.1142.XX	
4F8.1142.XX	

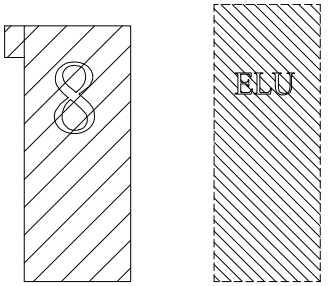

095.C364.00

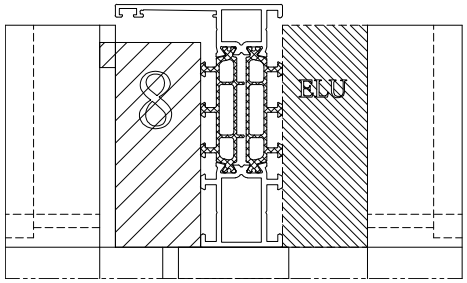

BIJKOMENDE INFO VOORBEREIDING/VERWERKING -> ZIE 'VERWERKINGSVOORSCHRIFTEN' !
INFO COMPLEMENTAIRE PREPARATION/USINAGE -> VOIR 'PRESCRIPTIONS DE MISE EN OEUVRE' !
ADDITIONAL INFO PREPARATION/PROCESSING -> SEE 'PROCESSING DATA' !
ZUSAETZLICHE INFO VORBEREITUNG/VERARBEITUNG -> SIEHE 'VERARBEITUNGSVORSCHRIFTEN' !

095.C300-06	
408.0041.XX	508.1051.XX
408.1051.XX	5F8.1051.XX
4F8.1051.XX	508.1251.XX
408.1251.XX	5F8.1251.XX
4F8.1251.XX	508.1951.XX
408.1951.XX	5F8.1951.XX
4F8.1951.XX	

ELU

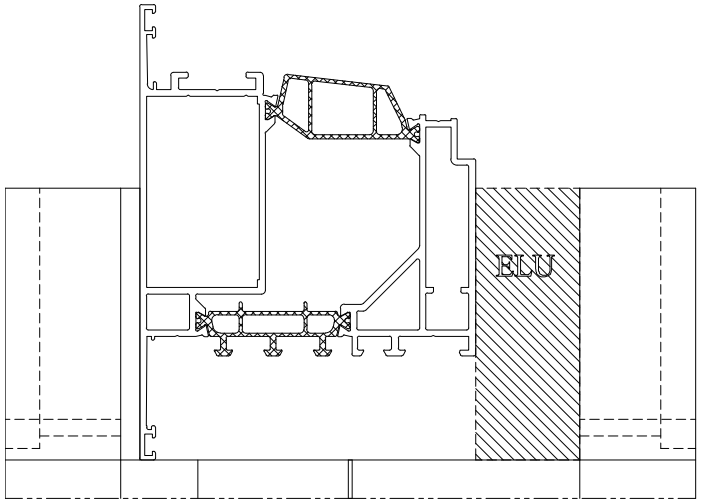

BIJKOMENDE INFO VOORBEREIDING/VERWERKING -> ZIE 'VERWERKINGSVOORSCHRIFTEN' !
INFO COMPLEMENTAIRE PREPARATION/USINAGE -> VOIR 'PRESCRIPTIONS DE MISE EN OEUVRE' !
ADDITIONAL INFO PREPARATION/PROCESSING -> SEE 'PROCESSING DATA' !
ZUSAETZLICHE INFO VORBEREITUNG/VERARBEITUNG -> SIEHE 'VERARBEITUNGSVORSCHRIFTEN' !

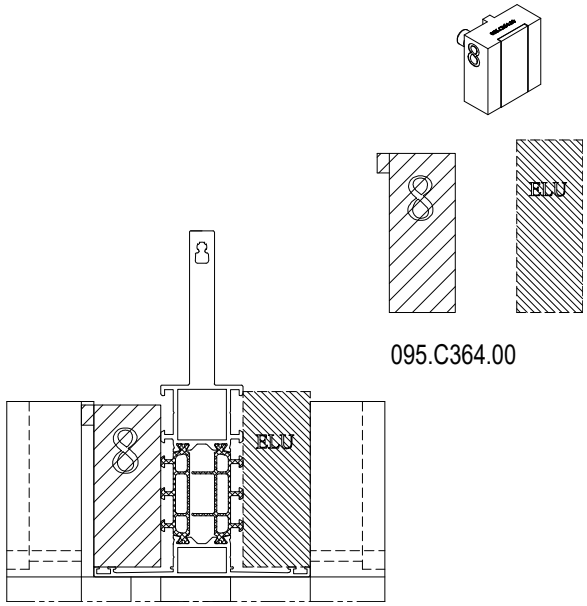

095.C364.00

BIJKOMENDE INFO VOORBEREIDING/VERWERKING -> ZIE 'VERWERKINGSVOORSCHRIFTEN' !
INFO COMPLEMENTAIRE PREPARATION/USINAGE -> VOIR 'PRESCRIPTIONS DE MISE EN OEUVRE' !
ADDITIONAL INFO PREPARATION/PROCESSING -> SEE 'PROCESSING DATA' !
ZUSAETZLICHE INFO VORBEREITUNG/VERARBEITUNG -> SIEHE 'VERARBEITUNGSVORSCHRIFTEN' !

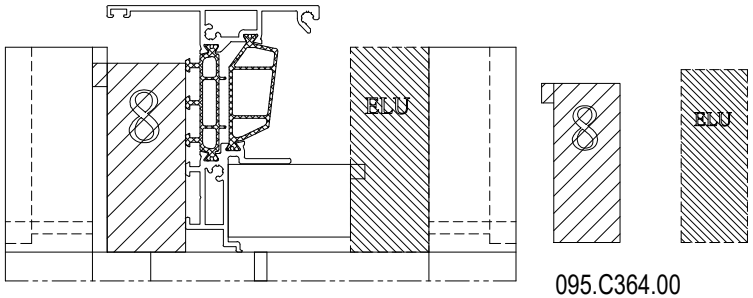

095.C364.00



095.C354.00*

BIJKOMENDE INFO VOORBEREIDING/VERWERKING -> ZIE 'VERWERKINGSVOORSCHRIFTEN' !
INFO COMPLEMENTAIRE PREPARATION/USINAGE -> VOIR 'PRESCRIPTIONS DE MISE EN OEUVRE' !
ADDITIONAL INFO PREPARATION/PROCESSING -> SEE 'PROCESSING DATA' !
ZUSAETZLICHE INFO VORBEREITUNG/VERARBEITUNG -> SIEHE 'VERARBEITUNGSVORSCHRIFTEN' !

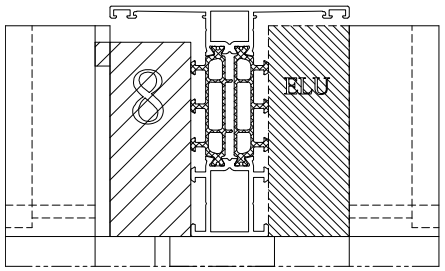

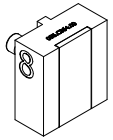

095.C300-07	
408.0010.XX	508.0010.XX
4K8.0010.XX	508.0011.XX
408.0011.XX	508.0113.XX
4K8.0011.XX	508.0114.XX
408.0113.XX	508.0120.XX
4K8.0113.XX	508.0165.XX
408.0114.XX	508.0213.XX
4K8.0114.XX	508.0220.XX
408.0120.XX	508.0815.XX
4K8.0120.XX	508.0913.XX
408.0165.XX	508.0920.XX
408.0213.XX	508.1116.XX
408.0220.XX	5F8.1116.XX
408.0438.XX	508.1123.XX
408.0439.XX	5F8.1123.XX
408.0815.XX	508.1850.XX
408.0913.XX	508.1851.XX
408.0920.XX	508.1852.XX
408.1116.XX	508.1853.XX
4F8.1116.XX	508.1854.XX
408.1123.XX	508.1855.XX
4F8.1123.XX	508.1856.XX
408.1850.XX	
4K8.1850.XX	
408.1851.XX	
4K8.1851.XX	
408.1852.XX	
4K8.1852.XX	
408.1853.XX	
4K8.1853.XX	
408.1854.XX	
4K8.1854.XX	
408.1855.XX	
4K8.1855.XX	
408.1856.XX	
4K8.1856.XX	

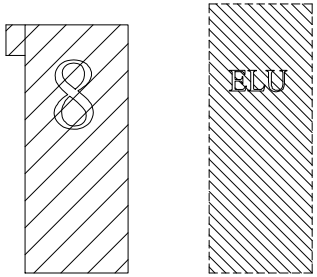

095.C364.00

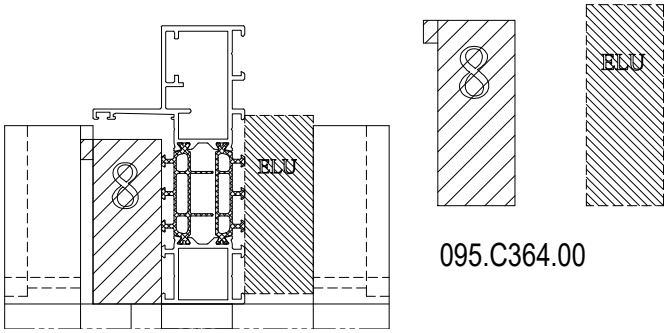

095.C364.00

BIJKOMENDE INFO VOORBEREIDING/VERWERKING -> ZIE 'VERWERKINGSVOORSCHRIFTEN' !
INFO COMPLEMENTAIRE PREPARATION/USINAGE -> VOIR 'PRESCRIPTIONS DE MISE EN OEUVRE' !
ADDITIONAL INFO PREPARATION/PROCESSING -> SEE 'PROCESSING DATA' !
ZUSAETZLICHE INFO VORBEREITUNG/VERARBEITUNG -> SIEHE 'VERARBEITUNGSVORSCHRIFTEN' !



095.C300-11	
408.0100.XX	508.0100.XX
408.0109.XX	508.0109.XX
408.0110.XX	508.0110.XX
408.0117.XX	508.0117.XX
408.0119.XX	508.0119.XX
408.3100.XX	508.3100.XX
408.3109.XX	508.3109.XX
408.3110.XX	508.3110.XX
408.3180.XX	508.3180.XX

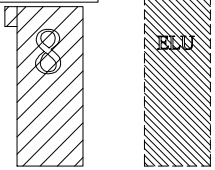

095.C364.00

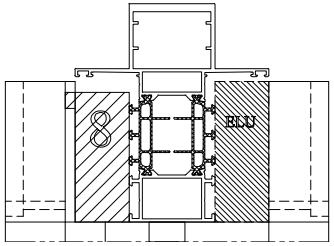

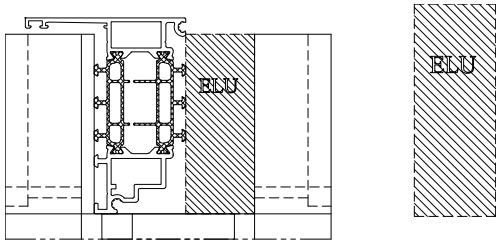
BLU
BLU

BIJKOMENDE INFO VOORBEREIDING/VERWERKING -> ZIE 'VERWERKINGSVOORSCHRIFTEN' !
INFO COMPLEMENTAIRE PREPARATION/USINAGE -> VOIR 'PRESCRIPTIONS DE MISE EN OEUVRE' !
ADDITIONAL INFO PREPARATION/PROCESSING -> SEE 'PROCESSING DATA' !
ZUSAETZLICHE INFO VORBEREITUNG/VERARBEITUNG -> SIEHE 'VERARBEITUNGSVORSCHRIFTEN' !

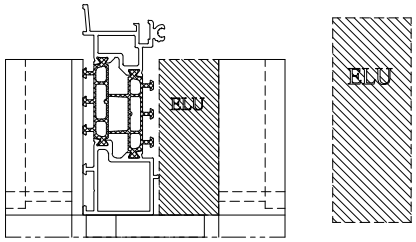

BIJKOMENDE INFO VOORBEREIDING/VERWERKING -> ZIE 'VERWERKINGSVOORSCHRIFTEN' !
INFO COMPLEMENTAIRE PREPARATION/USINAGE -> VOIR 'PRESCRIPTIONS DE MISE EN OEUVRE' !
ADDITIONAL INFO PREPARATION/PROCESSING -> SEE 'PROCESSING DATA' !
ZUSAETZLICHE INFO VORBEREITUNG/VERARBEITUNG -> SIEHE 'VERARBEITUNGSVORSCHRIFTEN' !



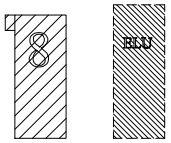

095.C364.00

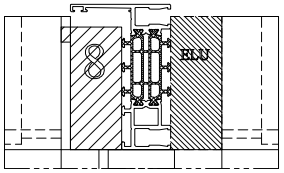

BIJKOMENDE INFO VOORBEREIDING/VERWERKING -> ZIE 'VERWERKINGSVOORSCHRIFTEN' !
INFO COMPLEMENTAIRE PREPARATION/USINAGE -> VOIR 'PRESCRIPTIONS DE MISE EN OEUVRE' !
ADDITIONAL INFO PREPARATION/PROCESSING -> SEE 'PROCESSING DATA' !
ZUSAETZLICHE INFO VORBEREITUNG/VERARBEITUNG -> SIEHE 'VERARBEITUNGSVORSCHRIFTEN' !

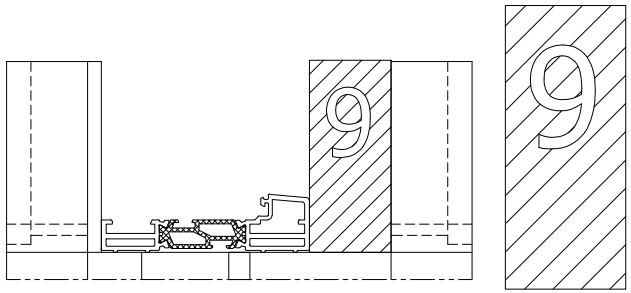

095.C365.00

BIJKOMENDE INFO VOORBEREIDING/VERWERKING -> ZIE 'VERWERKINGSVOORSCHRIFTEN' !
INFO COMPLEMENTAIRE PREPARATION/USINAGE -> VOIR 'PRESCRIPTIONS DE MISE EN OEUVRE' !
ADDITIONAL INFO PREPARATION/PROCESSING -> SEE 'PROCESSING DATA' !
ZUSAETZLICHE INFO VORBEREITUNG/VERARBEITUNG -> SIEHE 'VERARBEITUNGSVORSCHRIFTEN' !

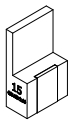

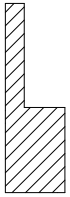

095.C372.00

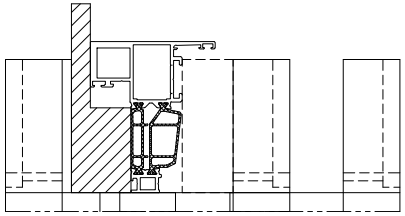

BIJKOMENDE INFO VOORBEREIDING/VERWERKING -> ZIE 'VERWERKINGSVOORSCHRIFTEN' !
INFO COMPLEMENTAIRE PREPARATION/USINAGE -> VOIR 'PRESCRIPTIONS DE MISE EN OEUVRE' !
ADDITIONAL INFO PREPARATION/PROCESSING -> SEE 'PROCESSING DATA' !
ZUSAETZLICHE INFO VORBEREITUNG/VERARBEITUNG -> SIEHE 'VERARBEITUNGSVORSCHRIFTEN' !

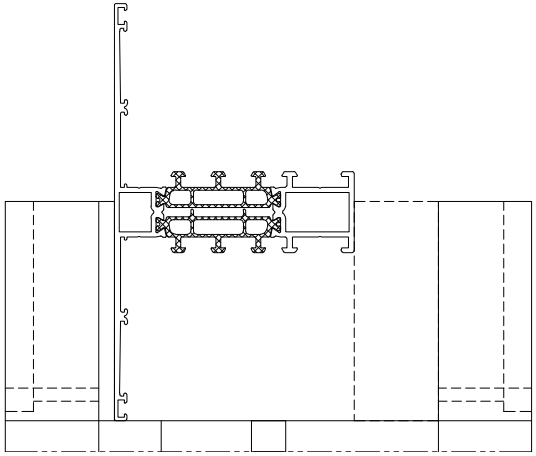

BIJKOMENDE INFO VOORBEREIDING/VERWERKING -> ZIE 'VERWERKINGSVOORSCHRIFTEN' !
INFO COMPLEMENTAIRE PREPARATION/USINAGE -> VOIR 'PRESCRIPTIONS DE MISE EN OEUVRE' !
ADDITIONAL INFO PREPARATION/PROCESSING -> SEE 'PROCESSING DATA' !
ZUSAETZLICHE INFO VORBEREITUNG/VERARBEITUNG -> SIEHE 'VERARBEITUNGSVORSCHRIFTEN' !

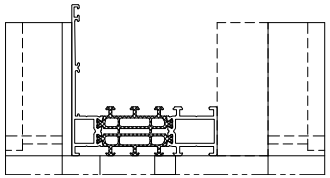

BIJKOMENDE INFO VOORBEREIDING/VERWERKING -> ZIE 'VERWERKINGSVOORSCHRIFTEN' !
INFO COMPLEMENTAIRE PREPARATION/USINAGE -> VOIR 'PRESCRIPTIONS DE MISE EN OEUVRE' !
ADDITIONAL INFO PREPARATION/PROCESSING -> SEE 'PROCESSING DATA' !
ZUSAETZLICHE INFO VORBEREITUNG/VERARBEITUNG -> SIEHE 'VERARBEITUNGSVORSCHRIFTEN' !

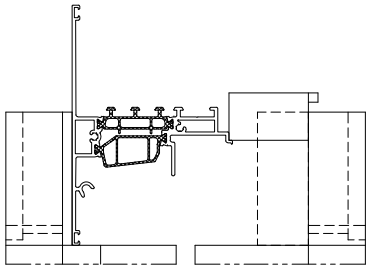



095.C354.00*

BIJKOMENDE INFO VOORBEREIDING/VERWERKING -> ZIE 'VERWERKINGSVOORSCHRIFTEN' !
INFO COMPLEMENTAIRE PREPARATION/USINAGE -> VOIR 'PRESCRIPTIONS DE MISE EN OEUVRE' !
ADDITIONAL INFO PREPARATION/PROCESSING -> SEE 'PROCESSING DATA' !
ZUSAETZLICHE INFO VORBEREITUNG/VERARBEITUNG -> SIEHE 'VERARBEITUNGSVORSCHRIFTEN' !

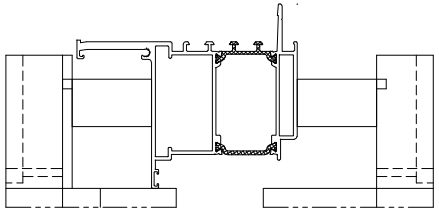



095.C354.00*

BIJKOMENDE INFO VOORBEREIDING/VERWERKING -> ZIE 'VERWERKINGSVOORSCHRIFTEN' !
INFO COMPLEMENTAIRE PREPARATION/USINAGE -> VOIR 'PRESCRIPTIONS DE MISE EN OEUVRE' !
ADDITIONAL INFO PREPARATION/PROCESSING -> SEE 'PROCESSING DATA' !
ZUSAETZLICHE INFO VORBEREITUNG/VERARBEITUNG -> SIEHE 'VERARBEITUNGSVORSCHRIFTEN' !

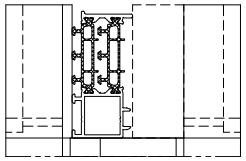

BIJKOMENDE INFO VOORBEREIDING/VERWERKING -> ZIE 'VERWERKINGSVOORSCHRIFTEN' !
INFO COMPLEMENTAIRE PREPARATION/USINAGE -> VOIR 'PRESCRIPTIONS DE MISE EN OEUVRE' !
ADDITIONAL INFO PREPARATION/PROCESSING -> SEE 'PROCESSING DATA' !
ZUSAETZLICHE INFO VORBEREITUNG/VERARBEITUNG -> SIEHE 'VERARBEITUNGSVORSCHRIFTEN' !

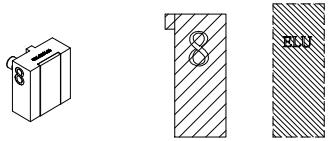

095.C364.00

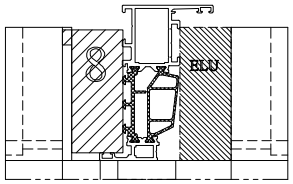

BIJKOMENDE INFO VOORBEREIDING/VERWERKING -> ZIE 'VERWERKINGSVOORSCHRIFTEN' !
INFO COMPLEMENTAIRE PREPARATION/USINAGE -> VOIR 'PRESCRIPTIONS DE MISE EN OEUVRE' !
ADDITIONAL INFO PREPARATION/PROCESSING -> SEE 'PROCESSING DATA' !
ZUSAETZLICHE INFO VORBEREITUNG/VERARBEITUNG -> SIEHE 'VERARBEITUNGSVORSCHRIFTEN' !

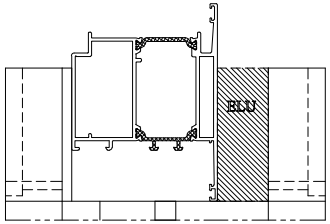

BIJKOMENDE INFO VOORBEREIDING/VERWERKING -> ZIE 'VERWERKINGSVOORSCHRIFTEN' !
INFO COMPLEMENTAIRE PREPARATION/USINAGE -> VOIR 'PRESCRIPTIONS DE MISE EN OEUVRE' !
ADDITIONAL INFO PREPARATION/PROCESSING -> SEE 'PROCESSING DATA' !
ZUSAETZLICHE INFO VORBEREITUNG/VERARBEITUNG -> SIEHE 'VERARBEITUNGSVORSCHRIFTEN' !

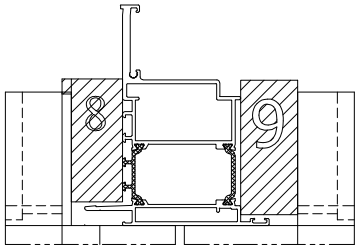

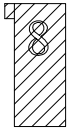

095.C364.00



095.C365.00

BIJKOMENDE INFO VOORBEREIDING/VERWERKING -> ZIE 'VERWERKINGSVOORSCHRIFTEN' !
INFO COMPLEMENTAIRE PREPARATION/USINAGE -> VOIR 'PRESCRIPTIONS DE MISE EN OEUVRE' !
ADDITIONAL INFO PREPARATION/PROCESSING -> SEE 'PROCESSING DATA' !
ZUSAETZLICHE INFO VORBEREITUNG/VERARBEITUNG -> SIEHE 'VERARBEITUNGSVORSCHRIFTEN' !





095.C354.00*

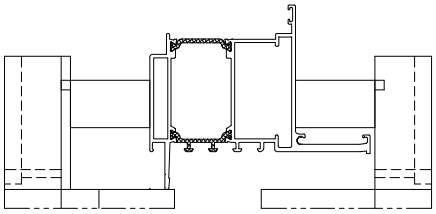

BIJKOMENDE INFO VOORBEREIDING/VERWERKING -> ZIE 'VERWERKINGSVOORSCHRIFTEN' !
INFO COMPLEMENTAIRE PREPARATION/USINAGE -> VOIR 'PRESCRIPTIONS DE MISE EN OEUVRE' !
ADDITIONAL INFO PREPARATION/PROCESSING -> SEE 'PROCESSING DATA' !
ZUSAETZLICHE INFO VORBEREITUNG/VERARBEITUNG -> SIEHE 'VERARBEITUNGSVORSCHRIFTEN' !

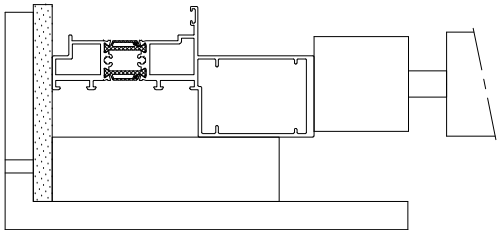

BIJKOMENDE INFO VOORBEREIDING/VERWERKING -> ZIE 'VERWERKINGSVOORSCHRIFTEN' !
INFO COMPLEMENTAIRE PREPARATION/USINAGE -> VOIR 'PRESCRIPTIONS DE MISE EN OEUVRE' !
ADDITIONAL INFO PREPARATION/PROCESSING -> SEE 'PROCESSING DATA' !
ZUSAETZLICHE INFO VORBEREITUNG/VERARBEITUNG -> SIEHE 'VERARBEITUNGSVORSCHRIFTEN' !

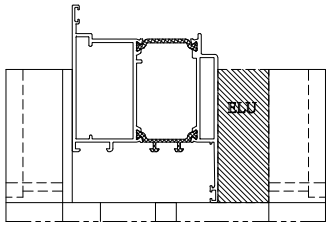

BIJKOMENDE INFO VOORBEREIDING/VERWERKING -> ZIE 'VERWERKINGSVOORSCHRIFTEN' !
INFO COMPLEMENTAIRE PREPARATION/USINAGE -> VOIR 'PRESCRIPTIONS DE MISE EN OEUVRE' !
ADDITIONAL INFO PREPARATION/PROCESSING -> SEE 'PROCESSING DATA' !
ZUSAETZLICHE INFO VORBEREITUNG/VERARBEITUNG -> SIEHE 'VERARBEITUNGSVORSCHRIFTEN' !

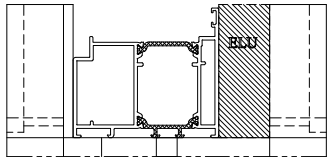

BIJKOMENDE INFO VOORBEREIDING/VERWERKING -> ZIE 'VERWERKINGSVOORSCHRIFTEN' !
INFO COMPLEMENTAIRE PREPARATION/USINAGE -> VOIR 'PRESCRIPTIONS DE MISE EN OEUVRE' !
ADDITIONAL INFO PREPARATION/PROCESSING -> SEE 'PROCESSING DATA' !
ZUSAETZLICHE INFO VORBEREITUNG/VERARBEITUNG -> SIEHE 'VERARBEITUNGSVORSCHRIFTEN' !

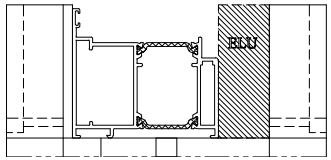

COPY ROUTER CLAMP

CLAMP BLOCKS MILLING MACHINE T-JONCTION 095.AKF6.00 | 095.F250.00

MASTERLINE 8-Fu

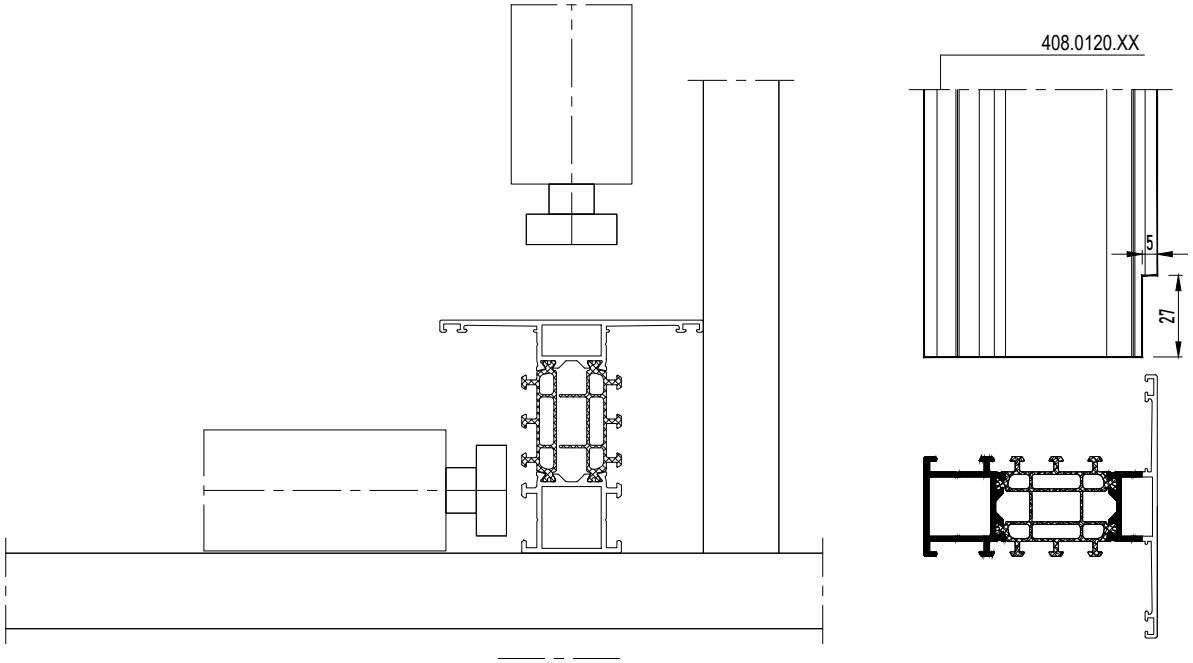

BIJKOMENDE INFO VOORBEREIDING/VERWERKING -> ZIE HOOFDSTUK 'HARDWARE CONFIGURATOR' !
INFO COMPLEMENTAIRE PREPARATION/USINAGE -> VOIR " HARDWARE CONFIGURATOR " !
ADDITIONAL INFO PREPARATION/PROCESSING -> SEE " HARDWARE CONFIGURATOR " !
ZUSAETZLICHE INFO VORBEREITUNG/VERARBEITUNG -> SIEHE " HARDWARE CONFIGURATOR " !

COPY ROUTER CLAMP

CLAMP BLOCKS MILLING MACHINE T-JONCTION 095.AKF6.00 | 095.B129.00

MASTERLINE 8-Fu

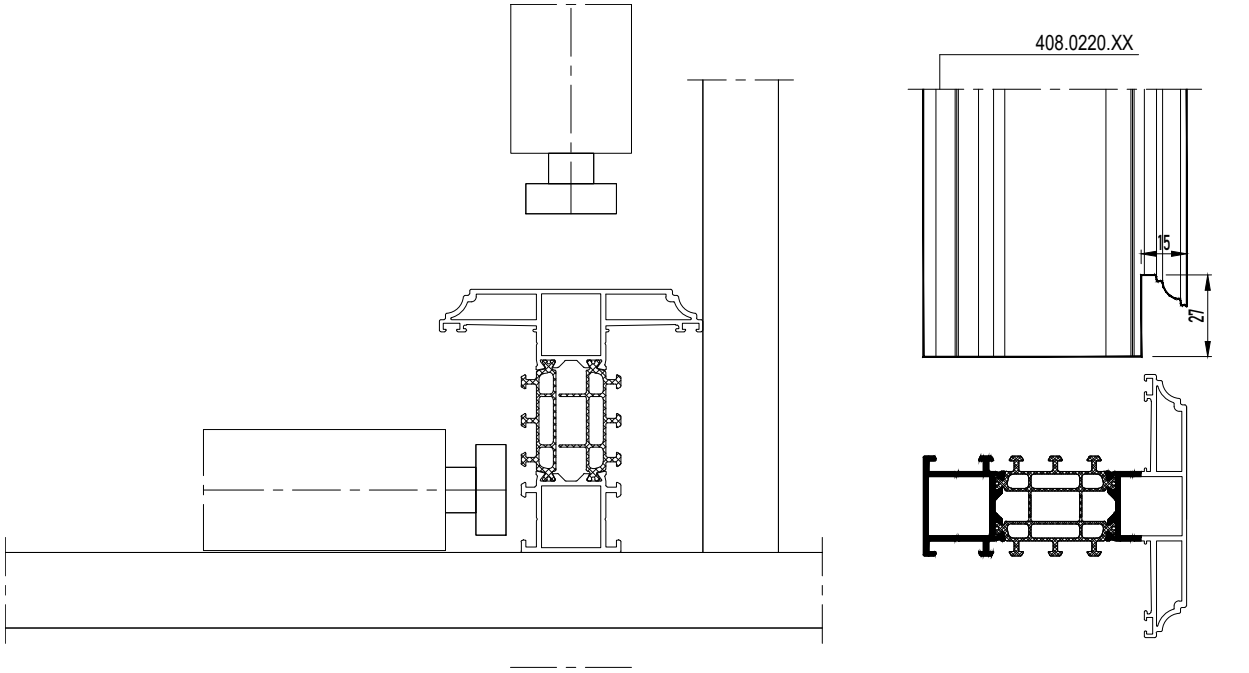

BIJKOMENDE INFO VOORBEREIDING/VERWERKING -> ZIE HOOFDSTUK 'HARDWARE CONFIGURATOR' !
INFO COMPLEMENTAIRE PREPARATION/USINAGE -> VOIR " HARDWARE CONFIGURATOR " !
ADDITIONAL INFO PREPARATION/PROCESSING -> SEE " HARDWARE CONFIGURATOR " !
ZUSAETZLICHE INFO VORBEREITUNG/VERARBEITUNG -> SIEHE " HARDWARE CONFIGURATOR " !

COPY ROUTER CLAMP

CLAMP BLOCKS MILLING MACHINE T-JONCTION 095.AKF6.00 | 095.D130.00

MASTERLINE 8-Fu

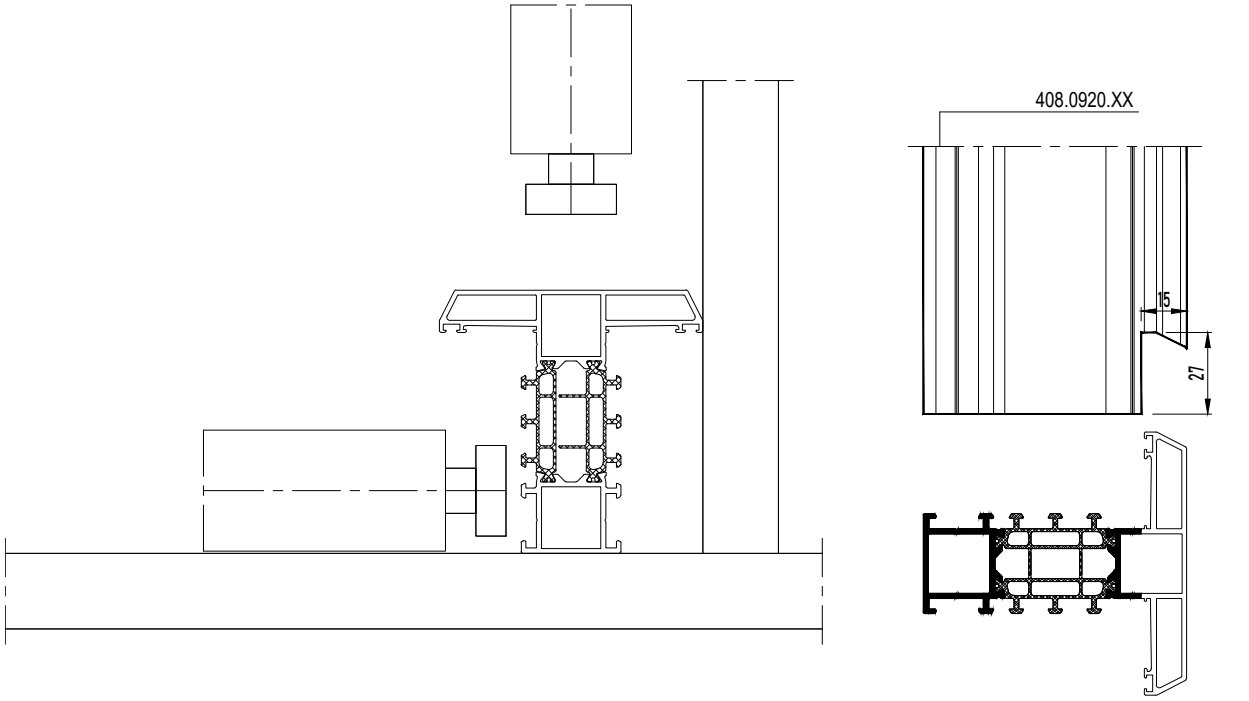

BIJKOMENDE INFO VOORBEREIDING/VERWERKING -> ZIE HOOFDSTUK 'HARDWARE CONFIGURATOR' !
INFO COMPLEMENTAIRE PREPARATION/USINAGE -> VOIR " HARDWARE CONFIGURATOR " !
ADDITIONAL INFO PREPARATION/PROCESSING -> SEE " HARDWARE CONFIGURATOR " !
ZUSAETZLICHE INFO VORBEREITUNG/VERARBEITUNG -> SIEHE " HARDWARE CONFIGURATOR " !

COPY ROUTER CLAMP

CLAMP BLOCKS MILLING MACHINE T-JONCTION 095.AKF6.00 | 095.B133.00

MASTERLINE 8-Fu

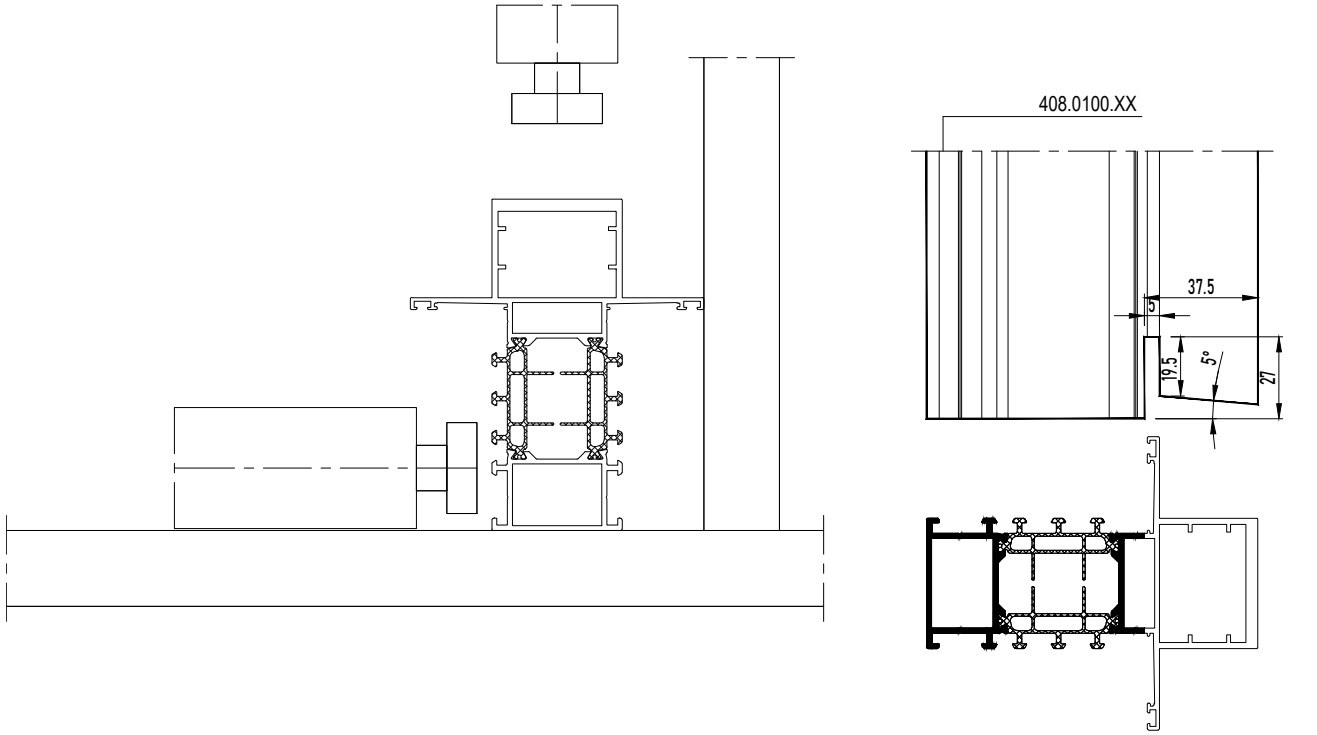

BIJKOMENDE INFO VOORBEREIDING/VERWERKING -> ZIE HOOFDSTUK 'HARDWARE CONFIGURATOR' !
INFO COMPLEMENTAIRE PREPARATION/USINAGE -> VOIR " HARDWARE CONFIGURATOR " !
ADDITIONAL INFO PREPARATION/PROCESSING -> SEE " HARDWARE CONFIGURATOR " !
ZUSAETZLICHE INFO VORBEREITUNG/VERARBEITUNG -> SIEHE " HARDWARE CONFIGURATOR " !

COPY ROUTER CLAMP

CLAMP BLOCKS MILLING MACHINE T-JONCTION 095.AKF6.00 | 095.F250.00

MASTERLINE 8-Fu

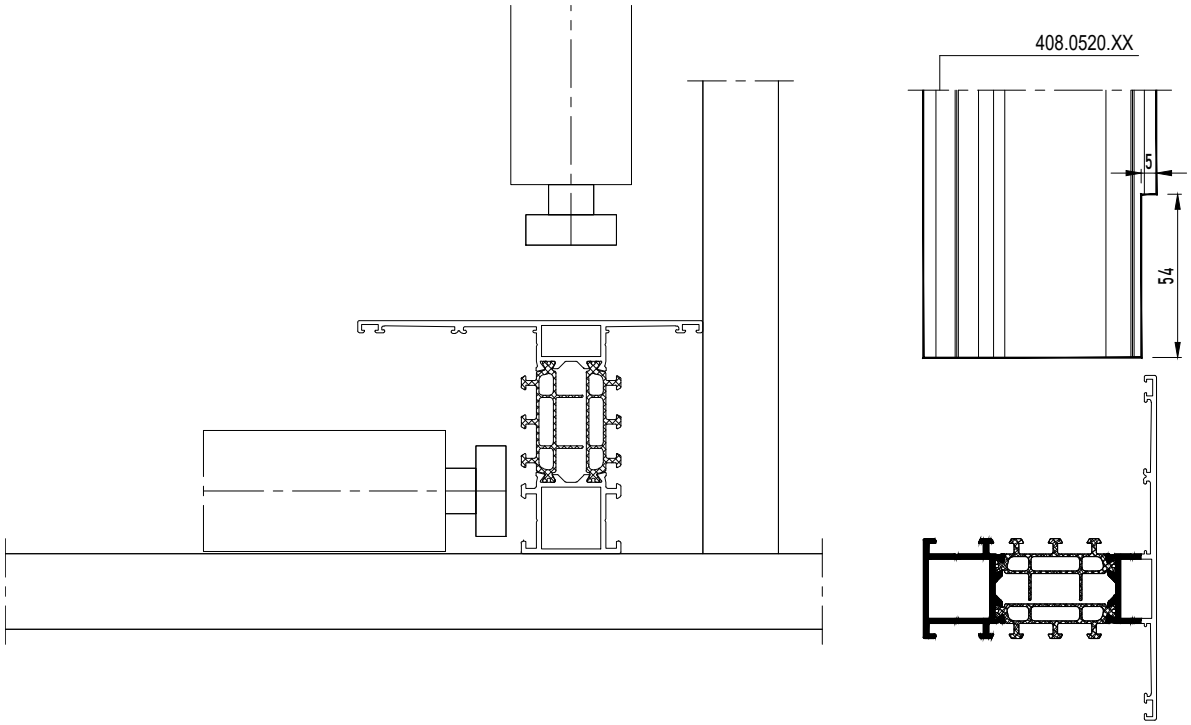

BIJKOMENDE INFO VOORBEREIDING/VERWERKING -> ZIE HOOFDSTUK 'HARDWARE CONFIGURATOR' !
INFO COMPLEMENTAIRE PREPARATION/USINAGE -> VOIR " HARDWARE CONFIGURATOR " !
ADDITIONAL INFO PREPARATION/PROCESSING -> SEE " HARDWARE CONFIGURATOR " !
ZUSAETZLICHE INFO VORBEREITUNG/VERARBEITUNG -> SIEHE " HARDWARE CONFIGURATOR " !

COPY ROUTER CLAMP

CLAMP BLOCKS MILLING MACHINE T-JONCTION 095.AKF6.00 | 095.F250.00

MASTERLINE 8-Fu



095.B132.00

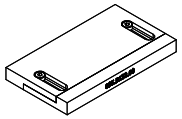

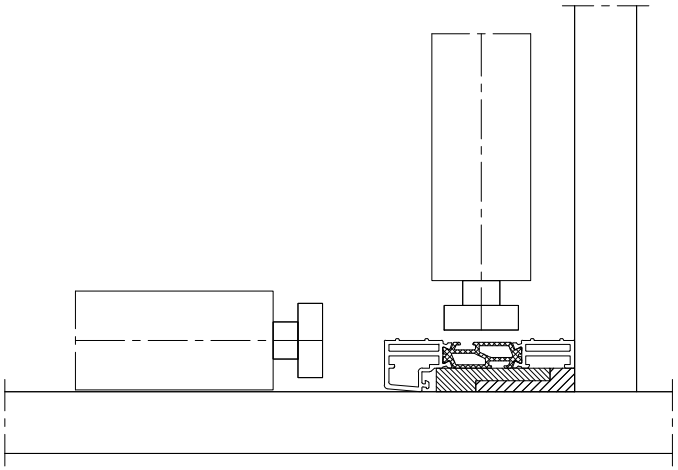

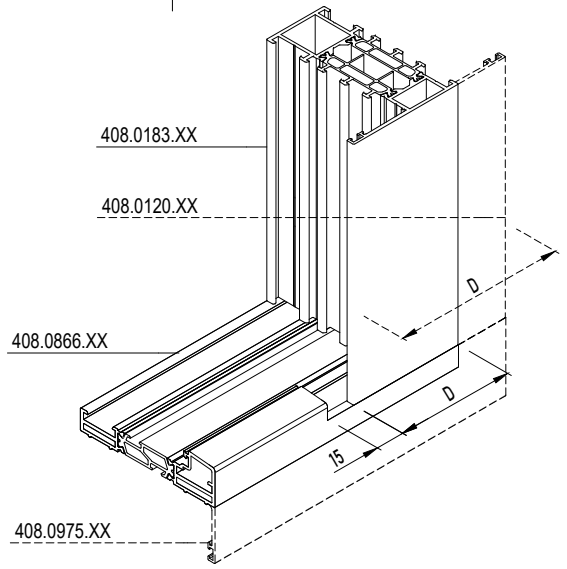

BUITENKADER DORMANT OUTER FRAME BLENDRAHMEN	1 FREZING 408.0866.XX FRAISAGE 408.0866.XX MILLING 408.0866.XX FRAESUNG 408.0866.XX	T-VERBINDER JONCTION-T T-BRACKET T-VERBINDER
408.0183.XX	D + 15	168.8732.00
408.0160.XX	D + 15	168.8733.00
408.0125.XX	D + 15	168.8734.00

BIJKOMENDE INFO VOORBEREIDING/VERWERKING -> ZIE HOOFDSTUK 'HARDWARE CONFIGURATOR' !
INFO COMPLEMENTAIRE PREPARATION/USINAGE -> VOIR " HARDWARE CONFIGURATOR " !
ADDITIONAL INFO PREPARATION/PROCESSING -> SEE " HARDWARE CONFIGURATOR " !
ZUSAETZLICHE INFO VORBEREITUNG/VERARBEITUNG -> SIEHE " HARDWARE CONFIGURATOR " !

T SCREW MC

T-BRACKET WITH SCREW

MASTERLINE 8-Fu

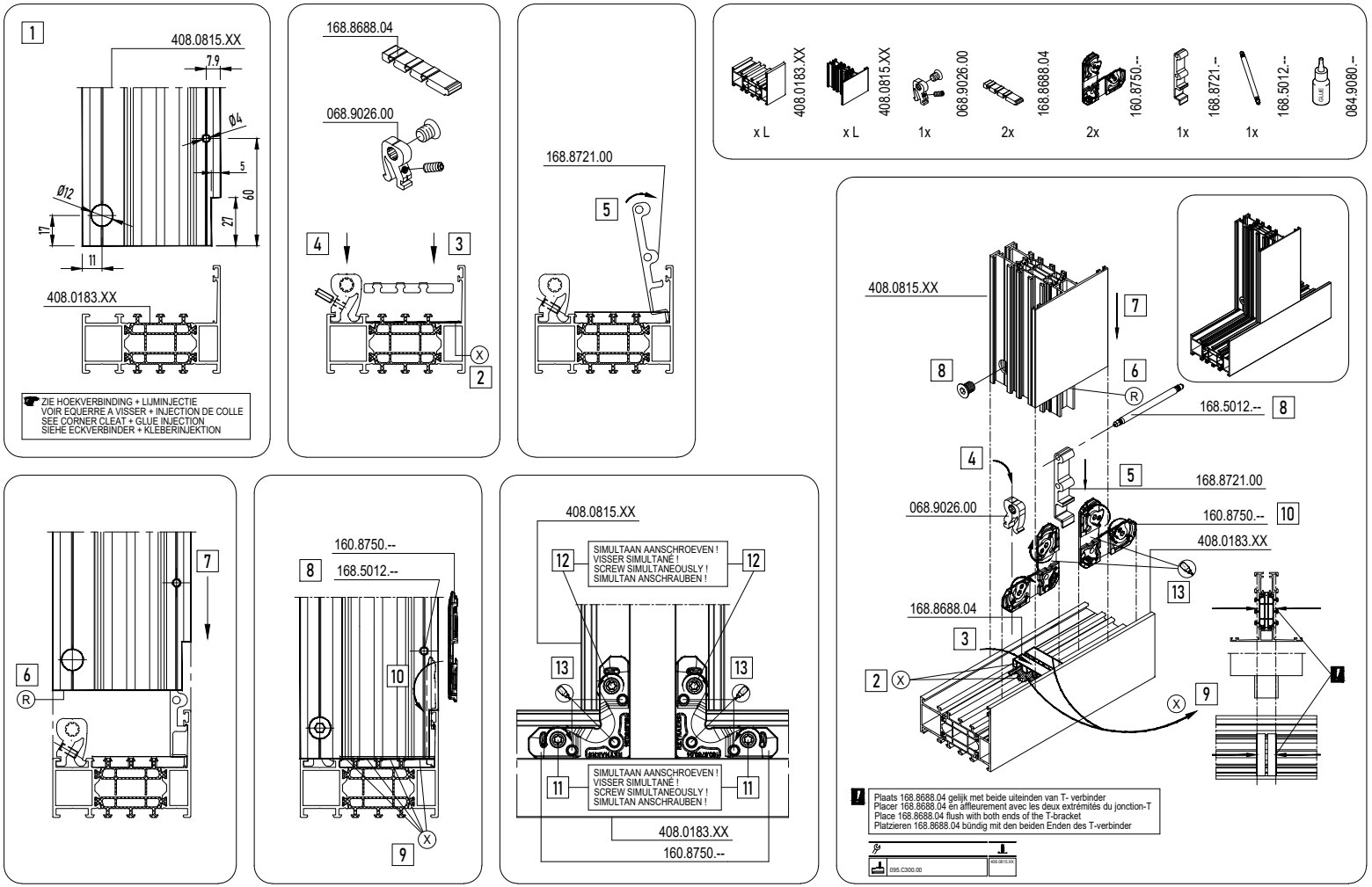

T SCREW MC VENT

T-BRACKET WITH SCREW

MASTERLINE 8-Fu

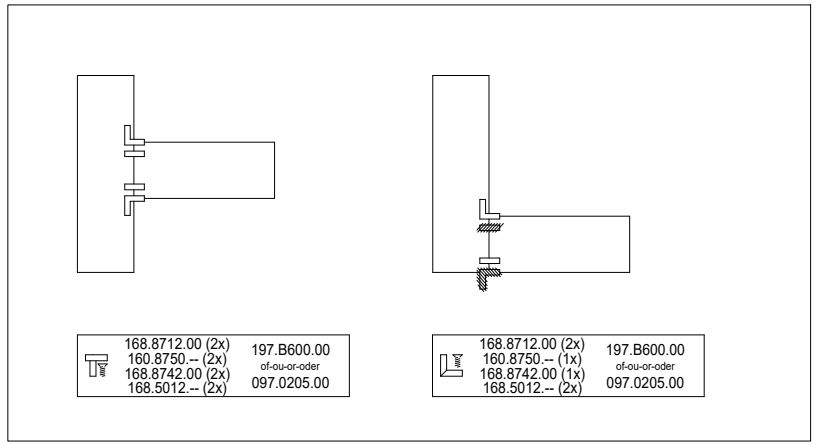

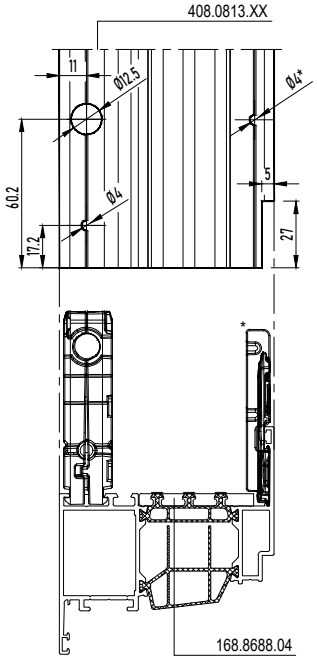

*

OPTIE / OPTION

niet vereist voor alle profielen
pas nécessaire pour tout les profils
not required for all profiles
nicht für alle Profile erforderlich

REYNASEAL DUO
REYNASEAL DUO
REYNASEAL DUO
REYNASEAL DUO

REYNAPROTECTOR
REYNAPROTECTOR
REYNAPROTECTOR
REYNAPROTECTOR

DICHTINGSMIDDEL
MATIERE D'ETANCHEITE
SEALING AGENT
ABDICHTUNG

MONTAGEVOLGORDE
L'ORDRE DE MONTAGE
THE ORDER OF ASSEMBLY
MONTAGEREIHENFOLGE
1 2 3 .

BIJKOMENDE INFO VOORBEREIDING/VERWERKING -> ZIE " HARDWARE CONFIGURATOR " !
INFO COMPLEMENTAIRE PREPARATION/USINAGE -> VOIR " HARDWARE CONFIGURATOR " !
ADDITIONAL INFO PREPARATION/PROCESSING -> SEE " HARDWARE CONFIGURATOR " !
ZUSAETZLICHE INFO VORBEREITUNG/VERARBEITUNG -> SIEHE " HARDWARE CONFIGURATOR " !

T SCREW MC VENT

T-BRACKET WITH SCREW

MASTERLINE 8-Fu

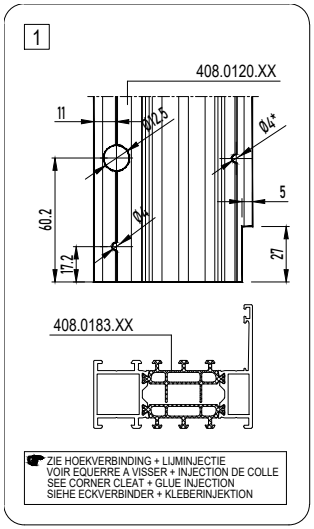

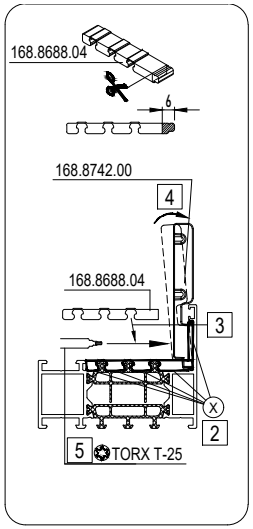

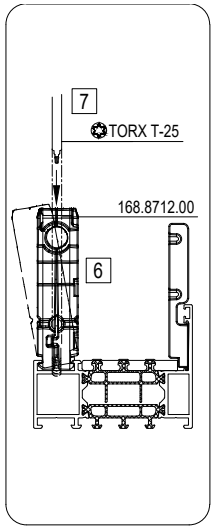

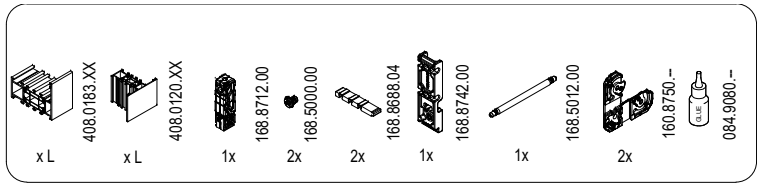

*
OPTIE / OPTION

niet vereist voor alle profielen

pas nécessaire pour tout les profils

not required for all profiles

nicht für alle Profile erforderlich

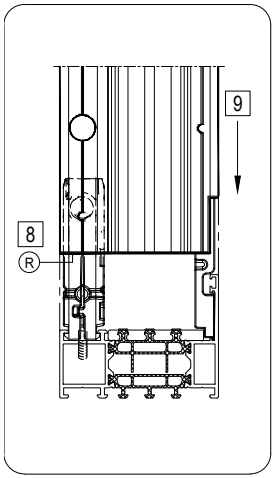

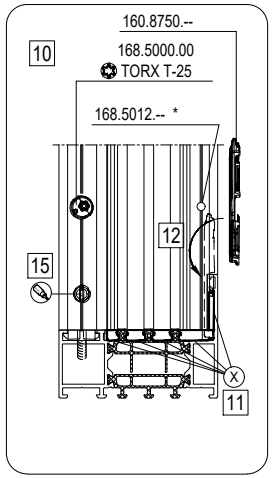

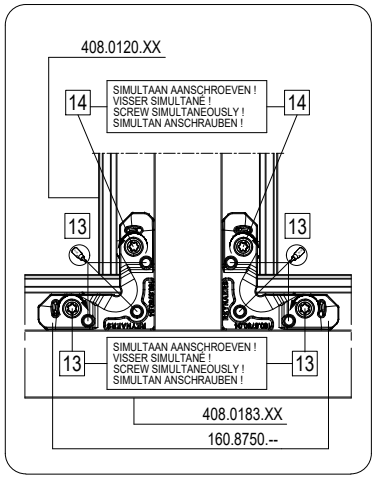

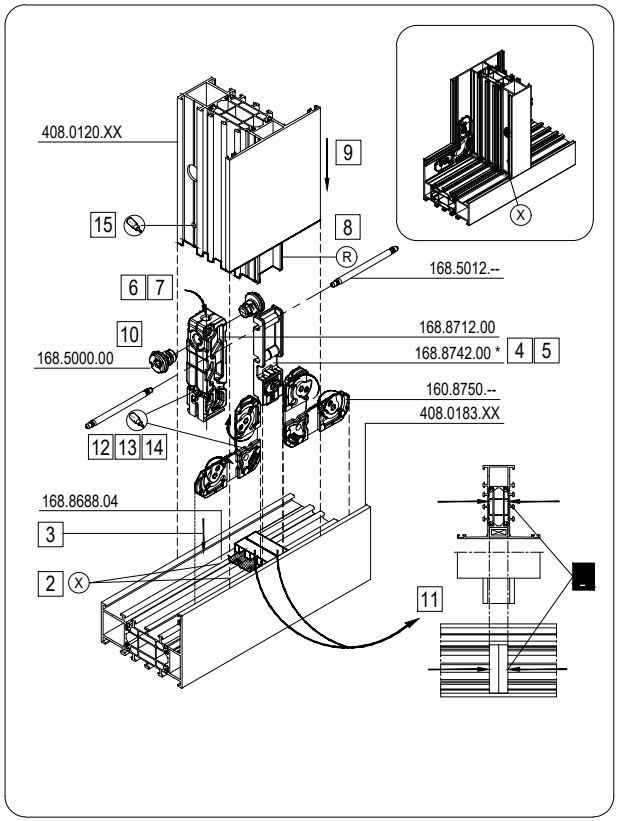

800kg	Max. draaggewicht per set 800kg Poids de portée maximale par set 800kg Maximal bearing weight per set 800kg Maximales Traggewicht pro Satz 800kg
250kg	Max. draaggewicht per set 250kg Poids de portée maximale par set 250kg Maximal bearing weight per set 250kg Maximales Traggewicht pro Satz 250kg

168.8712.00 NOT GLUED:	
350kg	Max. draaggewicht per set 350kg Poids de portée maximale par set 350kg Maximal bearing weight per set 350kg Maximales Traggewicht pro Satz 350kg
200kg	Max. draaggewicht per set 200kg Poids de portée maximale par set 200kg Maximal bearing weight per set 200kg Maximales Traggewicht pro Satz 200kg

T SCREW MC

T-BRACKET WITH SCREW

MASTERLINE 8-Fu

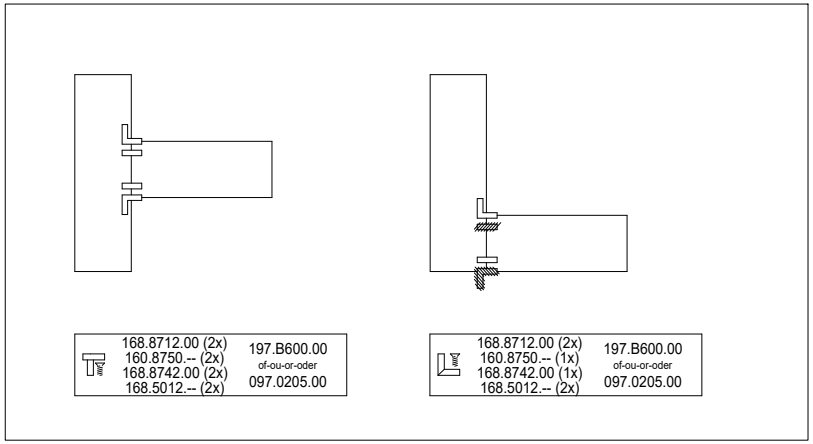

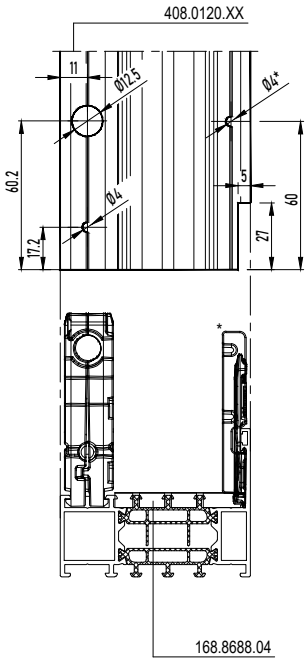

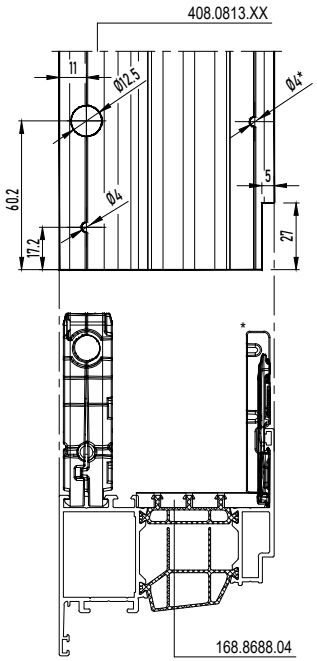

*
OPTIE / OPTION

niet vereist voor alle profielen
pas nécessaire pour tout les profils
not required for all profiles
nicht für alle Profile erforderlich

REYNASEAL DUO
REYNASEAL DUO
REYNASEAL DUO
REYNASEAL DUO

REYNAPROTECTOR
REYNAPROTECTOR
REYNAPROTECTOR
REYNAPROTECTOR

DICHTINGSMIDDEL
MATIERE D'ETANCHEITE
SEALING AGENT
ABDICHTUNG

MONTAGEVOLGORDE
L'ORDRE DE MONTAGE
THE ORDER OF ASSEMBLY
MONTAGEREIHENFOLGE
1 2 3 .

BIJKOMENDE INFO VOORBEREIDING/VERWERKING -> ZIE " HARDWARE CONFIGURATOR " !
INFO COMPLEMENTAIRE PREPARATION/USINAGE -> VOIR " HARDWARE CONFIGURATOR " !
ADDITIONAL INFO PREPARATION/PROCESSING -> SEE " HARDWARE CONFIGURATOR " !
ZUSAETZLICHE INFO VORBEREITUNG/VERARBEITUNG -> SIEHE " HARDWARE CONFIGURATOR " !

T SCREW MC

T-BRACKET WITH SCREW

MASTERLINE 8-Fu

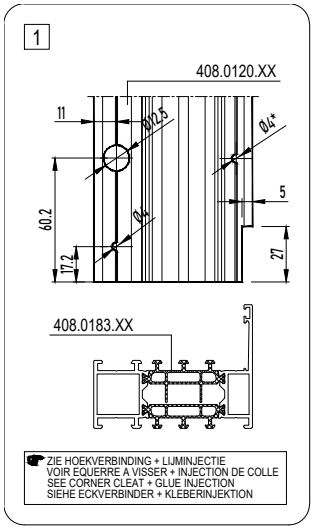

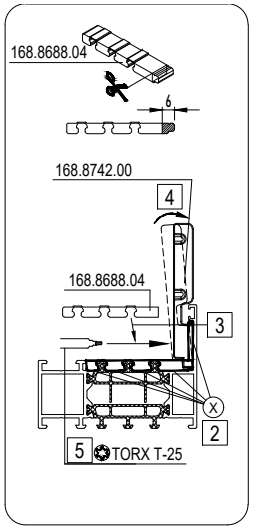

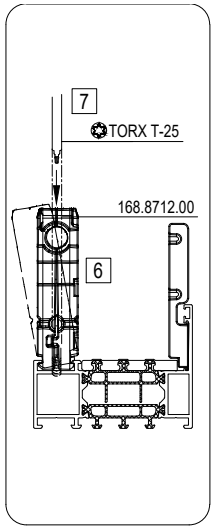

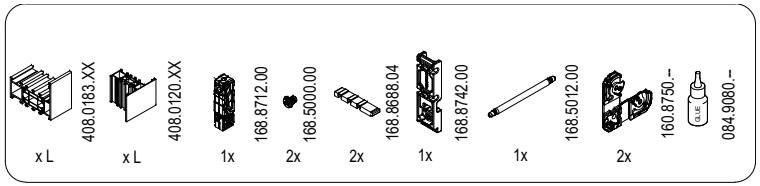

*
OPTIE / OPTION

niet vereist voor alle profielen

pas nécessaire pour tout les profils

not required for all profiles

nicht für alle Profile erforderlich

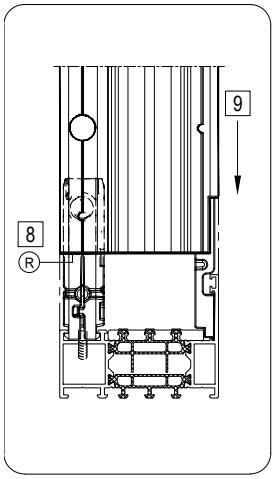

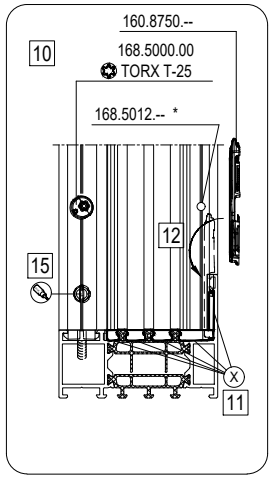

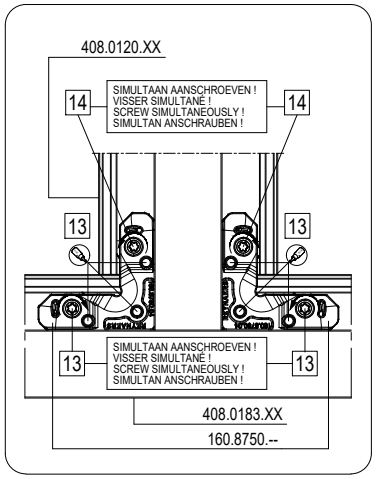

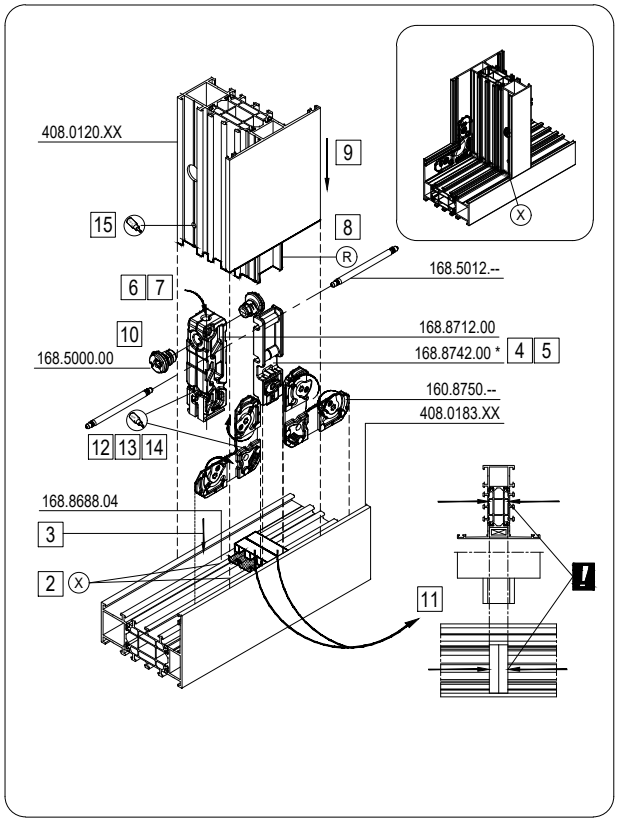

800kg	Max. draaggewicht per set 800kg Poids de portée maximale par set 800kg Maximal bearing weight per set 800kg Maximales Traggewicht pro Satz 800kg
250kg	Max. draaggewicht per set 250kg Poids de portée maximale par set 250kg Maximal bearing weight per set 250kg Maximales Traggewicht pro Satz 250kg

168.8712.00 NOT GLUED:	
350kg	Max. draaggewicht per set 350kg Poids de portée maximale par set 350kg Maximal bearing weight per set 350kg Maximales Traggewicht pro Satz 350kg
200kg	Max. draaggewicht per set 200kg Poids de portée maximale par set 200kg Maximal bearing weight per set 200kg Maximales Traggewicht pro Satz 200kg

T SCREW MFPT VENT

T-BRACKET WITH SCREW | 095.AFK6.00

MASTERLINE 8-Fu

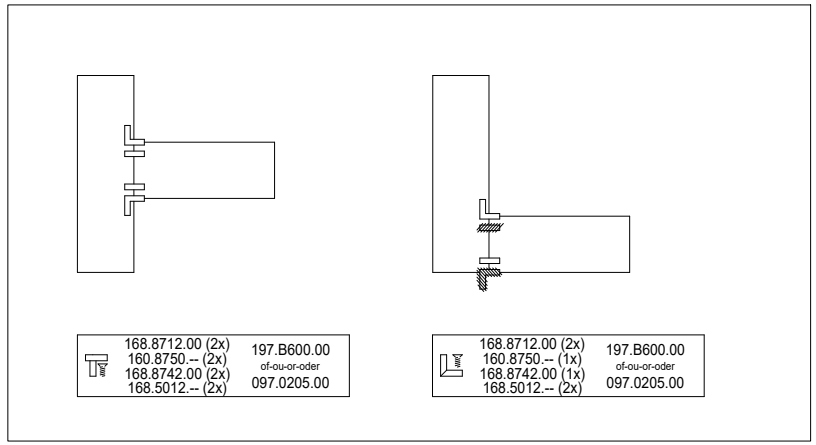

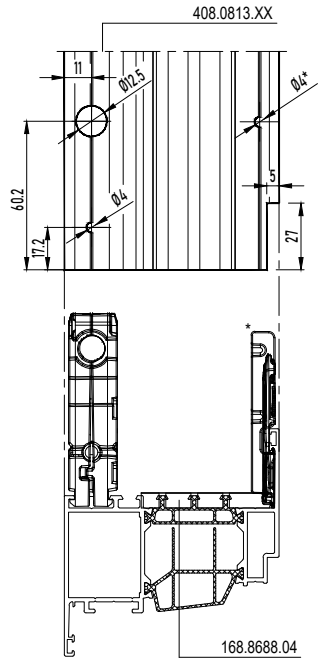

*
OPTIE / OPTION

niet vereist voor alle profielen
pas nécessaire pour tout les profils
not required for all profiles
nicht für alle Profile erforderlich

REYNASEAL DUO
REYNASEAL DUO
REYNASEAL DUO
REYNASEAL DUO

REYNAPROTECTOR
REYNAPROTECTOR
REYNAPROTECTOR
REYNAPROTECTOR

DICHTINGSMIDDEL
MATIERE D'ETANCHEITE
SEALING AGENT
ABDICHTUNG

MONTAGEVOLGORDE
L'ORDRE DE MONTAGE
THE ORDER OF ASSEMBLY
MONTAGEREIHENFOLGE
1 2 3 .

BIJKOMENDE INFO VOORBEREIDING/VERWERKING -> ZIE " HARDWARE CONFIGURATOR " !
INFO COMPLEMENTAIRE PREPARATION/USINAGE -> VOIR " HARDWARE CONFIGURATOR " !
ADDITIONAL INFO PREPARATION/PROCESSING -> SEE " HARDWARE CONFIGURATOR " !
ZUSAETZLICHE INFO VORBEREITUNG/VERARBEITUNG -> SIEHE " HARDWARE CONFIGURATOR " !

T SCREW MFPT VENT

T-BRACKET WITH SCREW | 095.AFK6.00

MASTERLINE 8-Fu

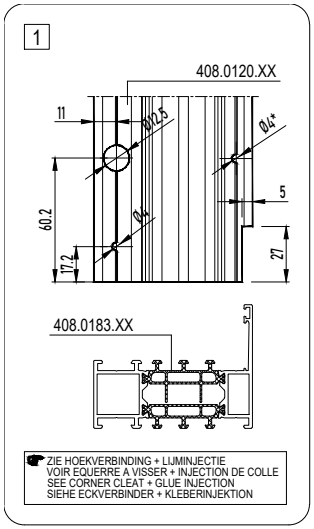

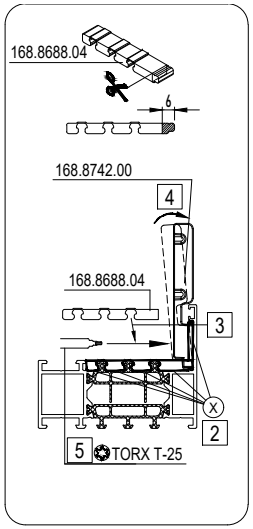

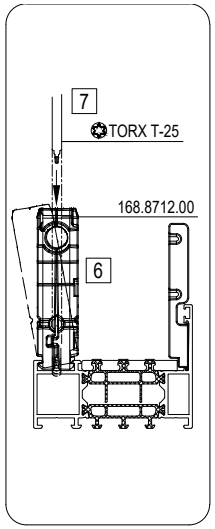

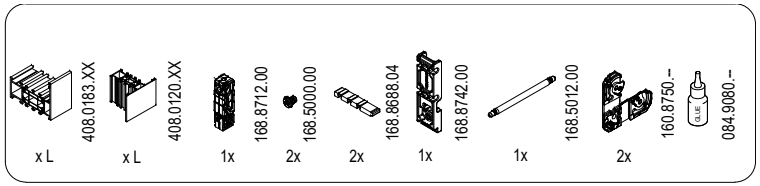

*
OPTIE / OPTION

niet vereist voor alle profielen

pas nécessaire pour tout les profils

not required for all profiles

nicht für alle Profile erforderlich

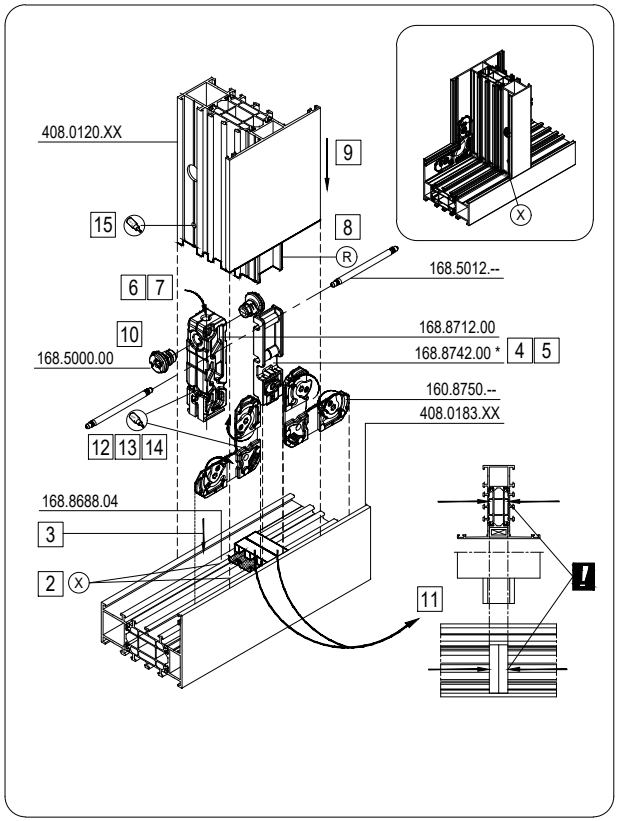

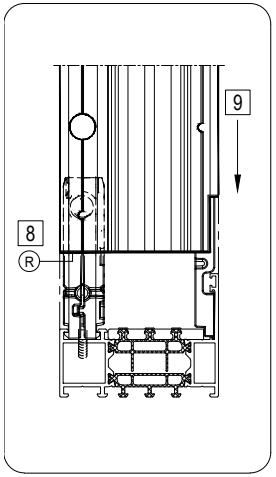

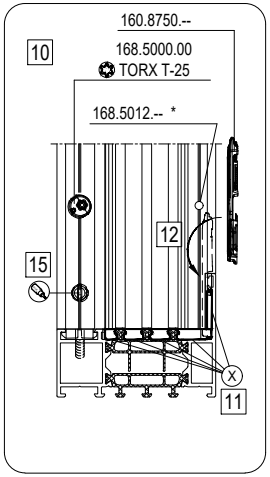

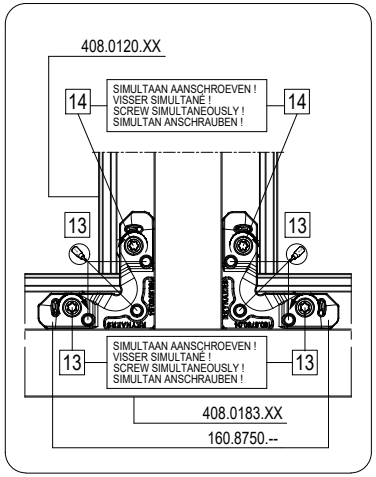



Max. draaggewicht per set 800kg
Poids de portée maximale par set 800kg
Maximal bearing weight per set 800kg
Maximales Traggewicht pro Satz 800kg



Max. draaggewicht per set 250kg
Poids de portée maximale par set 250kg
Maximal bearing weight per set 250kg
Maximales Traggewicht pro Satz 250kg

168.8712.00
NOT GLUED:



Max. draaggewicht per set 350kg
Poids de portée maximale par set 350kg
Maximal bearing weight per set 350kg
Maximales Traggewicht pro Satz 350kg



Max. draaggewicht per set 200kg
Poids de portée maximale par set 200kg
Maximal bearing weight per set 200kg
Maximales Traggewicht pro Satz 200kg

T SCREW MFPT

T-BRACKET WITH SCREW | 095.AKF6.00, 097.0183.00

MASTERLINE 8-Fu

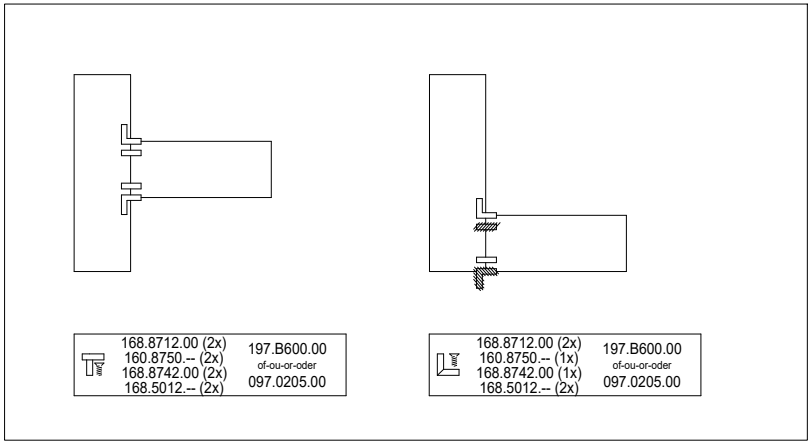

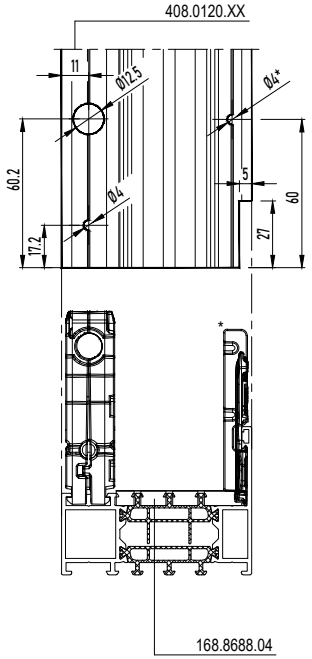



REYNASEAL DUO
REYNASEAL DUO
REYNASEAL DUO
REYNASEAL DUO

REYNAPROTECTOR
REYNAPROTECTOR
REYNAPROTECTOR
REYNAPROTECTOR

DICHTINGSMIDDEL
MATIERE D'ETANCHEITE
SEALING AGENT
ABDICHTUNG

MONTAGEVOLGORDE
L'ORDRE DE MONTAGE
THE ORDER OF ASSEMBLY
MONTAGEREIHENFOLGE
1 2 3 .

BIJKOMENDE INFO VOORBEREIDING/VERWERKING -> ZIE " HARDWARE CONFIGURATOR " !
INFO COMPLEMENTAIRE PREPARATION/USINAGE -> VOIR " HARDWARE CONFIGURATOR " !
ADDITIONAL INFO PREPARATION/PROCESSING -> SEE " HARDWARE CONFIGURATOR " !
ZUSAETZLICHE INFO VORBEREITUNG/VERARBEITUNG -> SIEHE " HARDWARE CONFIGURATOR " !

T SCREW MFPT

T-BRACKET WITH SCREW | 095.AKF6.00, 097.0183.00

MASTERLINE 8-Fu

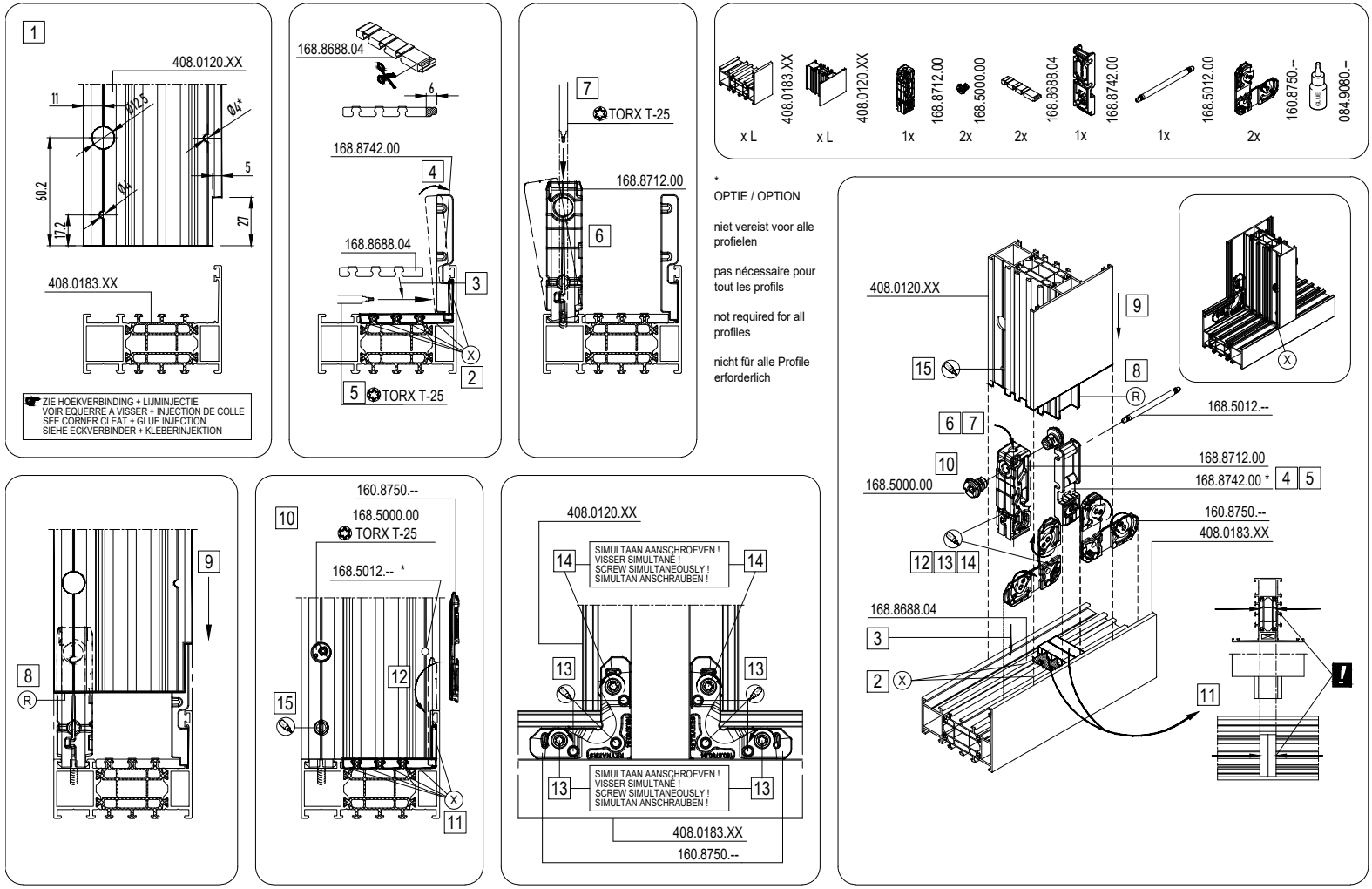

800kg	Max. draaggewicht per set 800kg Poids de portée maximale par set 800kg Maximal bearing weight per set 800kg Maximales Traggewicht pro Satz 800kg	250kg	Max. draaggewicht per set 250kg Poids de portée maximale par set 250kg Maximal bearing weight per set 250kg Maximales Traggewicht pro Satz 250kg	168.8712.00 NOT GLUED:	350kg Max. draaggewicht per set 350kg Poids de portée maximale par set 350kg Maximal bearing weight per set 350kg Maximales Traggewicht pro Satz 350kg	200kg	Max. draaggewicht per set 200kg Poids de portée maximale par set 200kg Maximal bearing weight per set 200kg Maximales Traggewicht pro Satz 200kg

T SCREW JIG VENT

T-BRACKET WITH SCREW

MASTERLINE 8-Fu

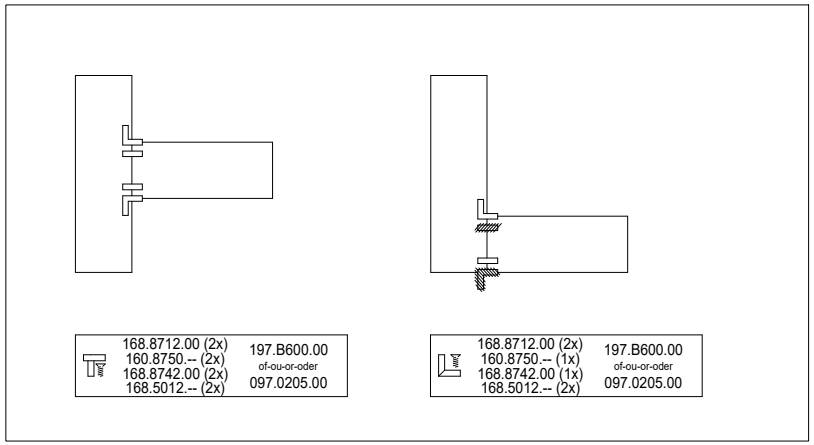

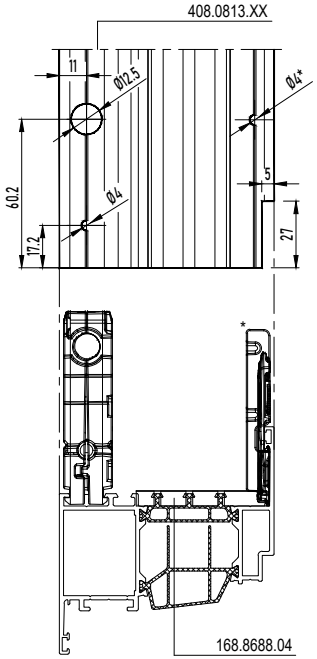

*

OPTIE / OPTION

niet vereist voor alle profielen
pas nécessaire pour tout les profils
not required for all profiles
nicht für alle Profile erforderlich

☛ CHAPTER C

REYNASEAL DUO
REYNASEAL DUO
REYNASEAL DUO
REYNASEAL DUO

REYNAPROTECTOR
REYNAPROTECTOR
REYNAPROTECTOR
REYNAPROTECTOR

DICHTINGSMIDDEL
MATIERE D'ETANCHEITE
SEALING AGENT
ABDICHTUNG

MONTAGEVOLGORDE
L'ORDRE DE MONTAGE
THE ORDER OF ASSEMBLY
MONTAGEREIHENFOLGE
1 2 3 .

BIJKOMENDE INFO VOORBEREIDING/VERWERKING -> ZIE " HARDWARE CONFIGURATOR " !
INFO COMPLEMENTAIRE PREPARATION/USINAGE -> VOIR " HARDWARE CONFIGURATOR " !
ADDITIONAL INFO PREPARATION/PROCESSING -> SEE " HARDWARE CONFIGURATOR " !
ZUSAETZLICHE INFO VORBEREITUNG/VERARBEITUNG -> SIEHE " HARDWARE CONFIGURATOR " !

T SCREW JIG VENT

T-BRACKET WITH SCREW

MASTERLINE 8-Fu

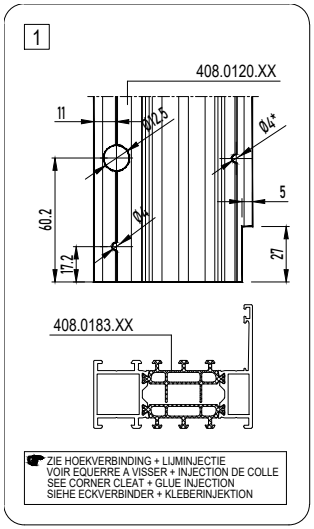

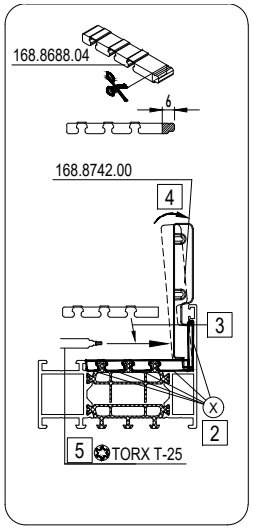

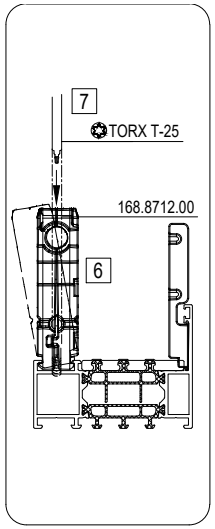

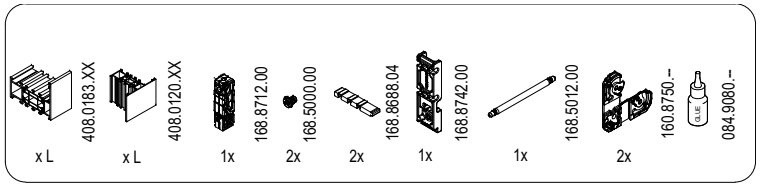

*
OPTIE / OPTION

niet vereist voor alle profielen

pas nécessaire pour tout les profils

not required for all profiles

nicht für alle Profile erforderlich

CHAPTER C

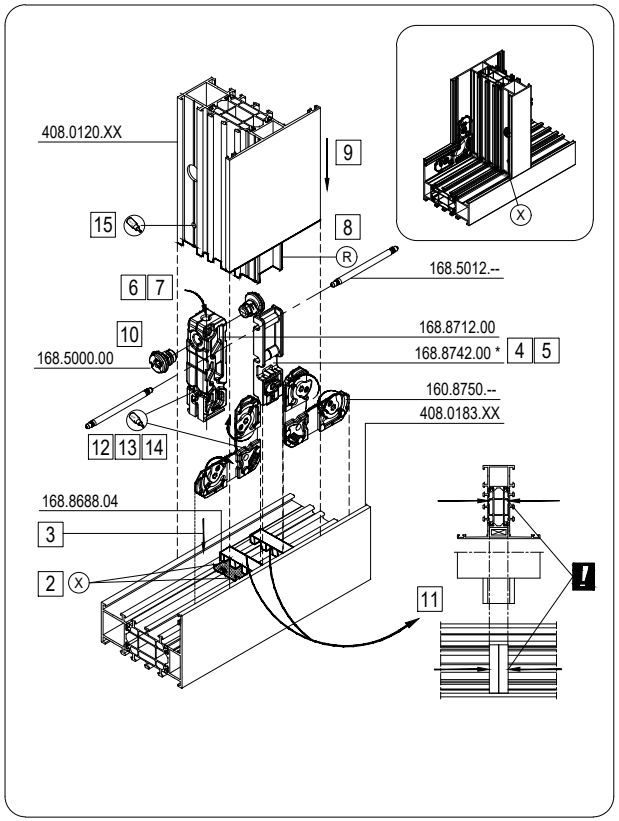

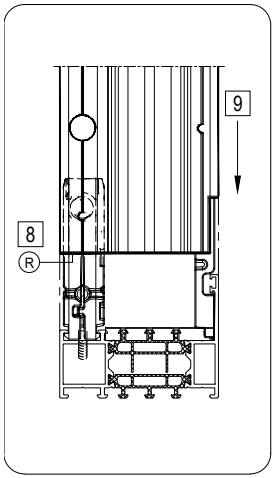

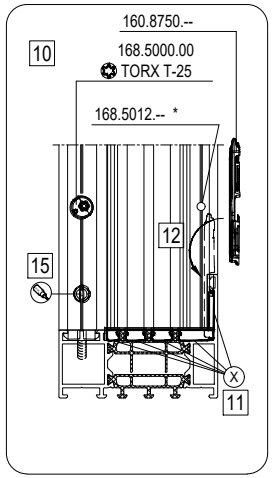

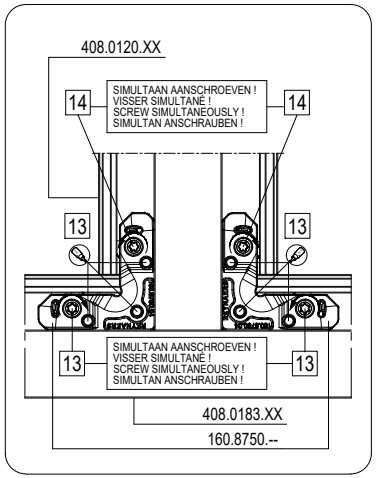

800kg	Max. draaggewicht per set 800kg Poids de portée maximale par set 800kg Maximal bearing weight per set 800kg Maximales Traggewicht pro Satz 800kg
250kg	Max. draaggewicht per set 250kg Poids de portée maximale par set 250kg Maximal bearing weight per set 250kg Maximales Traggewicht pro Satz 250kg

168.8712.00 NOT GLUED:	
350kg	Max. draaggewicht per set 350kg Poids de portée maximale par set 350kg Maximal bearing weight per set 350kg Maximales Traggewicht pro Satz 350kg
200kg	Max. draaggewicht per set 200kg Poids de portée maximale par set 200kg Maximal bearing weight per set 200kg Maximales Traggewicht pro Satz 200kg

T SCREW JIG

T-BRACKET WITH SCREW | 095.AKF6.00

MASTERLINE 8-Fu

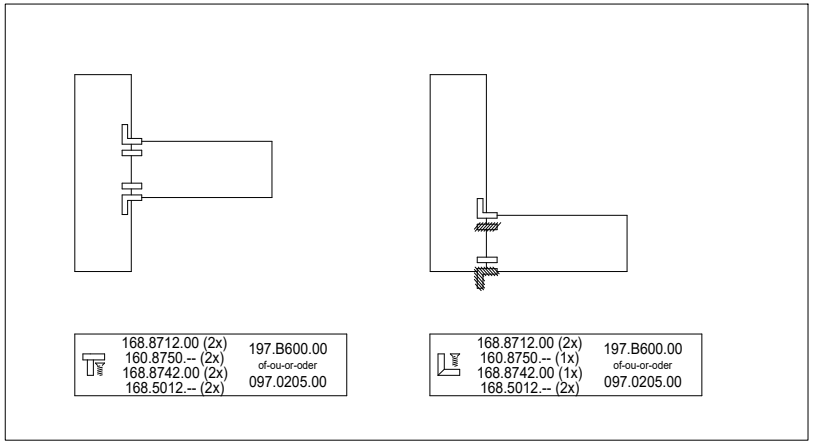

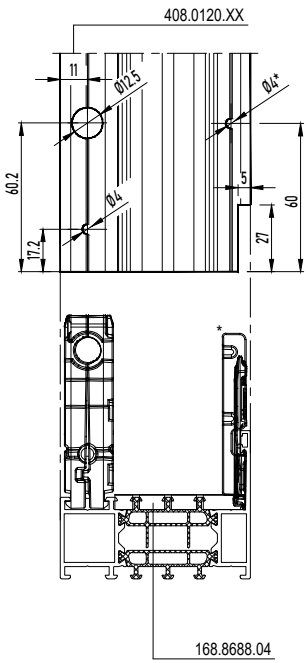

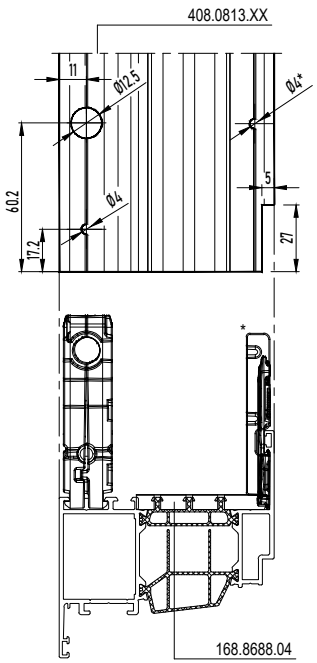

*
OPTIE / OPTION

niet vereist voor alle profielen
pas nécessaire pour tout les profils
not required for all profiles
nicht für alle Profile erforderlich

☛ CHAPTER C

REYNASEAL DUO
REYNASEAL DUO
REYNASEAL DUO
REYNASEAL DUO

REYNAPROTECTOR
REYNAPROTECTOR
REYNAPROTECTOR
REYNAPROTECTOR

DICHTINGSMIDDEL
MATIERE D'ETANCHEITE
SEALING AGENT
ABDICHTUNG

MONTAGEVOLGORDE
L 'ORDRE DE MONTAGE
THE ORDER OF ASSEMBLY
MONTAGEREIHENFOLGE
1 2 3 .

BIJKOMENDE INFO VOORBEREIDING/VERWERKING -> ZIE " HARDWARE CONFIGURATOR " !
INFO COMPLEMENTAIRE PREPARATION/USINAGE -> VOIR " HARDWARE CONFIGURATOR " !
ADDITIONAL INFO PREPARATION/PROCESSING -> SEE " HARDWARE CONFIGURATOR " !
ZUSAETZLICHE INFO VORBEREITUNG/VERARBEITUNG -> SIEHE " HARDWARE CONFIGURATOR " !

T SCREW JIG

T-BRACKET WITH SCREW | 095.AKF6.00

MASTERLINE 8-Fu

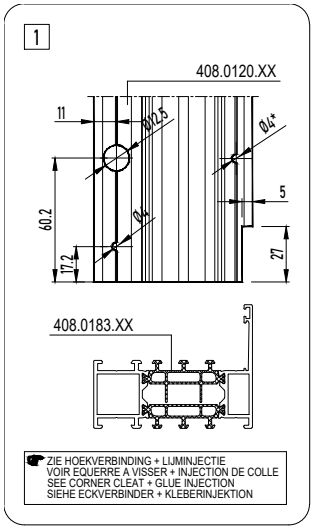

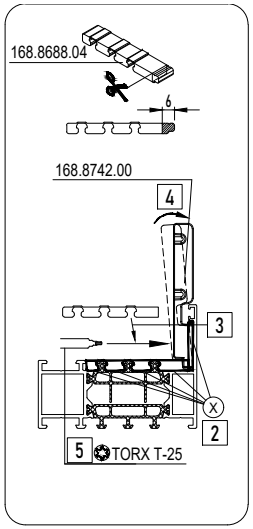

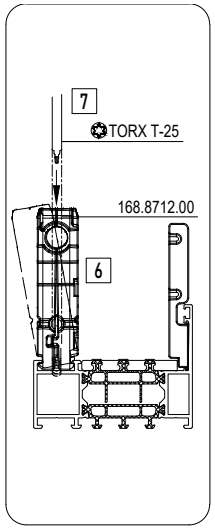

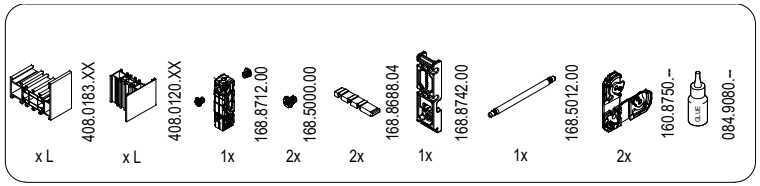

*
OPTIE / OPTION

niet vereist voor alle profielen

pas nécessaire pour tout les profils

not required for all profiles

nicht für alle Profile erforderlich

CHAPTER C

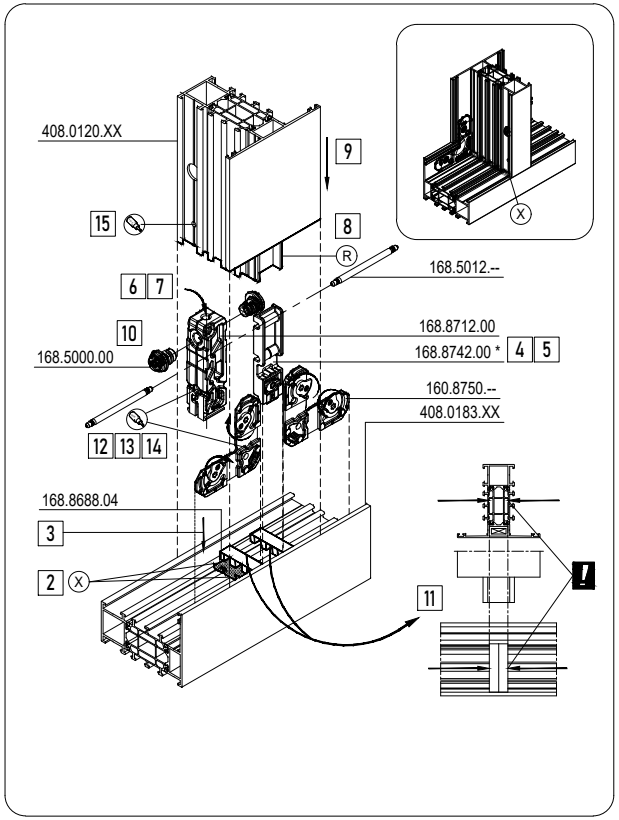

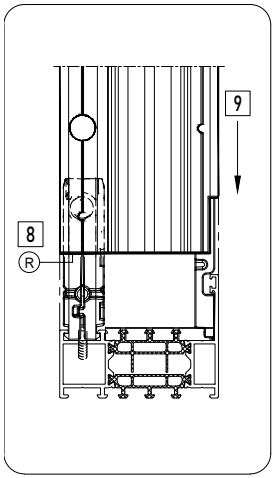

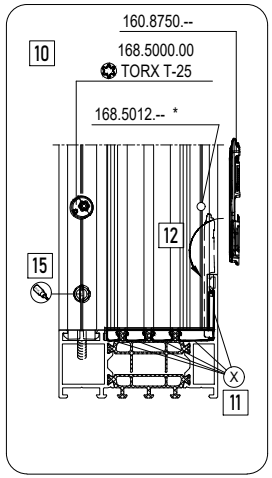

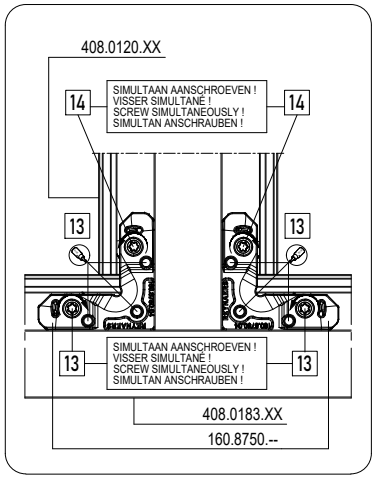

800kg	Max. draaggewicht per set 800kg Poids de portée maximale par set 800kg Maximal bearing weight per set 800kg Maximales Traggewicht pro Satz 800kg
250kg	Max. draaggewicht per set 250kg Poids de portée maximale par set 250kg Maximal bearing weight per set 250kg Maximales Traggewicht pro Satz 250kg

168.8712.00 NOT GLUED:	
350kg	Max. draaggewicht per set 350kg Poids de portée maximale par set 350kg Maximal bearing weight per set 350kg Maximales Traggewicht pro Satz 350kg
200kg	Max. draaggewicht per set 200kg Poids de portée maximale par set 200kg Maximal bearing weight per set 200kg Maximales Traggewicht pro Satz 200kg

Plaats 168.8688.04 gelijk met beide uiteinden van T- verbinder
Placer 168.8688.04 en affleurement avec les deux extrémités du jonction-T
Place 168.8688.04 flush with both ends of the T-bracket
Platzieren 168.8688.04 bündig mit den beiden Enden des T-verbinder

BIJKOMENDE INFO VOORBEREIDING/VERWERKING -> RAADPLEEG HOOFDSTUK B !
INFO COMPLEMENTAIRE PREPARATION/USINAGE -> CONSULTEZ CHAPITRE B !
ADDITIONAL INFO PREPARATION/PROCESSING -> CONSULT CHAPTER B !
ZUSAETZLICHE INFO VORBEREITUNG/VERARBEITUNG -> SIEHE KAPITEL B !

R REYNAPROTECTOR
REYNAPROTECTOR
REYNAPROTECTOR
REYNAPROTECTOR

X DICHTINGSMIDDEL
MATIERE D'ETANCHEITE
SEALING AGENT
ABDICHTUNG

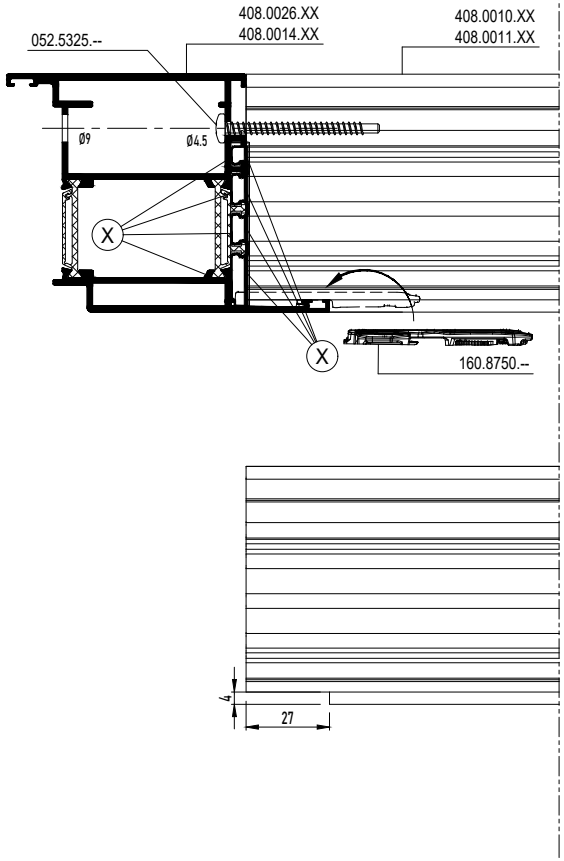

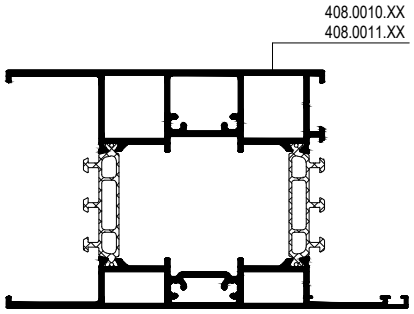

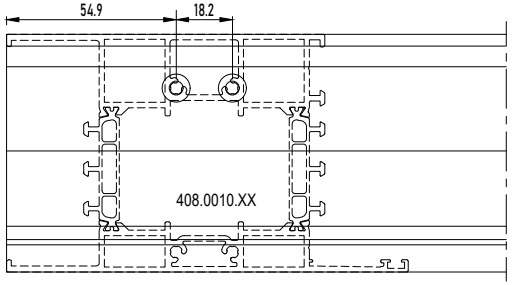

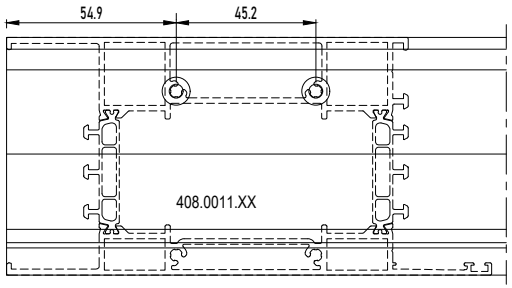

Plaats 168.8688.04 gelijk met beide uiteinden van T- verbinder
Placer 168.8688.04 en affleurement avec les deux extrémités du jonction-T
Place 168.8688.04 flush with both ends of the T-bracket
Platzieren 168.8688.04 bündig mit den beiden Enden des T-verbinder

BIJKOMENDE INFO VOORBEREIDING/VERWERKING -> RAADPLEEG HOOFDSTUK B !
INFO COMPLEMENTAIRE PREPARATION/USINAGE -> CONSULTEZ CHAPITRE B !
ADDITIONAL INFO PREPARATION/PROCESSING -> CONSULT CHAPTER B !
ZUSAETZLICHE INFO VORBEREITUNG/VERARBEITUNG -> SIEHE KAPITEL B !

(R) REYNAPROTECTOR
REYNAPROTECTOR
REYNAPROTECTOR
REYNAPROTECTOR

(X) DICHTINGSMIDDEL
MATIERE D'ETANCHEITE
SEALING AGENT
ABDICHTUNG

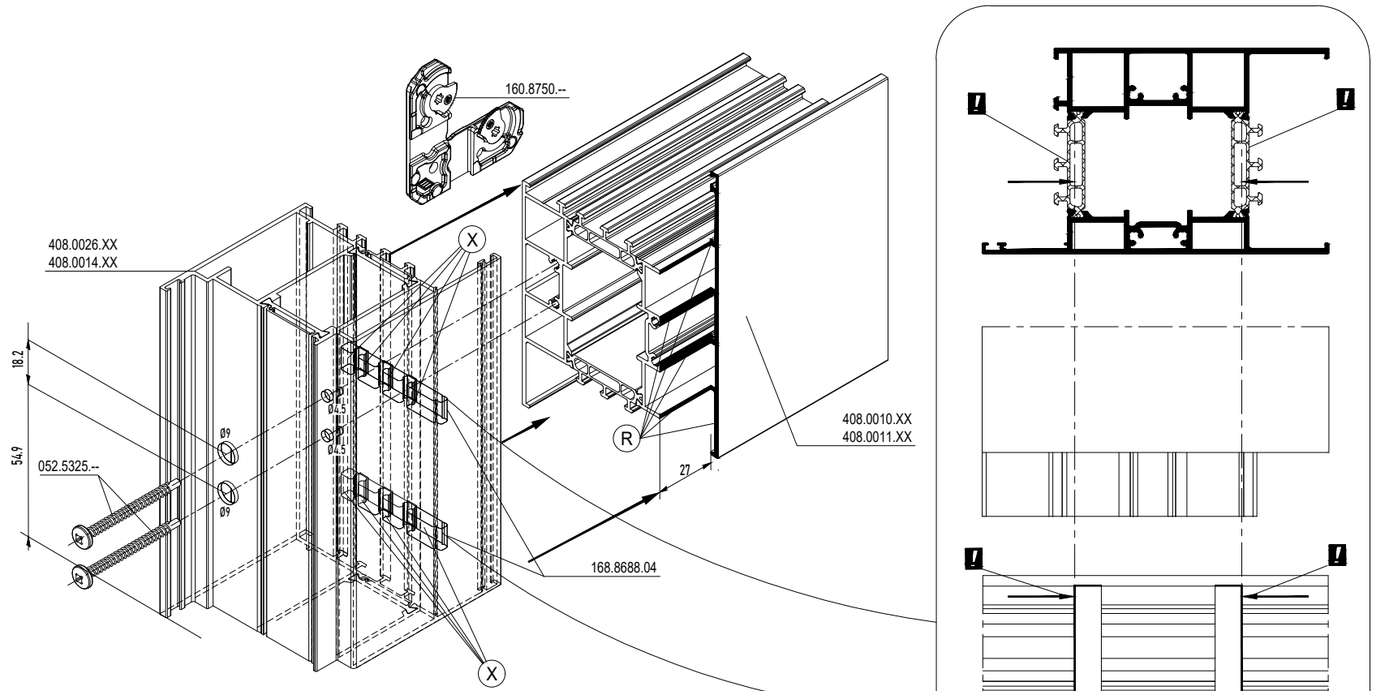

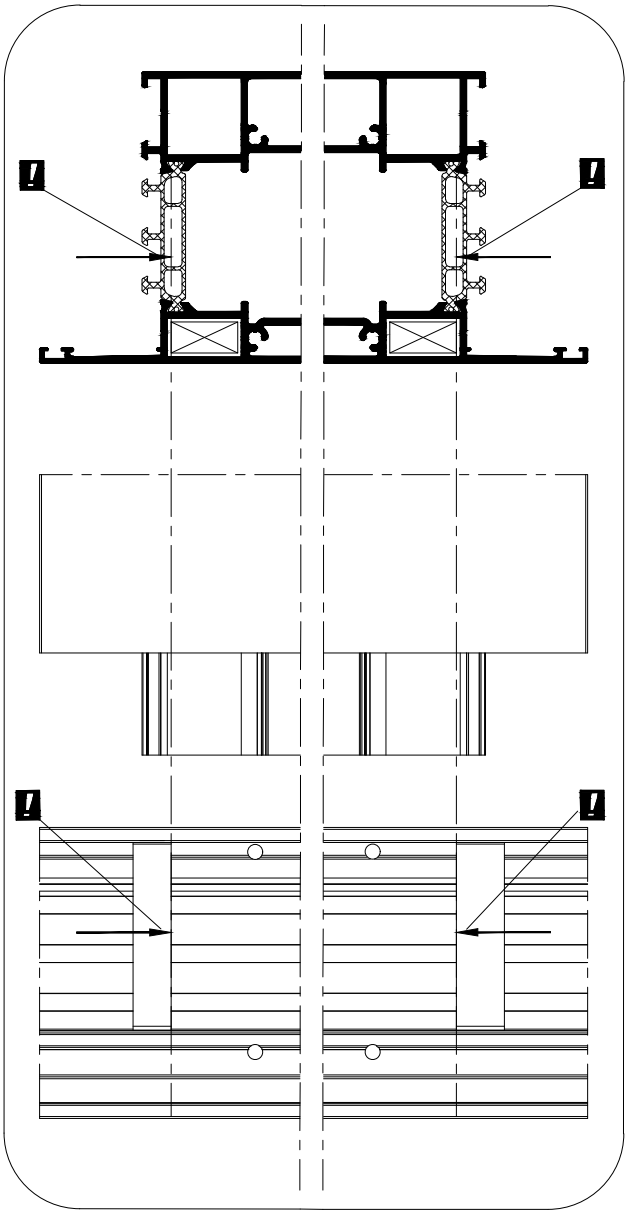

Plaats 168.8688.04 gelijk met beide uiteinden van T- verbinder
Placer 168.8688.04 en affleurement avec les deux extrémités du jonction-T
Place 168.8688.04 flush with both ends of the T-bracket
Platzieren 168.8688.04 bündig mit den beiden Enden des T-verbinder

T BYSCREW MC

T-CONNECTION WITH SCREW

MASTERLINE 8-Fu

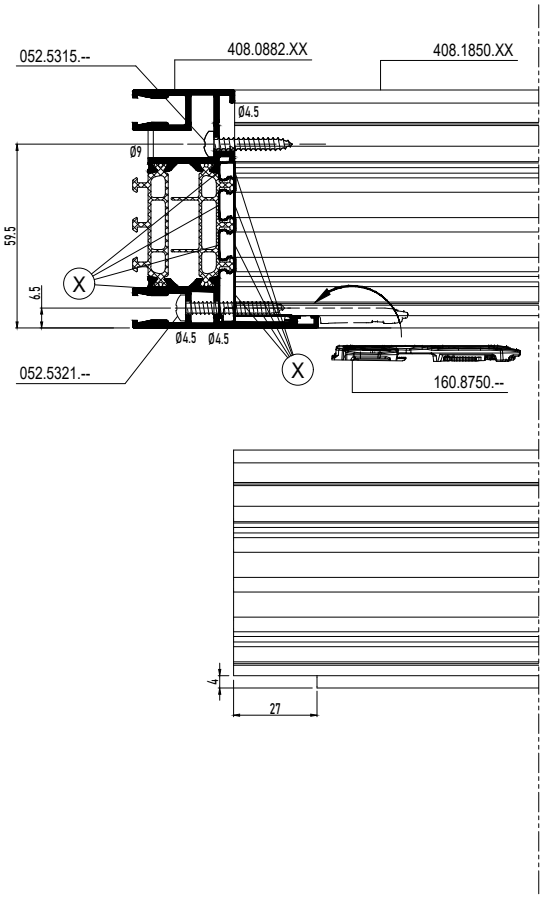

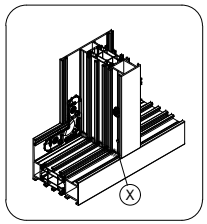

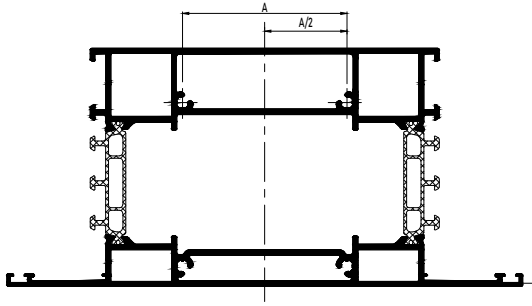

	A
408.1116.XX	33.2
408.1850.XX	53.2
408.1851.XX	73.2
408.1852.XX	93.2
408.1853.XX	93.2
408.1854.XX	113.2
408.1855.XX	133.2
408.1856.XX	153.2

(R) REYNAPROTECTOR
REYNAPROTECTOR
REYNAPROTECTOR
REYNAPROTECTOR

(X) DICHTINGSMIDDEL
MATIERE D'ETANCHEITE
SEALING AGENT
ABDICHTUNG

BIJKOMENDE INFO VOORBEREIDING/VERWERKING -> ZIE 'VERWERKINGSVOORSCHRIFTEN' !
INFO COMPLEMENTAIRE PREPARATION/USINAGE -> VOIR CHAPITRE F 'PRESCRIPTIONS DE MISE EN OEUVRE' !
ADDITIONAL INFO PREPARATION/PROCESSING -> SEE CHAPTER F 'PROCESSING DATA' !
ZUSAETZLICHE INFO VORBEREITUNG/VERARBEITUNG -> SIEHE KAPITEL F 'VERARBEITUNGSVORSCHRIFTEN' !

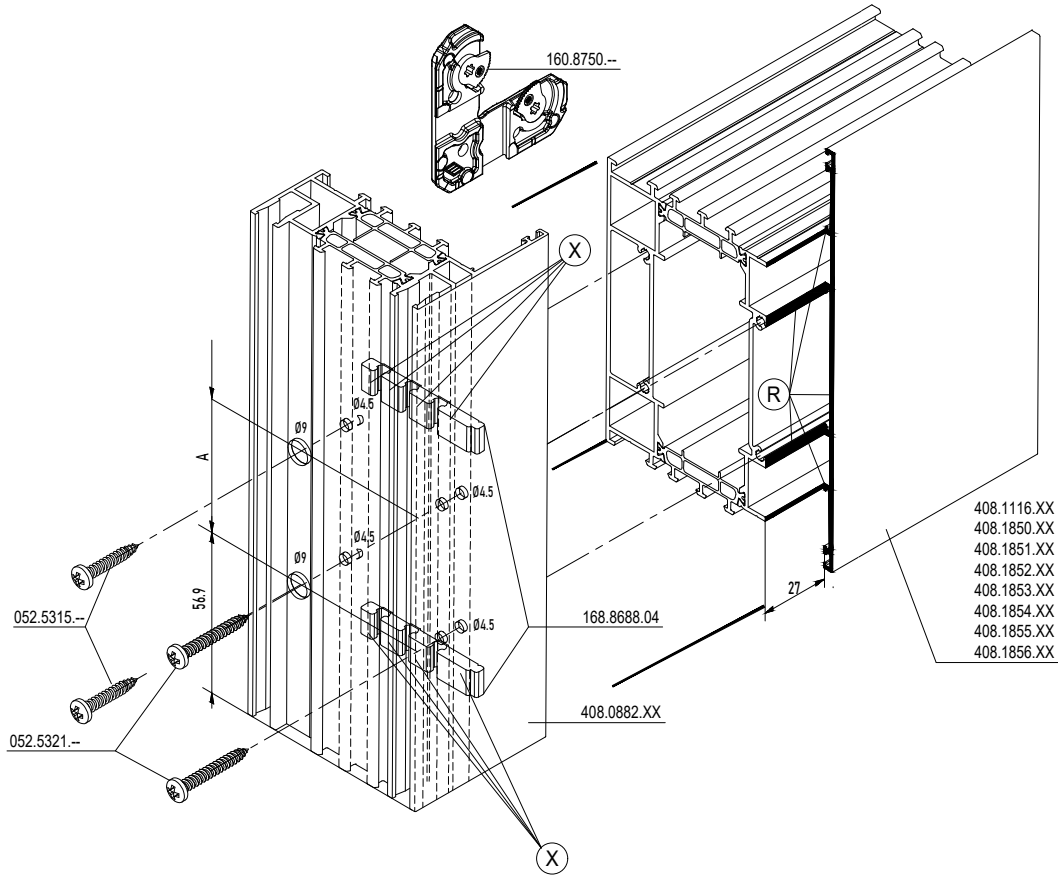
160.8750.--
X
R
A
Ø9
Ø4.5
Ø4.5
Ø9
Ø4.5
Ø4.5
56.9
052.5315.--
052.5321.--
168.8688.04
408.0882.XX
27
408.1116.XX
408.1850.XX
408.1851.XX
408.1852.XX
408.1853.XX
408.1854.XX
408.1855.XX
408.1856.XX
X

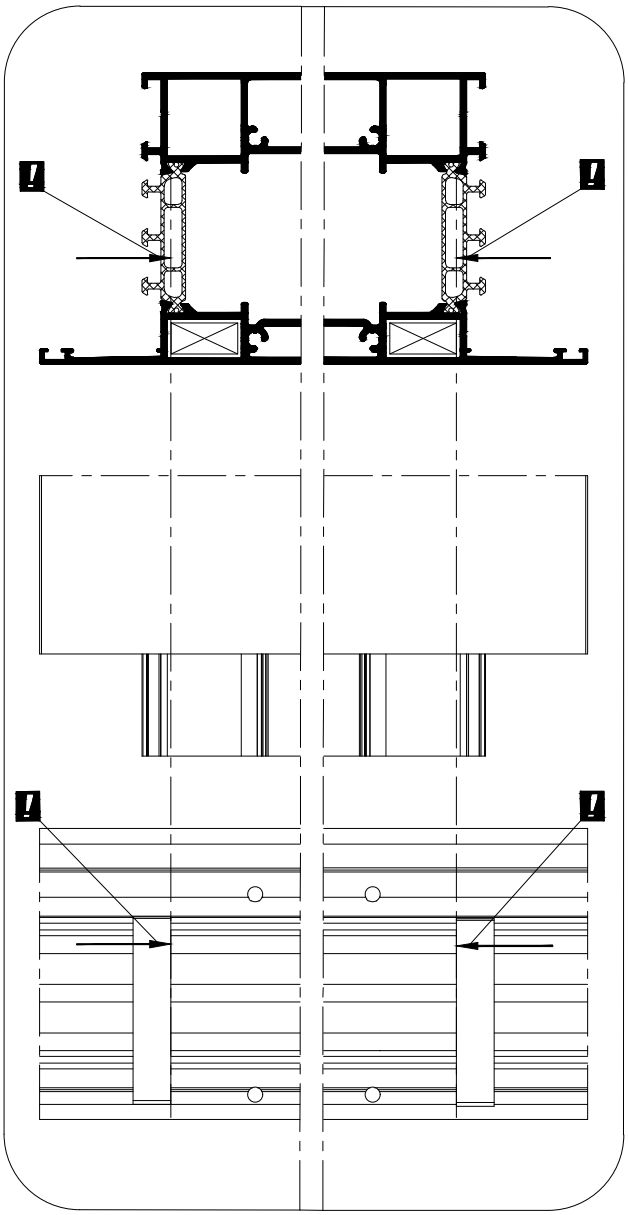

Plaats 168.8688.04 gelijk met beide uiteinden van T- verbinder
Placer 168.8688.04 en affleurement avec les deux extrémités du jonction-T
Place 168.8688.04 flush with both ends of the T-bracket
Platzieren 168.8688.04 bündig mit den beiden Enden des T-verbinder

T BYSCREW MC

T-CONNECTION WITH SCREW

MASTERLINE 8-Fu

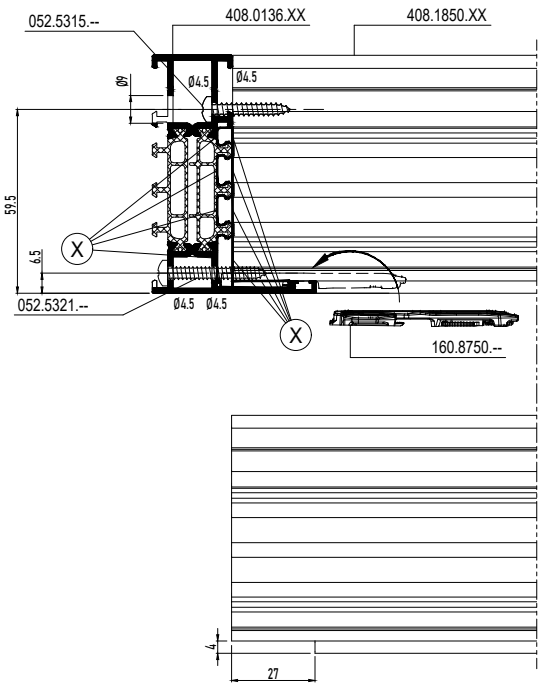

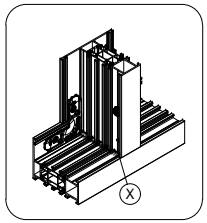

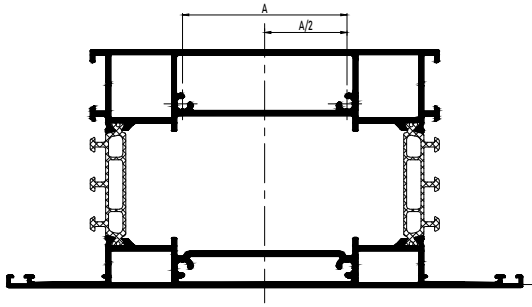

	A
408.1116.XX	33.2
408.1850.XX	53.2
408.1851.XX	73.2
408.1852.XX	93.2
408.1853.XX	93.2
408.1854.XX	113.2
408.1855.XX	133.2
408.1856.XX	153.2

(R)	REYNAPROTECTOR REYNAPROTECTOR REYNAPROTECTOR REYNAPROTECTOR
(X)	DICHTINGSMIDDEL MATIERE D'ETANCHEITE SEALING AGENT ABDICHTUNG

BIJKOMENDE INFO VOORBEREIDING/VERWERKING -> ZIE " HARDWARE CONFIGURATOR " !
INFO COMPLEMENTAIRE PREPARATION/USINAGE -> VOIR " HARDWARE CONFIGURATOR " !
ADDITIONAL INFO PREPARATION/PROCESSING -> SEE " HARDWARE CONFIGURATOR " !
ZUSAETZLICHE INFO VORBEREITUNG/VERARBEITUNG -> SIEHE " HARDWARE CONFIGURATOR " !

T BYSCREW MC

T-CONNECTION WITH SCREW

MASTERLINE 8-Fu

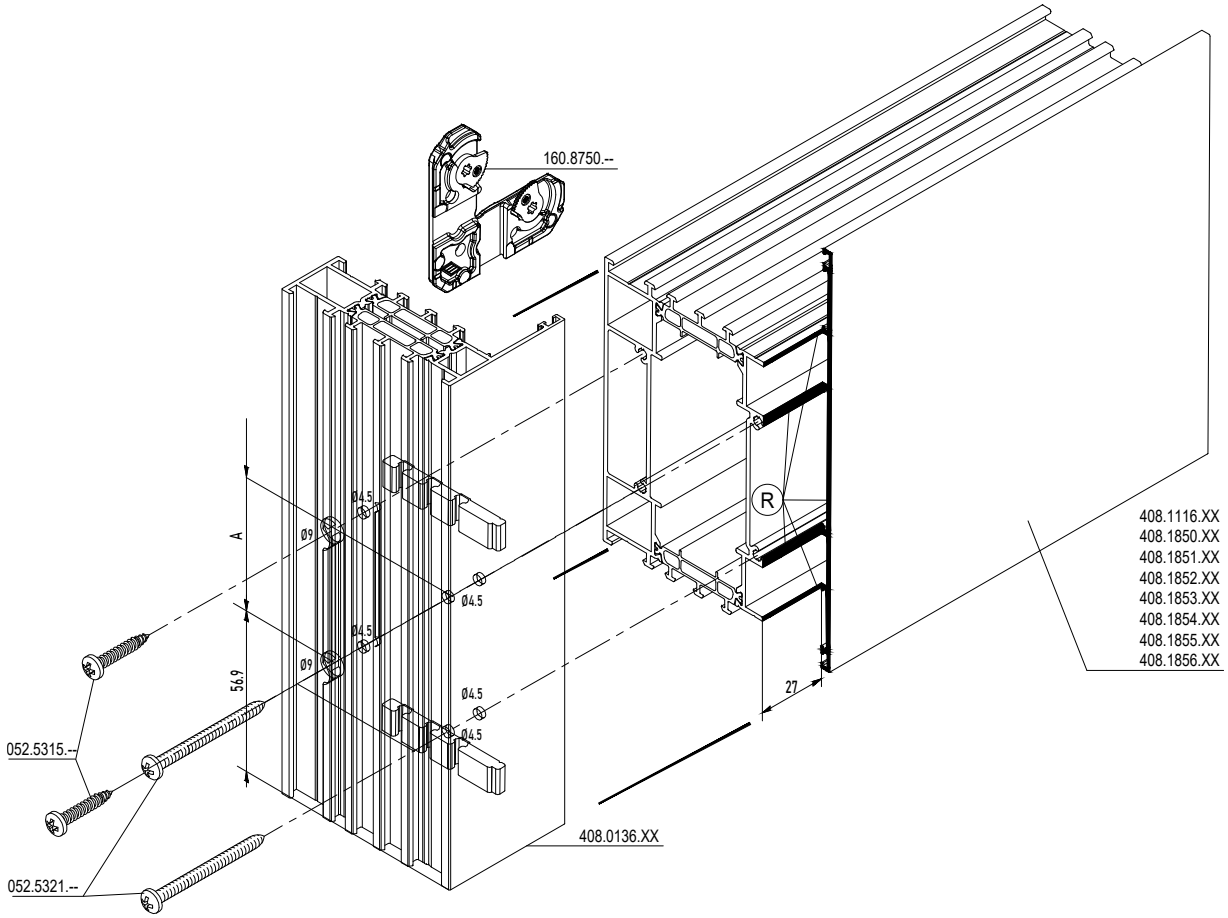

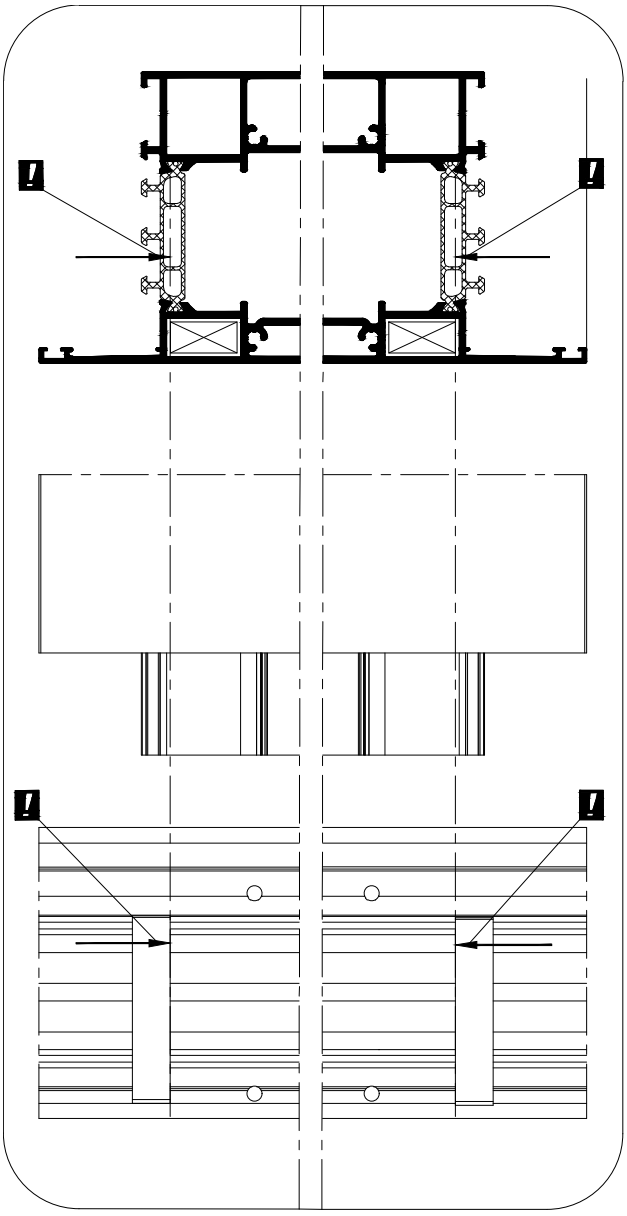

Plaats 168.8688.04 gelijk met beide uiteinden van T- verbinder
Placer 168.8688.04 en affleurement avec les deux extrémités du jonction-T
Place 168.8688.04 flush with both ends of the T-bracket
Platzieren 168.8688.04 bündig mit den beiden Enden des T-verbinder

T BYSCREW MFPT

T-CONNECTION WITH SCREW | 095.AKF6.00

MASTERLINE 8-Fu

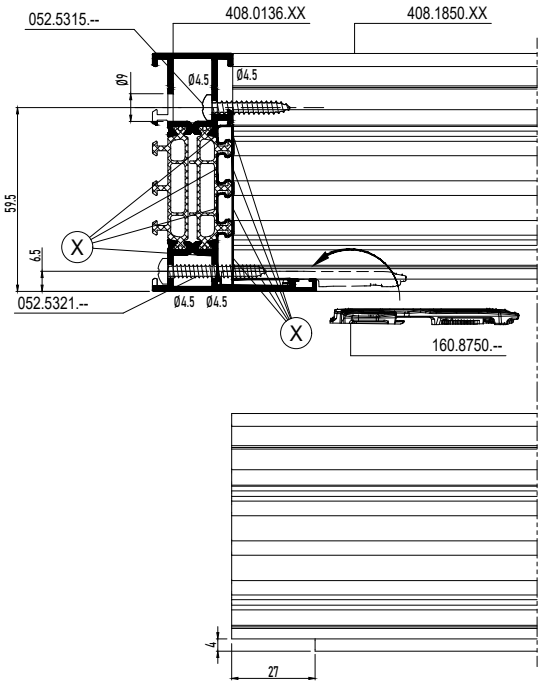

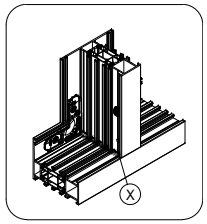

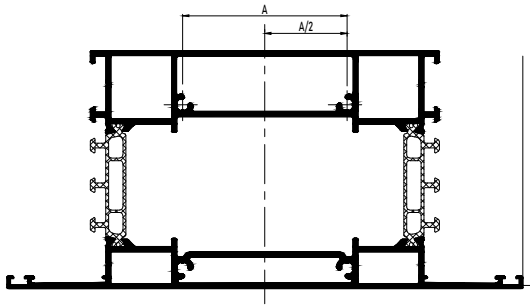

	A
408.1116.XX	33.2
408.1850.XX	53.2
408.1851.XX	73.2
408.1852.XX	93.2
408.1853.XX	93.2
408.1854.XX	113.2
408.1855.XX	133.2
408.1856.XX	153.2

R **REYNAPROTECTOR**
REYNAPROTECTOR
REYNAPROTECTOR
REYNAPROTECTOR

X DICHTINGSMIDDEL
MATIERE D'ETANCHEITE
SEALING AGENT
ABDICHTUNG

AANVULLENDE INFO VOORBEREIDING/VERWERKING -> ZIE " HARDWARE CONFIGURATOR " !
INFO COMPLEMENTAIRE PREPARATION/USINAGE -> VOIR " HARDWARE CONFIGURATOR " !
ADDITIONAL INFO PREPARATION/PROCESSING -> SEE " HARDWARE CONFIGURATOR " !
ZUSAETZLICHE INFO VORBEREITUNG/VERARBEITUNG -> SIEHE " HARDWARE CONFIGURATOR " !

T BYSCREW MFPT

T-CONNECTION WITH SCREW | 095.AKF6.00

MASTERLINE 8-Fu

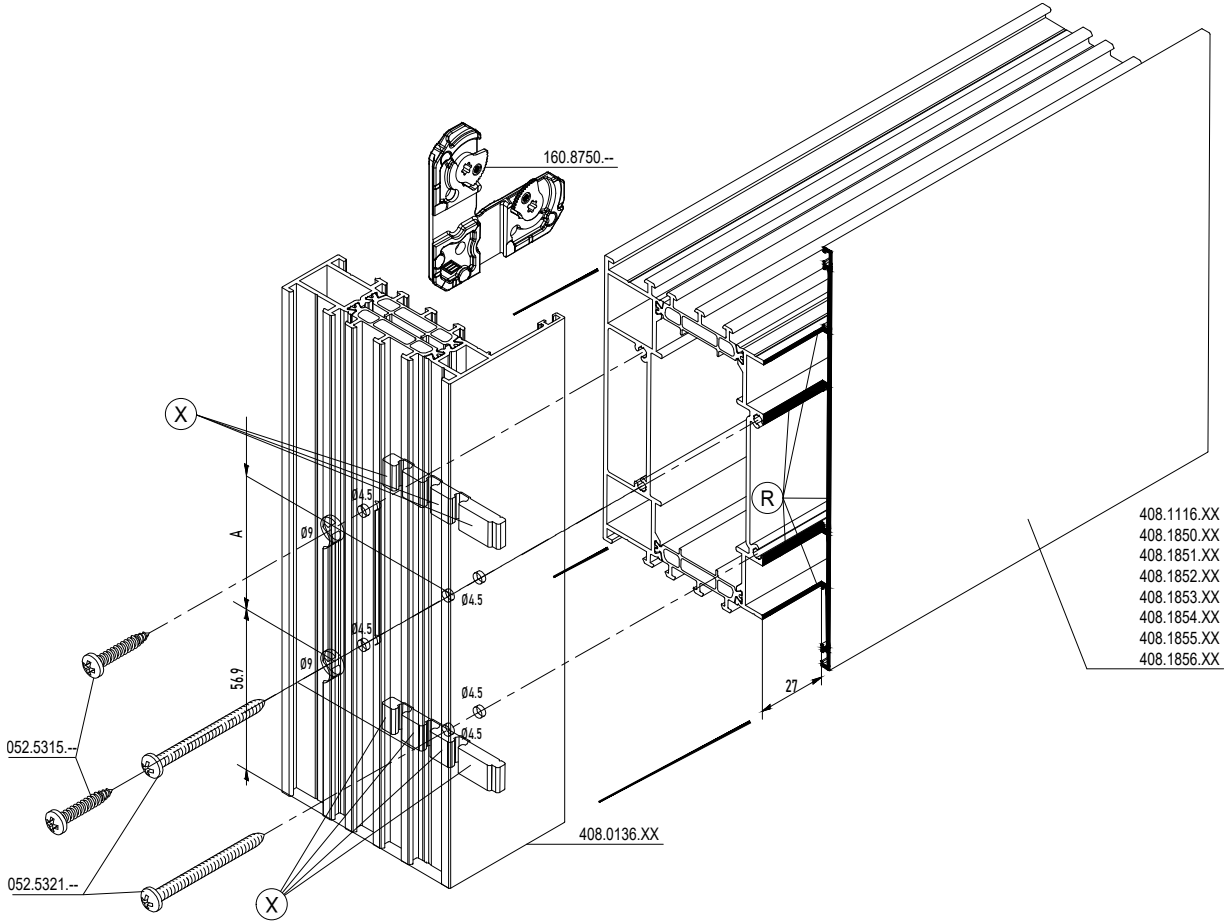

T BYSCREW MFPT

T-CONNECTION WITH SCREW | 095.AKF6.00

MASTERLINE 8-Fu

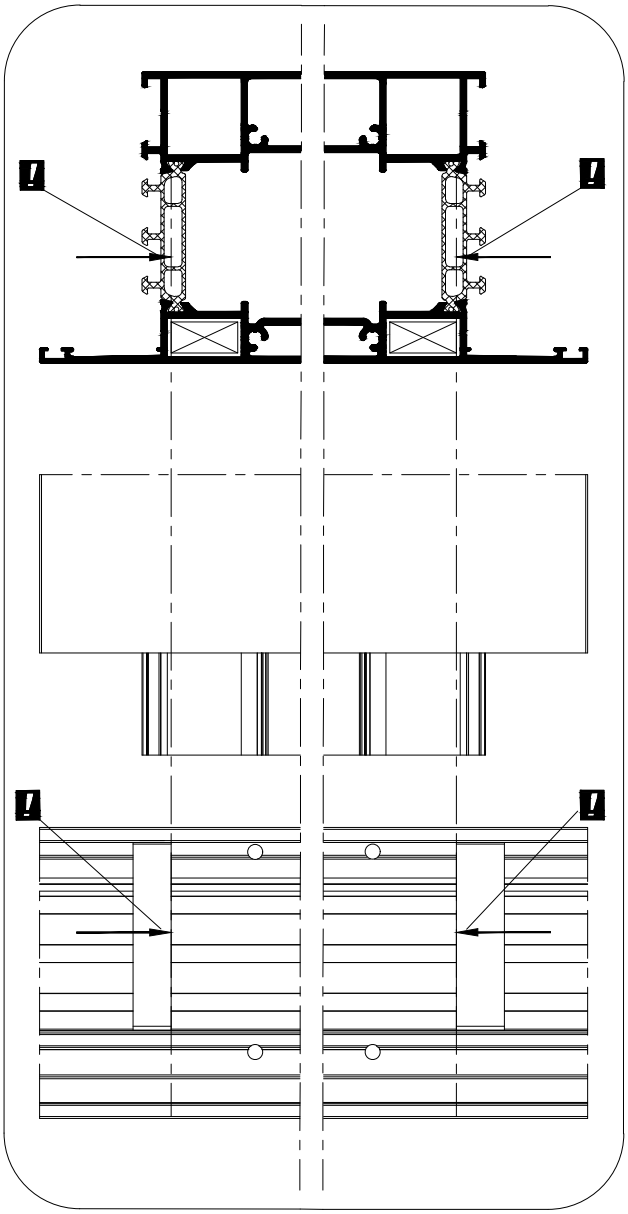

Plaats 168.8688.04 gelijk met beide uiteinden van T- verbinder
Placer 168.8688.04 en affleurement avec les deux extrémités du jonction-T
Place 168.8688.04 flush with both ends of the T-bracket
Platzieren 168.8688.04 bündig mit den beiden Enden des T-verbinder

T BYSCREW MFPT

T-CONNECTION WITH SCREW | 095.AKF6.00

MASTERLINE 8-Fu

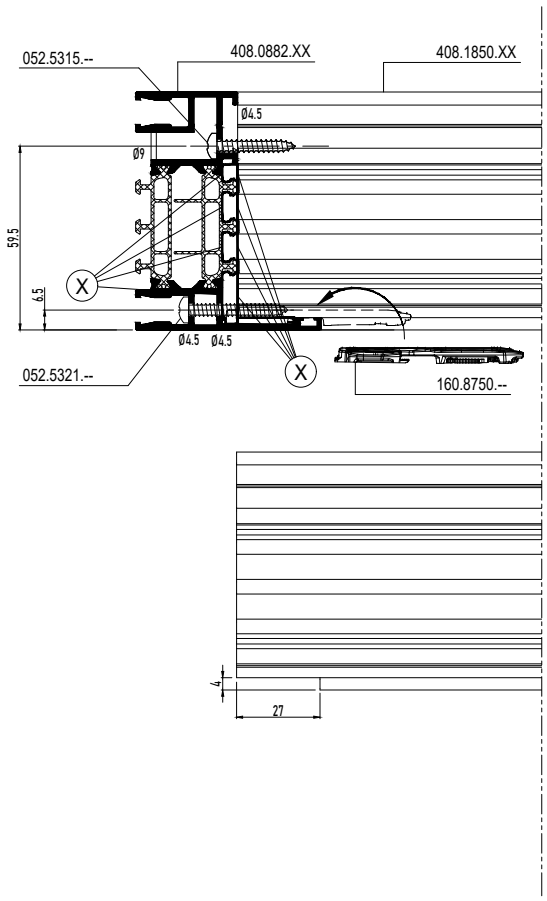

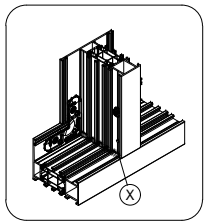

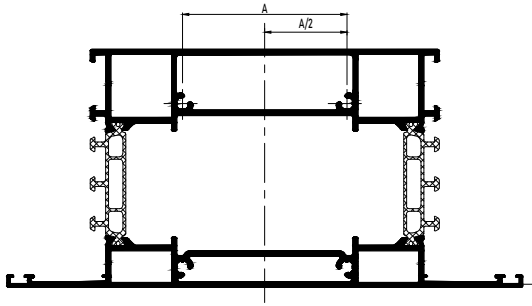

	A
408.1116.XX	33.2
408.1850.XX	53.2
408.1851.XX	73.2
408.1852.XX	93.2
408.1853.XX	93.2
408.1854.XX	113.2
408.1855.XX	133.2
408.1856.XX	153.2

(R) REYNAPROTECTOR
REYNAPROTECTOR
REYNAPROTECTOR
REYNAPROTECTOR

(X) DICHTINGSMIDDEL
MATIERE D'ETANCHEITE
SEALING AGENT
ABDICHTUNG

BIJKOMENDE INFO VOORBEREIDING/VERWERKING -> ZIE 'VERWERKINGSVOORSCHRIFTEN' !
INFO COMPLEMENTAIRE PREPARATION/USINAGE -> VOIR CHAPITRE F 'PRESCRIPTIONS DE MISE EN OEUVRE' !
ADDITIONAL INFO PREPARATION/PROCESSING -> SEE CHAPTER F 'PROCESSING DATA' !
ZUSAETZLICHE INFO VORBEREITUNG/VERARBEITUNG -> SIEHE KAPITEL F 'VERARBEITUNGSVORSCHRIFTEN' !

T BYSCREW MFPT

T-CONNECTION WITH SCREW | 095.AKF6.00

MASTERLINE 8-Fu

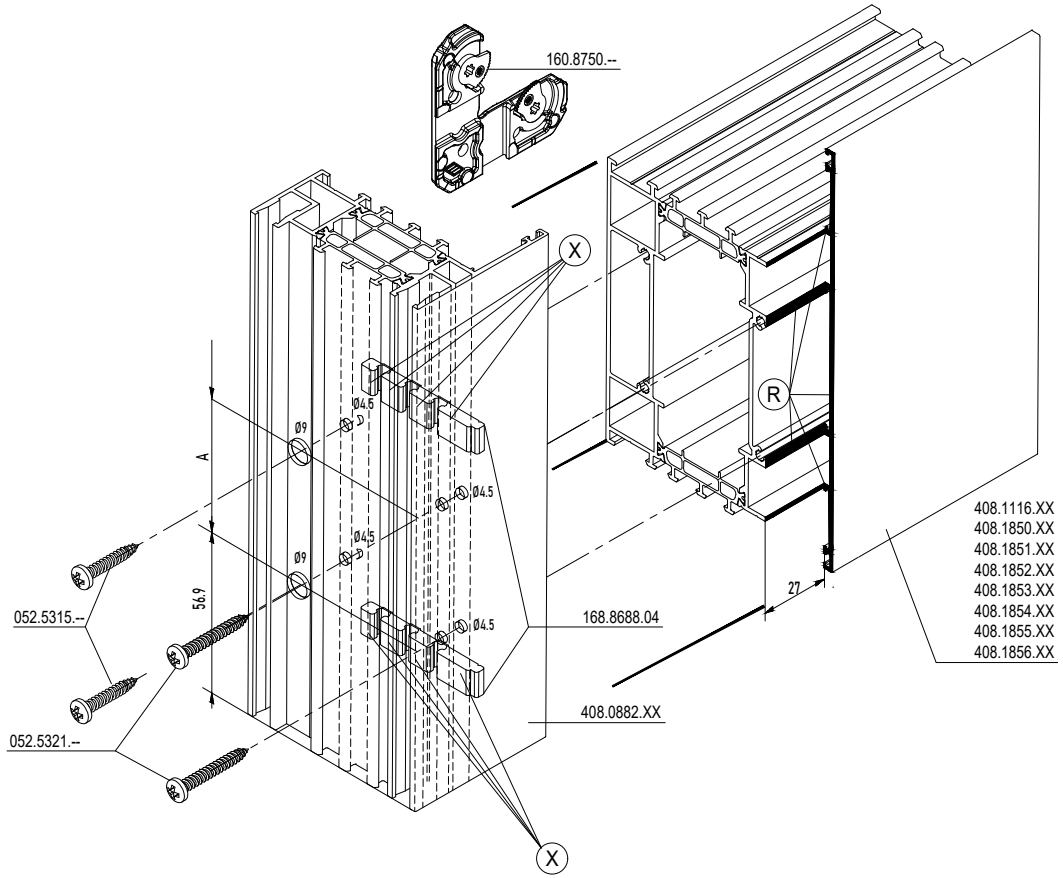

Plaats 168.8688.04 gelijk met beide uiteinden van T- verbinder
Placer 168.8688.04 en affleurement avec les deux extrémités du jonction-T
Place 168.8688.04 flush with both ends of the T-bracket
Platzieren 168.8688.04 bündig mit den beiden Enden des T-verbinder

(R) **REYNAPROTECTOR**
REYNAPROTECTOR
REYNAPROTECTOR
REYNAPROTECTOR

(X) DICHTINGSMIDDEL
MATIERE D'ETANCHEITE
SEALING AGENT
ABDICHTUNG

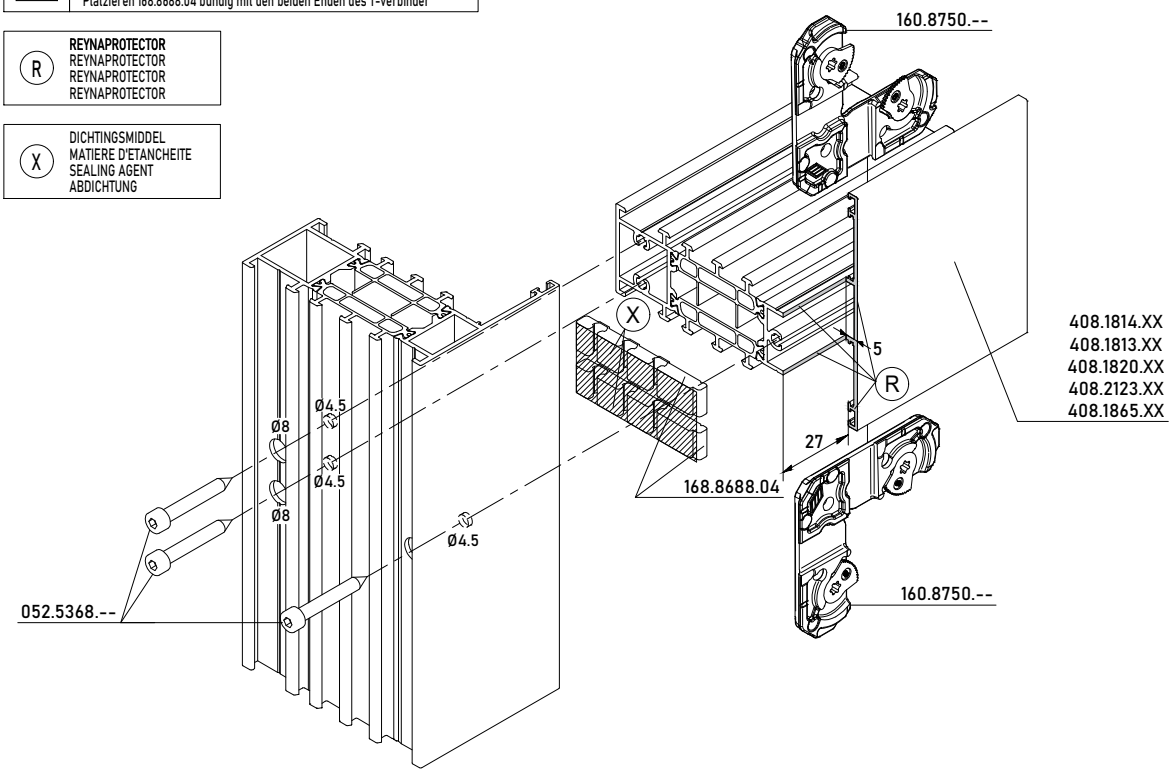

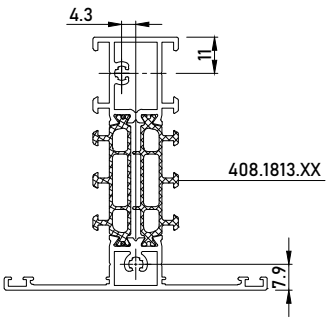

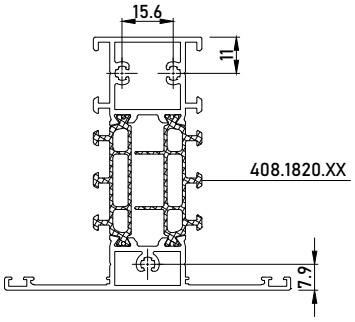

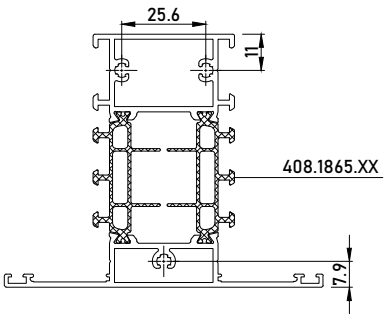

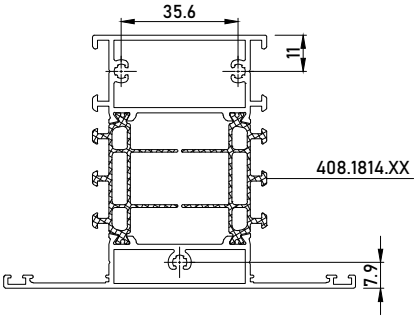

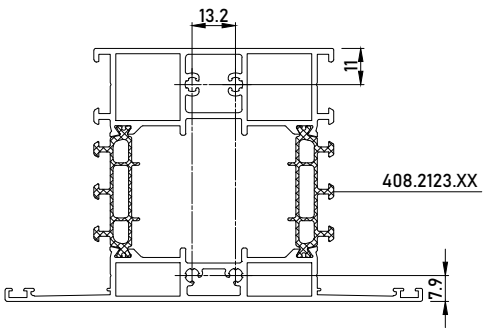

T BYSCREW JIG

BOTTOM DOOR RAILS

MASTERLINE 8-Fu

Plaats 168.8688.04 gelijk met beide uiteinden van T- verbinder
Placer 168.8688.04 en affleurement avec les deux extrémités du jonction-T
Place 168.8688.04 flush with both ends of the T-bracket
Platzieren 168.8688.04 bündig mit den beiden Enden des T-verbinder

BIJKOMENDE INFO VOORBEREIDING/VERWERKING -> RAADPLEEG HOOFDSTUK B !
INFO COMPLEMENTAIRE PREPARATION/USINAGE -> CONSULTEZ CHAPITRE B !
ADDITIONAL INFO PREPARATION/PROCESSING -> CONSULT CHAPTER B !
ZUSAETZLICHE INFO VORBEREITUNG/VERARBEITUNG -> SIEHE KAPITEL B !

R REYNAPROTECTOR
REYNAPROTECTOR
REYNAPROTECTOR
REYNAPROTECTOR

X DICHTINGSMIDDEL
MATIERE D'ETANCHEITE
SEALING AGENT
ABDICHTUNG

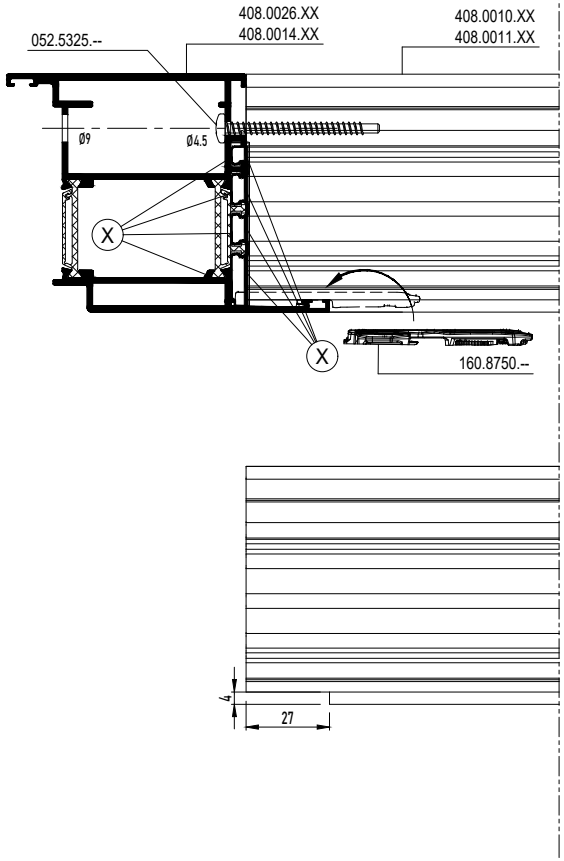

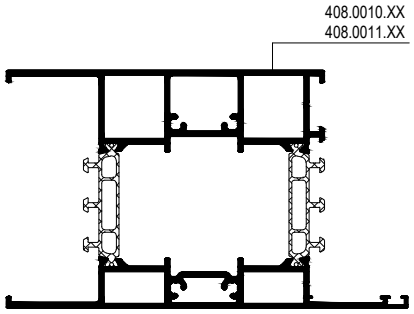

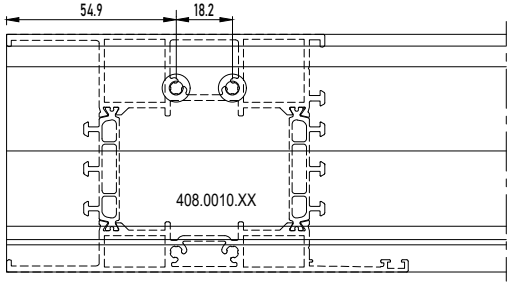

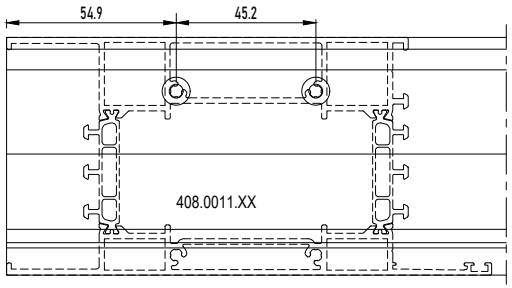

T BYSCREW JIG

BOTTOM DOOR RAILS

MASTERLINE 8-Fu

Plaats 168.8688.04 gelijk met beide uiteinden van T- verbinder
Placer 168.8688.04 en affleurement avec les deux extrémités du jonction-T
Place 168.8688.04 flush with both ends of the T-bracket
Platzieren 168.8688.04 bündig mit den beiden Enden des T-verbinder

BIJKOMENDE INFO VOORBEREIDING/VERWERKING -> RAADPLEEG HOOFDSTUK B !
INFO COMPLEMENTAIRE PREPARATION/USINAGE -> CONSULTEZ CHAPITRE B !
ADDITIONAL INFO PREPARATION/PROCESSING -> CONSULT CHAPTER B !
ZUSAETZLICHE INFO VORBEREITUNG/VERARBEITUNG -> SIEHE KAPITEL B !

(R) REYNAPROTECTOR
REYNAPROTECTOR
REYNAPROTECTOR
REYNAPROTECTOR

(X) DICHTINGSMIDDEL
MATIERE D'ETANCHEITE
SEALING AGENT
ABDICHTUNG

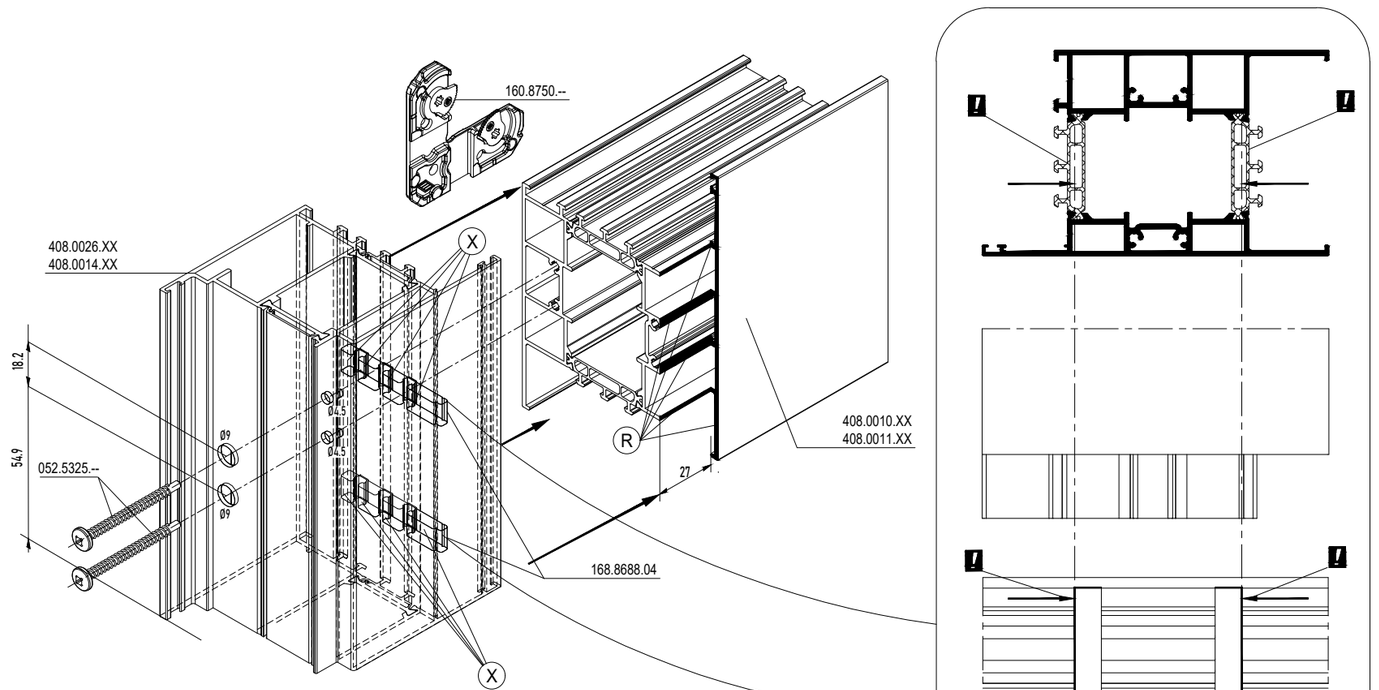

T VAR MC

T-CONNECTION ADJUSTABLE

MASTERLINE 8-Fu

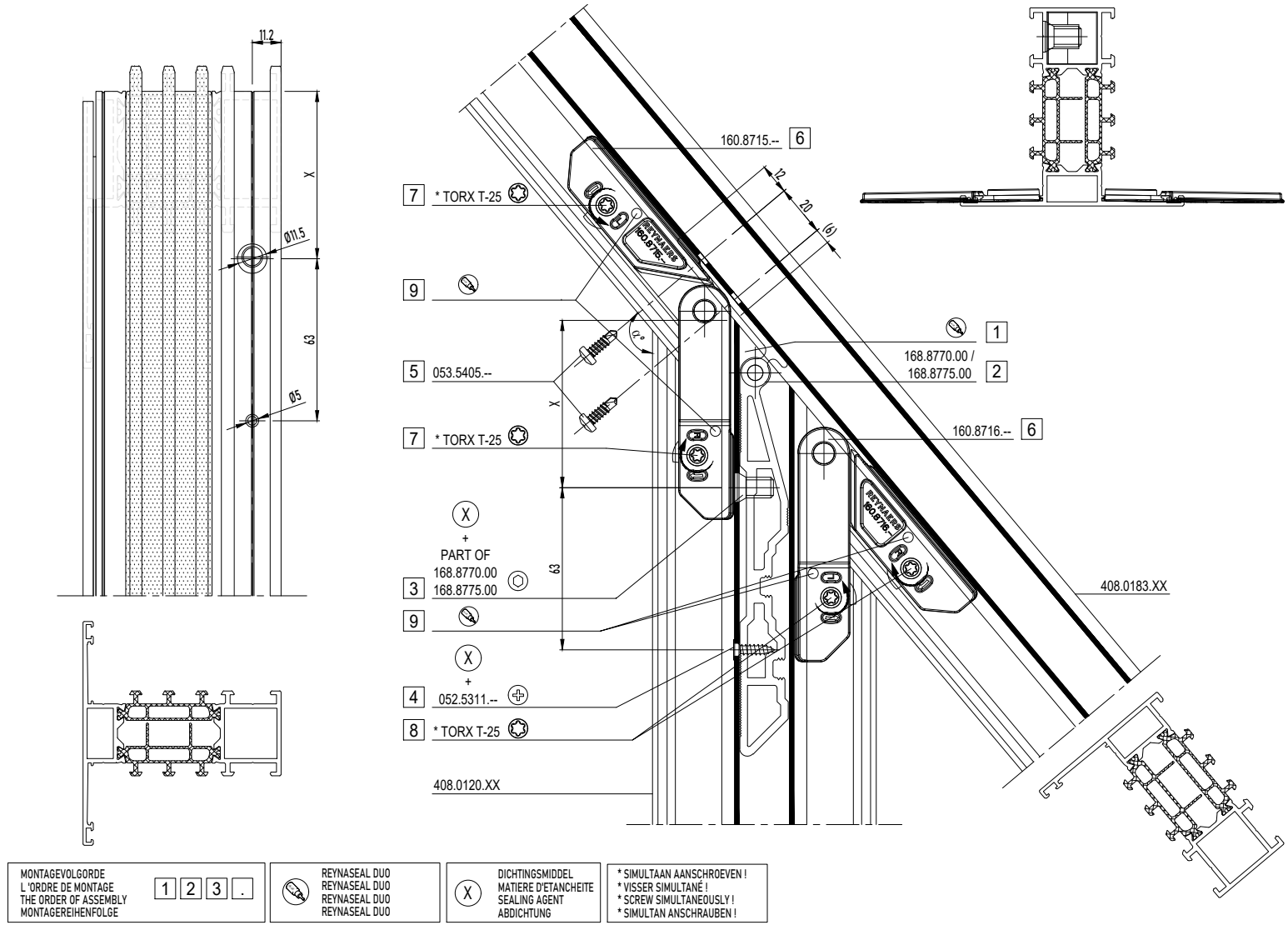

MONTAGEVOLGORDE L'ORDRE DE MONTAGE THE ORDER OF ASSEMBLY MONTAGEREIHENFOLGE	1 2 3 .	REYNASEAL DUO REYNASEAL DUO REYNASEAL DUO REYNASEAL DUO	DICHTINGSMIDDEL MATIERE D'ETANCHEITE SEALING AGENT ABDICHTUNG	* SIMULTAAN AANSCHROEVEN ! * VISSER SIMULTANÉ ! * SCREW SIMULTANEOUSLY ! * SIMULTAN ANSCHRAUBEN !

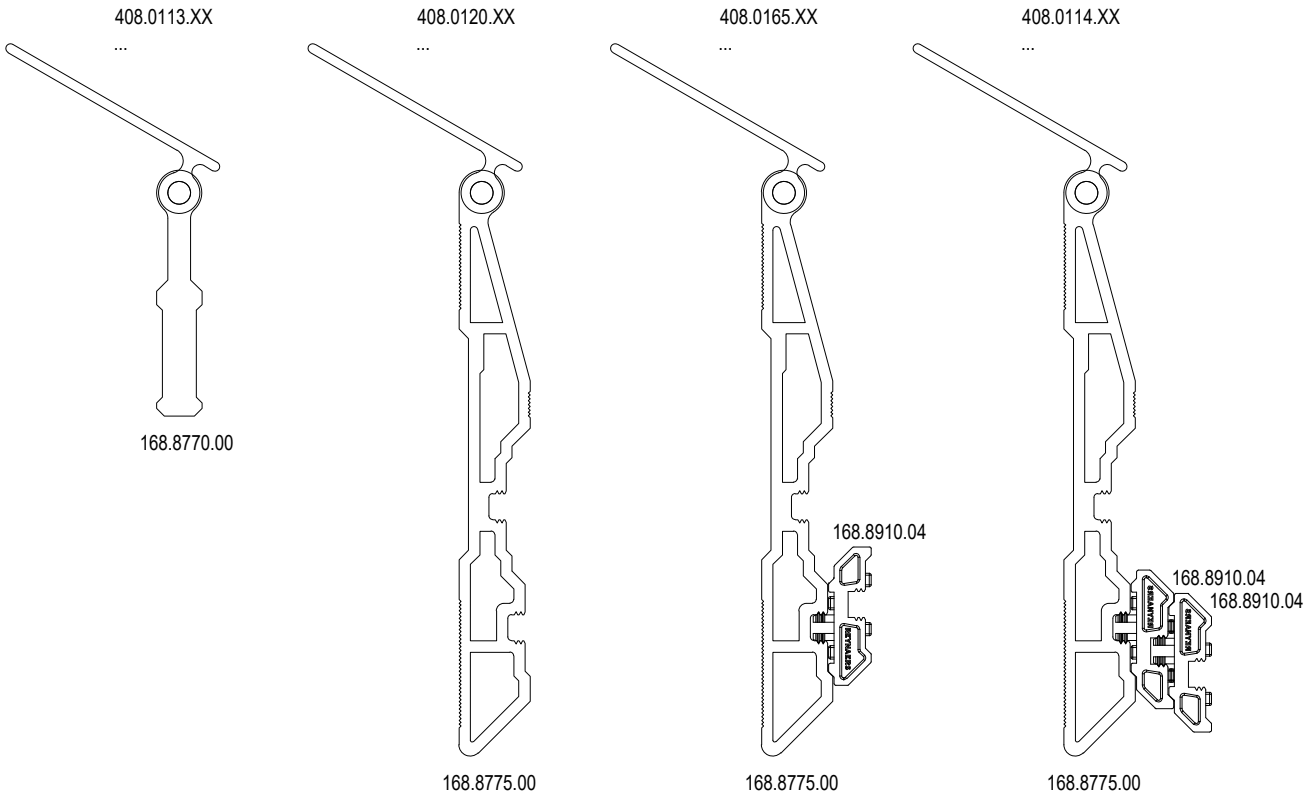

ARTIKELNUMMERS PER PROFIEL: RAADPLEEG HOOFDSTUK C
NUMÉROS DES ARTICLES PAR PROFIL: CONSULTEZ CHAPITRE C
ARTICLE NUMBERS BY PROFILE: CONSULT CHAPTER C
ARTIKEL REFERENZEN PRO PROFIL: SIEHE KAPITEL C

T VAR MC

T-CONNECTION ADJUSTABLE

MASTERLINE 8-Fu

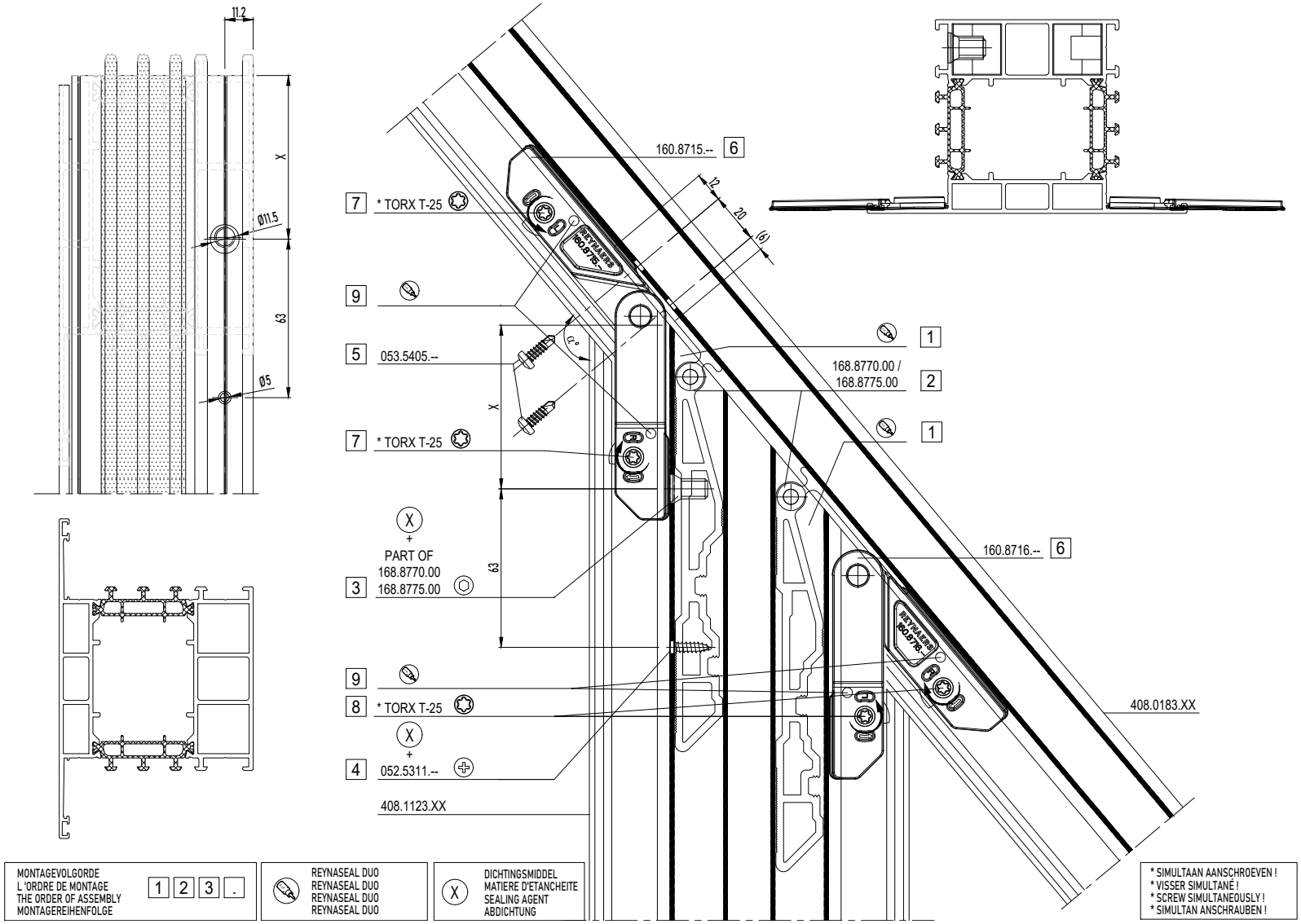

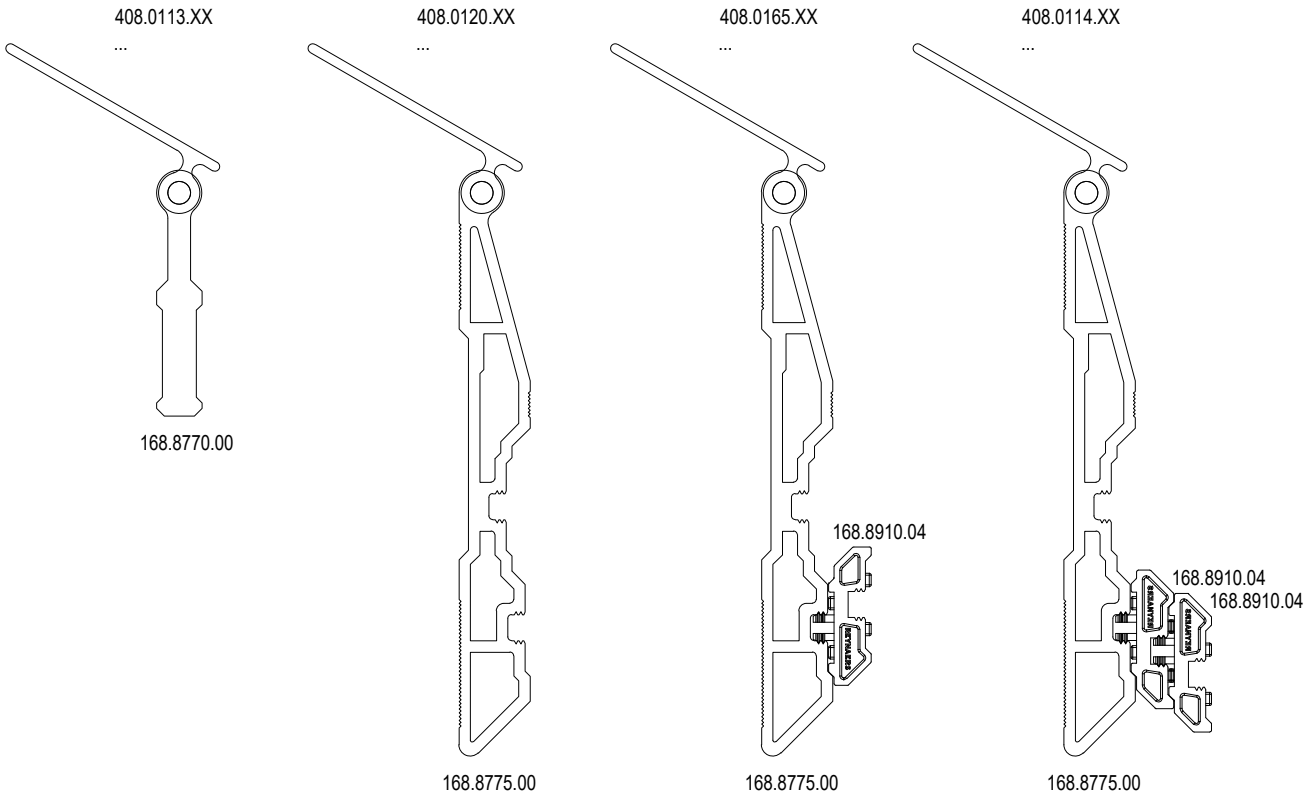

ARTIKELNUMMERS PER PROFIEL: RAADPLEEG HOOFDSTUK C
NUMÉROS DES ARTICLES PAR PROFIL: CONSULTEZ CHAPITRE C
ARTICLE NUMBERS BY PROFILE: CONSULT CHAPTER C
ARTIKEL REFERENZEN PRO PROFIL: SIEHE KAPITEL C

T VAR MC

T-CONNECTION ADJUSTABLE

MASTERLINE 8-Fu

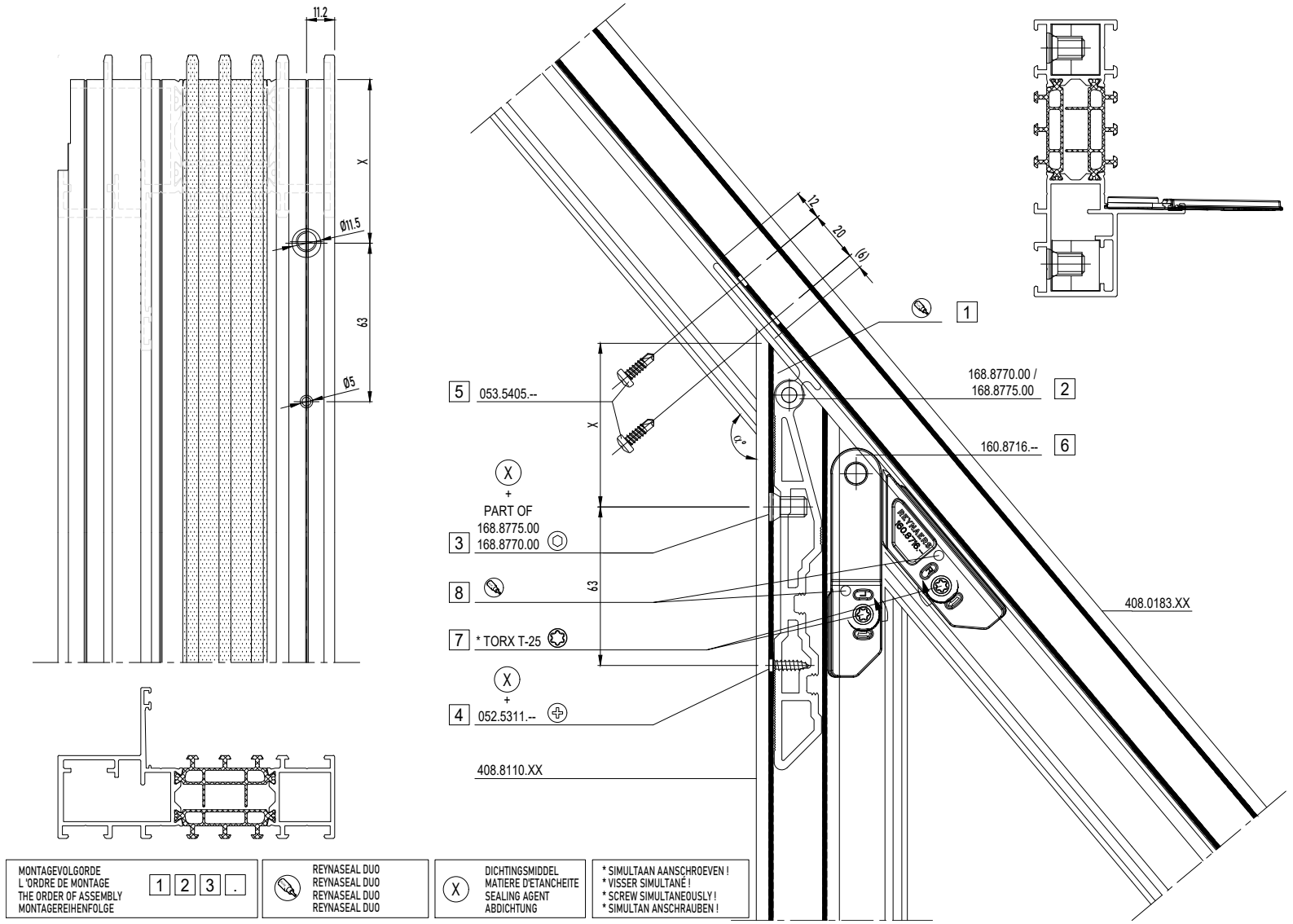

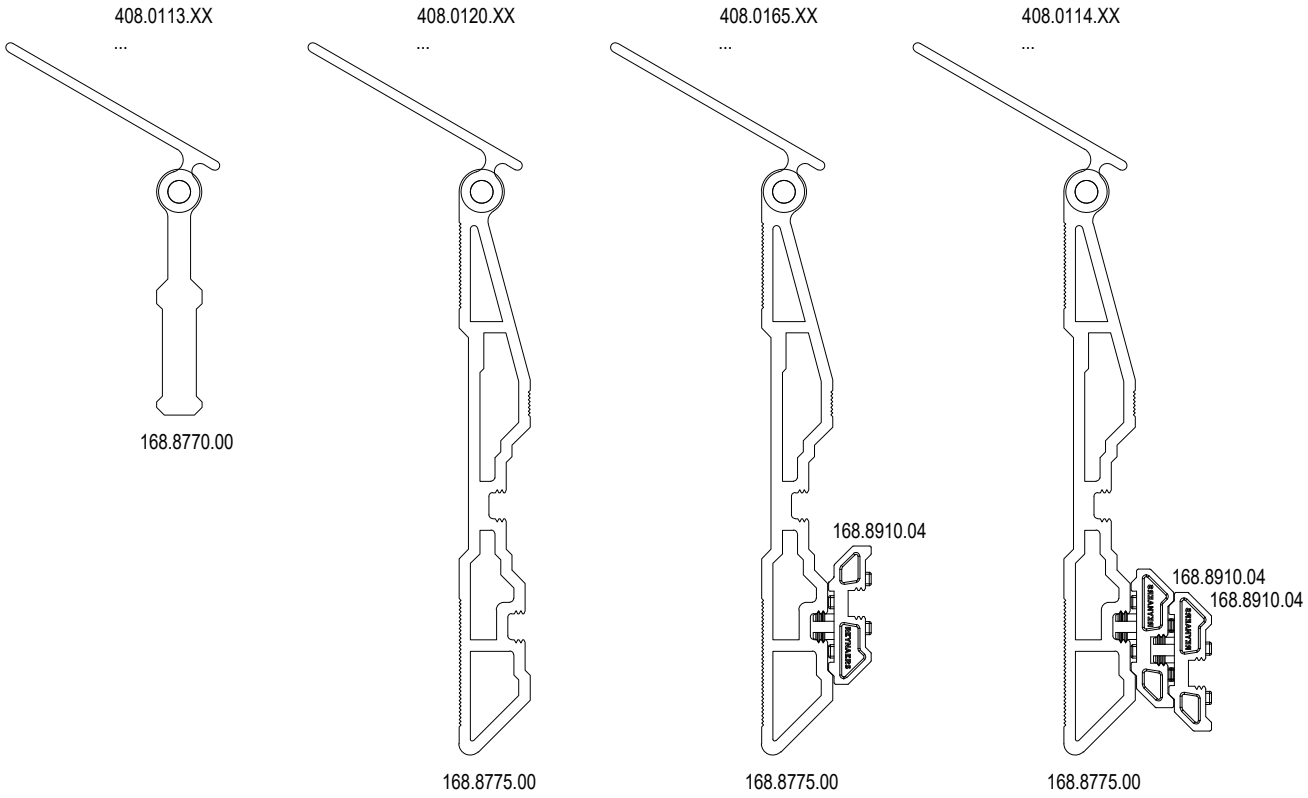

ARTIKELNUMMERS PER PROFIEL: RAADPLEEG HOOFDSTUK C
NUMÉROS DES ARTICLES PAR PROFIL: CONSULTEZ CHAPITRE C
ARTICLE NUMBERS BY PROFILE: CONSULT CHAPTER C
ARTIKEL REFERENZEN PRO PROFIL: SIEHE KAPITEL C

T VAR JIG

T-CONNECTION ADJUSTABLE

MASTERLINE 8-Fu

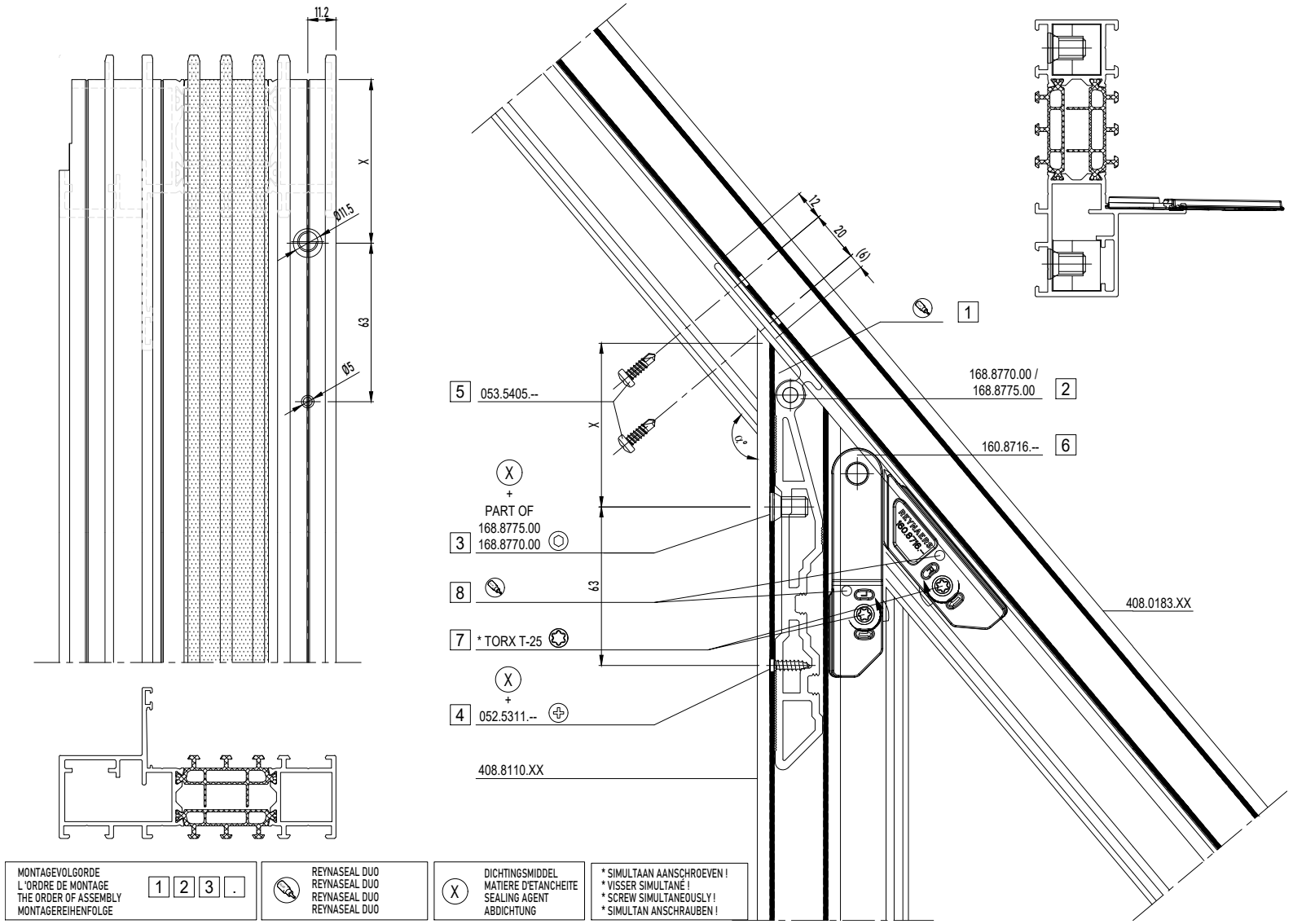

T VAR JIG

T-CONNECTION ADJUSTABLE

MASTERLINE 8-Fu

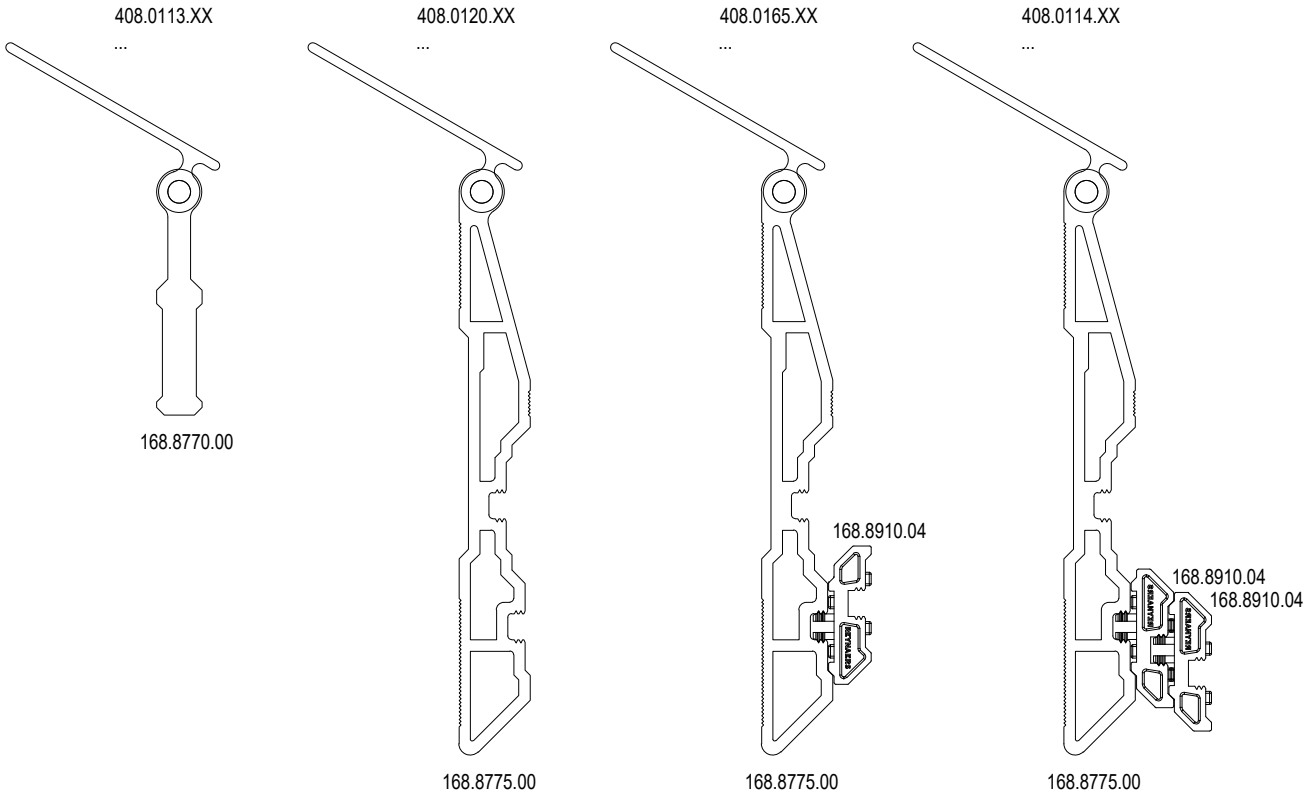

ARTIKELNUMMERS PER PROFIEL: RAADPLEEG HOOFDSTUK C
NUMÉROS DES ARTICLES PAR PROFIL: CONSULTEZ CHAPITRE C
ARTICLE NUMBERS BY PROFILE: CONSULT CHAPTER C
ARTIKEL REFERENZEN PRO PROFIL: SIEHE KAPITEL C

T VAR JIG

T-CONNECTION ADJUSTABLE

MASTERLINE 8-Fu

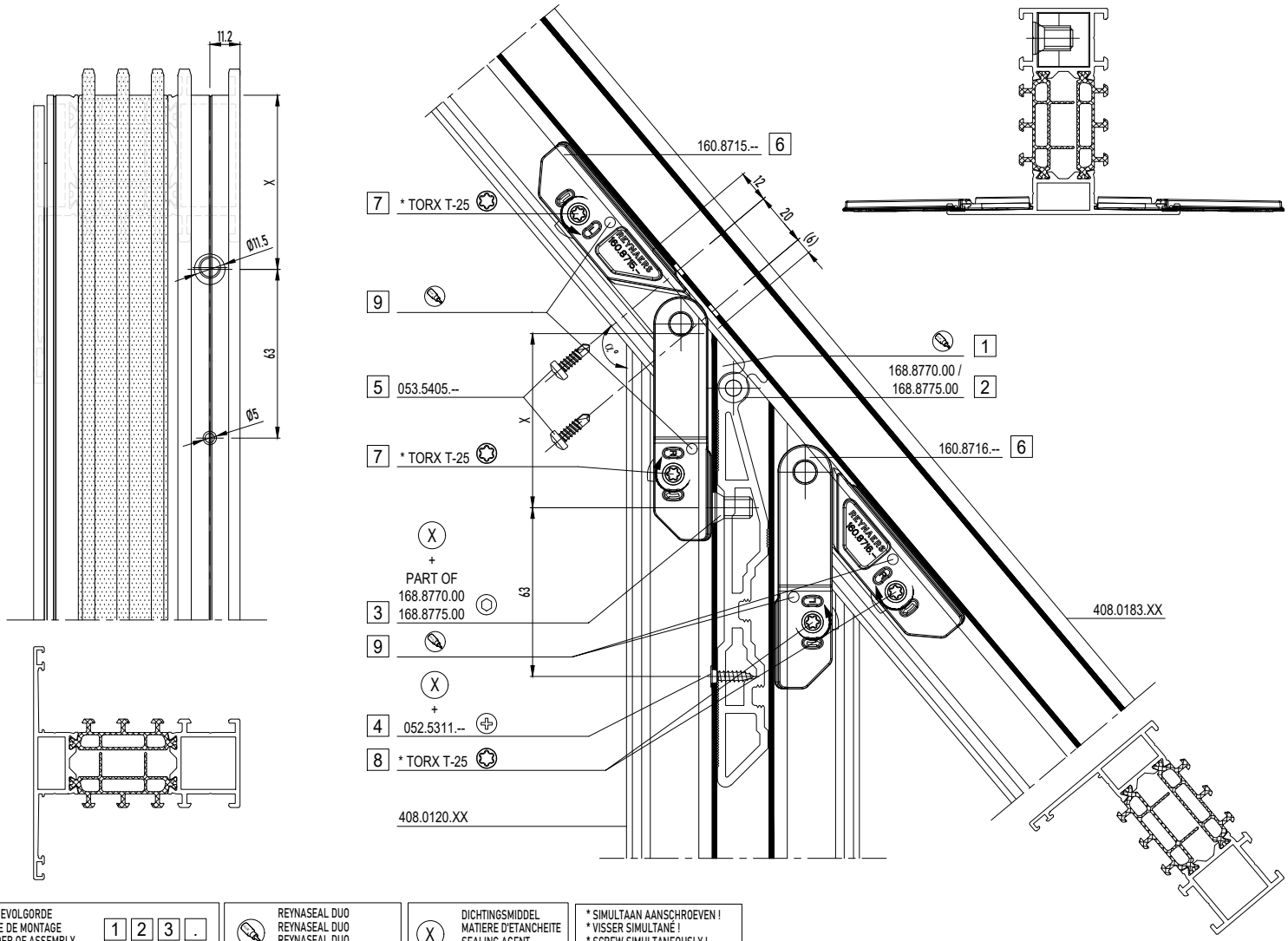

MONTAGEVOLGORDE L 'ORDRE DE MONTAGE THE ORDER OF ASSEMBLY MONTAGEREIHENFOLGE 1 2 3 .	REYNASEAL DUO REYNASEAL DUO REYNASEAL DUO REYNASEAL DUO	DICHTINGSMIDDEL MATIERE D'ETANCHEITE SEALING AGENT ABDICHTUNG	* SIMULTAAN AANSCHROEVEN ! * VISSER SIMULTANÉ ! * SCREW SIMULTANEOUSLY ! * SIMULTAN ANSCHRAUBEN !

T VAR JIG

T-CONNECTION ADJUSTABLE

MASTERLINE 8-Fu

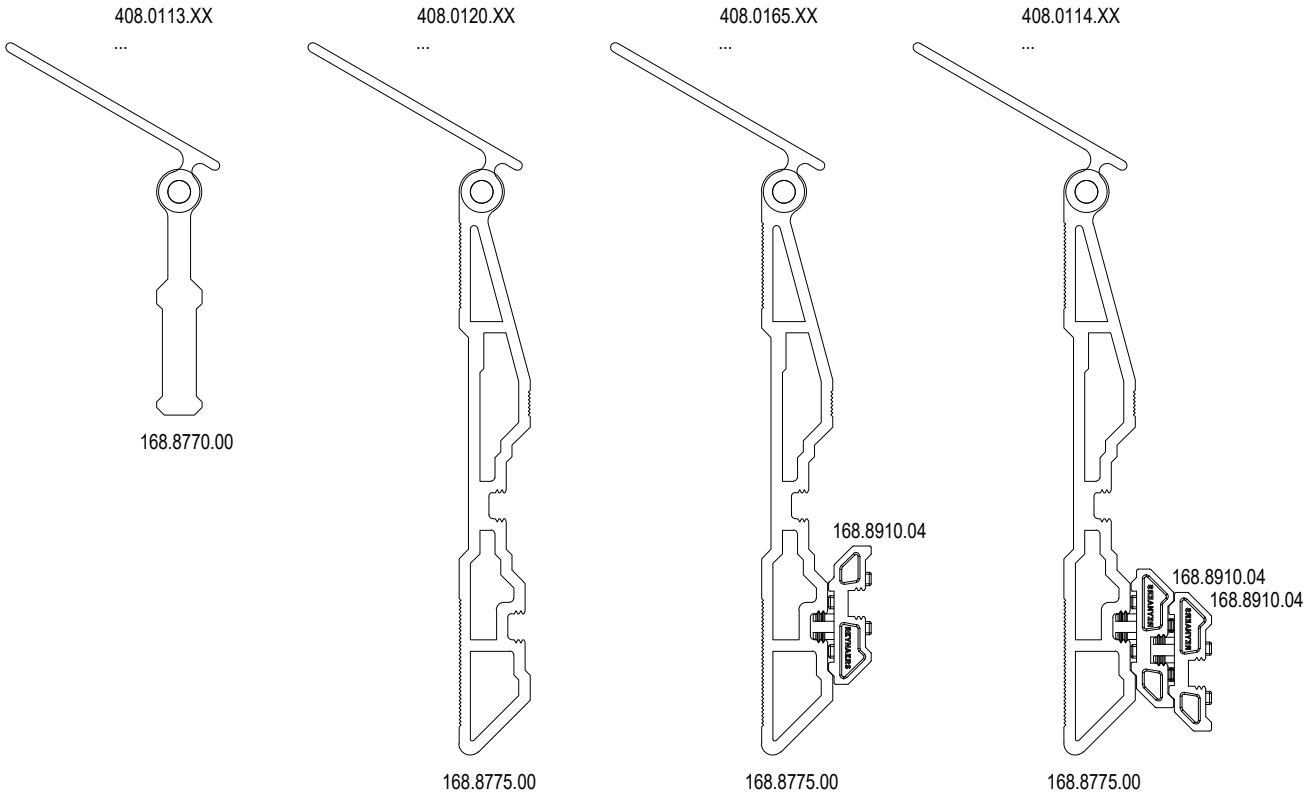

ARTIKELNUMMERS PER PROFIEL: RAADPLEEG HOOFDSTUK C
NUMÉROS DES ARTICLES PAR PROFIL: CONSULTEZ CHAPITRE C
ARTICLE NUMBERS BY PROFILE: CONSULT CHAPTER C
ARTIKEL REFERENZEN PRO PROFIL: SIEHE KAPITEL C

T VAR JIG

T-CONNECTION ADJUSTABLE

MASTERLINE 8-Fu

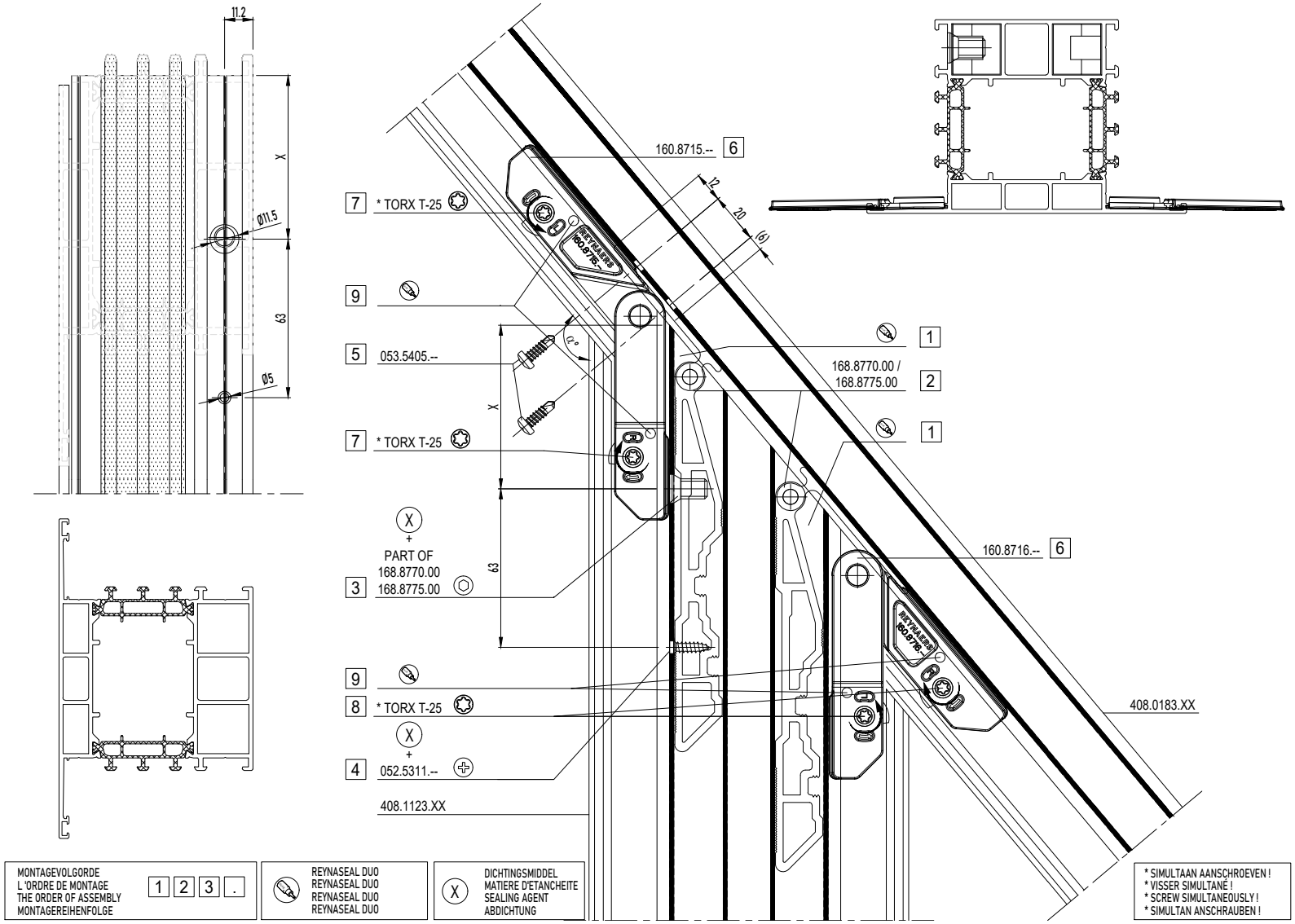

T VAR JIG

T-CONNECTION ADJUSTABLE

MASTERLINE 8-Fu

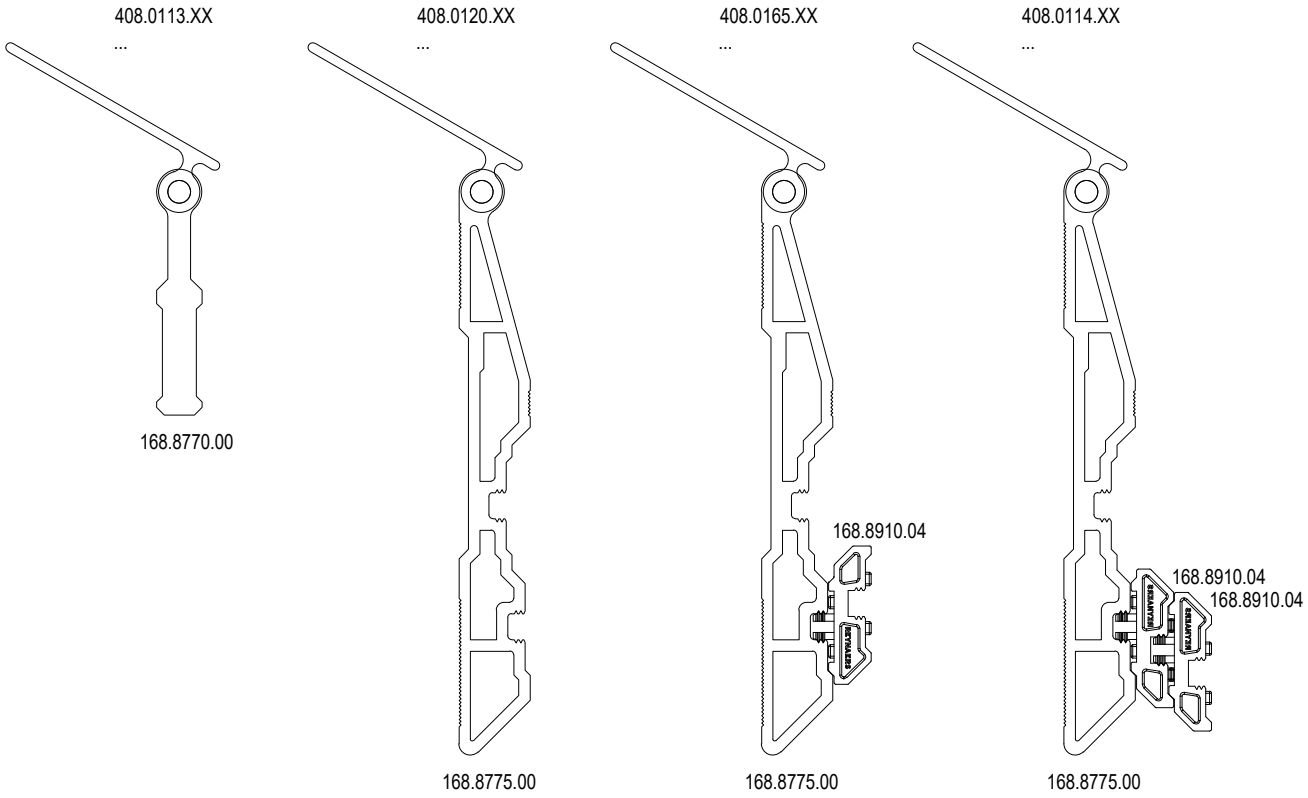

ARTIKELNUMMERS PER PROFIEL: RAADPLEEG HOOFDSTUK C
NUMÉROS DES ARTICLES PAR PROFIL: CONSULTEZ CHAPITRE C
ARTICLE NUMBERS BY PROFILE: CONSULT CHAPTER C
ARTIKEL REFERENZEN PRO PROFIL: SIEHE KAPITEL C

CORNER SCREW MC

GLUE INJECTION + CORNER CONNECTION 197.F900.00

MASTERLINE 8-Fu

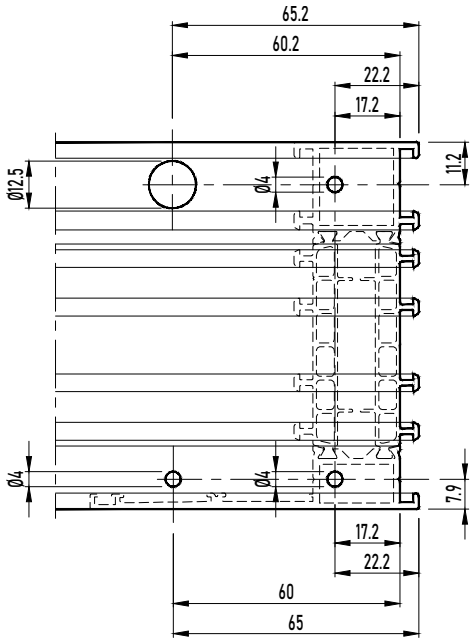

LIJMINJECTIE **NA** VERBINDING
INJECTION DE COLLE **APRÈS** LA CONNEXION
GLUE INJECTION **AFTER** CONNECTION
KLEBEINJEKTION **NACH** DEM ANSCHLUSS

CORNER SCREW MC

GLUE INJECTION + CORNER CONNECTION 197.F900.00

MASTERLINE 8-Fu

ALGEMEEN PRINCIPE
GENERAL PRINCIPE
GENERAL PRINCIPLE
ALLGEMEIN PRINZIP

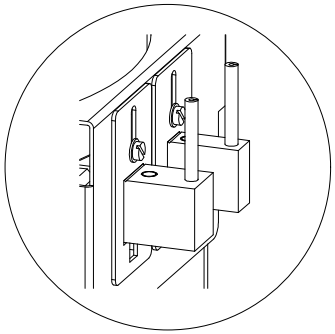



A



B

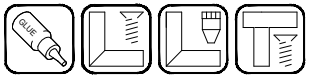

A + B

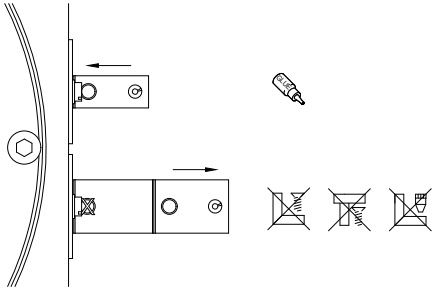

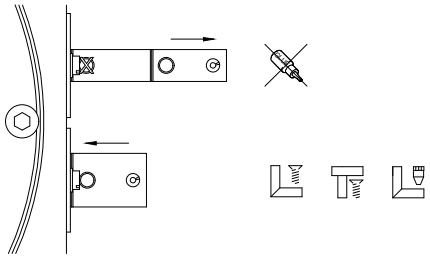

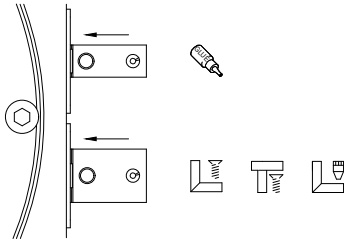

CORNER SCREW MC

GLUE INJECTION + CORNER CONNECTION 197.F900.00

MASTERLINE 8-Fu

A

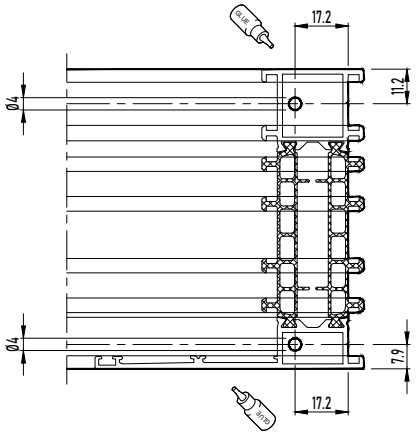

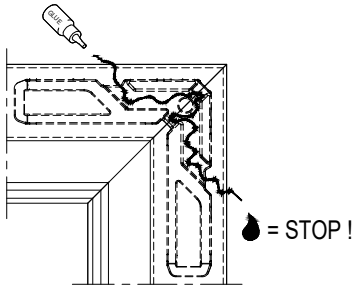

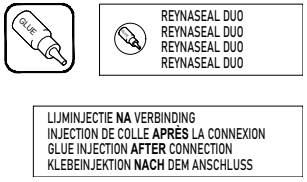

LIJMINJECTIE **NA** VERBINDING
INJECTION DE COLLE **APRÈS** LA CONNEXION
GLUE INJECTION **AFTER** CONNECTION
KLEBEINJEKTION **NACH** DEM ANSCHLUSS

CORNER SCREW MC

GLUE INJECTION + CORNER CONNECTION 197.F900.00

MASTERLINE 8-Fu

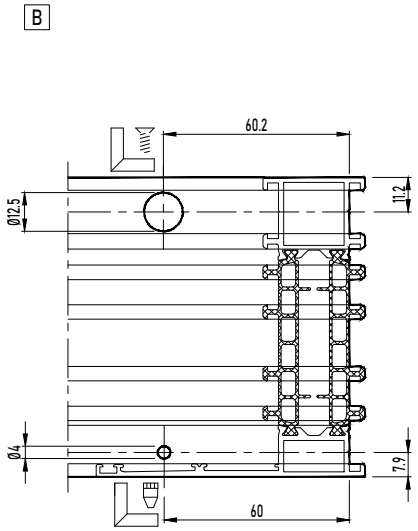

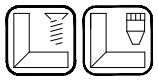

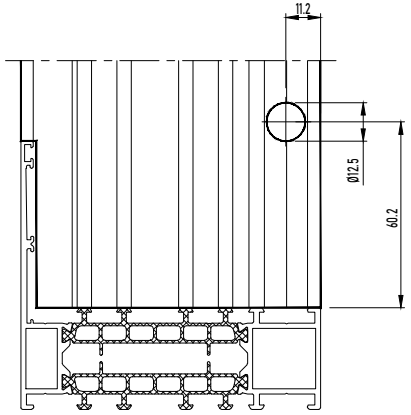

LIJMINJECTIE VOOR VERBINDING
INJECTION DE COLLE AVANT LA CONNEXION
GLUE INJECTION BEFORE CONNECTION
KLEBEINJEKTION VOR ANSCHLUSS



CORNER SCREW MC

GLUE INJECTION + CORNER CONNECTION 197.F900.00

MASTERLINE 8-Fu

A + B

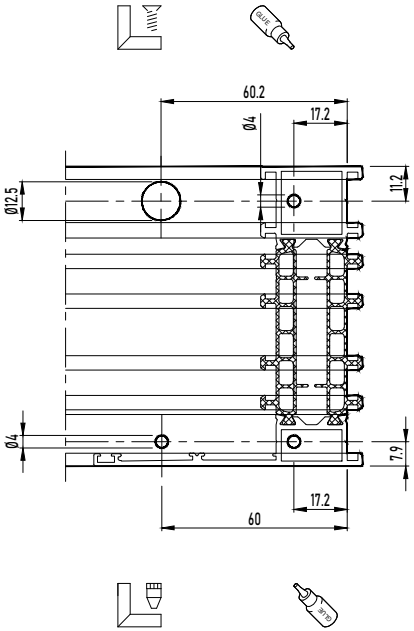

Aanpassing diameter: zie handleiding 197.F900.00
Modification diamètre: voir manuel 197.F900.00
Change size diameter: see manual 197.F900.00
Wechsel Durchmesser: siehe Gebrauchsanweisung 197.F900.00

MONTAGEVOLGORDE L 'ORDRE DE MONTAGE THE ORDER OF ASSEMBLY MONTAGEREIHENFOLGE	1 2 3 .

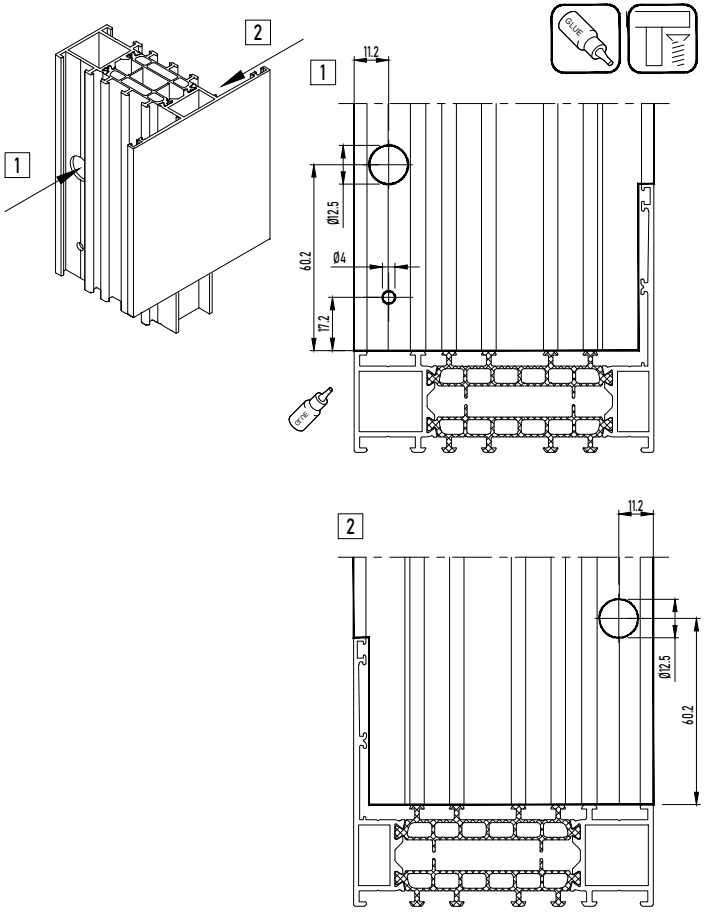

LIJMINJECTIE **NA** VERBINDING
INJECTION DE COLLE **APRÈS** LA CONNEXION
GLUE INJECTION **AFTER** CONNECTION
KLEBEINJEKTION **NACH** DEM ANSCHLUSS

CORNER SCREW MC

GLUE INJECTION + CORNER CONNECTION 197.F900.00

MASTERLINE 8-Fu

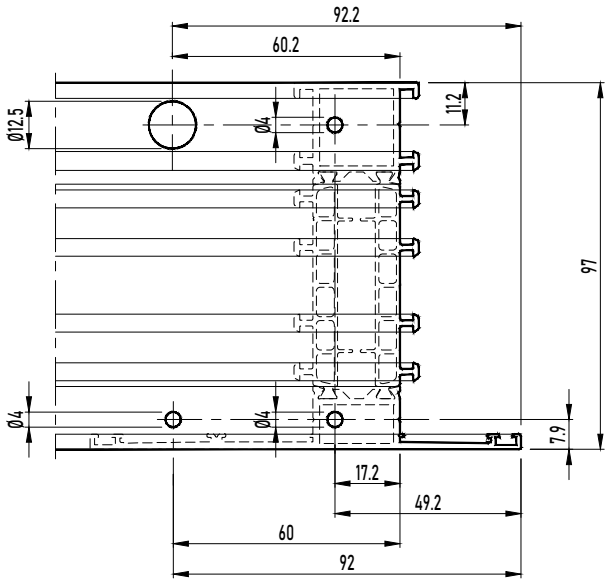

LIJMINJECTIE **NA** VERBINDING
INJECTION DE COLLE **APRÈS** LA CONNEXION
GLUE INJECTION **AFTER** CONNECTION
KLEBEINJEKTION **NACH** DEM ANSCHLUSS

CORNER SCREW MC

GLUE INJECTION + CORNER CONNECTION 197.F900.00

MASTERLINE 8-Fu

ALGEMEEN PRINCIPE
GENERAL PRINCIPE
GENERAL PRINCIPLE
ALLGEMEIN PRINZIP

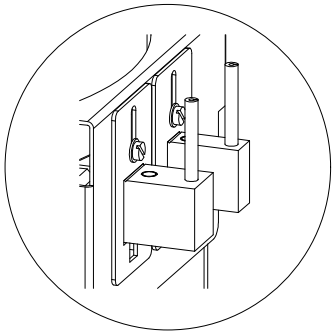



A



B

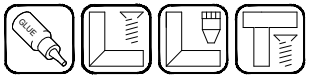

A + B

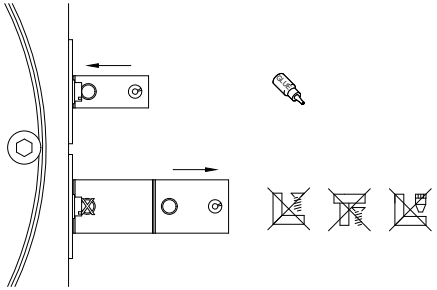

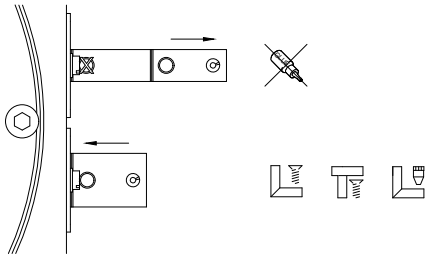

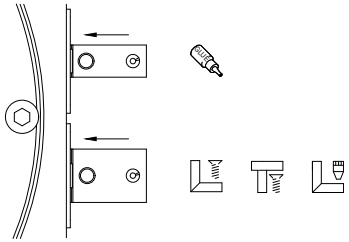

CORNER SCREW MC

GLUE INJECTION + CORNER CONNECTION 197.F900.00

MASTERLINE 8-Fu

A

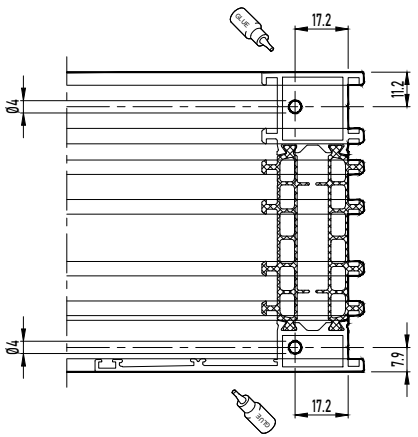

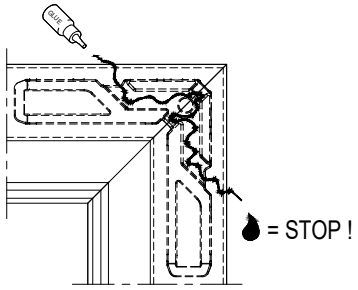

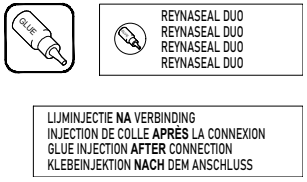

LIJMINJECTIE **NA** VERBINDING
INJECTION DE COLLE **APRÈS** LA CONNEXION
GLUE INJECTION **AFTER** CONNECTION
KLEBEINJEKTION **NACH** DEM ANSCHLUSS

CORNER SCREW MC

GLUE INJECTION + CORNER CONNECTION 197.F900.00

MASTERLINE 8-Fu

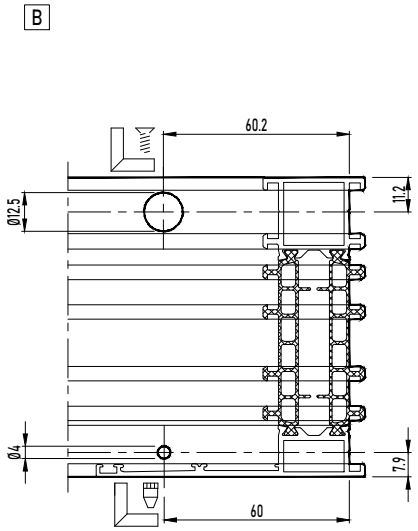

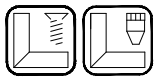

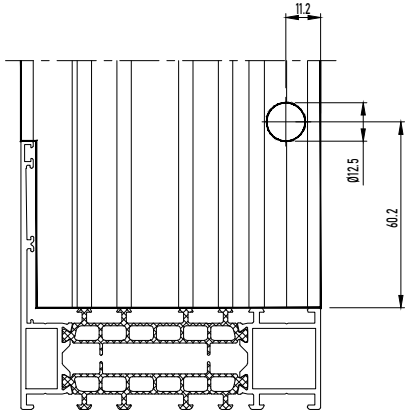

LIJMINJECTIE VOOR VERBINDING
INJECTION DE COLLE AVANT LA CONNEXION
GLUE INJECTION BEFORE CONNECTION
KLEBEINJEKTION VOR ANSCHLUSS



CORNER SCREW MC

GLUE INJECTION + CORNER CONNECTION 197.F900.00

MASTERLINE 8-Fu

A + B

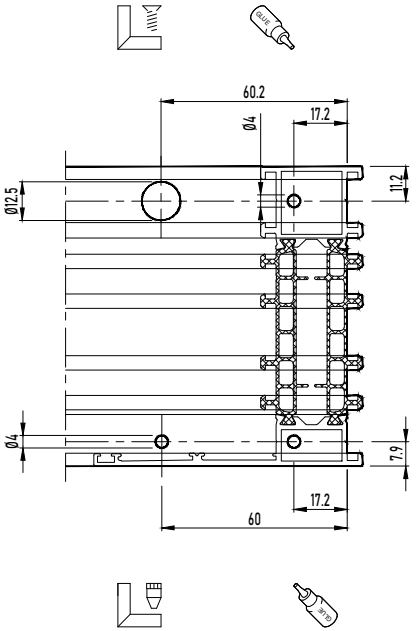

Aanpassing diameter: zie handleiding 197.F900.00
Modification diamètre: voir manuel 197.F900.00
Change size diameter: see manual 197.F900.00
Wechsel Durchmesser: siehe Gebrauchsanweisung 197.F900.00

MONTAGEVOLGORDE L'ORDRE DE MONTAGE THE ORDER OF ASSEMBLY MONTAGEREIHENFOLGE	1 2 3 .

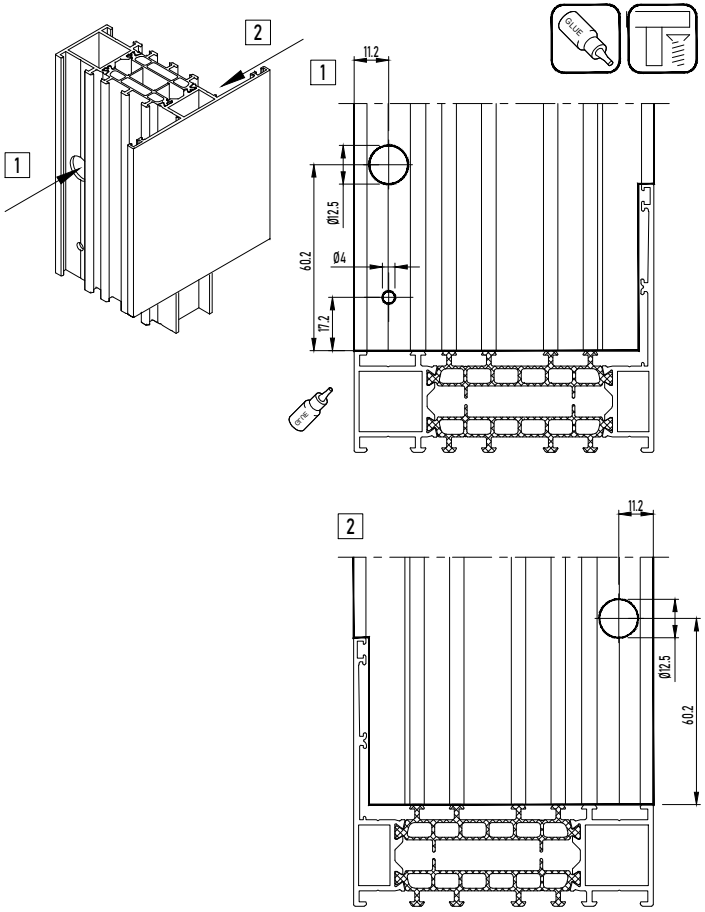

LIJMINJECTIE **NA** VERBINDING
INJECTION DE COLLE **APRÈS** LA CONNEXION
GLUE INJECTION **AFTER** CONNECTION
KLEBEINJEKTION **NACH** DEM ANSCHLUSS

CORNER SCREW MC

GLUE INJECTION + CORNER CONNECTION 197.F900.00

MASTERLINE 8-Fu

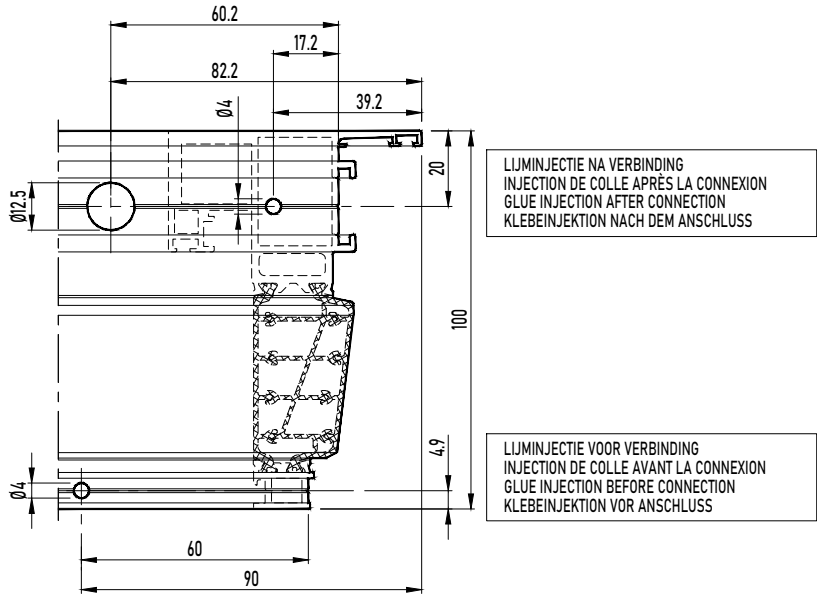

LIJMINJECTIE NA VERBINDING
INJECTION DE COLLE APRÈS LA CONNEXION
GLUE INJECTION AFTER CONNECTION
KLEBEINJEKTION NACH DEM ANSCHLUSS

CORNER SCREW MC

GLUE INJECTION + CORNER CONNECTION 197.F900.00

MASTERLINE 8-Fu

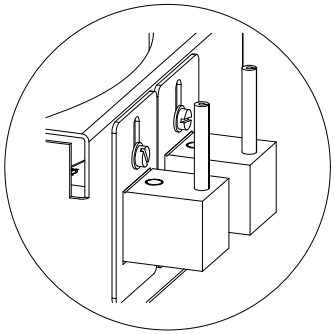

ALGEMEEN PRINCIPE
GENERAL PRINCIPE
GENERAL PRINCIPLE
ALLGEMEIN PRINZIP



A

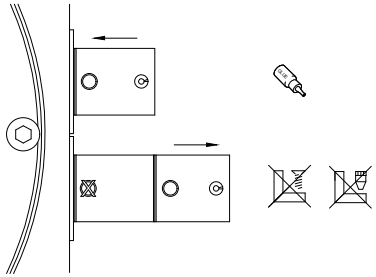

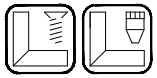

B

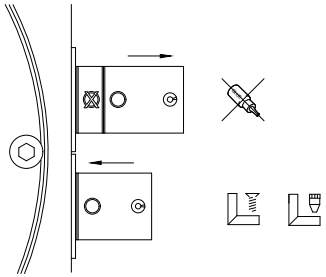



A + B

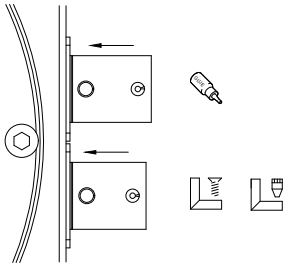

CORNER SCREW MC

GLUE INJECTION + CORNER CONNECTION 197.F900.00

MASTERLINE 8-Fu

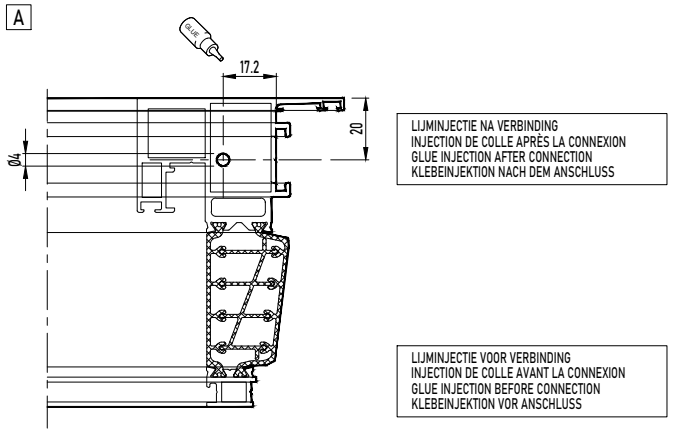

LIJMINJECTIE NA VERBINDING
INJECTION DE COLLE APRÈS LA CONNEXION
GLUE INJECTION AFTER CONNECTION
KLEBEINJEKTION NACH DEM ANSCHLUSS

LIJMINJECTIE VOOR VERBINDING
INJECTION DE COLLE AVANT LA CONNEXION
GLUE INJECTION BEFORE CONNECTION
KLEBEINJEKTION VOR ANSCHLUSS

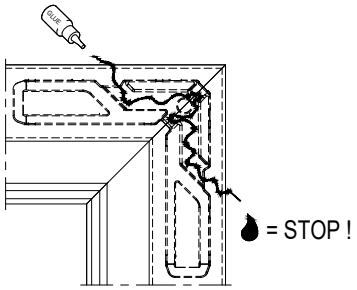



REYNASEAL DUO
REYNASEAL DUO
REYNASEAL DUO
REYNASEAL DUO

CORNER SCREW MC

GLUE INJECTION + CORNER CONNECTION 197.F900.00

MASTERLINE 8-Fu

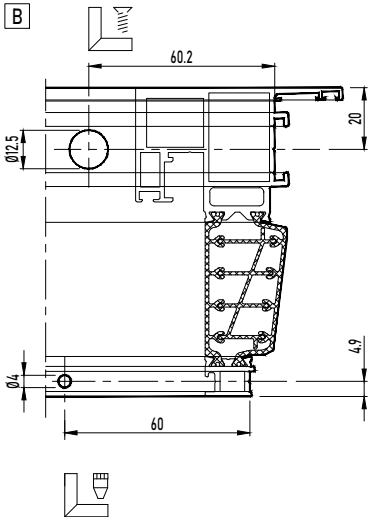

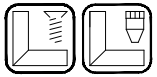

LIJMINJECTIE VOOR VERBINDING
INJECTION DE COLLE AVANT LA CONNEXION
GLUE INJECTION BEFORE CONNECTION
KLEBEINJEKTION VOR ANSCHLUSS

CORNER SCREW MC

GLUE INJECTION + CORNER CONNECTION 197.F900.00

MASTERLINE 8-Fu

A + B

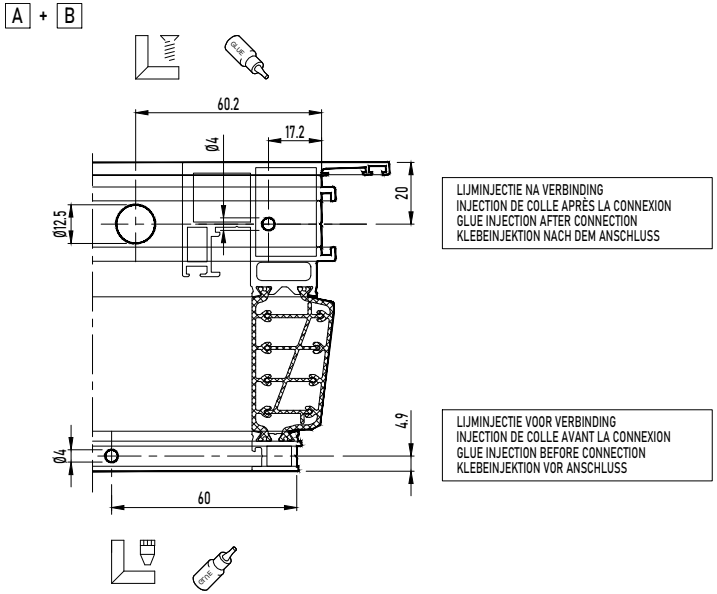

LIJMINJECTIE NA VERBINDING
INJECTION DE COLLE APRÈS LA CONNEXION
GLUE INJECTION AFTER CONNECTION
KLEBEINJEKTION NACH DEM ANSCHLUSS

LIJMINJECTIE VOOR VERBINDING
INJECTION DE COLLE AVANT LA CONNEXION
GLUE INJECTION BEFORE CONNECTION
KLEBEINJEKTION VOR ANSCHLUSS



REYNASEAL DUO
REYNASEAL DUO
REYNASEAL DUO
REYNASEAL DUO

MONTAGEVOLGORDE
L'ORDRE DE MONTAGE
THE ORDER OF ASSEMBLY
MONTAGEREIHENFOLGE

1 2 3 .



CORNER SCREW MC

GLUE INJECTION + CORNER CONNECTION 197.F900.00

MASTERLINE 8-Fu

UITZONDERING: TEXT HOEKVERBINDER NAAR BINNEN GERICHT
EXCEPTION: TEXTE SUR L'ÉQUERRE VERS L'INTERIEUR
EXCEPTION: TEXT CORNER CLEAT FACING INWARD
AUSNAHME: TEXT ECKVERBINDER NACH INNEN GERICHTET

LIJMINJECTIE **NA** VERBINDING
INJECTION DE COLLE **APRÈS** LA CONNEXION
GLUE INJECTION **AFTER** CONNECTION
KLEBEINJEKTION **NACH** DEM ANSCHLUSS

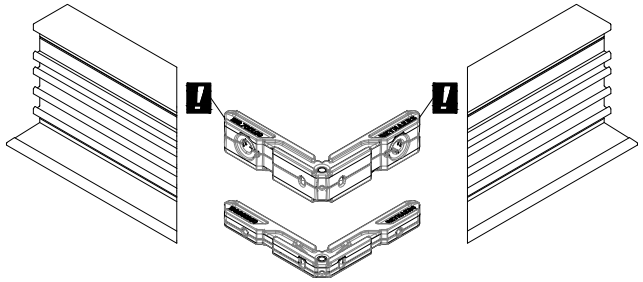

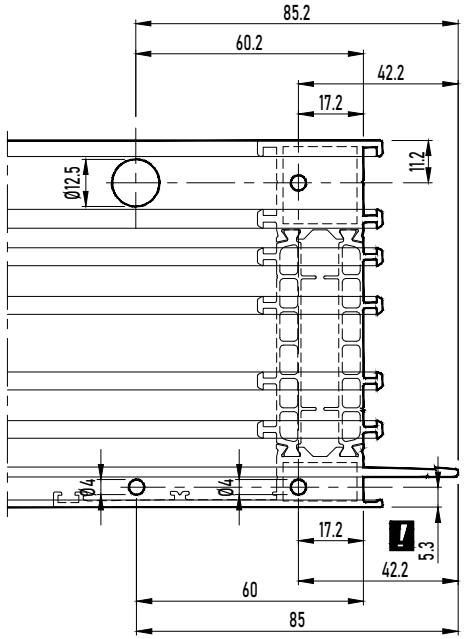

CORNER SCREW MC

GLUE INJECTION + CORNER CONNECTION 197.F900.00

MASTERLINE 8-Fu

ALGEMEEN PRINCIPE
GENERAL PRINCIPE
GENERAL PRINCIPLE
ALLGEMEIN PRINZIP

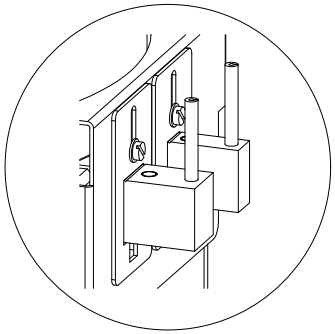



A



B

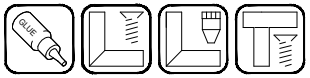

A + B

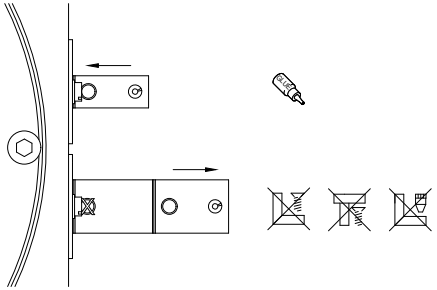

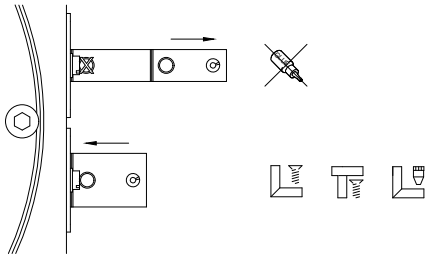

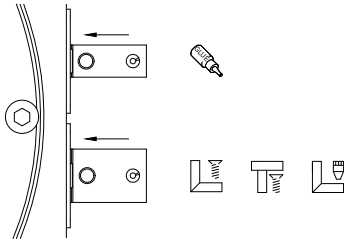

CORNER SCREW MC

GLUE INJECTION + CORNER CONNECTION 197.F900.00

MASTERLINE 8-Fu

A

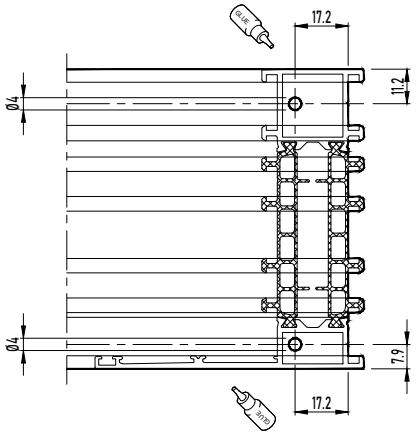

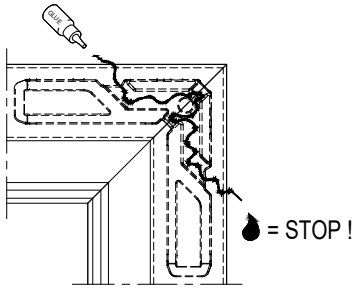

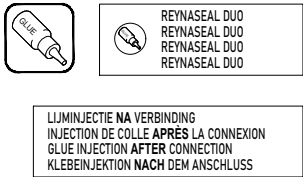

LIJMINJECTIE **NA** VERBINDING
INJECTION DE COLLE **APRÈS** LA CONNEXION
GLUE INJECTION **AFTER** CONNECTION
KLEBEINJEKTION **NACH** DEM ANSCHLUSS

CORNER SCREW MC

GLUE INJECTION + CORNER CONNECTION 197.F900.00

MASTERLINE 8-Fu

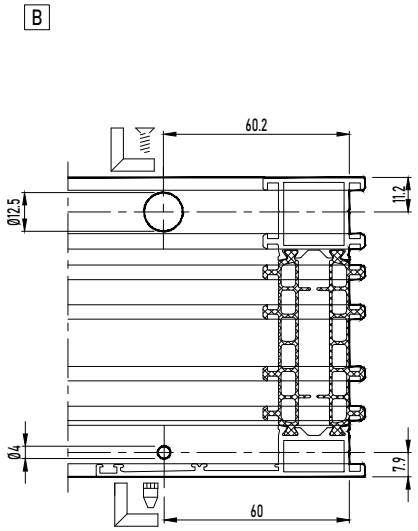

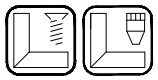

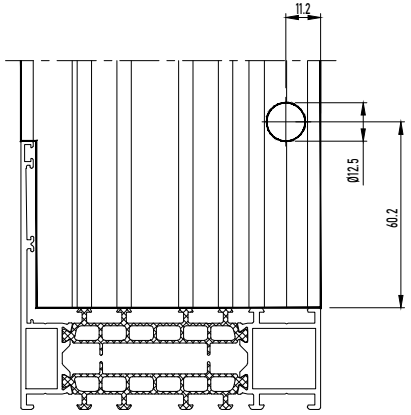

LIJMINJECTIE VOOR VERBINDING
INJECTION DE COLLE AVANT LA CONNEXION
GLUE INJECTION BEFORE CONNECTION
KLEBEINJEKTION VOR ANSCHLUSS



CORNER SCREW MC

GLUE INJECTION + CORNER CONNECTION 197.F900.00

MASTERLINE 8-Fu

A + B

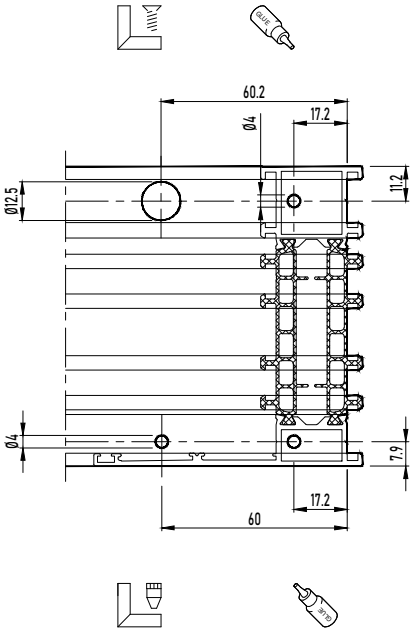

Aanpassing diameter: zie handleiding 197.F900.00
Modification diamètre: voir manuel 197.F900.00
Change size diameter: see manual 197.F900.00
Wechsel Durchmesser: siehe Gebrauchsanweisung 197.F900.00

MONTAGEVOLGORDE L'ORDRE DE MONTAGE THE ORDER OF ASSEMBLY MONTAGEREIHENFOLGE	1 2 3 .

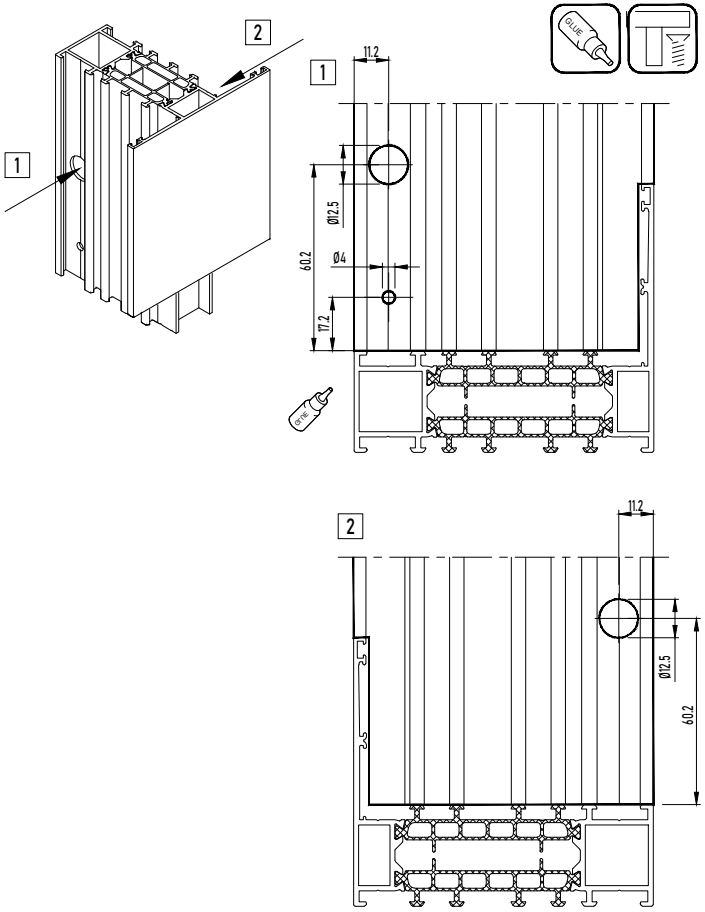

LIJMINJECTIE **NA** VERBINDING
INJECTION DE COLLE **APRÈS** LA CONNEXION
GLUE INJECTION **AFTER** CONNECTION
KLEBEINJEKTION **NACH** DEM ANSCHLUSS

CORNER SCREW MC

GLUE INJECTION + CORNER CONNECTION 197.F900.00 | 097.0183.00

MASTERLINE 8-Fu

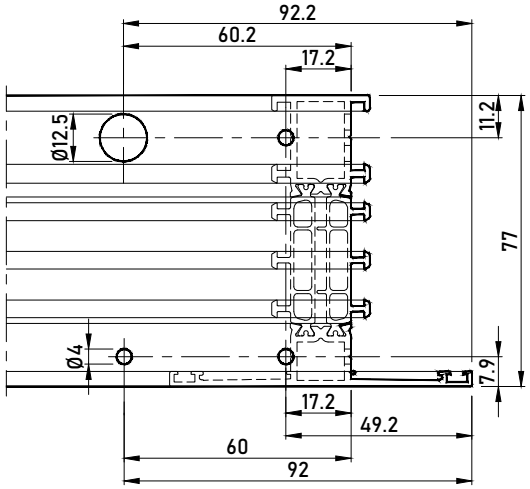

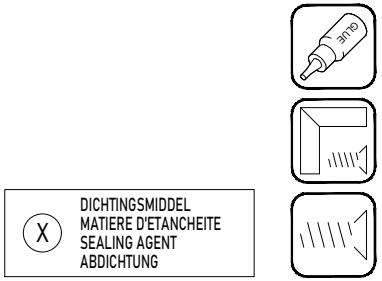

CORNER SCREW MC

GLUE INJECTION + CORNER CONNECTION 197.F900.00 | 097.0183.00

MASTERLINE 8-Fu

ALGEMEEN PRINCIPE
GENERAL PRINCIPE
GENERAL PRINCIPLE
ALLGEMEIN PRINZIP

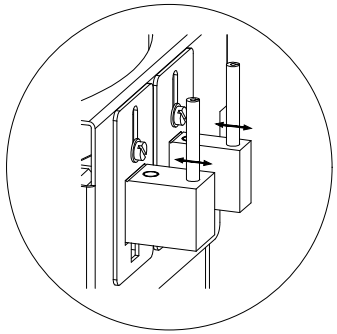



A

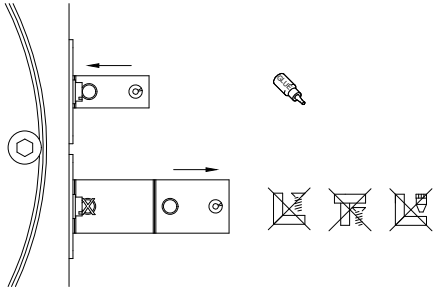



B

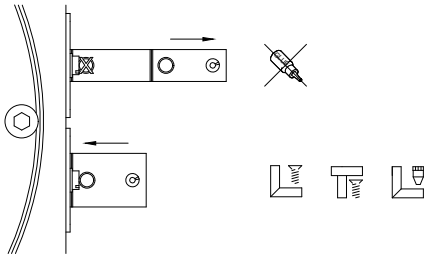

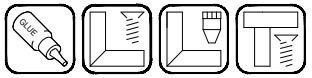

A + B

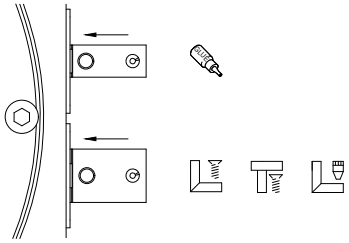

CORNER SCREW MC

GLUE INJECTION + CORNER CONNECTION 197.D800.00

MASTERLINE 8-Fu

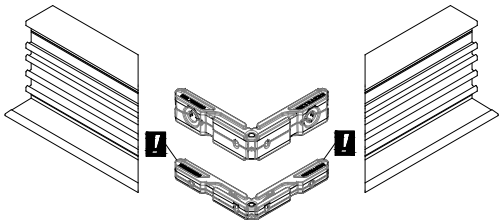

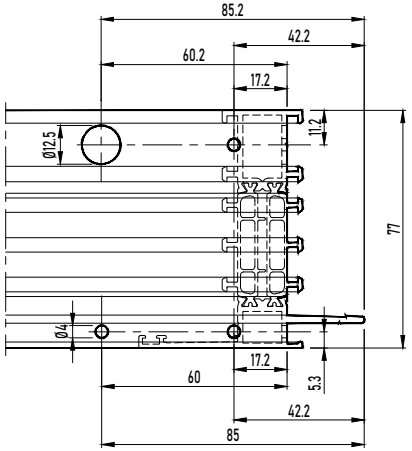

UITZONDERING: TEXT HOEKVERBINDER NAAR BINNEN GERICHT
EXCEPTION: TEXTE SUR L'ÉQUERRE VERS L'INTERIEUR
EXCEPTION: TEXT CORNER CLEAT FACING INWARD
AUSNAHME: TEXT ECKVERBINDER NACH INNEN GERICHTET

CORNER SCREW MC

GLUE INJECTION + CORNER CONNECTION 197.D800.00

MASTERLINE 8-Fu

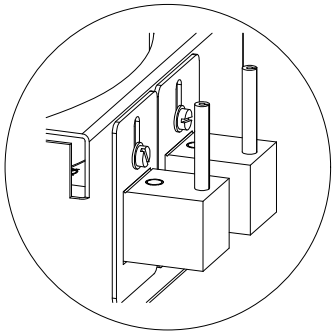

ALGEMEEN PRINCIPE
GENERAL PRINCIPE
GENERAL PRINCIPLE
ALLGEMEIN PRINZIP
GENERAL PRONCIPIO



A

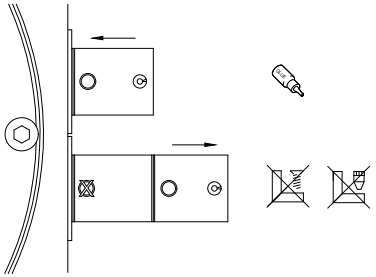

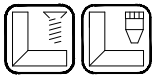

B

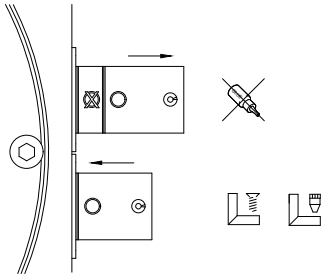



A + B

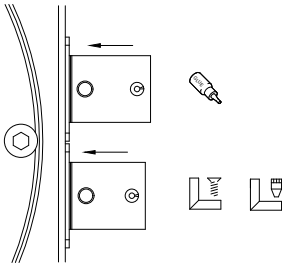

CORNER SCREW MC

GLUE INJECTION + CORNER CONNECTION 197.D800.00

MASTERLINE 8-Fu

A

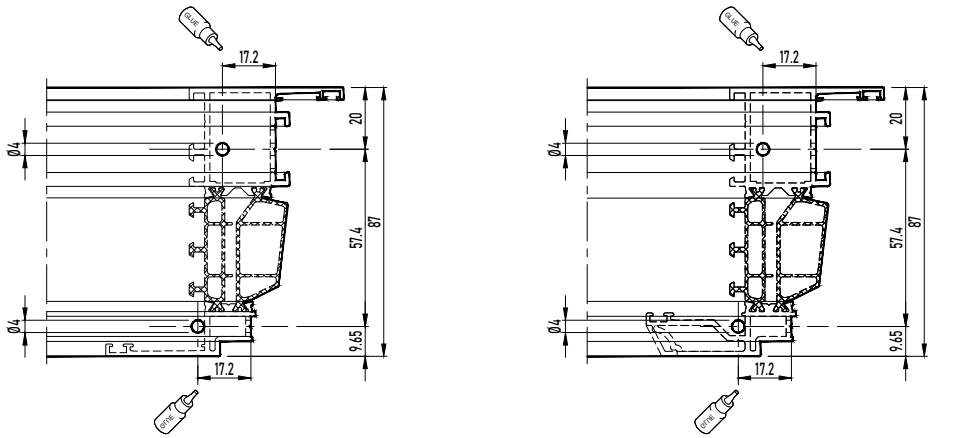

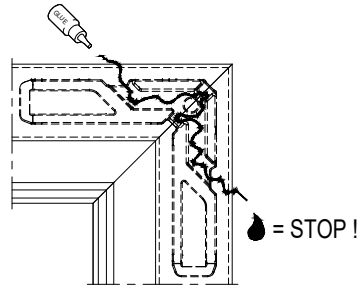



REYNASEAL DUO
REYNASEAL DUO
REYNASEAL DUO
REYNASEAL DUO

LIJMINJECTIE NA VERBINDING
INJECTION DE COLLE APRÈS LA CONNEXION
GLUE INJECTION AFTER CONNECTION
KLEBEINJEKTION NACH DEM ANSCHLUSS

B

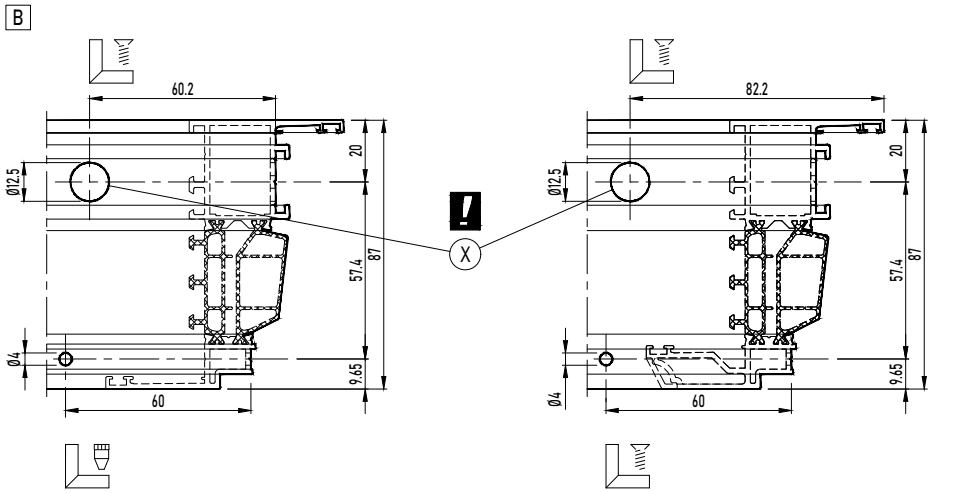

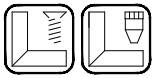

X DICHTINGSMIDDEL
MATIERE D'ETANCHEITE
SEALING AGENT
ABDICHTUNG
SELLANTE
MASA USZCZELNIAJACA

LIJMINJECTIE NA VERBINDING
INJECTION DE COLLE APRÈS LA CONNEXION
GLUE INJECTION AFTER CONNECTION
KLEBEINJEKTION NACH DEM ANSCHLUSS



Aanpassing diameter: zie handleiding 197.B700.00 / Modification diamètre: voir manuel 197.B700.00
Change size diameter: see manual 197.B700.00 / Wechsel Durchmesser: siehe Gebrauchsanweisung 197.B700.00

CORNER SCREW MC

GLUE INJECTION + CORNER CONNECTION 197.D800.00

MASTERLINE 8-Fu

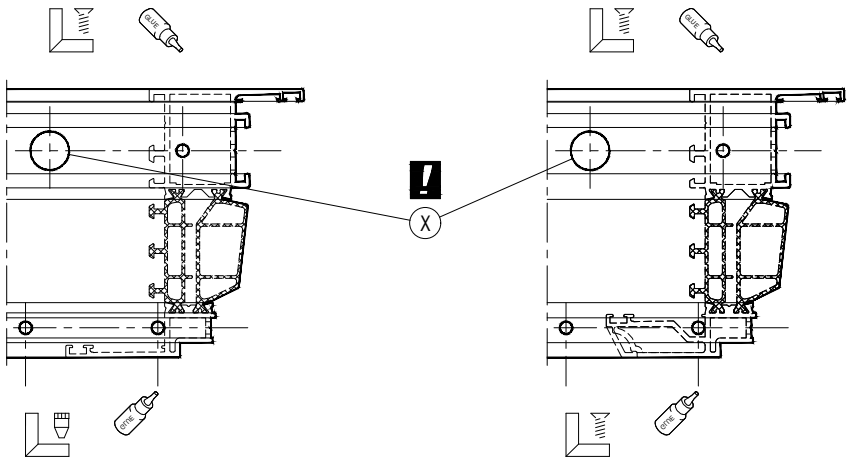

Aanpassing diameter: zie handleiding 197.B600.00
Modification diamètre: voir manuel 197.B600.00
Change size diameter: see manual 197.B600.00
Wechsel Durchmesser: siehe Gebrauchsanweisung 197.B600.00

MONTAGEVOLGORDE
L'ORDRE DE MONTAGE
THE ORDER OF ASSEMBLY
MONTAGEREIHENFOLGE
ORDEN DE MONTAJE
KOLEJNOSC MONTAZU

1 2 3 .

X DICHTINGSMIDDEL
MATIERE D'ETANCHEITE
SEALING AGENT
ABDICHTUNG
SELLANTE
MASA USZCZELNIAJACA

LIJMINJECTIE NA VERBINDING
INJECTION DE COLLE APRÈS LA CONNEXION
GLUE INJECTION AFTER CONNECTION
KLEBEINJEKTION NACH DEM ANSCHLUSS

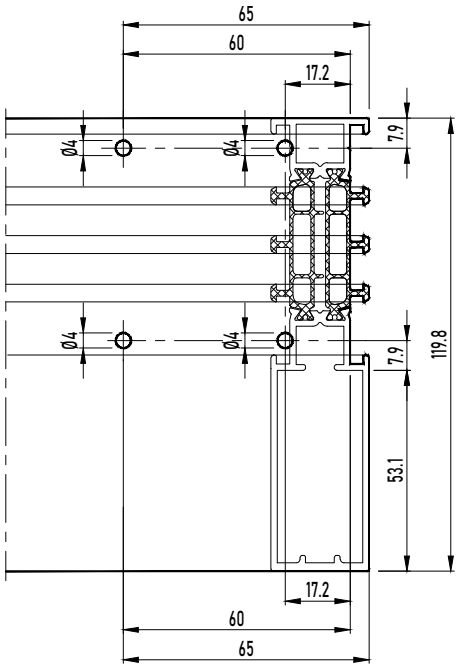
65
60
17.2
Ø4
Ø4
7.9
Ø4
Ø4
7.9
119.8
53.1
17.2
60
65

CORNER SCREW MC

GLUE INJECTION + CORNER CONNECTION 197.D800.00

MASTERLINE 8-Fu

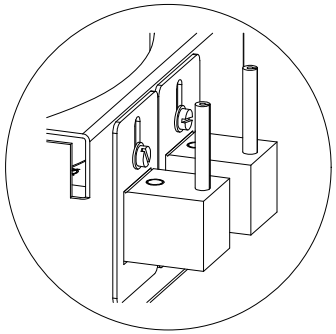

ALGEMEEN PRINCIPE
GENERAL PRINCIPE
GENERAL PRINCIPLE
ALLGEMEIN PRINZIP



A

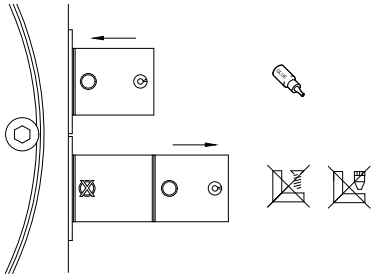

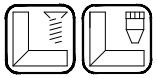

B

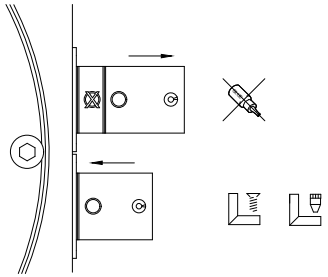



A + B

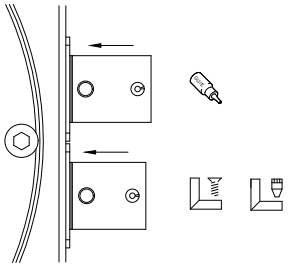

CORNER SCREW MC

GLUE INJECTION + CORNER CONNECTION 197.D800.00

MASTERLINE 8-Fu

A

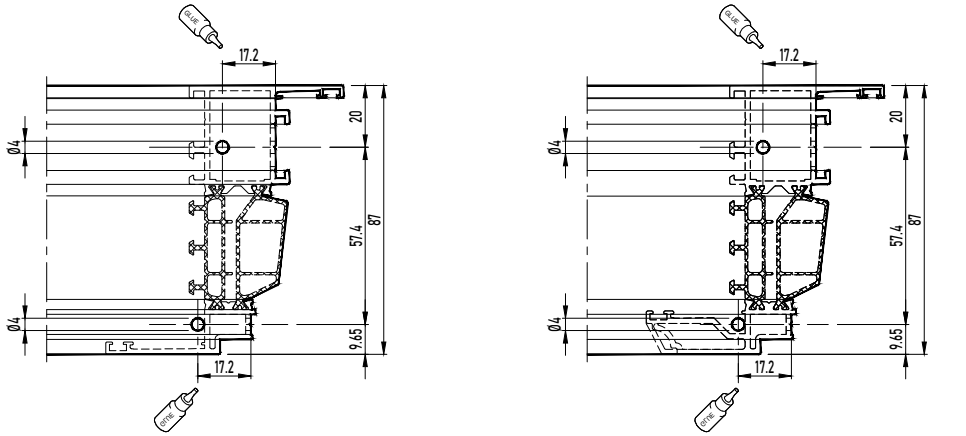

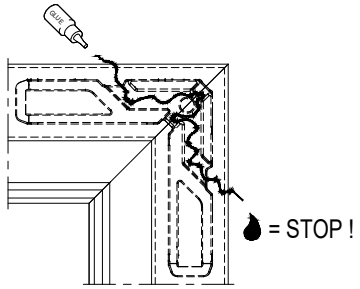

REYNASEAL DUO
REYNASEAL DUO
REYNASEAL DUO
REYNASEAL DUO

LIJMINJECTIE NA VERBINDING
INJECTION DE COLLE APRÈS LA CONNEXION
GLUE INJECTION AFTER CONNECTION
KLEBEINJEKTION NACH DEM ANSCHLUSS

B

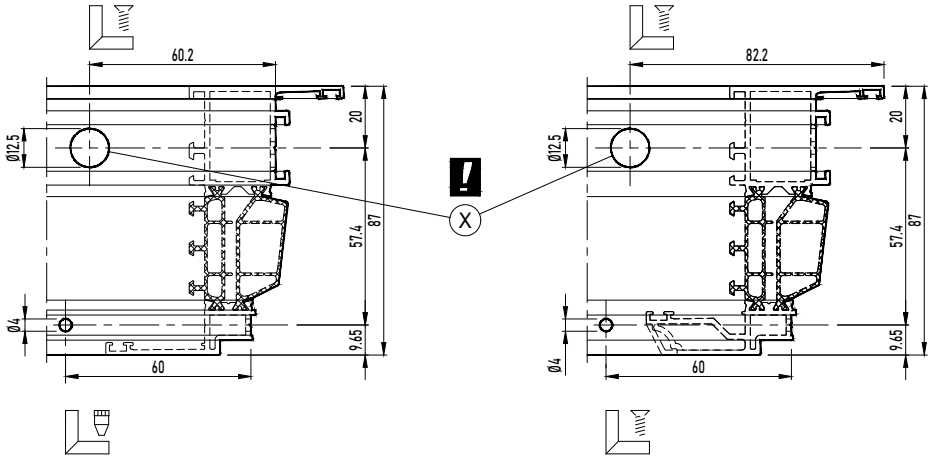

Aanpassing diameter: zie handleiding 197.B700.00 / Modification diamètre: voir manuel 197.B700.00
Change size diameter: see manual 197.B700.00 / Wechsel Durchmesser: siehe Gebrauchsanweisung 197.B700.00

X DICHTINGSMIDDEL
MATIERE D'ETANCHEITE
SEALING AGENT
ABDICHTUNG

LIJMINJECTIE NA VERBINDING
INJECTION DE COLLE APRÈS LA CONNEXION
GLUE INJECTION AFTER CONNECTION
KLEBEINJEKTION NACH DEM ANSCHLUSS

CORNER SCREW MC

GLUE INJECTION + CORNER CONNECTION 197.D800.00

MASTERLINE 8-Fu

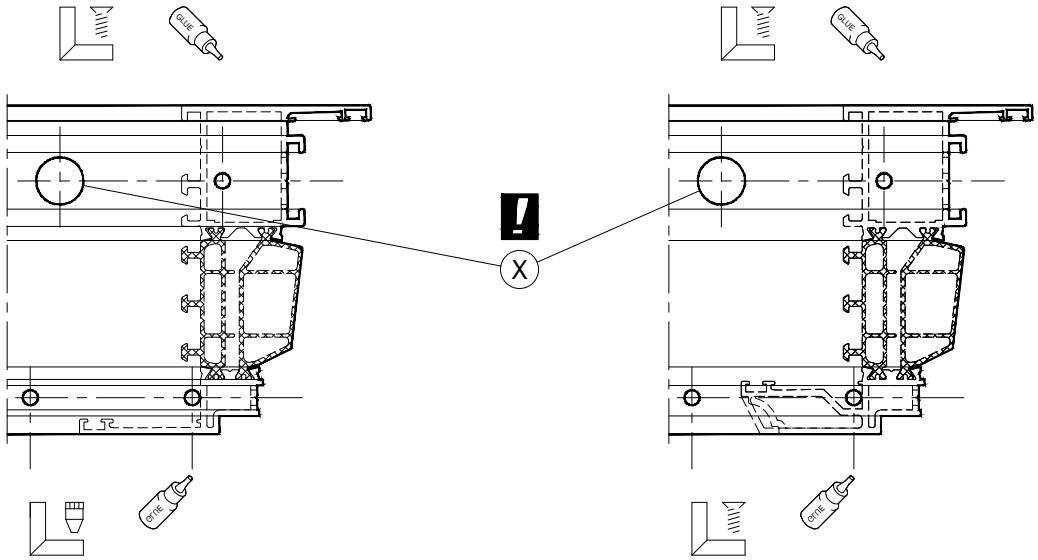

Aanpassing diameter: zie handleiding 197.B600.00
Modification diamètre: voir manuel 197.B600.00
Change size diameter: see manual 197.B600.00
Wechsel Durchmesser: siehe Gebrauchsanweisung 197.B600.00

MONTAGEVOLGORDE L 'ORDRE DE MONTAGE THE ORDER OF ASSEMBLY MONTAGEREIHENFOLGE	1 2 3 .

CORNER SCREW MC

GLUE INJECTION + CORNER CONNECTION 197.D800.00

MASTERLINE 8-Fu

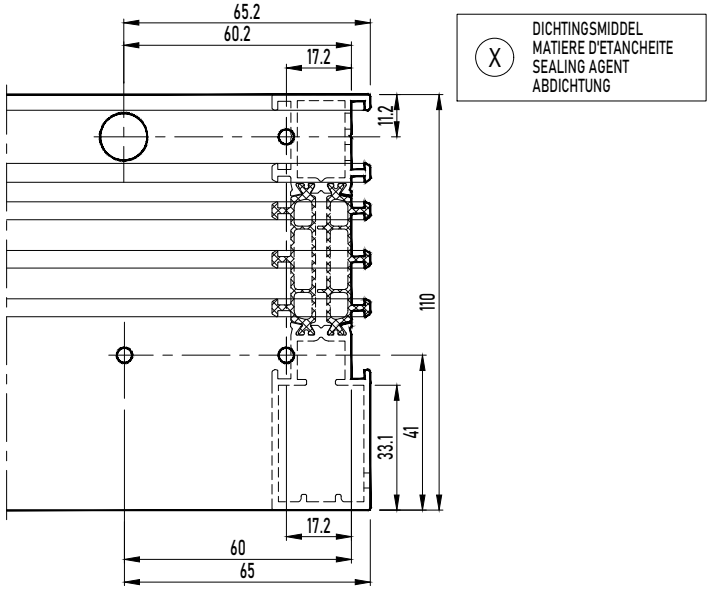

CORNER SCREW MC

GLUE INJECTION + CORNER CONNECTION 197.D800.00

MASTERLINE 8-Fu

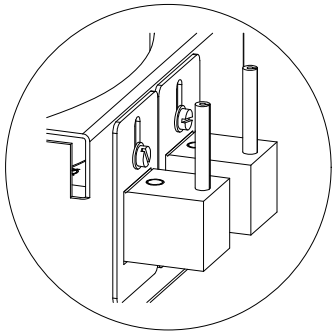

ALGEMEEN PRINCIPE
GENERAL PRINCIPE
GENERAL PRINCIPLE
ALLGEMEIN PRINZIP



A

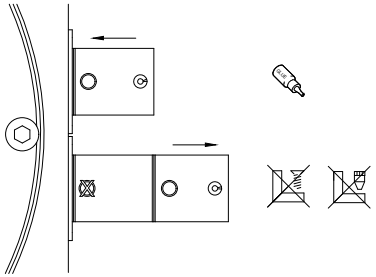

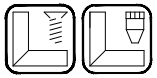

B

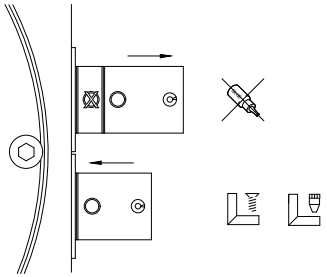



A + B

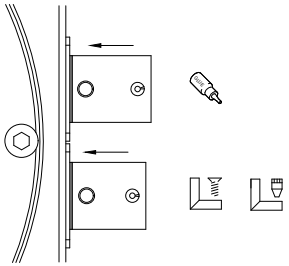

CORNER SCREW MC

GLUE INJECTION + CORNER CONNECTION 197.D800.00

MASTERLINE 8-Fu

A

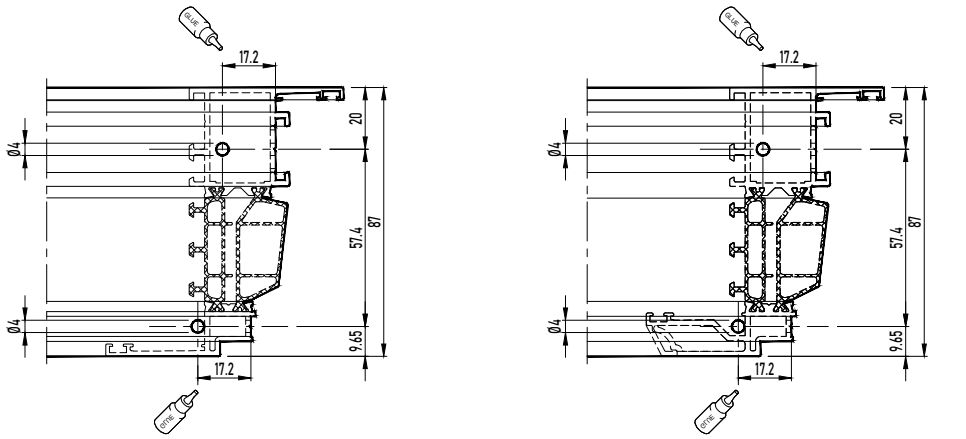

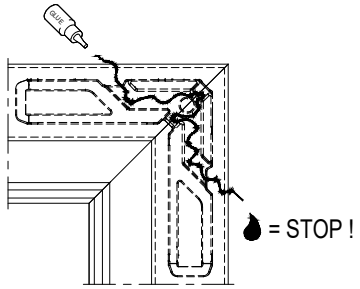

REYNASEAL DUO
REYNASEAL DUO
REYNASEAL DUO
REYNASEAL DUO

LIJMINJECTIE NA VERBINDING
INJECTION DE COLLE APRÈS LA CONNEXION
GLUE INJECTION AFTER CONNECTION
KLEBEINJEKTION NACH DEM ANSCHLUSS

B

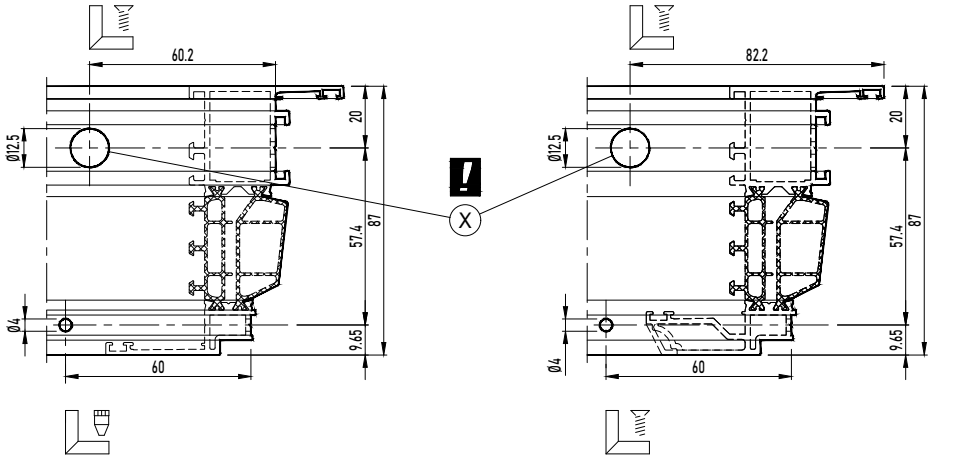

Aanpassing diameter: zie handleiding 197.B700.00 / Modification diamètre: voir manuel 197.B700.00
Change size diameter: see manual 197.B700.00 / Wechsel Durchmesser: siehe Gebrauchsanweisung 197.B700.00

X DICHTINGSMIDDEL
MATIERE D'ETANCHEITE
SEALING AGENT
ABDICHTUNG

LIJMINJECTIE NA VERBINDING
INJECTION DE COLLE APRÈS LA CONNEXION
GLUE INJECTION AFTER CONNECTION
KLEBEINJEKTION NACH DEM ANSCHLUSS

CORNER SCREW MC

GLUE INJECTION + CORNER CONNECTION 197.D800.00

MASTERLINE 8-Fu

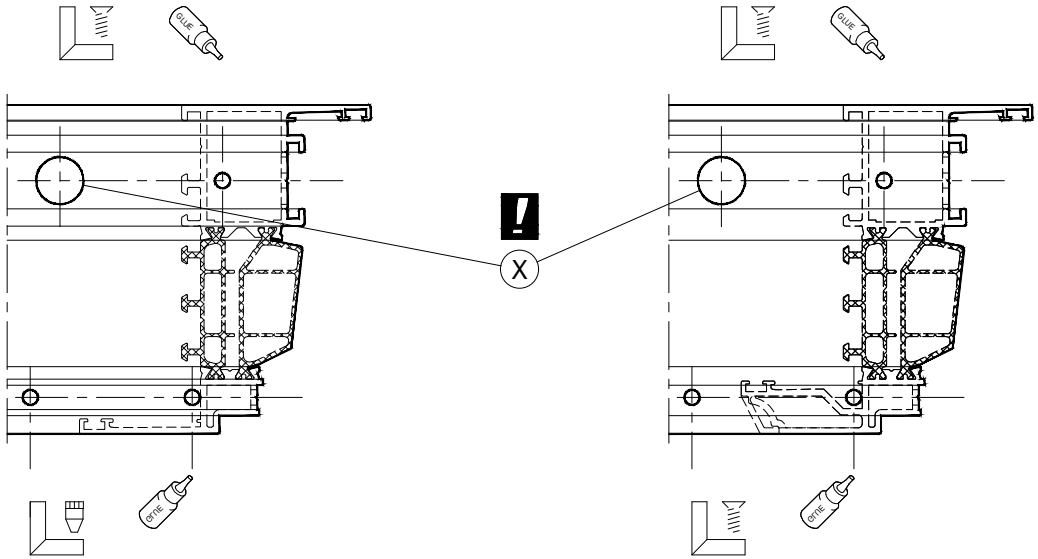

Aanpassing diameter: zie handleiding 197.B600.00
Modification diamètre: voir manuel 197.B600.00
Change size diameter: see manual 197.B600.00
Wechsel Durchmesser: siehe Gebrauchsanweisung 197.B600.00

MONTAGEVOLGORDE L 'ORDRE DE MONTAGE THE ORDER OF ASSEMBLY MONTAGEREIHENFOLGE	1 2 3 .

CORNER SCREW MC

GLUE INJECTION + CORNER CONNECTION 197.D800.00

MASTERLINE 8-Fu

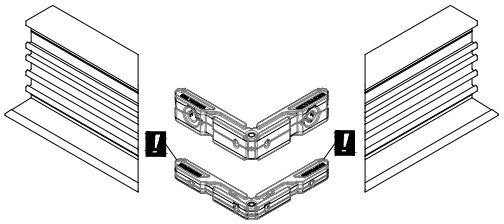

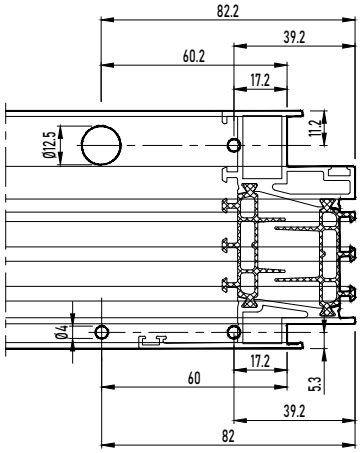

!	UITZONDERING: TEXT HOEKVERBINDER NAAR BINNEN GERICHT EXCEPTION: TEXTE SUR L'ÉQUERRE VERS L'INTERIEUR EXCEPTION: TEXT CORNER CLEAT FACING INWARD AUSNAHME: TEXT ECKVERBINDER NACH INNEN GERICHTET

CORNER SCREW MC

GLUE INJECTION + CORNER CONNECTION 197.D800.00

MASTERLINE 8-Fu

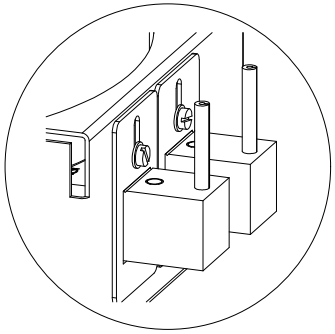

ALGEMEEN PRINCIPE
GENERAL PRINCIPE
GENERAL PRINCIPLE
GENERAL PRINCIPLE
ALLGEMEIN PRINZIP
GENERAL PRONCIPIO



A

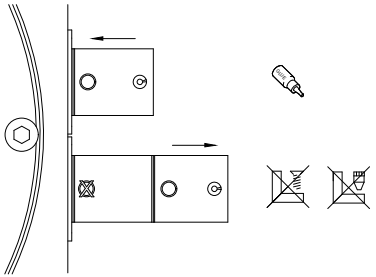

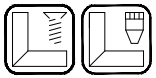

B

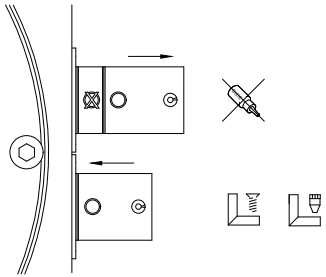



A + B

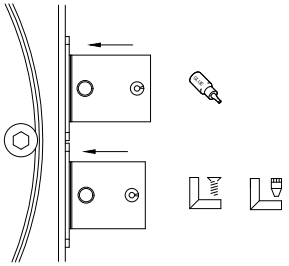

CORNER SCREW MC

GLUE INJECTION + CORNER CONNECTION 197.D800.00

MASTERLINE 8-Fu

A

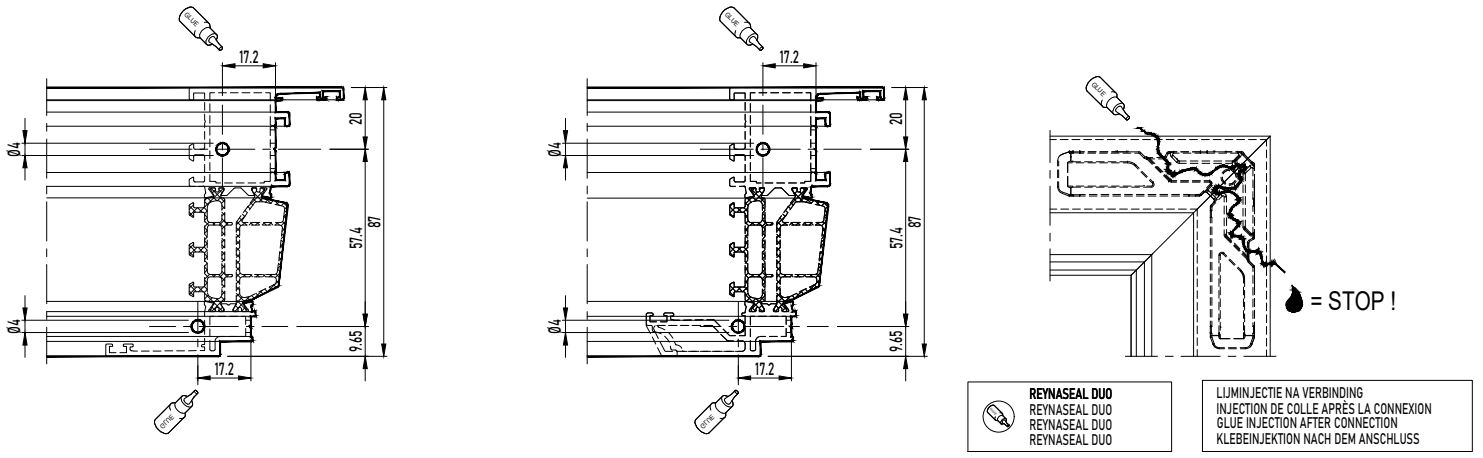

REYNASEAL DUO
REYNASEAL DUO
REYNASEAL DUO
REYNASEAL DUO
REYNASEAL DUO

LIJMINJECTIE NA VERBINDING
INJECTION DE COLLE APRÈS LA CONNEXION
GLUE INJECTION AFTER CONNECTION
KLEBEINJEKTION NACH DEM ANSCHLUSS

B

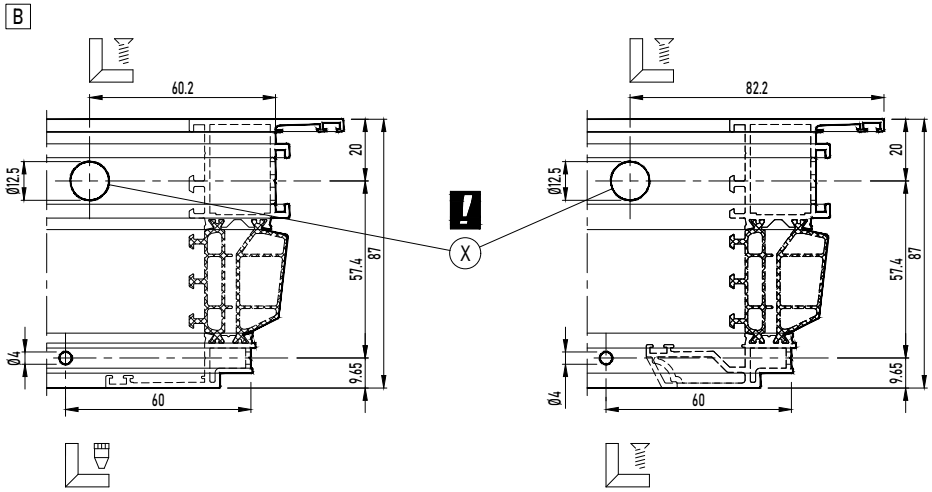

Aanpassing diameter: zie handleiding 197.B700.00 / Modification diamètre: voir manuel 197.B700.00
Change size diameter: see manual 197.B700.00 / Wechsel Durchmesser: siehe Gebrauchsanweisung 197.B700.00

X DICHTINGSMIDDEL
MATIERE D'ETANCHEITE
SEALING AGENT
ABDICHTUNG
SELLANTE
MASA USZCZELNIAJACA

LIJMINJECTIE NA VERBINDING
INJECTION DE COLLE APRÈS LA CONNEXION
GLUE INJECTION AFTER CONNECTION
KLEBEINJEKTION NACH DEM ANSCHLUSS

CORNER SCREW MC

GLUE INJECTION + CORNER CONNECTION 197.D800.00

MASTERLINE 8-Fu

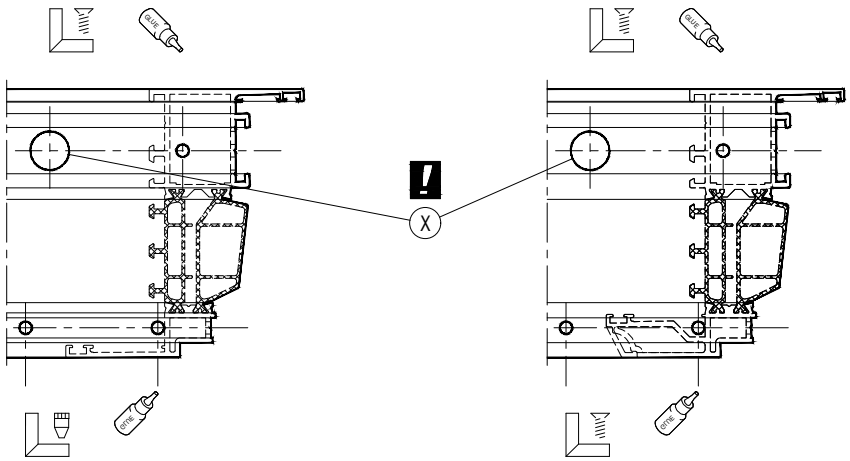

Aanpassing diameter: zie handleiding 197.B600.00
Modification diamètre: voir manuel 197.B600.00
Change size diameter: see manual 197.B600.00
Wechsel Durchmesser: siehe Gebrauchsanweisung 197.B600.00

MONTAGEVOLGORDE
L 'ORDRE DE MONTAGE
THE ORDER OF ASSEMBLY
MONTAGEREIHENFOLGE
ORDEN DE MONTAJE
KOLEJNOSC MONTAZU

1 2 3 .

X DICHTINGSMIDDEL
MATIERE D'ETANCHEITE
SEALING AGENT
ABDICHTUNG
SELLANTE
MASA USZCZELNIAJACA

LIJMINJECTIE NA VERBINDING
INJECTION DE COLLE APRÈS LA CONNEXION
GLUE INJECTION AFTER CONNECTION
KLEBEINJEKTION NACH DEM ANSCHLUSS

CORNER SCREW MC

GLUE INJECTION + CORNER CONNECTION 197.D800.00

MASTERLINE 8-Fu

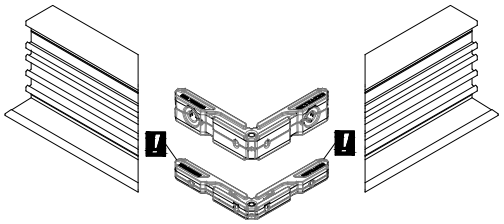

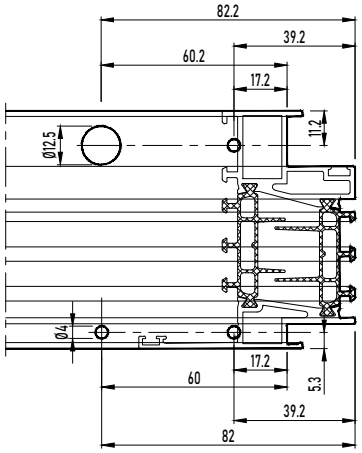

!	UITZONDERING: TEXT HOEKVERBINDER NAAR BINNEN GERICHT EXCEPTION: TEXTE SUR L'ÉQUERRE VERS L'INTERIEUR EXCEPTION: TEXT CORNER CLEAT FACING INWARD AUSNAHME: TEXT ECKVERBINDER NACH INNEN GERICHTET

CORNER SCREW MC

GLUE INJECTION + CORNER CONNECTION 197.D800.00

MASTERLINE 8-Fu

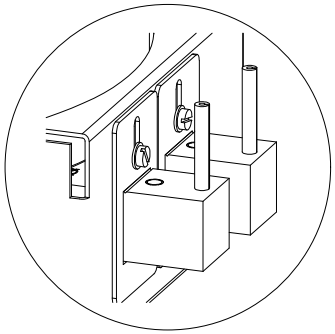

ALGEMEEN PRINCIPE
GENERAL PRINCIPE
GENERAL PRINCIPLE
ALLGEMEIN PRINZIP
GENERAL PRONCIPIO



A

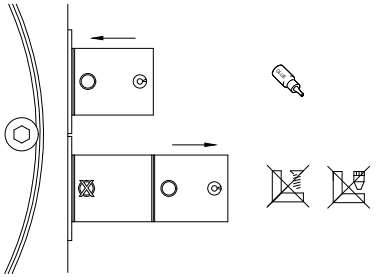

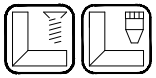

B

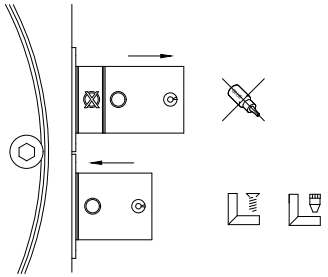



A + B

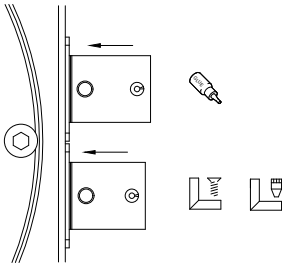

CORNER SCREW MC

GLUE INJECTION + CORNER CONNECTION 197.D800.00

MASTERLINE 8-Fu

A

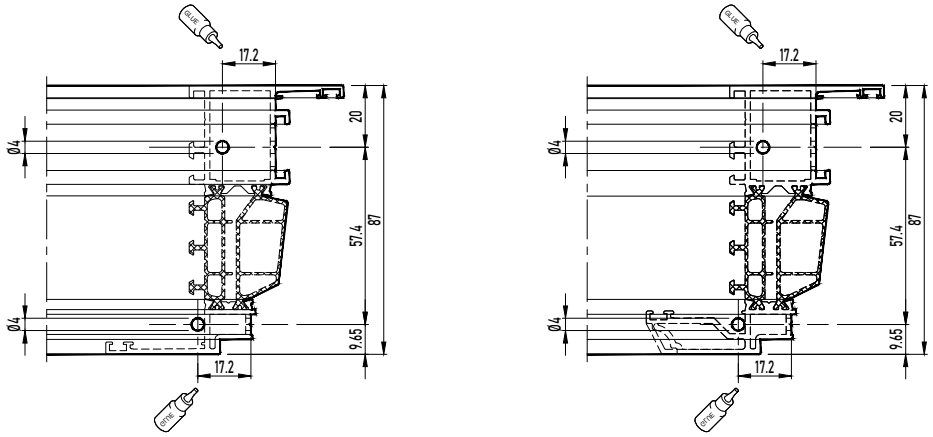

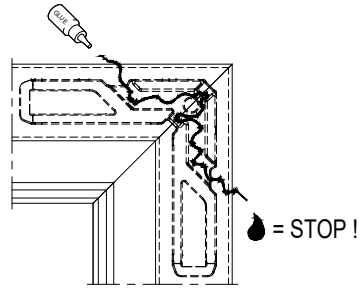

REYNASEAL DUO
REYNASEAL DUO
REYNASEAL DUO
REYNASEAL DUO
REYNASEAL DUO

LIJMINJECTIE NA VERBINDING
INJECTION DE COLLE APRÈS LA CONNEXION
GLUE INJECTION AFTER CONNECTION
KLEBEINJEKTION NACH DEM ANSCHLUSS

B

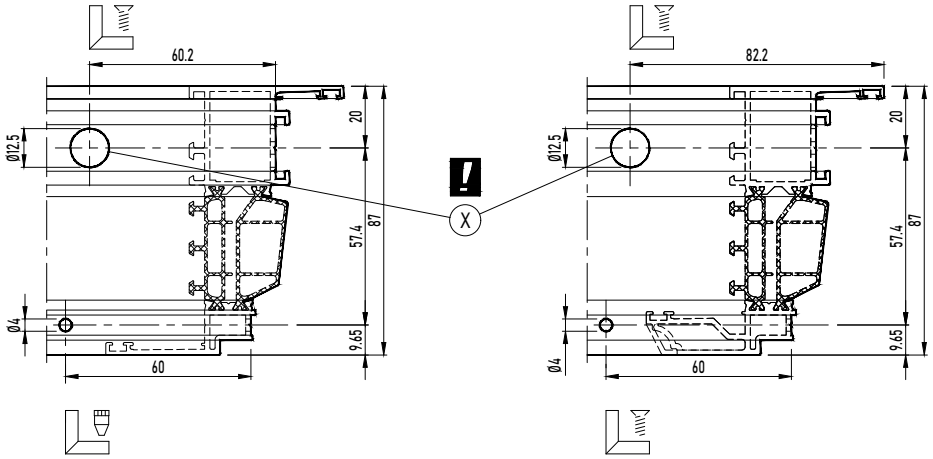

DICHTINGSMIDDEL
MATIERE D'ETANCHEITE
SEALING AGENT
ABDICHTUNG
SELLANTE
MASA USZCZELNIAJACA

LIJMINJECTIE NA VERBINDING
INJECTION DE COLLE APRÈS LA CONNEXION
GLUE INJECTION AFTER CONNECTION
KLEBEINJEKTION NACH DEM ANSCHLUSS

Aanpassing diameter: zie handleiding 197.B700.00 / Modification diamètre: voir manuel 197.B700.00
Change size diameter: see manual 197.B700.00 / Wechsel Durchmesser: siehe Gebrauchsanweisung 197.B700.00

CORNER SCREW MC

GLUE INJECTION + CORNER CONNECTION 197.D800.00

MASTERLINE 8-Fu

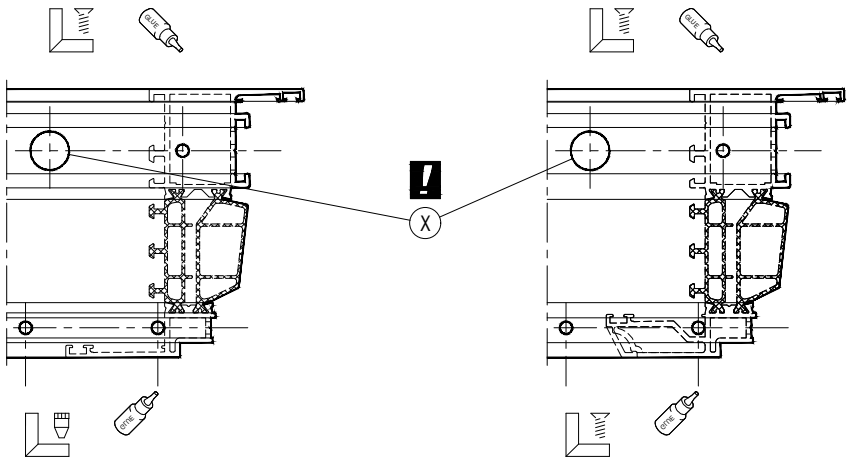

Aanpassing diameter: zie handleiding 197.B600.00
Modification diamètre: voir manuel 197.B600.00
Change size diameter: see manual 197.B600.00
Wechsel Durchmesser: siehe Gebrauchsanweisung 197.B600.00

MONTAGEVOLGORDE L'ORDRE DE MONTAGE THE ORDER OF ASSEMBLY MONTAGEREIHENFOLGE ORDEN DE MONTAJE KOLEJNOSC MONTAZU	1 2 3 .

X	DICHTINGSMIDDEL MATIERE D'ETANCHEITE SEALING AGENT ABDICHTUNG SELLANTE MASA USZCZELNIAJACA

LIJMINJECTIE NA VERBINDING
INJECTION DE COLLE APRÈS LA CONNEXION
GLUE INJECTION AFTER CONNECTION
KLEBEINJEKTION NACH DEM ANSCHLUSS

CORNER SCREW MC

GLUE INJECTION + CORNER CONNECTION 197.D800.00

MASTERLINE 8-Fu

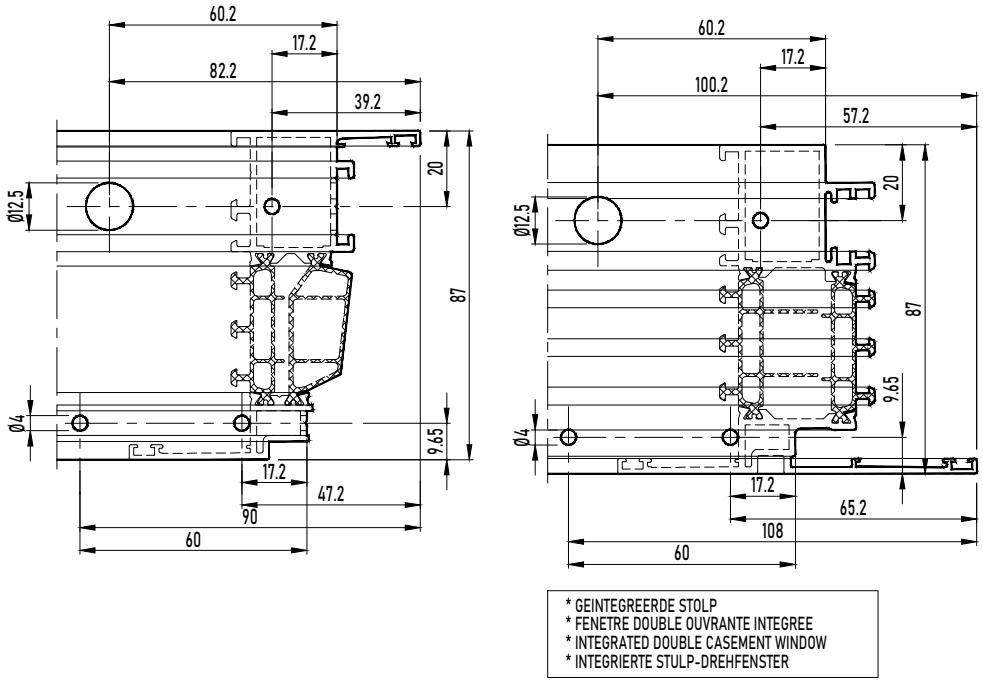

* GEINTEGREERDE STOLP
* FENETRE DOUBLE OUVRANTE INTEGREE
* INTEGRATED DOUBLE CASEMENT WINDOW
* INTEGRIERTE STULP-DREHFENSTER

CORNER SCREW MC

GLUE INJECTION + CORNER CONNECTION 197.D800.00

MASTERLINE 8-Fu

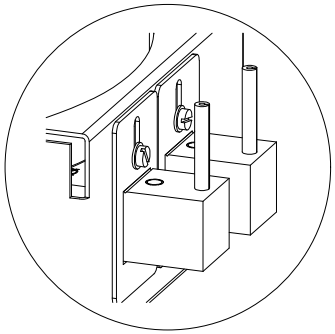

ALGEMEEN PRINCIPE
GENERAL PRINCIPE
GENERAL PRINCIPLE
ALLGEMEIN PRINZIP
GENERAL PRONCIPIO



A

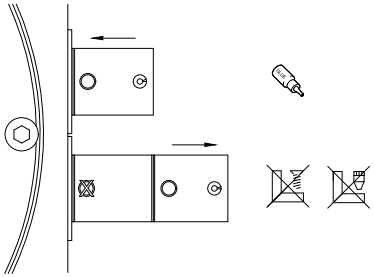

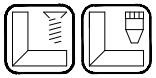

B

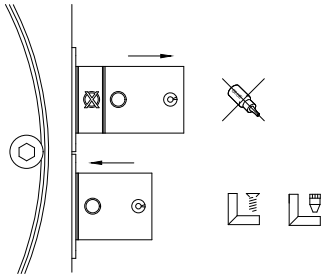



A + B

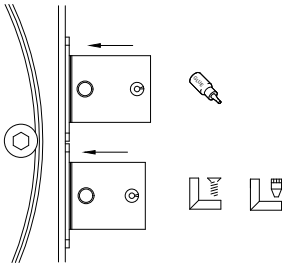

CORNER SCREW MC

GLUE INJECTION + CORNER CONNECTION 197.D800.00

MASTERLINE 8-Fu

A

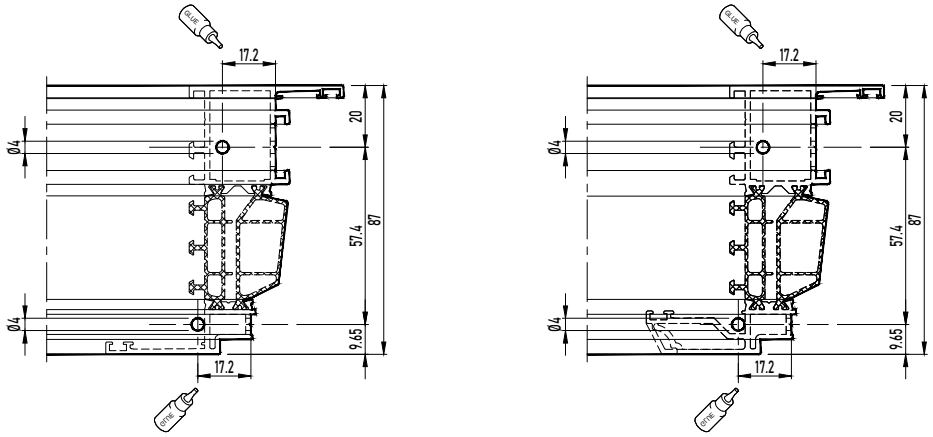

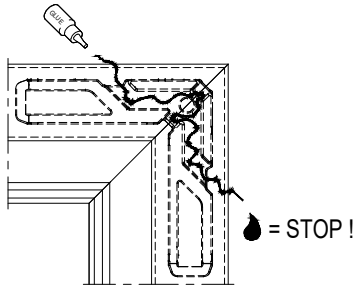



REYNASEAL DUO
REYNASEAL DUO
REYNASEAL DUO
REYNASEAL DUO

LIJMINJECTIE NA VERBINDING
INJECTION DE COLLE APRÈS LA CONNEXION
GLUE INJECTION AFTER CONNECTION
KLEBEINJEKTION NACH DEM ANSCHLUSS

B

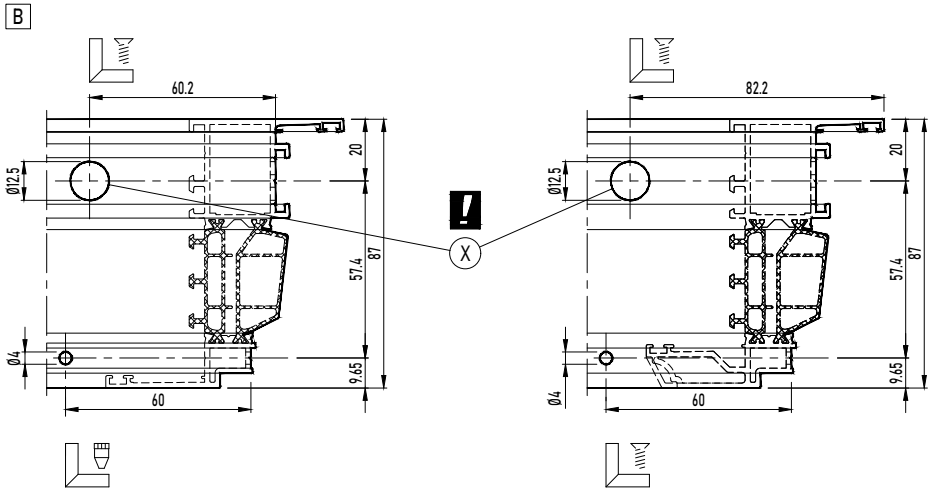

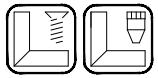

DICHTINGSMIDDEL
MATIERE D'ETANCHEITE
SEALING AGENT
ABDICHTUNG
SELLANTE
MASA USZCZELNIAJACA

LIJMINJECTIE NA VERBINDING
INJECTION DE COLLE APRÈS LA CONNEXION
GLUE INJECTION AFTER CONNECTION
KLEBEINJEKTION NACH DEM ANSCHLUSS



Aanpassing diameter: zie handleiding 197.B700.00 / Modification diamètre: voir manuel 197.B700.00
Change size diameter: see manual 197.B700.00 / Wechsel Durchmesser: siehe Gebrauchsanweisung 197.B700.00

CORNER SCREW MC

GLUE INJECTION + CORNER CONNECTION 197.D800.00

MASTERLINE 8-Fu

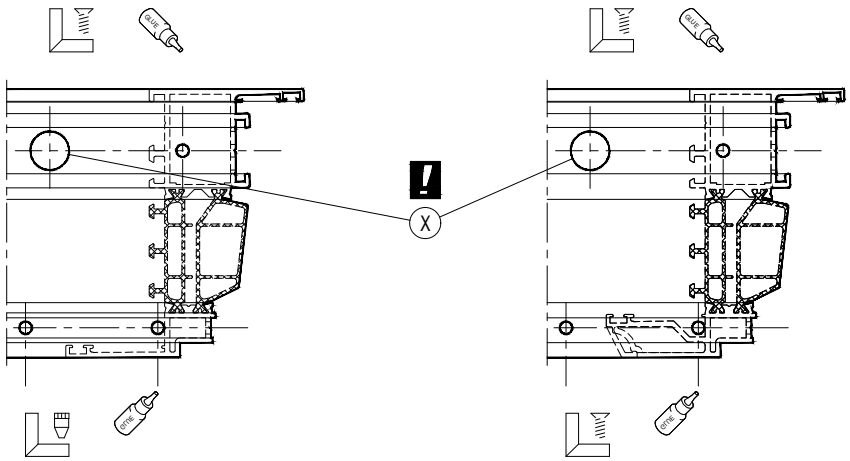

Aanpassing diameter: zie handleiding 197.B600.00
Modification diamètre: voir manuel 197.B600.00
Change size diameter: see manual 197.B600.00
Wechsel Durchmesser: siehe Gebrauchsanweisung 197.B600.00

MONTAGEVOLGORDE L'ORDRE DE MONTAGE THE ORDER OF ASSEMBLY MONTAGEREIHENFOLGE ORDEN DE MONTAJE KOLEJNOSC MONTAZU	1 2 3 .

X	DICHTINGSMIDDEL MATIERE D'ETANCHEITE SEALING AGENT ABDICHTUNG SELLANTE MASA USZCZELNIAJACA

LIJMINJECTIE NA VERBINDING
INJECTION DE COLLE APRÈS LA CONNEXION
GLUE INJECTION AFTER CONNECTION
KLEBEINJEKTION NACH DEM ANSCHLUSS

CORNER SCREW MC

GLUE INJECTION + CORNER CONNECTION 197.D800.00

MASTERLINE 8-Fu

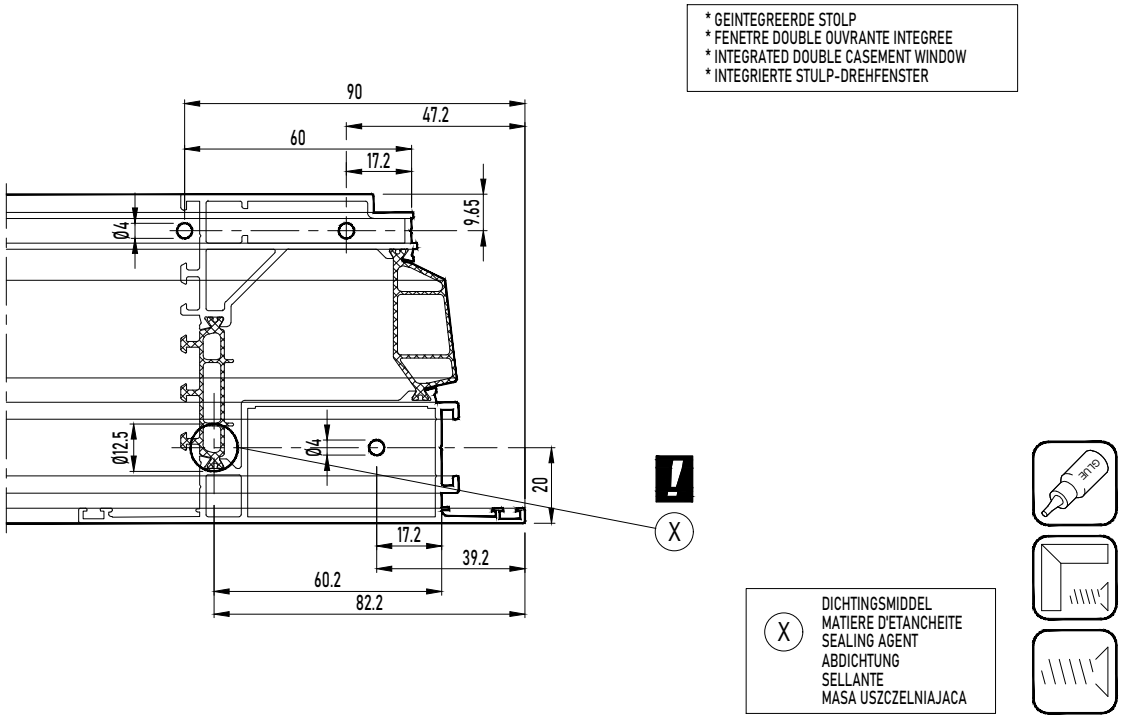

CORNER SCREW MC

GLUE INJECTION + CORNER CONNECTION 197.D800.00

MASTERLINE 8-Fu

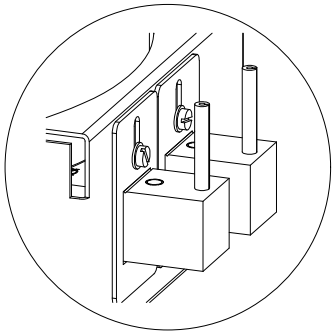

ALGEMEEN PRINCIPE
GENERAL PRINCIPE
GENERAL PRINCIPLE
ALLGEMEIN PRINZIP
GENERAL PRONCIPIO

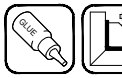

A

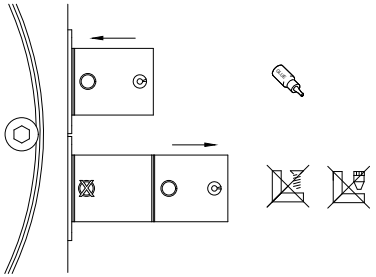

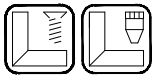

B

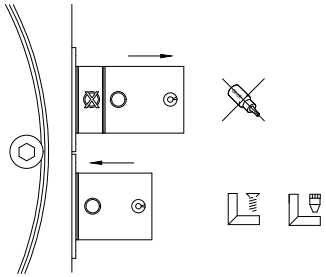



A + B

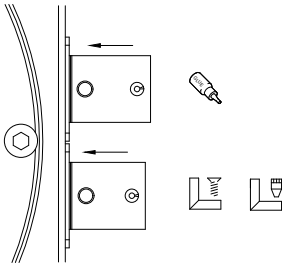

CORNER SCREW MC

GLUE INJECTION + CORNER CONNECTION 197.D800.00

MASTERLINE 8-Fu

A

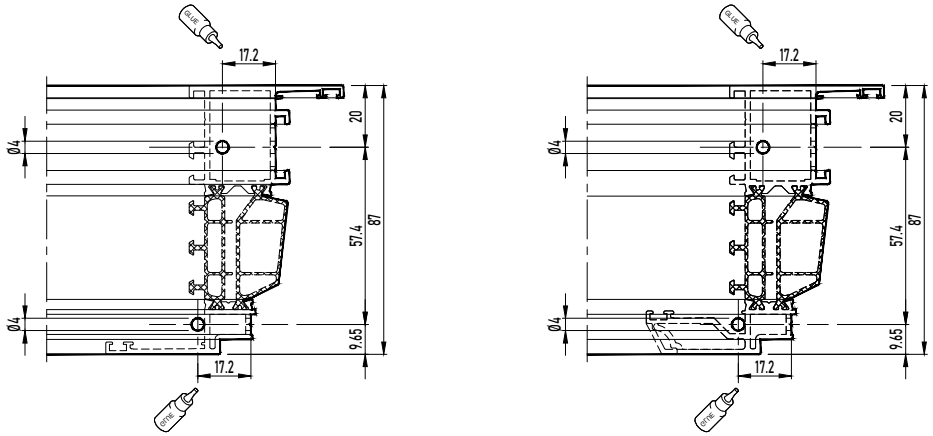

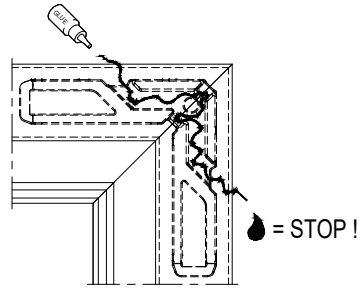

REYNASEAL DUO
REYNASEAL DUO
REYNASEAL DUO
REYNASEAL DUO
REYNASEAL DUO

LIJMINJECTIE NA VERBINDING
INJECTION DE COLLE APRÈS LA CONNEXION
GLUE INJECTION AFTER CONNECTION
KLEBEINJEKTION NACH DEM ANSCHLUSS

B

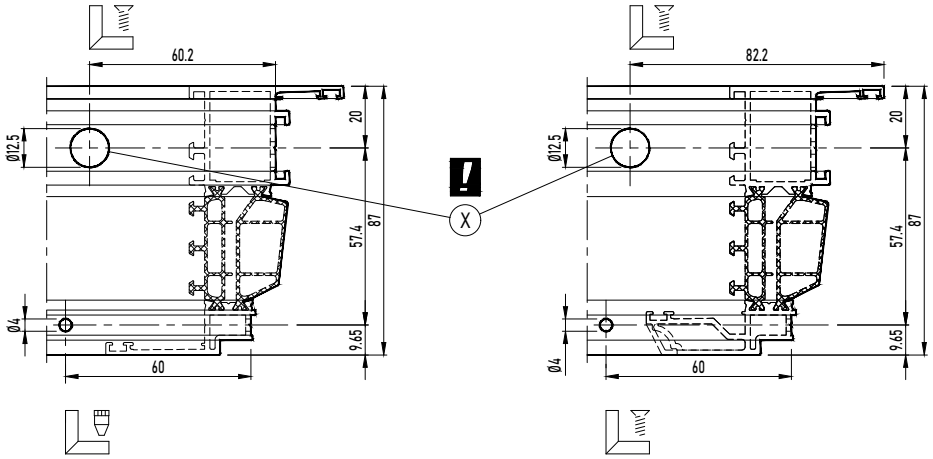

DICHTINGSMIDDEL
MATIERE D'ETANCHEITE
SEALING AGENT
ABDICHTUNG
SELLANTE
MASA USZCZELNIAJACA

LIJMINJECTIE NA VERBINDING
INJECTION DE COLLE APRÈS LA CONNEXION
GLUE INJECTION AFTER CONNECTION
KLEBEINJEKTION NACH DEM ANSCHLUSS

Aanpassing diameter: zie handleiding 197.B700.00 / Modification diamètre: voir manuel 197.B700.00
Change size diameter: see manual 197.B700.00 / Wechsel Durchmesser: siehe Gebrauchsanweisung 197.B700.00

CORNER SCREW MC

GLUE INJECTION + CORNER CONNECTION 197.D800.00

MASTERLINE 8-Fu

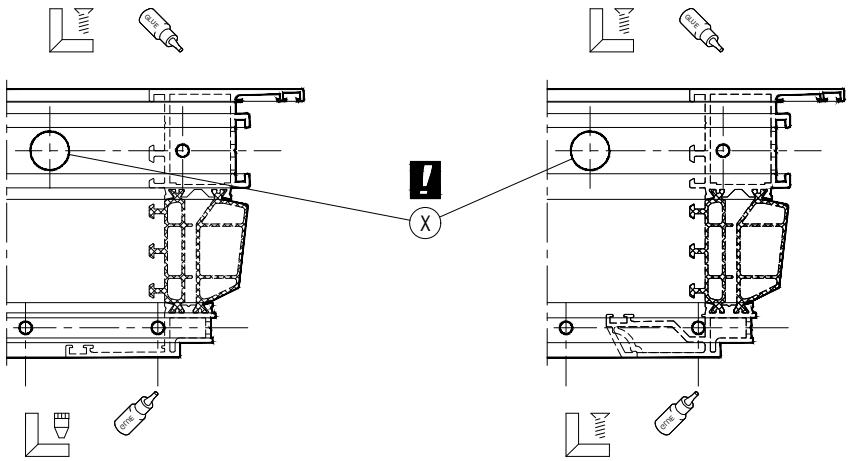

Aanpassing diameter: zie handleiding 197.B600.00
Modification diamètre: voir manuel 197.B600.00
Change size diameter: see manual 197.B600.00
Wechsel Durchmesser: siehe Gebrauchsanweisung 197.B600.00

MONTAGEVOLGORDE L'ORDRE DE MONTAGE THE ORDER OF ASSEMBLY MONTAGEREIHENFOLGE ORDEN DE MONTAJE KOLEJNOSC MONTAZU	1 2 3 .

X	DICHTINGSMIDDEL MATIERE D'ETANCHEITE SEALING AGENT ABDICHTUNG SELLANTE MASA USZCZELNIAJACA

LIJMINJECTIE NA VERBINDING
INJECTION DE COLLE APRÈS LA CONNEXION
GLUE INJECTION AFTER CONNECTION
KLEBEINJEKTION NACH DEM ANSCHLUSS

CORNER SCREW MC

GLUE INJECTION + CORNER CONNECTION 197.F900.00

MASTERLINE 8-Fu

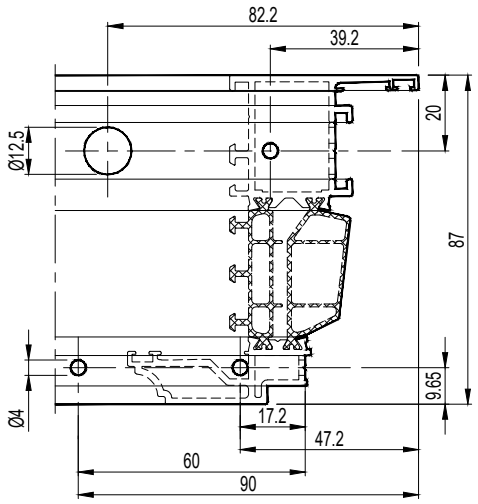

X	DICHTINGSMIDDEL MATIERE D'ETANCHEITE SEALING AGENT ABDICHTUNG

CORNER SCREW MC

GLUE INJECTION + CORNER CONNECTION 197.F900.00

MASTERLINE 8-Fu

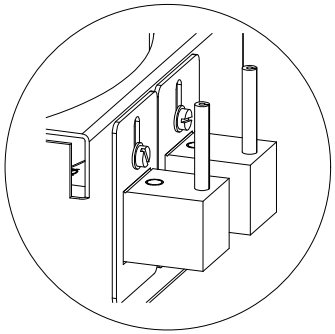

ALGEMEEN PRINCIPE
GENERAL PRINCIPE
GENERAL PRINCIPLE
ALLGEMEIN PRINZIP



A

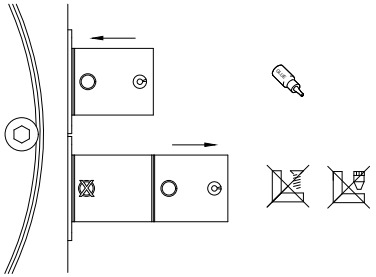

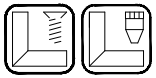

B

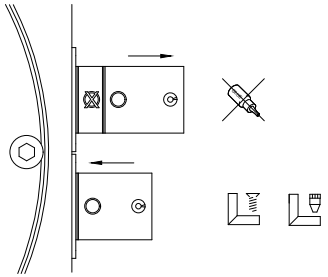



A + B

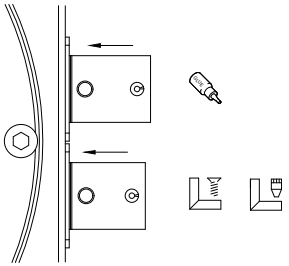

CORNER SCREW MC

GLUE INJECTION + CORNER CONNECTION 197.F900.00

MASTERLINE 8-Fu

A

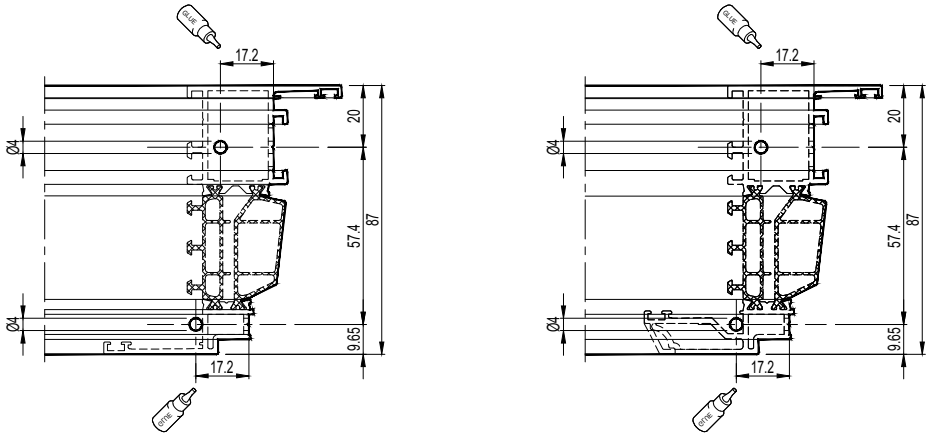

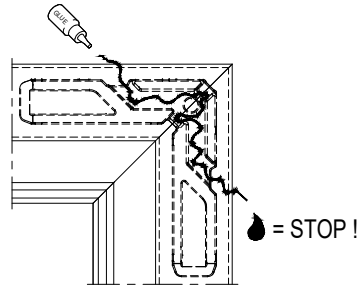



REYNASEAL DUO
REYNASEAL DUO
REYNASEAL DUO
REYNASEAL DUO

LIJMINJECTIE NA VERBINDING
INJECTION DE COLLE APRÈS LA CONNEXION
GLUE INJECTION AFTER CONNECTION
KLEBEINJEKTION NACH DEM ANSCHLUSS

B

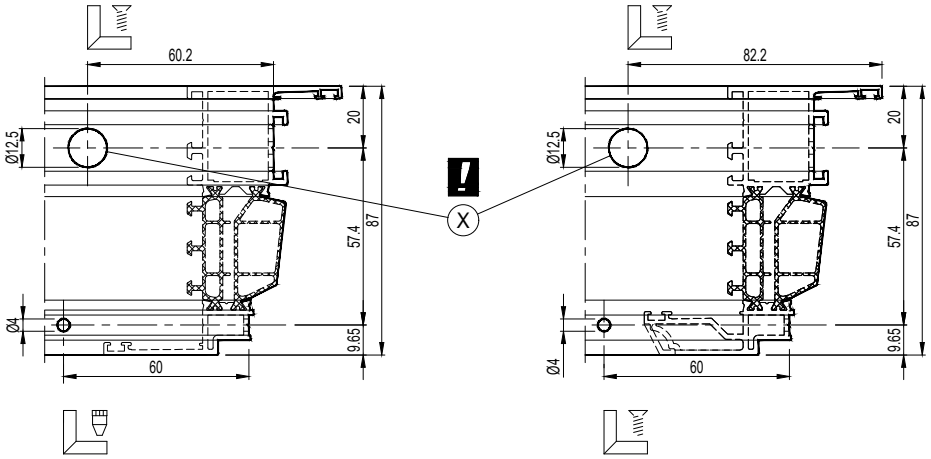

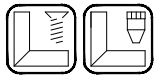

Aanpassing diameter: zie handleiding 197.B700.00 / Modification diamètre: voir manuel 197.B700.00
Change size diameter: see manual 197.B700.00 / Wechsel Durchmesser: siehe Gebrauchsanweisung 197.B700.00

X DICHTINGSMIDDEL
MATIERE D'ETANCHEITE
SEALING AGENT
ABDICHTUNG

LIJMINJECTIE NA VERBINDING
INJECTION DE COLLE APRÈS LA CONNEXION
GLUE INJECTION AFTER CONNECTION
KLEBEINJEKTION NACH DEM ANSCHLUSS



CORNER SCREW MC

GLUE INJECTION + CORNER CONNECTION 197.F900.00

MASTERLINE 8-Fu

A + B

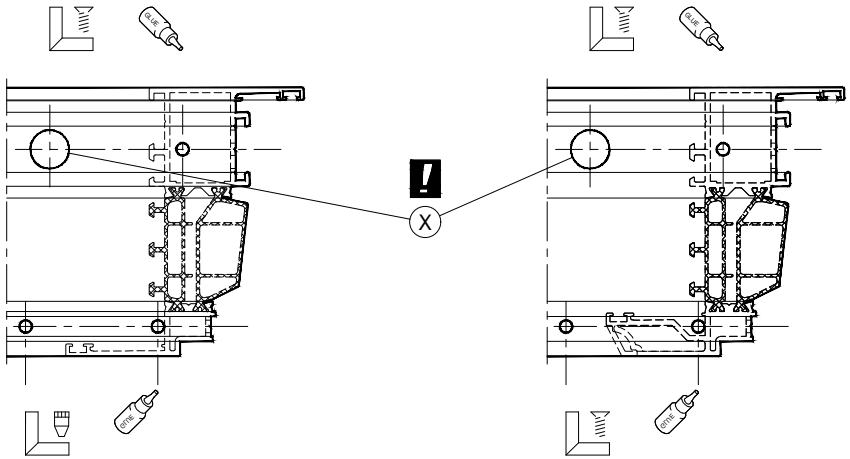



Aanpassing diameter: zie handleiding 197.B600.00
Modification diamètre: voir manuel 197.B600.00
Change size diameter: see manual 197.B600.00
Wechsel Durchmesser: siehe Gebrauchsanweisung 197.B600.00

MONTAGEVOLGORDE L 'ORDRE DE MONTAGE THE ORDER OF ASSEMBLY MONTAGEREIHENFOLGE	1 2 3 .

X	DICHTINGSMIDDEL MATIERE D'ETANCHEITE SEALING AGENT ABDICHTUNG

LIJMINJECTIE NA VERBINDING
INJECTION DE COLLE APRÈS LA CONNEXION
GLUE INJECTION AFTER CONNECTION
KLEBEINJEKTION NACH DEM ANSCHLUSS



CORNER SCREW MC

GLUE INJECTION + CORNER CONNECTION 197.F900.00

MASTERLINE 8-Fu

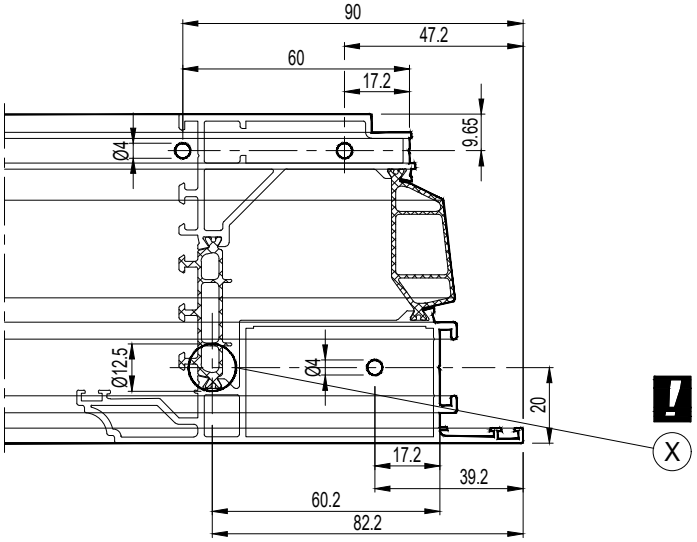

CORNER SCREW MC

GLUE INJECTION + CORNER CONNECTION 197.F900.00

MASTERLINE 8-Fu

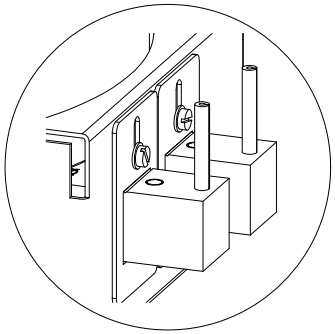

ALGEMEEN PRINCIPE
GENERAL PRINCIPE
GENERAL PRINCIPLE
ALLGEMEIN PRINZIP



A

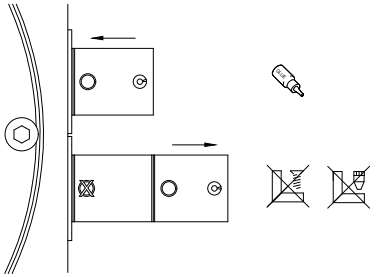

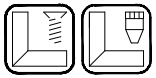

B

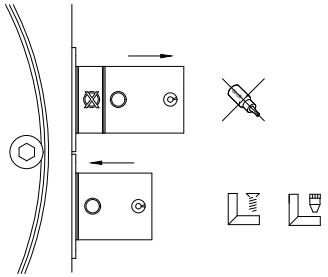



A + B

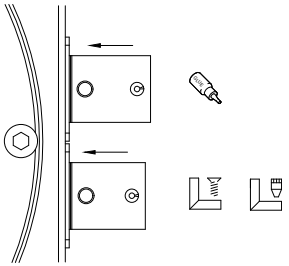

CORNER SCREW MC

GLUE INJECTION + CORNER CONNECTION 197.F900.00

MASTERLINE 8-Fu

A

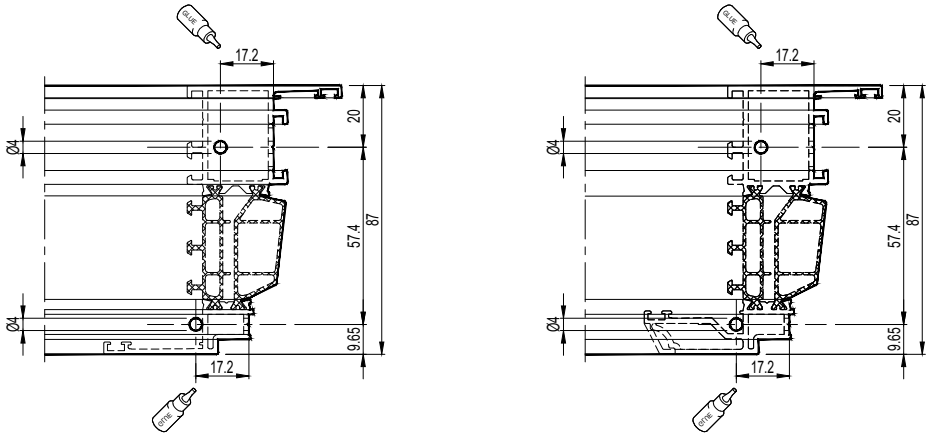

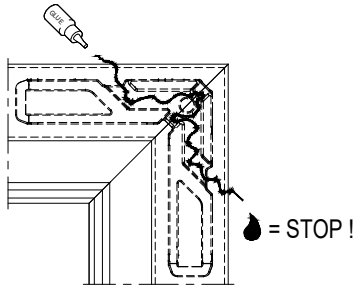

REYNASEAL DUO
REYNASEAL DUO
REYNASEAL DUO
REYNASEAL DUO

LIJMINJECTIE NA VERBINDING
INJECTION DE COLLE APRÈS LA CONNEXION
GLUE INJECTION AFTER CONNECTION
KLEBEINJEKTION NACH DEM ANSCHLUSS

B

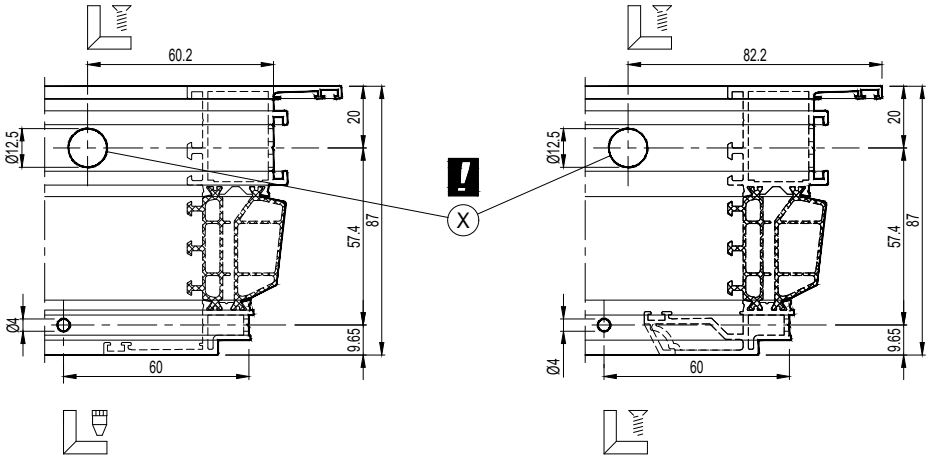

X DICHTINGSMIDDEL
MATIERE D'ETANCHEITE
SEALING AGENT
ABDICHTUNG

LIJMINJECTIE NA VERBINDING
INJECTION DE COLLE APRÈS LA CONNEXION
GLUE INJECTION AFTER CONNECTION
KLEBEINJEKTION NACH DEM ANSCHLUSS

Aanpassing diameter: zie handleiding 197.B700.00 / Modification diamètre: voir manuel 197.B700.00
Change size diameter: see manual 197.B700.00 / Wechsel Durchmesser: siehe Gebrauchsanweisung 197.B700.00

CORNER SCREW MC

GLUE INJECTION + CORNER CONNECTION 197.F900.00

MASTERLINE 8-Fu

A + B

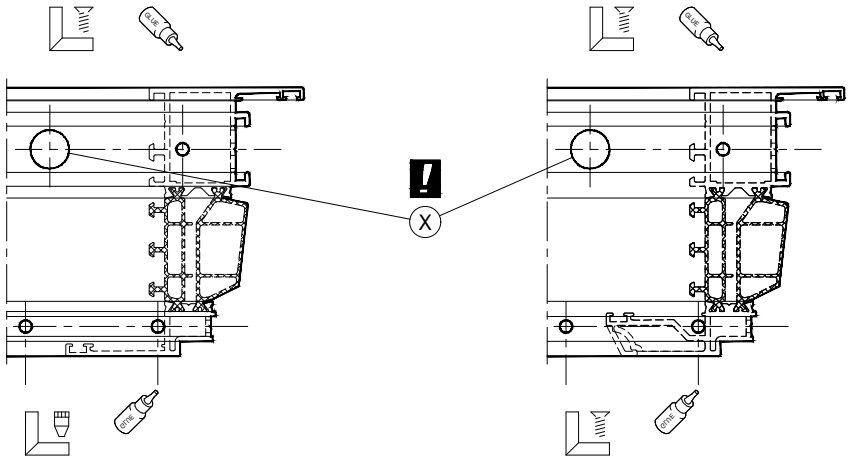



Aanpassing diameter: zie handleiding 197.B600.00
Modification diamètre: voir manuel 197.B600.00
Change size diameter: see manual 197.B600.00
Wechsel Durchmesser: siehe Gebrauchsanweisung 197.B600.00

MONTAGEVOLGORDE L 'ORDRE DE MONTAGE THE ORDER OF ASSEMBLY MONTAGEREIHENFOLGE	1 2 3 .

X	DICHTINGSMIDDEL MATIERE D'ETANCHEITE SEALING AGENT ABDICHTUNG

LIJMINJECTIE NA VERBINDING
INJECTION DE COLLE APRÈS LA CONNEXION
GLUE INJECTION AFTER CONNECTION
KLEBEINJEKTION NACH DEM ANSCHLUSS



CORNER SCREW MC

GLUE INJECTION + CORNER CONNECTION 197.D800.00

MASTERLINE 8-Fu

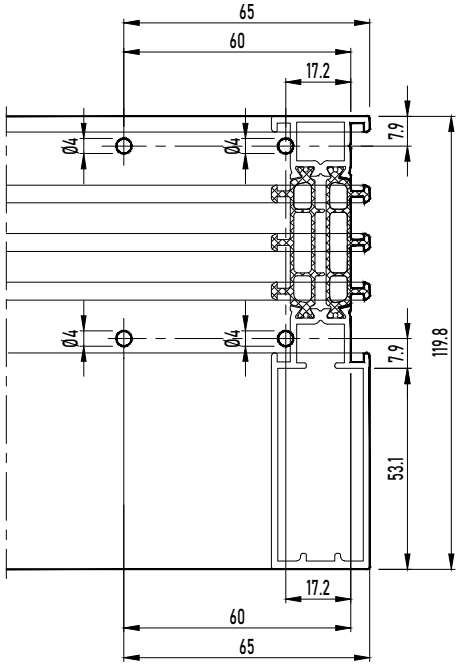

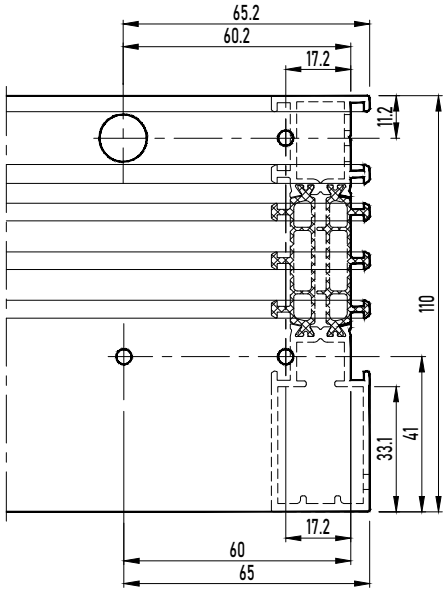

X DICHTINGSMIDDEL
MATIERE D'ETANCHEITE
SEALING AGENT
ABDICHTUNG

CORNER SCREW MC

GLUE INJECTION + CORNER CONNECTION 197.D800.00

MASTERLINE 8-Fu

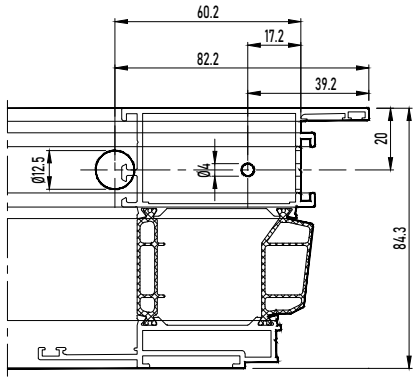

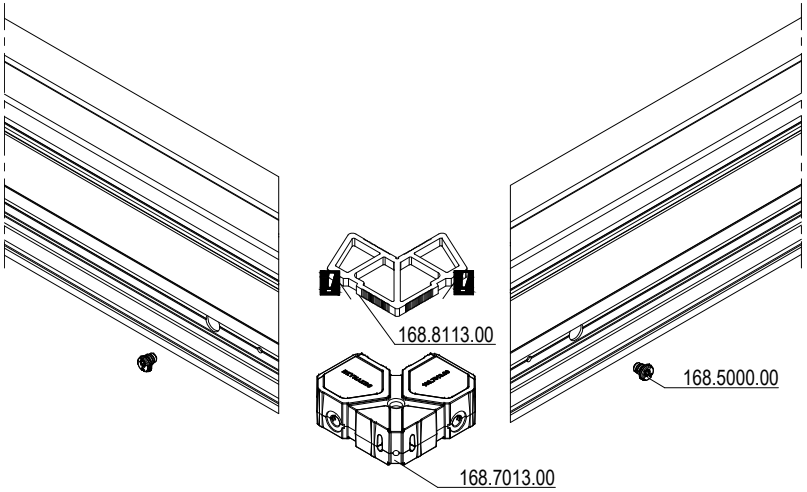



LIJMINJECTIE NA VERBINDING
INJECTION DE COLLE APRÈS LA CONNEXION
GLUE INJECTION AFTER CONNECTION
KLEBEINJEKTION NACH DEM ANSCHLUSS

UITZONDERING: VERLIJMEN IN DE PROFIELKAMER
EXCEPTION: ENCOLLAGE DANS LA CHAMBRE DU PROFILE
EXCEPTION: GLUEING IN THE PROFILE CHAMBER
AUSNAHME: KLEBEREINSATZ IN DIE ECKWINKELKAMmER

DICHTINGSMIDDEL
MATIERE D'ETANCHEITE
SEALING AGENT
ABDICHTUNG

CORNER SCREW MC

GLUE INJECTION + CORNER CONNECTION 197.D800.00

MASTERLINE 8-Fu

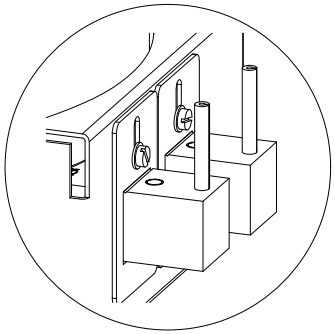

ALGEMEEN PRINCIPE
GENERAL PRINCIPE
GENERAL PRINCIPLE
ALLGEMEIN PRINZIP



A

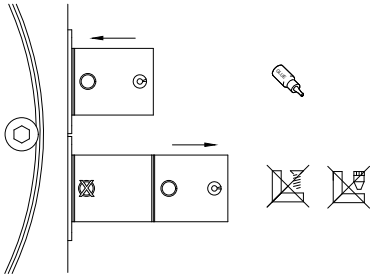

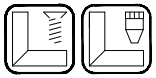

B

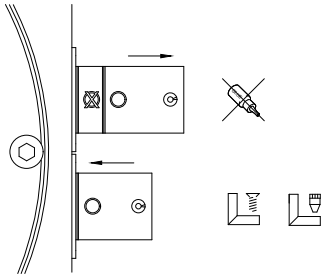



A + B

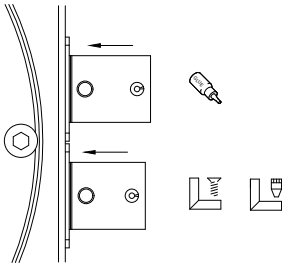

CORNER SCREW MC

GLUE INJECTION + CORNER CONNECTION 197.D800.00

MASTERLINE 8-Fu

A

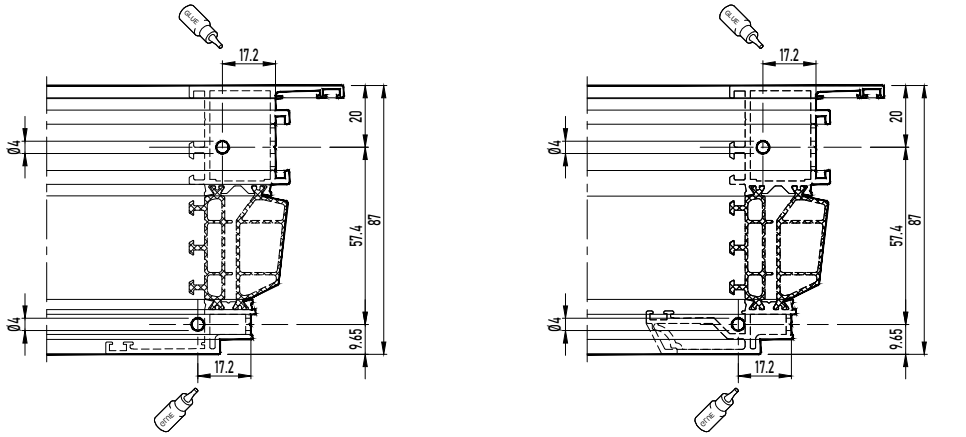

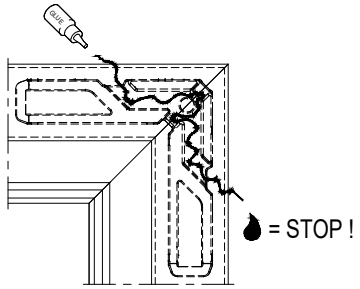

REYNASEAL DUO
REYNASEAL DUO
REYNASEAL DUO
REYNASEAL DUO

LIJMINJECTIE NA VERBINDING
INJECTION DE COLLE APRÈS LA CONNEXION
GLUE INJECTION AFTER CONNECTION
KLEBEINJEKTION NACH DEM ANSCHLUSS

B

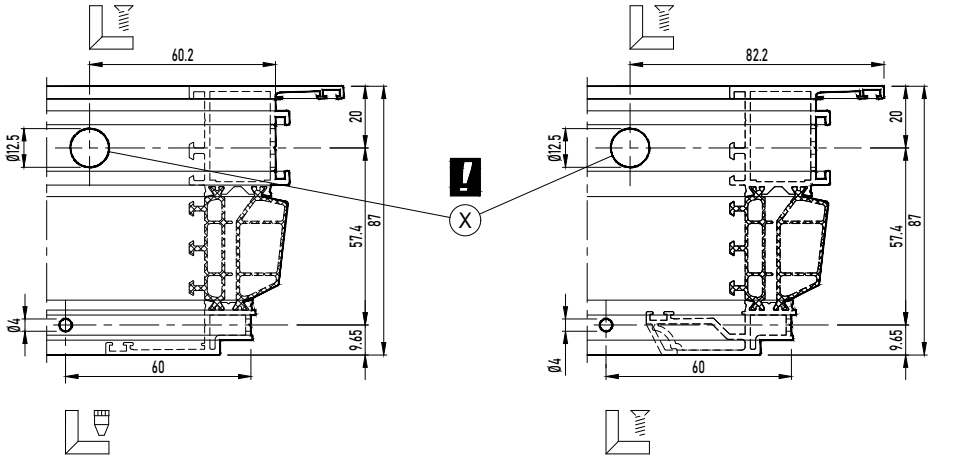

Aanpassing diameter: zie handleiding 197.B700.00 / Modification diamètre: voir manuel 197.B700.00
Change size diameter: see manual 197.B700.00 / Wechsel Durchmesser: siehe Gebrauchsanweisung 197.B700.00

X
DICHTINGSMIDDEL
MATIERE D'ETANCHEITE
SEALING AGENT
ABDICHTUNG

LIJMINJECTIE NA VERBINDING
INJECTION DE COLLE APRÈS LA CONNEXION
GLUE INJECTION AFTER CONNECTION
KLEBEINJEKTION NACH DEM ANSCHLUSS

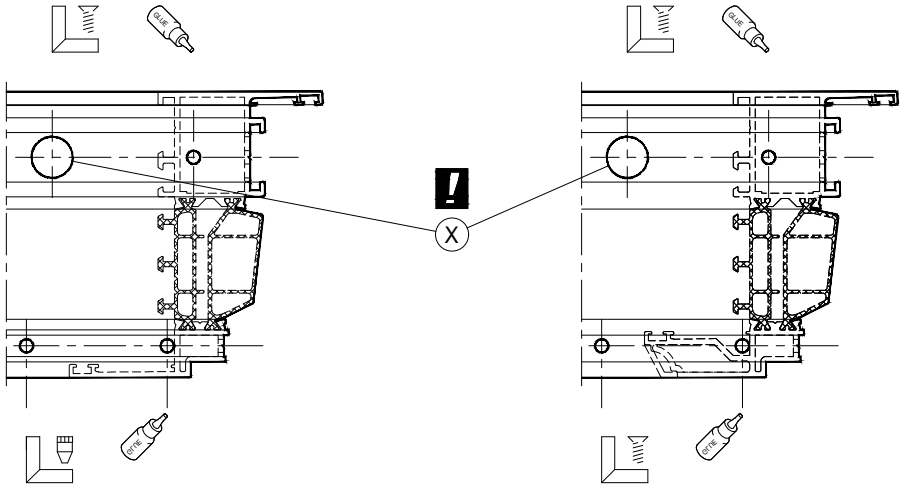

Aanpassing diameter: zie handleiding 197.B600.00
Modification diamètre: voir manuel 197.B600.00
Change size diameter: see manual 197.B600.00
Wechsel Durchmesser: siehe Gebrauchsanweisung 197.B600.00

MONTAGEVOLGORDE L'ORDRE DE MONTAGE THE ORDER OF ASSEMBLY MONTAGEREIHENFOLGE	1 2 3 .

CORNER SCREW MC

GLUE INJECTION + CORNER CONNECTION 197.D800.00

MASTERLINE 8-Fu

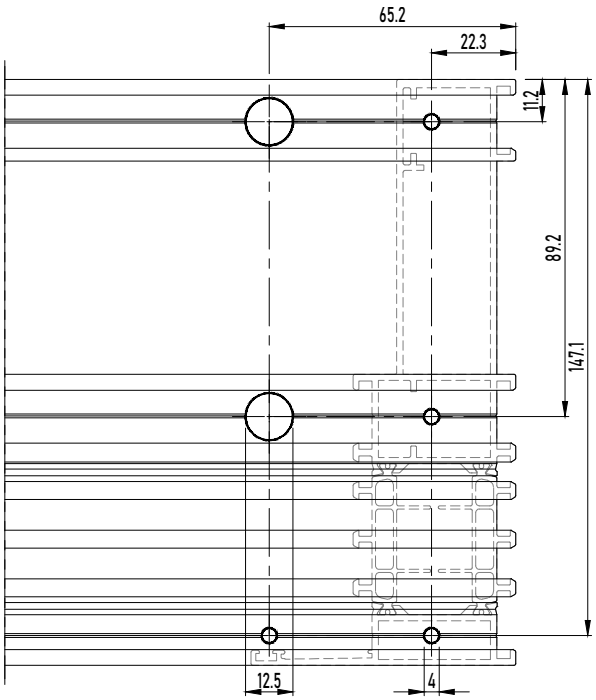

CORNER SCREW MC

GLUE INJECTION + CORNER CONNECTION 197.D800.00

MASTERLINE 8-Fu

A

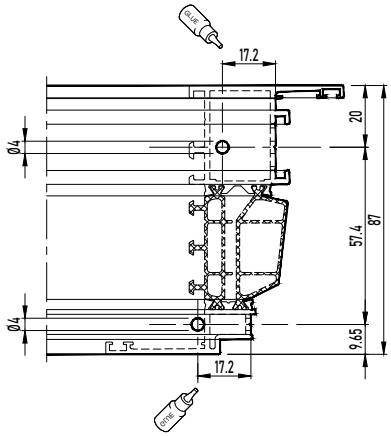

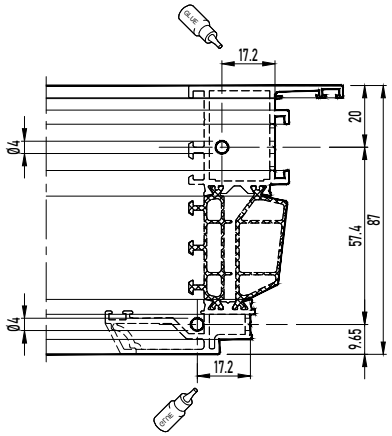

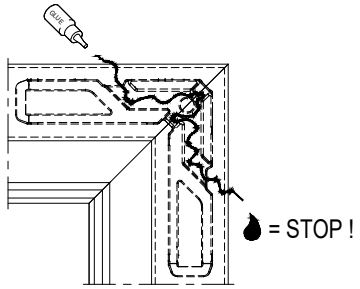

REYNASEAL DUO
REYNASEAL DUO
REYNASEAL DUO
REYNASEAL DUO

LIJMINJECTIE NA VERBINDING
INJECTION DE COLLE APRÈS LA CONNEXION
GLUE INJECTION AFTER CONNECTION
KLEBEINJEKTION NACH DEM ANSCHLUSS

B

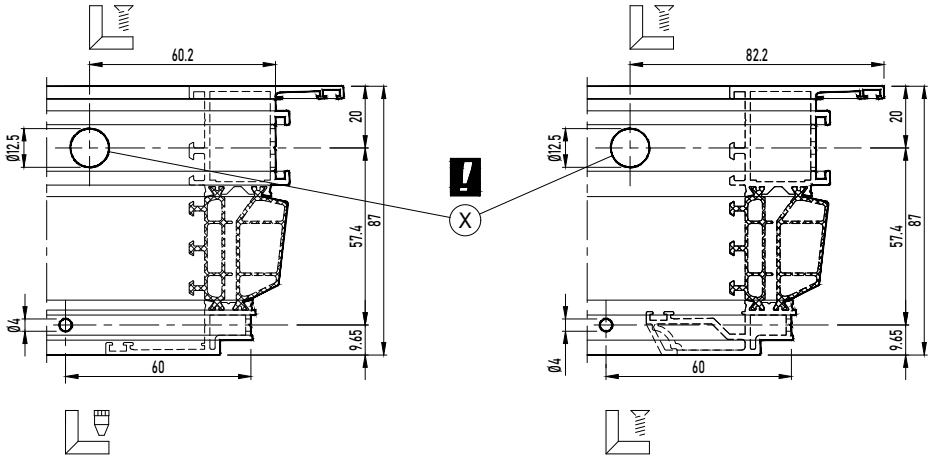

Aanpassing diameter: zie handleiding 197.B700.00 / Modification diamètre: voir manuel 197.B700.00
Change size diameter: see manual 197.B700.00 / Wechsel Durchmesser: siehe Gebrauchsanweisung 197.B700.00

X DICHTINGSMIDDEL
MATIERE D'ETANCHEITE
SEALING AGENT
ABDICHTUNG

LIJMINJECTIE NA VERBINDING
INJECTION DE COLLE APRÈS LA CONNEXION
GLUE INJECTION AFTER CONNECTION
KLEBEINJEKTION NACH DEM ANSCHLUSS

CORNER SCREW MC

GLUE INJECTION + CORNER CONNECTION 197.D800.00

MASTERLINE 8-Fu

A + B

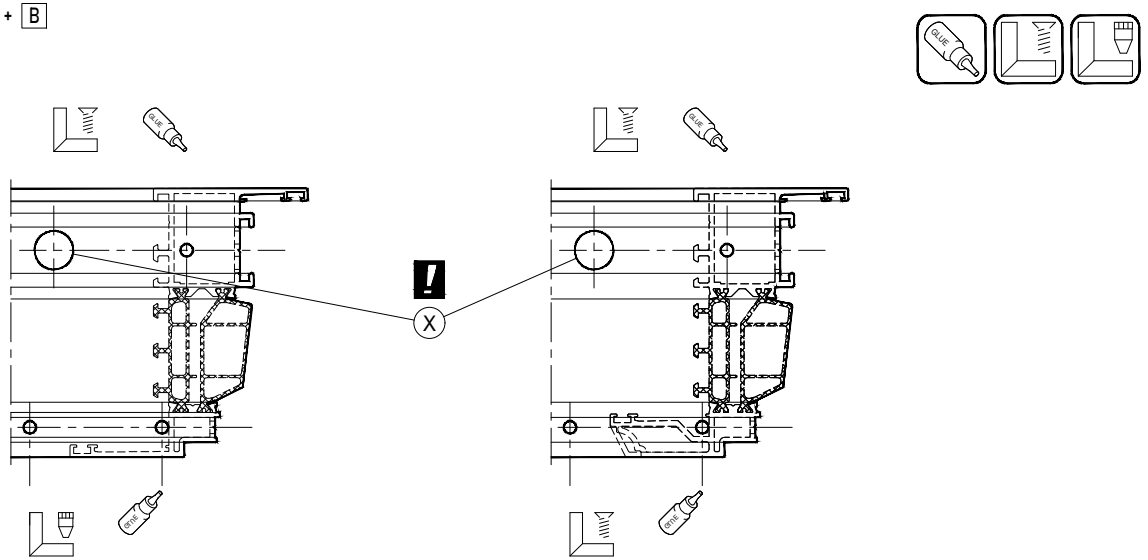

Aanpassing diameter: zie handleiding 197.B600.00
Modification diamètre: voir manuel 197.B600.00
Change size diameter: see manual 197.B600.00
Wechsel Durchmesser: siehe Gebrauchsanweisung 197.B600.00

MONTAGEVOLGORDE L 'ORDRE DE MONTAGE THE ORDER OF ASSEMBLY MONTAGEREIHENFOLGE	1 2 3 .
X	DICHTINGSMIDDEL MATIERE D'ETANCHEITE SEALING AGENT ABDICHTUNG
	LIJMINJECTIE NA VERBINDING INJECTION DE COLLE APRÈS LA CONNEXION GLUE INJECTION AFTER CONNECTION KLEBEINJEKTION NACH DEM ANSCHLUSS

CORNER SCREW MC

GLUE INJECTION + CORNER CONNECTION 197.F900.00

MASTERLINE 8-Fu

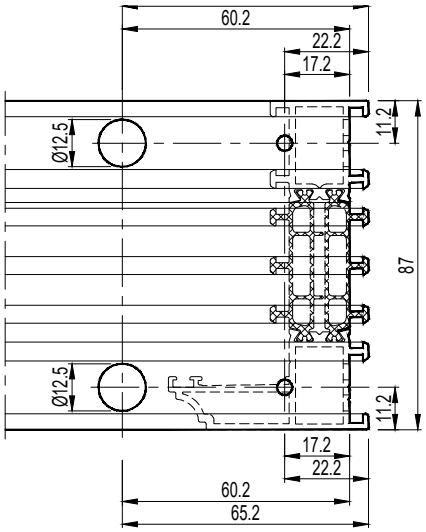

CORNER SCREW MC

GLUE INJECTION + CORNER CONNECTION 197.F900.00

MASTERLINE 8-Fu

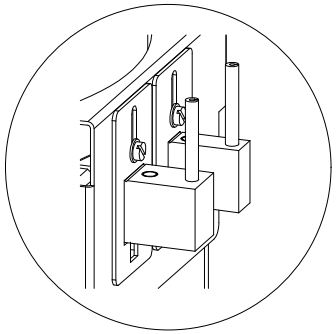

ALGEMEEN PRINCIPE
GENERAL PRINCIPE
GENERAL PRINCIPLE
ALLGEMEIN PRINZIP



A

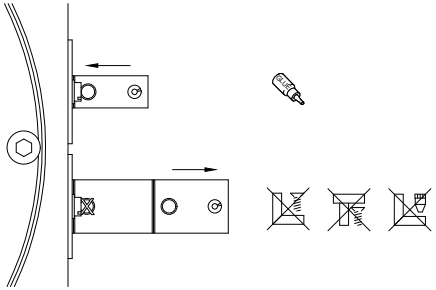



B

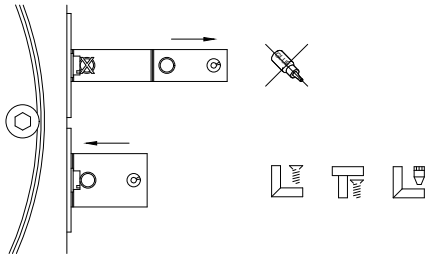

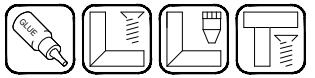

A + B

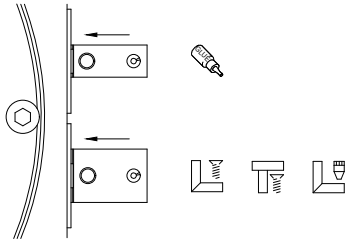

CORNER SCREW MC

GLUE INJECTION + CORNER CONNECTION 197.F900.00

MASTERLINE 8-Fu

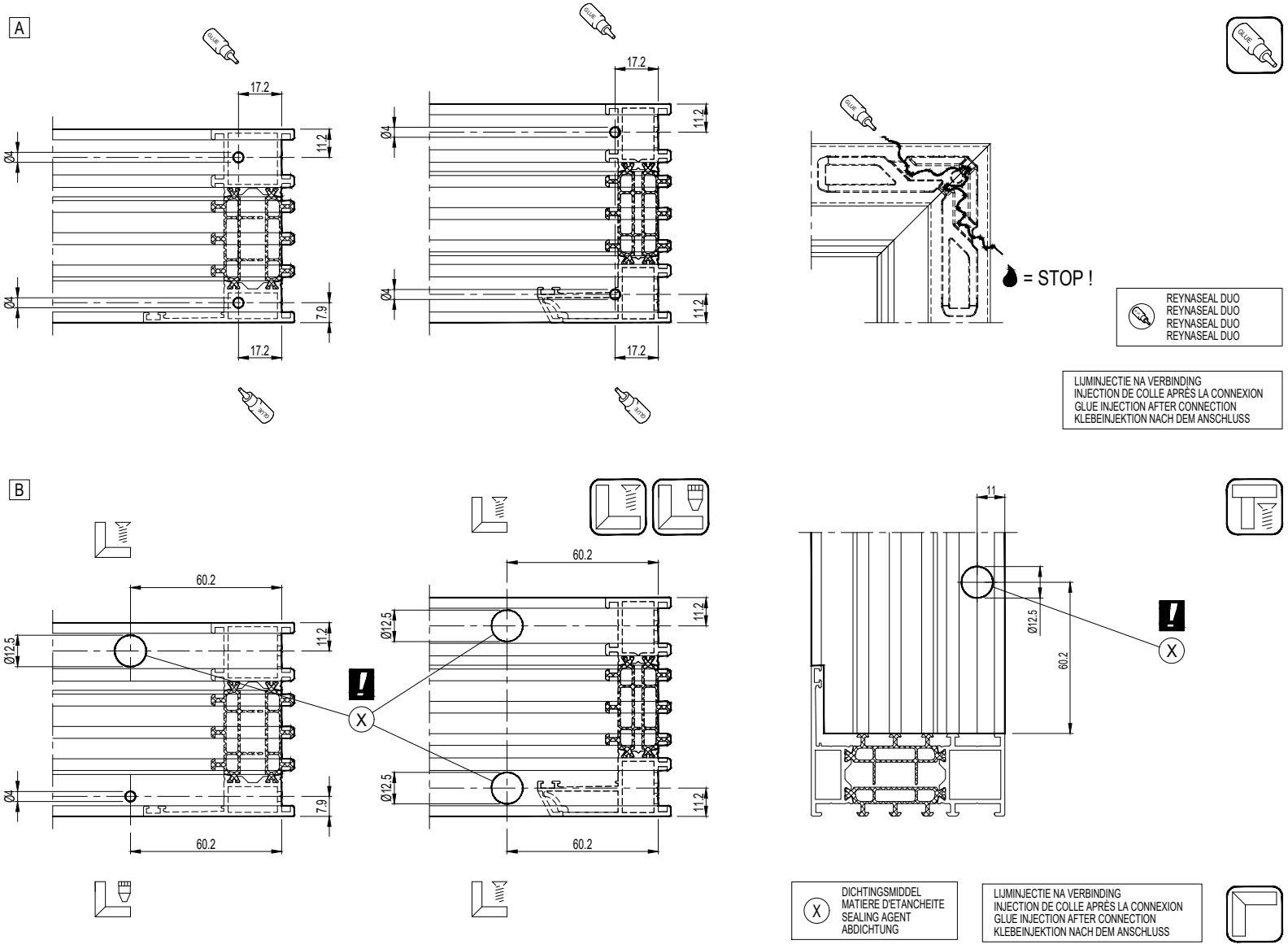

CORNER SCREW MC

GLUE INJECTION + CORNER CONNECTION 197.F900.00

MASTERLINE 8-Fu

A + B

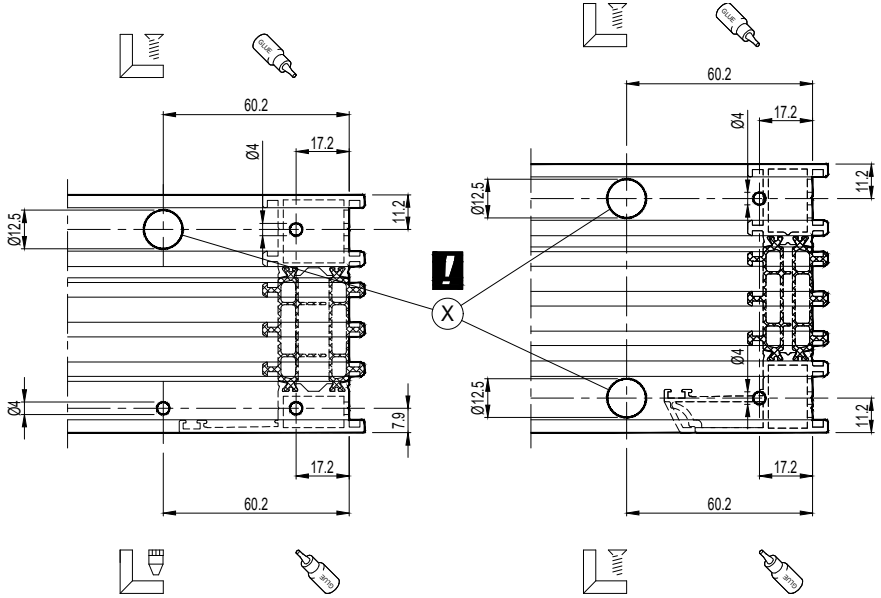

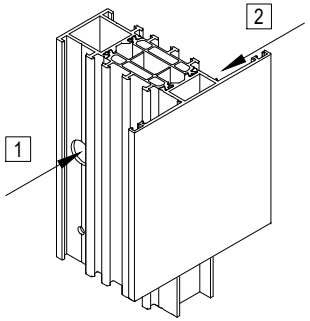

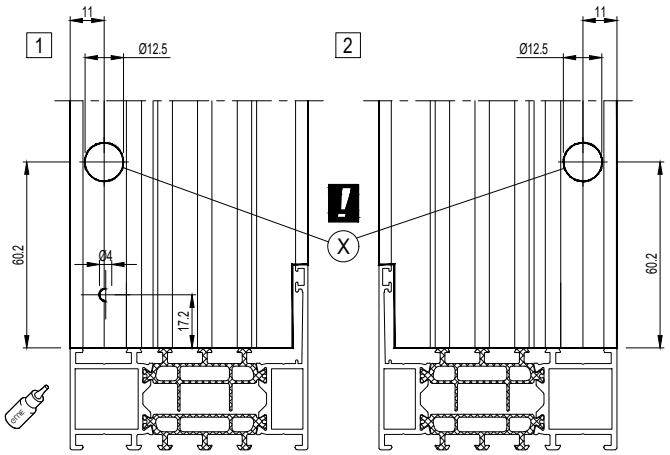

Aanpassing diameter: zie handleiding 197.F900.00
Modification diamètre: voir manuel 197.F900.00
Change size diameter: see manual 197.F900.00
Wechsel Durchmesser: siehe Gebrauchsanweisung 197.F900.00

MONTAGEVOLGORDE
L 'ORDRE DE MONTAGE
THE ORDER OF ASSEMBLY
MONTAGEREIHENFOLGE
1 2 3 .

X DICHTINGSMIDDEL
MATIERE D'ETANCHEITE
SEALING AGENT
ABDICHTUNG

LIJMINJECTIE NA VERBINDING
INJECTION DE COLLE APRÈS LA CONNEXION
GLUE INJECTION AFTER CONNECTION
KLEBEINJEKTION NACH DEM ANSCHLUSS

CORNER SCREW MC

GLUE INJECTION + CORNER CONNECTION 197.D800.00

MASTERLINE 8-Fu

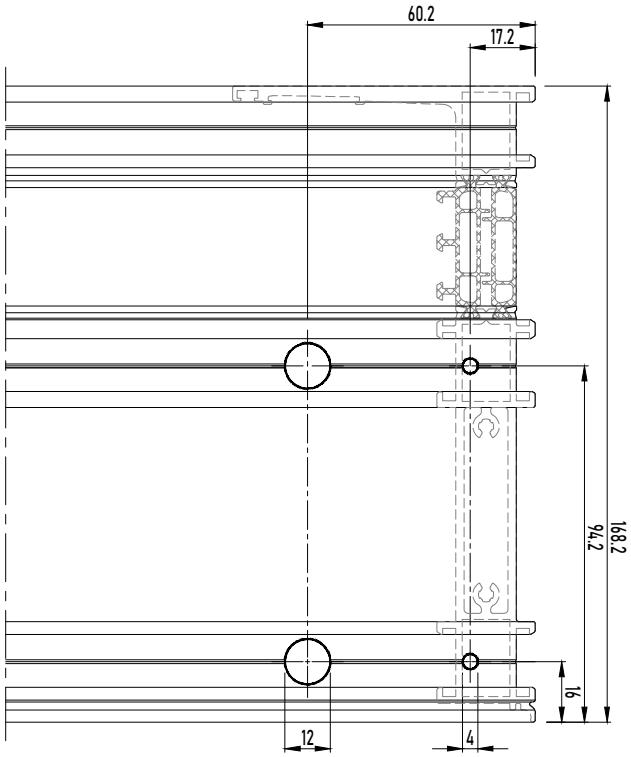

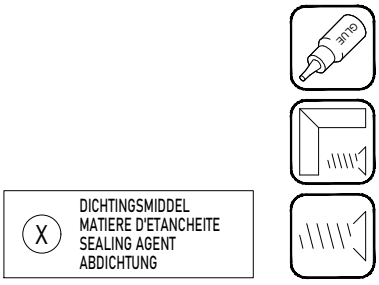

CORNER SCREW MC

GLUE INJECTION + CORNER CONNECTION 197.D800.00

MASTERLINE 8-Fu

A

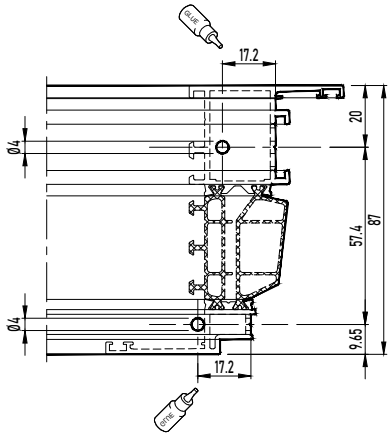

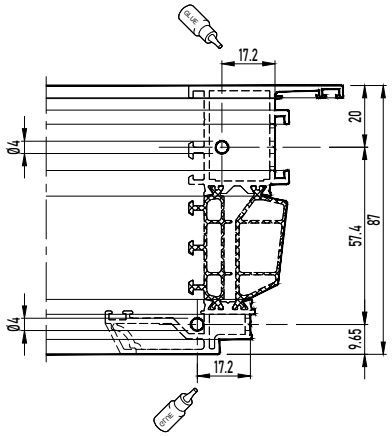

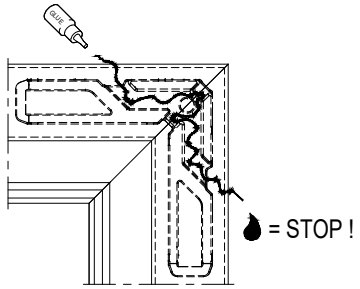



REYNASEAL DUO
REYNASEAL DUO
REYNASEAL DUO
REYNASEAL DUO

LIJMINJECTIE NA VERBINDING
INJECTION DE COLLE APRÈS LA CONNEXION
GLUE INJECTION AFTER CONNECTION
KLEBEINJEKTION NACH DEM ANSCHLUSS

B

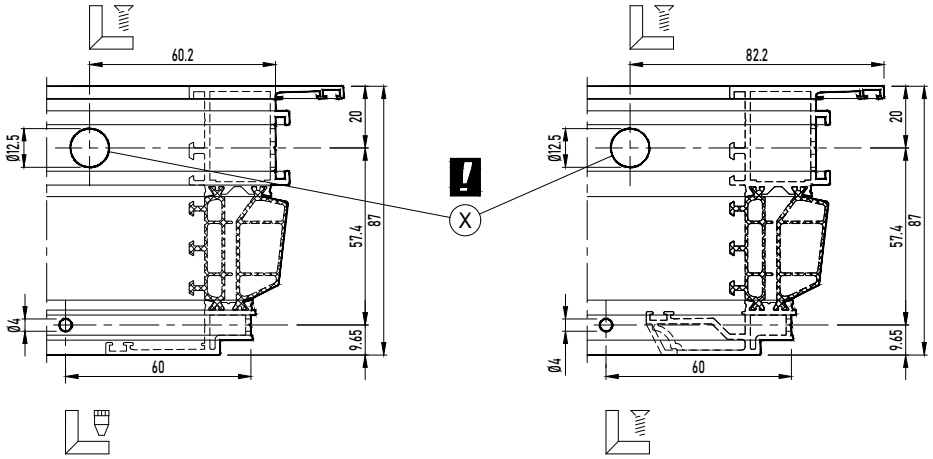

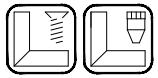

Aanpassing diameter: zie handleiding 197.B700.00 / Modification diamètre: voir manuel 197.B700.00
Change size diameter: see manual 197.B700.00 / Wechsel Durchmesser: siehe Gebrauchsanweisung 197.B700.00

X
DICHTINGSMIDDEL
MATIERE D'ETANCHEITE
SEALING AGENT
ABDICHTUNG

LIJMINJECTIE NA VERBINDING
INJECTION DE COLLE APRÈS LA CONNEXION
GLUE INJECTION AFTER CONNECTION
KLEBEINJEKTION NACH DEM ANSCHLUSS



CORNER SCREW MC

GLUE INJECTION + CORNER CONNECTION 197.D800.00

MASTERLINE 8-Fu

A + B

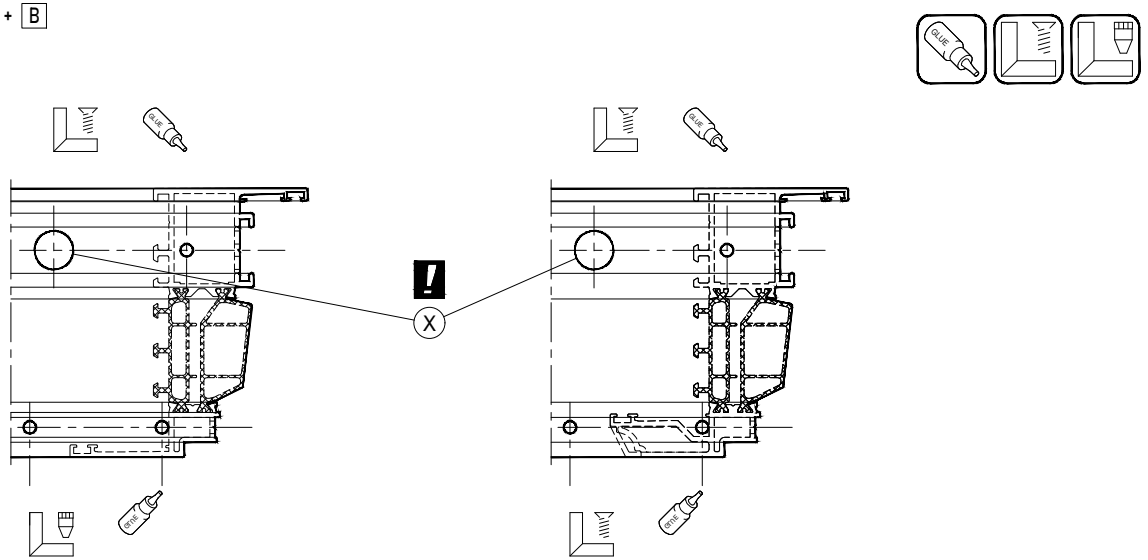

Aanpassing diameter: zie handleiding 197.B600.00
Modification diamètre: voir manuel 197.B600.00
Change size diameter: see manual 197.B600.00
Wechsel Durchmesser: siehe Gebrauchsanweisung 197.B600.00

MONTAGEVOLGORDE L 'ORDRE DE MONTAGE THE ORDER OF ASSEMBLY MONTAGEREIHENFOLGE	1 2 3 .
X	DICHTINGSMIDDEL MATIERE D'ETANCHEITE SEALING AGENT ABDICHTUNG
	LIJMINJECTIE NA VERBINDING INJECTION DE COLLE APRÈS LA CONNEXION GLUE INJECTION AFTER CONNECTION KLEBEINJEKTION NACH DEM ANSCHLUSS

CORNER SCREW MC

GLUE INJECTION + CORNER CONNECTION 197.F900.00

MASTERLINE 8-Fu

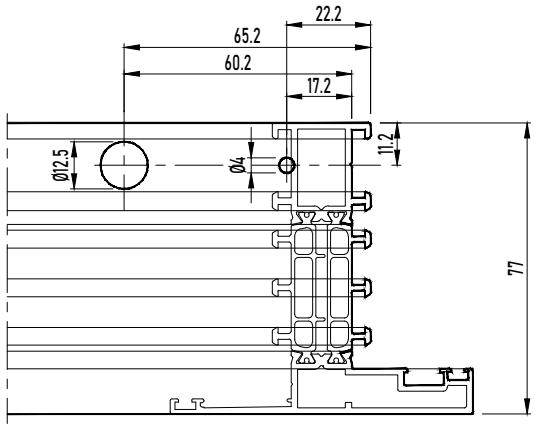

CORNER SCREW MC

GLUE INJECTION + CORNER CONNECTION 197.F900.00

MASTERLINE 8-Fu

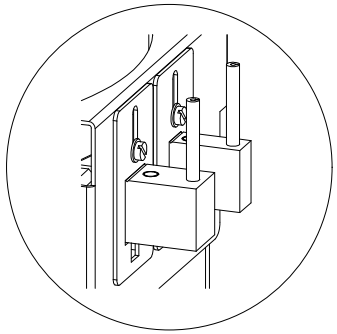

ALGEMEEN PRINCIPE
GENERAL PRINCIPE
GENERAL PRINCIPLE
ALLGEMEIN PRINZIP



A



B

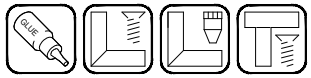

A + B

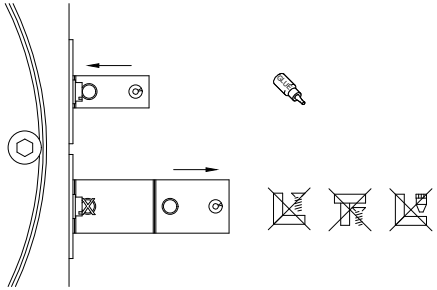

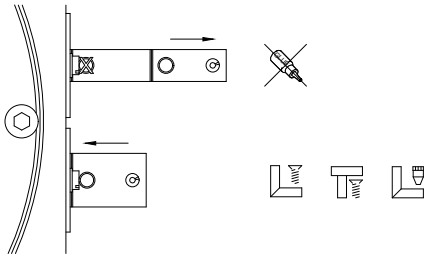

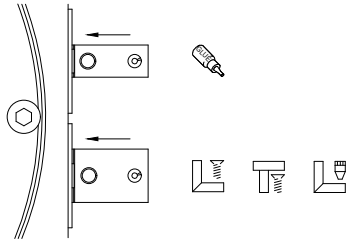

CORNER SCREW MC

GLUE INJECTION + CORNER CONNECTION 197.F900.00

MASTERLINE 8-Fu

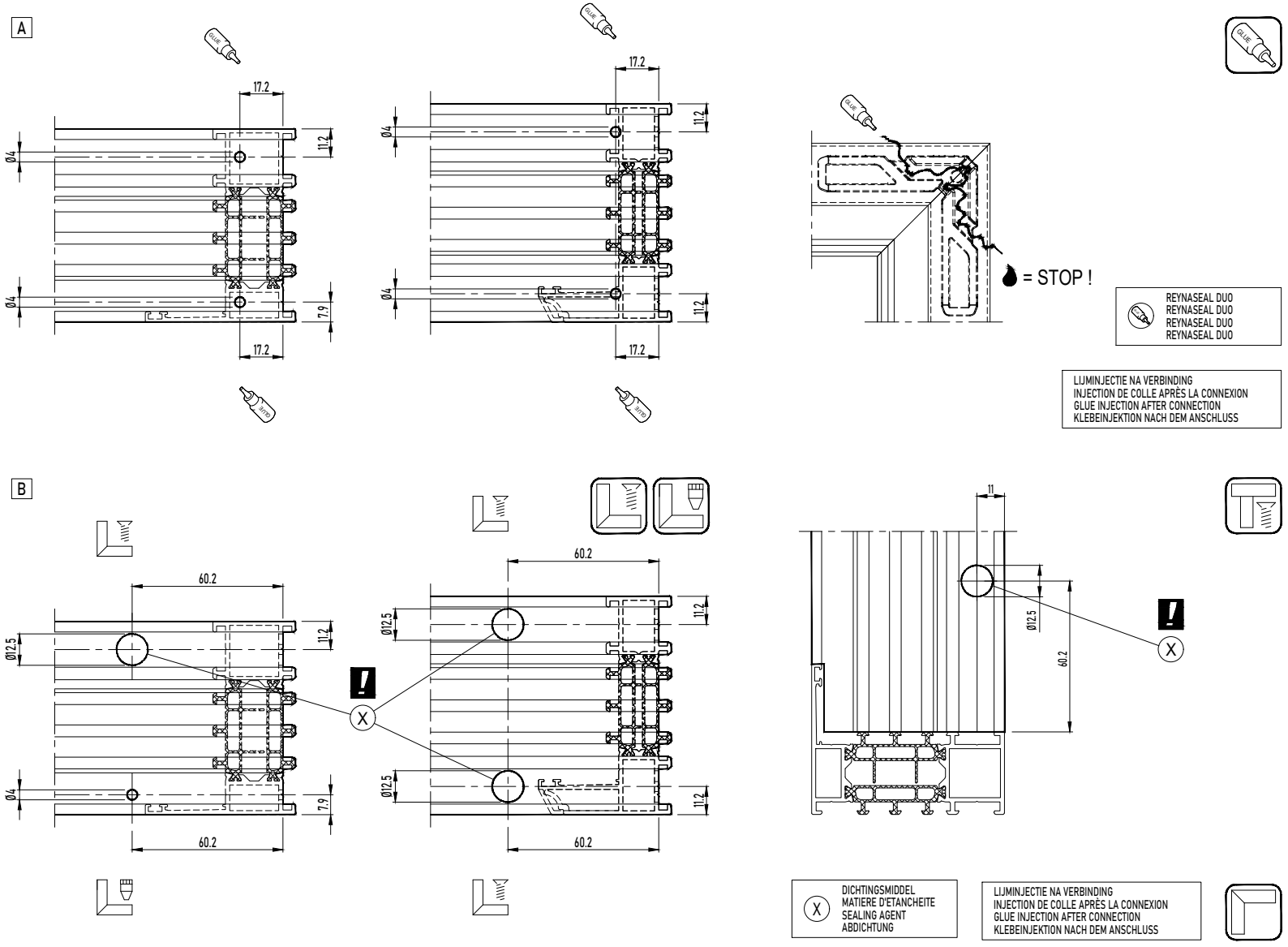

CORNER SCREW MC

GLUE INJECTION + CORNER CONNECTION 197.F900.00

MASTERLINE 8-Fu

A + B

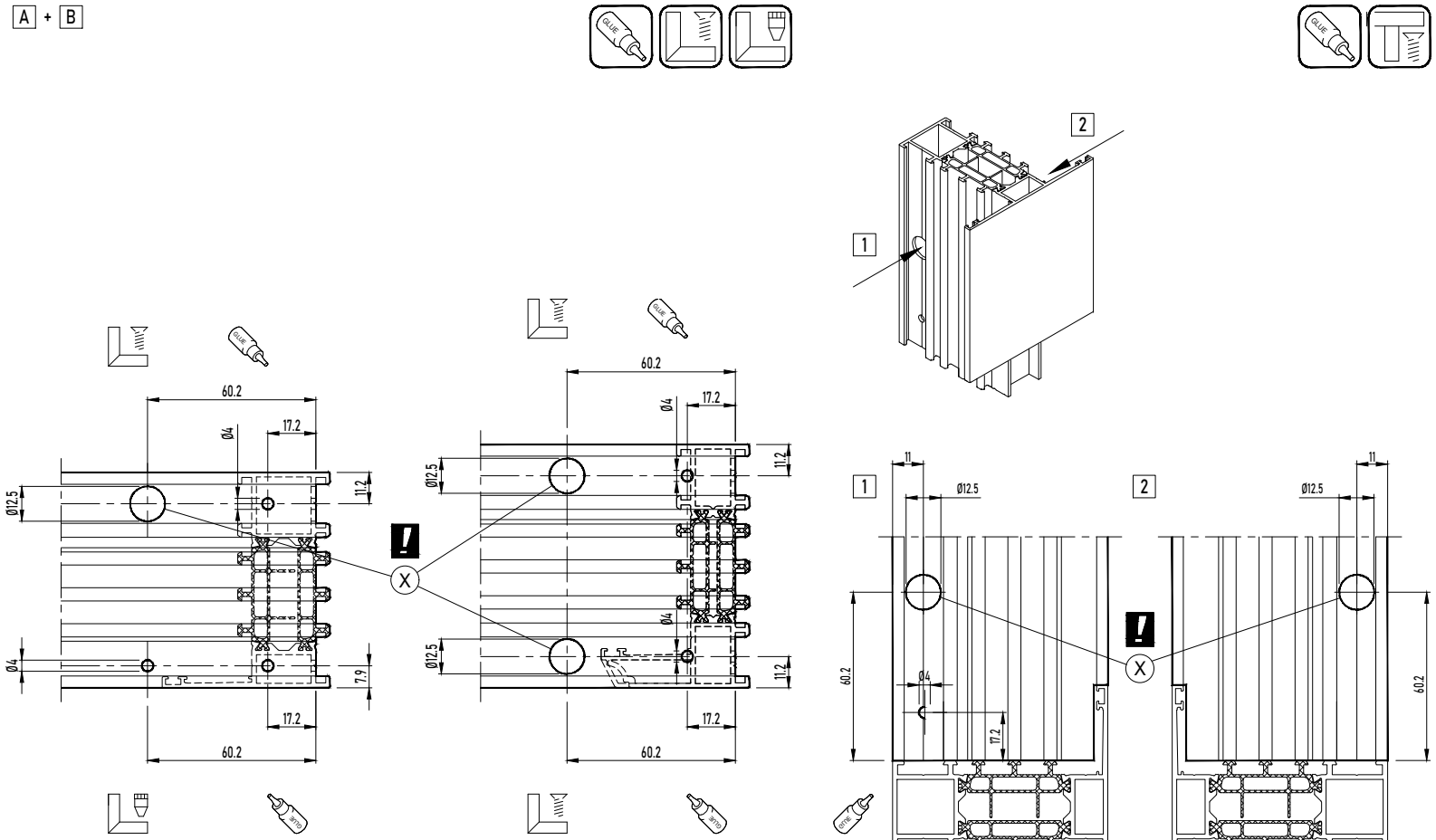

Aanpassing diameter: zie handleiding 197.F900.00
Modification diamètre: voir manuel 197.F900.00
Change size diameter: see manual 197.F900.00
Wechsel Durchmesser: siehe Gebrauchsanweisung 197.F900.00

MONTAGEVOLGORDE L 'ORDRE DE MONTAGE THE ORDER OF ASSEMBLY MONTAGEREIHENFOLGE	1 2 3 .

X	DICHTINGSMIDDEL MATIERE D'ETANCHEITE SEALING AGENT ABDICHTUNG

LIJMINJECTIE NA VERBINDING
INJECTION DE COLLE APRÈS LA CONNEXION
GLUE INJECTION AFTER CONNECTION
KLEBEINJEKTION NACH DEM ANSCHLUSS

CORNER SCREW MC

GLUE INJECTION + CORNER CONNECTION 197.D600.00

MASTERLINE 8-Fu

!	169.9496.04 MOETEN SAMEN WORDEN GEÏNSTALLERD MET 068.7798.04 OF 168.7073.00 169.9496.04 DOIT ÊTRE INSTALLÉ ENSEMBLE AVEC 168.7088.00 OU 168.7073.00 169.9496.04 MUST BE INSTALLED TOGETHER WITH 168.7088.00 OR 168.7073.00 169.9496.04 MUSS ZUSAMMEN MIT 168.7088.00 ODER 168.7073.00 INSTALLIERT WERDEN

!	ENKEL BIJ 408.0094.XX EN 408.0096.XX SEULEMENT POUR 408.0094.XX ET 408.0096.XX ONLY FOR 408.0094.XX AND 408.0096.XX NUR BEI 408.0094.XX UND 408.0096.XX

LIJMINJECTIE NA VERBINDING
INJECTION DE COLLE APRÈS LA CONNEXION
GLUE INJECTION AFTER CONNECTION
KLEBEINJEKTION NACH DEM ANSCHLUSS

X DICHTINGSMIDDEL
MATIERE D'ETANCHEITE
SEALING AGENT
ABDICHTUNG



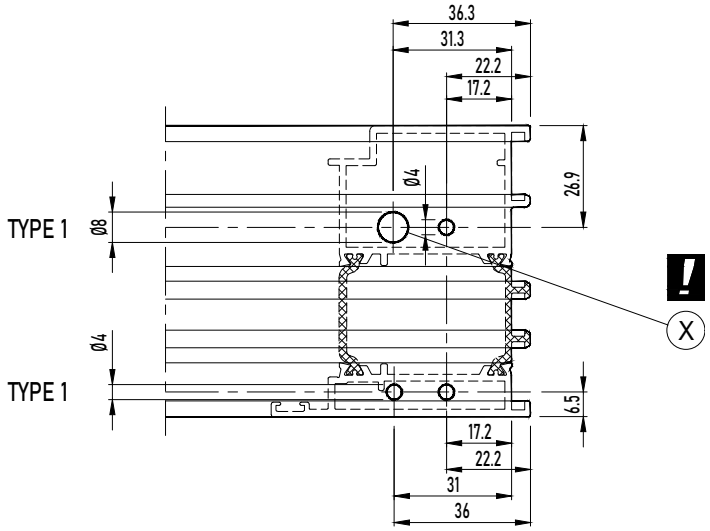

CORNER SCREW MC

GLUE INJECTION + CORNER CONNECTION 197.D600.00

MASTERLINE 8-Fu

!	169.9496.04 MOETEN SAMEN WORDEN GEÏNSTALLERD MET 068.7798.04 OF 168.7073.00 169.9496.04 DOIT ÊTRE INSTALLÉ ENSEMBLE AVEC 168.7088.00 OU 168.7073.00 169.9496.04 MUST BE INSTALLED TOGETHER WITH 168.7088.00 OR 168.7073.00 169.9496.04 MUSS ZUSAMMEN MIT 168.7088.00 ODER 168.7073.00 INSTALLIERT WERDEN
!	ENKEL BIJ 408.0094.XX EN 408.0096.XX SEULEMENT POUR 408.0094.XX ET 408.0096.XX ONLY FOR 408.0094.XX AND 408.0096.XX NUR BEI 408.0094.XX UND 408.0096.XX

LIJMINJECTIE NA VERBINDING INJECTION DE COLLE APRÈS LA CONNEXION GLUE INJECTION AFTER CONNECTION KLEBEINJEKTION NACH DEM ANSCHLUSS	(X) DICHTINGSMIDDEL MATIERE D'ETANCHEITE SEALING AGENT ABDICHTUNG



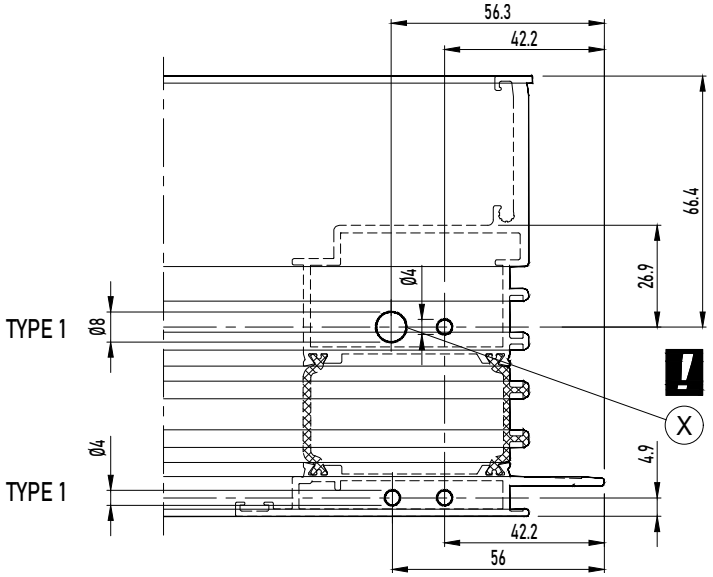

CORNER SCREW MC

GLUE INJECTION + CORNER CONNECTION 197.D600.00

MASTERLINE 8-Fu

!	169.9496.04 MOETEN SAMEN WORDEN GEÏNSTALLERD MET 068.7798.04 OF 168.7073.00 169.9496.04 DOIT ÊTRE INSTALLÉ ENSEMBLE AVEC 168.7088.00 OU 168.7073.00 169.9496.04 MUST BE INSTALLED TOGETHER WITH 168.7088.00 OR 168.7073.00 169.9496.04 MUSS ZUSAMMEN MIT 168.7088.00 ODER 168.7073.00 INSTALLIERT WERDEN
!	ENKEL BIJ 408.0094.XX EN 408.0096.XX SEULEMENT POUR 408.0094.XX ET 408.0096.XX ONLY FOR 408.0094.XX AND 408.0096.XX NUR BEI 408.0094.XX UND 408.0096.XX

LIJMINJECTIE NA VERBINDING INJECTION DE COLLE APRÈS LA CONNEXION GLUE INJECTION AFTER CONNECTION KLEBEINJEKTION NACH DEM ANSCHLUSS	X DICHTINGSMIDDEL MATIERE D'ETANCHEITE SEALING AGENT ABDICHTUNG



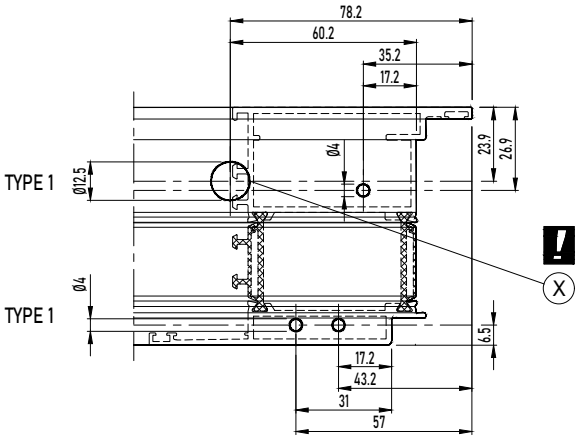

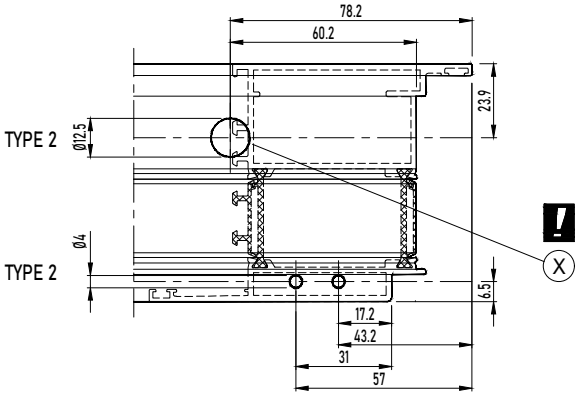

CORNER SCREW MC

SCREW CORNER CONNECTION 097.P300.00 + 097.E700.00

MASTERLINE 8-Fu

097.E700.00 --> VERGROOT DE DIAMETER NAAR 4MM
097.E700.00 --> AUGMENTER LE DIAMETRE A 4MM
097.E700.00 --> INCREASE THE DIAMETER TO 4MM
097.E700.00 --> ERHÖHEN SIE DEN DURCHMESSER AUF 4MM

X DICHTINGSMIDDEL
MATIERE D'ETANCHEITE
SEALING AGENT
ABDICHTUNG



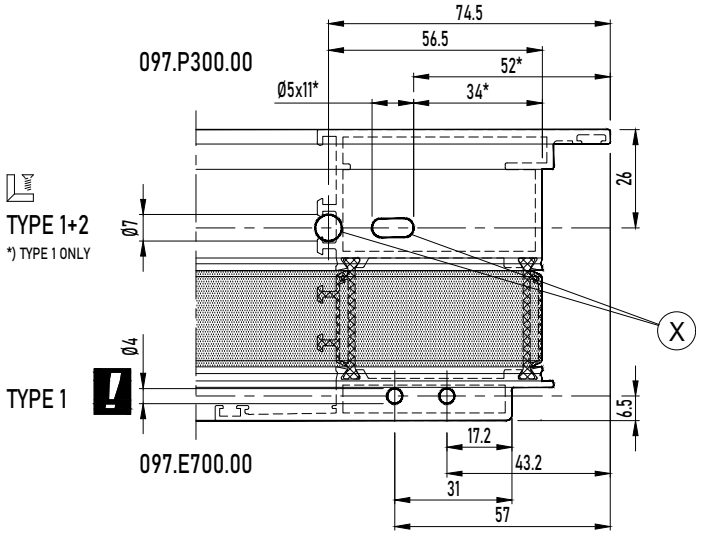

CORNER SCREW MC

SCREW CORNER CONNECTION 097.P300.00 + 097.E700.00

MASTERLINE 8-Fu

097.E700.00 --> VERGROOT DE DIAMETER NAAR 4MM
097.E700.00 --> AUGMENTER LE DIAMETRE A 4MM
097.E700.00 --> INCREASE THE DIAMETER TO 4MM
097.E700.00 --> ERHÖHEN SIE DEN DURCHMESSER AUF 4MM

X DICHTINGSMIDDEL
MATIERE D'ETANCHEITE
SEALING AGENT
ABDICHTUNG

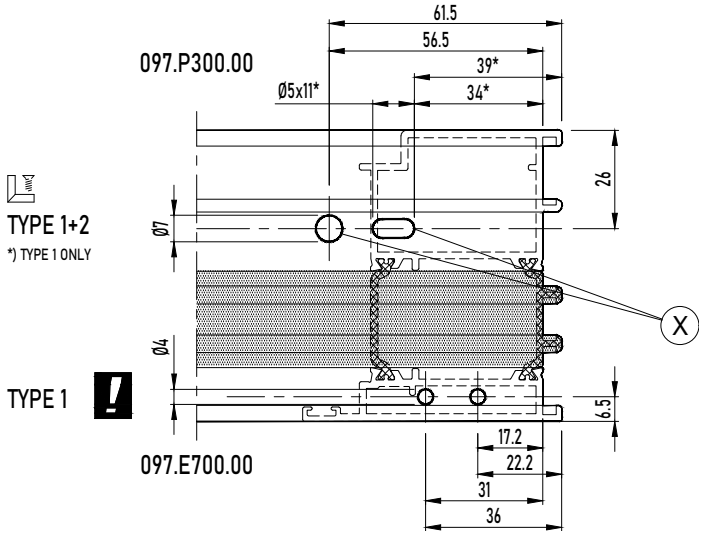

CORNER SCREW MC

SCREW CORNER CONNECTION 097.P300.00 + 097.E700.00

MASTERLINE 8-Fu

097.E700.00 --> VERGROOT DE DIAMETER NAAR 4MM
097.E700.00 --> AUGMENTER LE DIAMETRE A 4MM
097.E700.00 --> INCREASE THE DIAMETER TO 4MM
097.E700.00 --> ERHÖHEN SIE DEN DURCHMESSER AUF 4MM

X DICHTINGSMIDDEL
MATIERE D'ETANCHEITE
SEALING AGENT
ABDICHTUNG

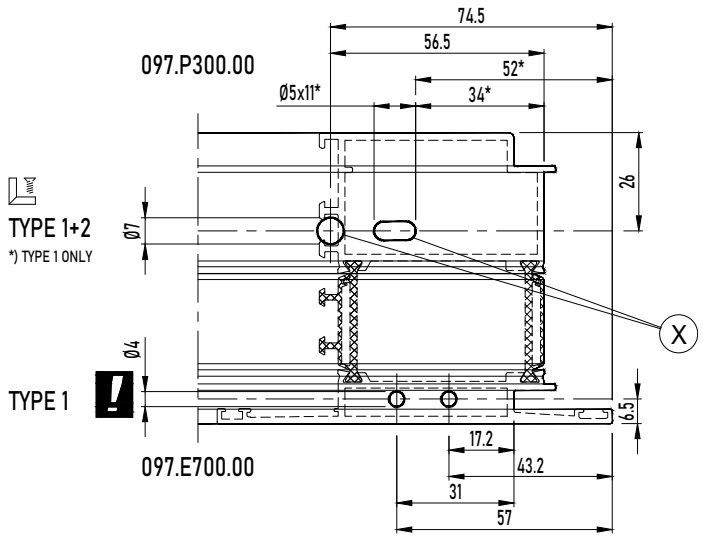

CORNER SCREW MC

SCREW CORNER CONNECTION 097.P300.00 + 097.E700.00

MASTERLINE 8-Fu



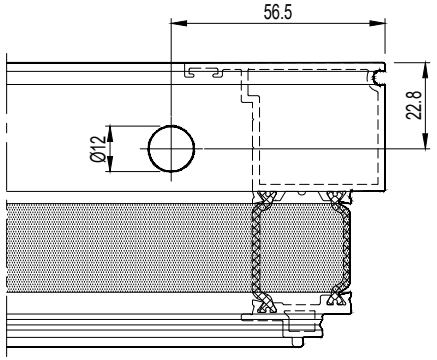

CORNER SCREW MC GLUE INJECTION

GLUE INJECTION + CORNER CONNECTION 197.F900.00 | 097.0183.00

MASTERLINE 8-Fu

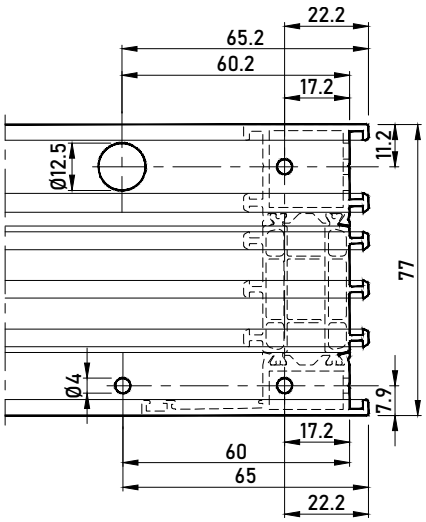

CORNER SCREW MC GLUE INJECTION

GLUE INJECTION + CORNER CONNECTION 197.F900.00 | 097.0183.00

MASTERLINE 8-Fu

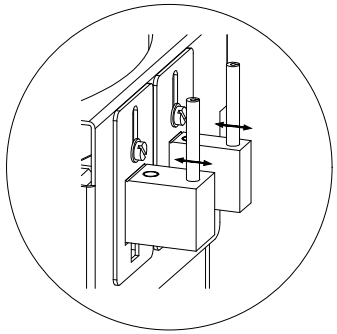

ALGEMEEN PRINCIPE
GENERAL PRINCIPE
GENERAL PRINCIPLE
ALLGEMEIN PRINZIP



A

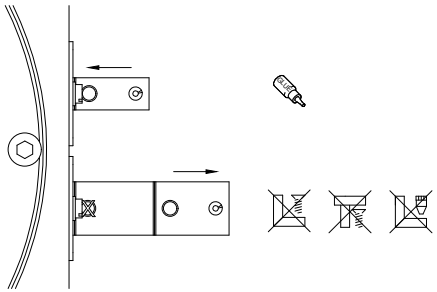



B

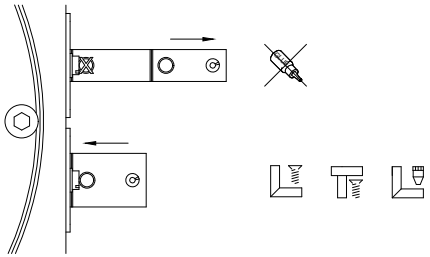

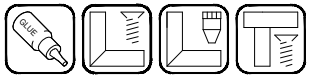

A + B

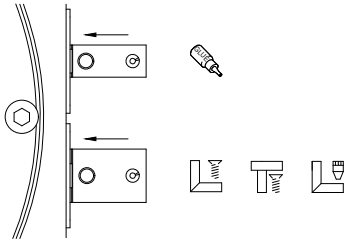

CORNER SCREW MFPT

GLUE INJECTION + CORNER CONNECTION 197.F900.00 | 097.0183.00

MASTERLINE 8-Fu

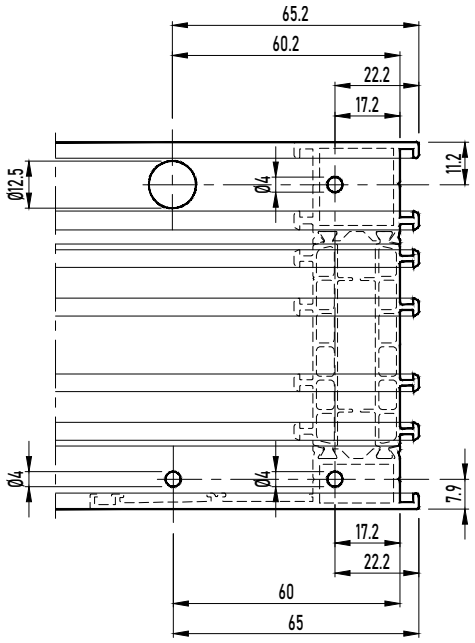

LIJMINJECTIE **NA** VERBINDING
INJECTION DE COLLE **APRÈS** LA CONNEXION
GLUE INJECTION **AFTER** CONNECTION
KLEBEINJEKTION **NACH** DEM ANSCHLUSS

CORNER SCREW MFPT

GLUE INJECTION + CORNER CONNECTION 197.F900.00 | 097.0183.00

MASTERLINE 8-Fu

ALGEMEEN PRINCIPE
GENERAL PRINCIPE
GENERAL PRINCIPLE
ALLGEMEIN PRINZIP

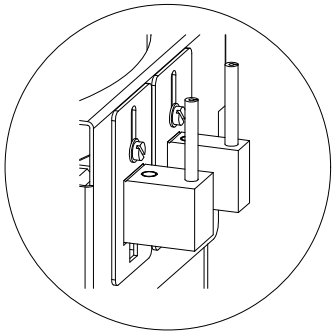



A



B

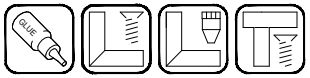

A + B

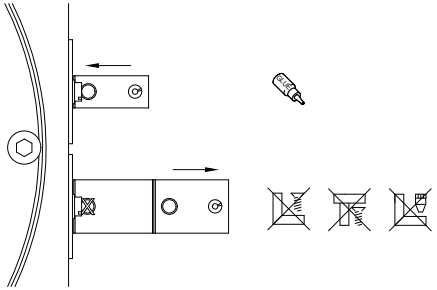

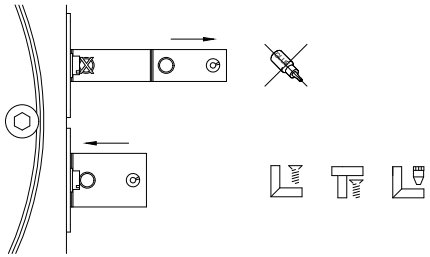

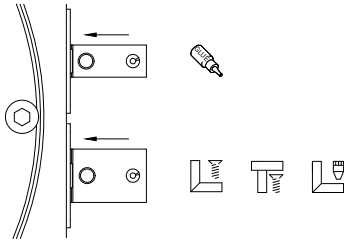

CORNER SCREW MFPT

GLUE INJECTION + CORNER CONNECTION 197.F900.00 | 097.0183.00

MASTERLINE 8-Fu

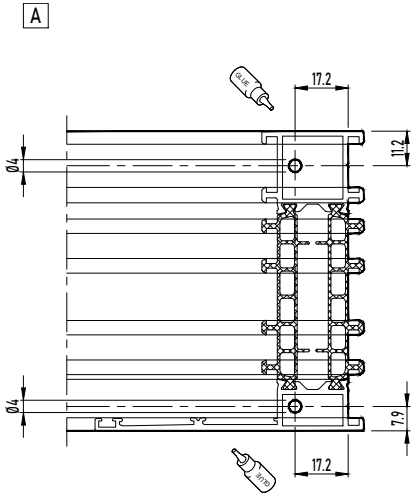

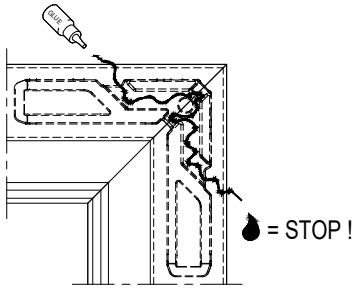

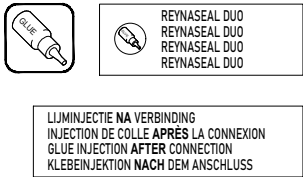

CORNER SCREW MFPT

GLUE INJECTION + CORNER CONNECTION 197.F900.00 | 097.0183.00

MASTERLINE 8-Fu

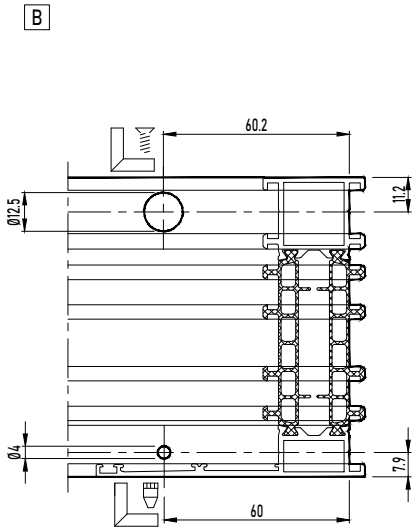

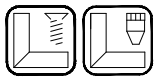

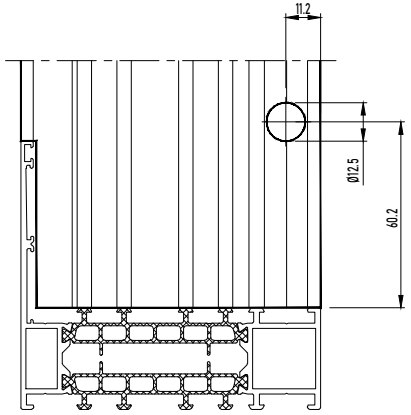

LIJMINJECTIE VOOR VERBINDING
INJECTION DE COLLE AVANT LA CONNEXION
GLUE INJECTION BEFORE CONNECTION
KLEBEINJEKTION VOR ANSCHLUSS



CORNER SCREW MFPT

GLUE INJECTION + CORNER CONNECTION 197.F900.00 | 097.0183.00

MASTERLINE 8-Fu

A + B

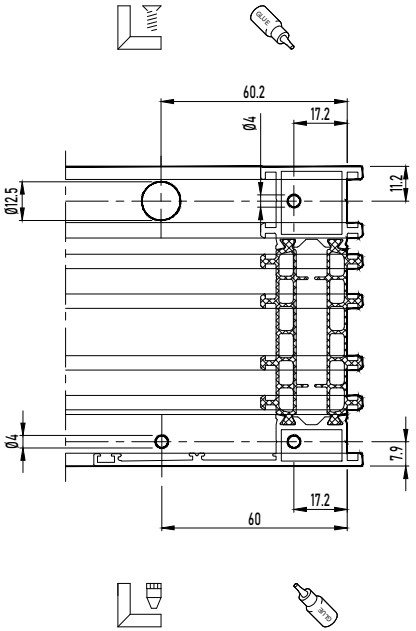

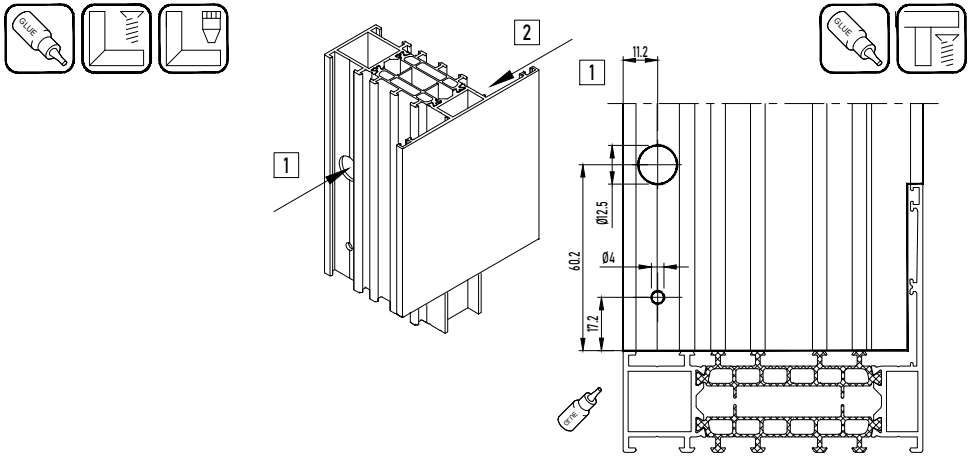

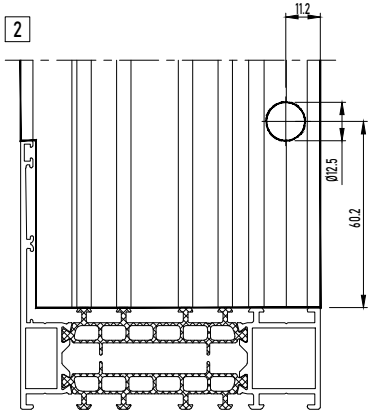

Aanpassing diameter: zie handleiding 197.F900.00
Modification diamètre: voir manuel 197.F900.00
Change size diameter: see manual 197.F900.00
Wechsel Durchmesser: siehe Gebrauchsanweisung 197.F900.00

MONTAGEVOLGORDE
L 'ORDRE DE MONTAGE
THE ORDER OF ASSEMBLY
MONTAGEREIHENFOLGE
1 2 3 .

LIJMINJECTIE **NA** VERBINDING
INJECTION DE COLLE **APRÈS** LA CONNEXION
GLUE INJECTION **AFTER** CONNECTION
KLEBEINJEKTION **NACH** DEM ANSCHLUSS

CORNER SCREW MFPT

GLUE INJECTION + CORNER CONNECTION 197.F900.00 | 097.0183.00

MASTERLINE 8-Fu

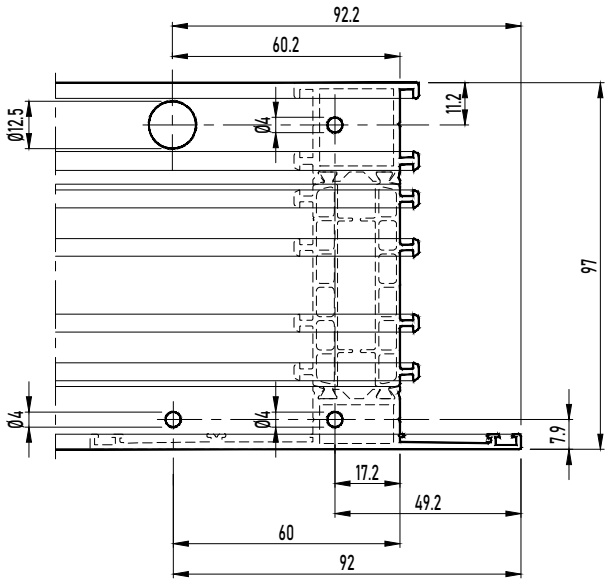

LIJMINJECTIE **NA** VERBINDING
INJECTION DE COLLE **APRÈS** LA CONNEXION
GLUE INJECTION **AFTER** CONNECTION
KLEBEINJEKTION **NACH** DEM ANSCHLUSS

CORNER SCREW MFPT

GLUE INJECTION + CORNER CONNECTION 197.F900.00 | 097.0183.00

MASTERLINE 8-Fu

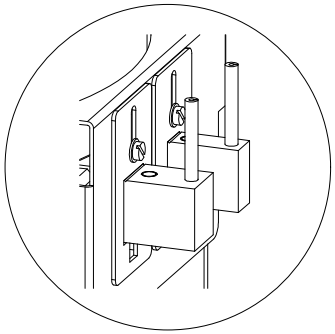

ALGEMEEN PRINCIPE
GENERAL PRINCIPE
GENERAL PRINCIPLE
ALLGEMEIN PRINZIP



A



B

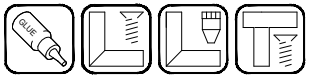

A + B

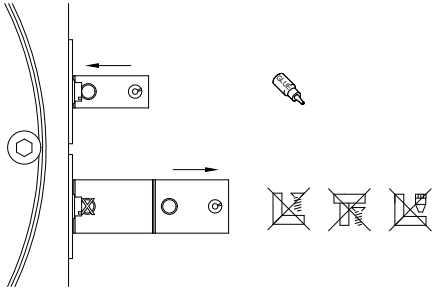

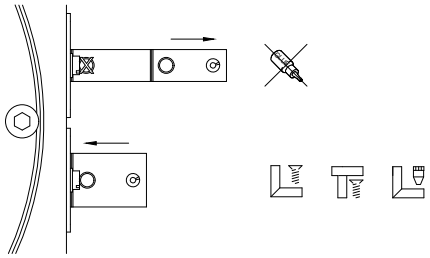

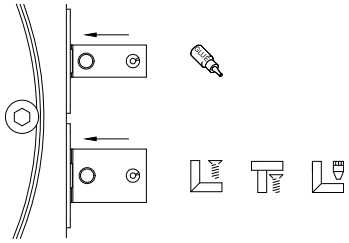

CORNER SCREW MFPT

GLUE INJECTION + CORNER CONNECTION 197.F900.00 | 097.0183.00

MASTERLINE 8-Fu

A

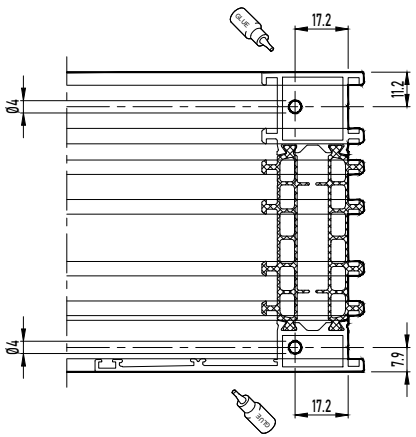

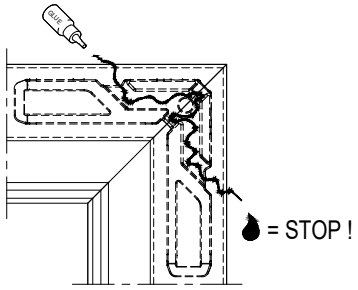

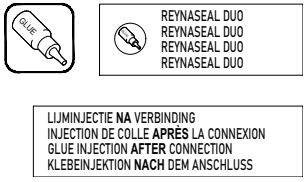

CORNER SCREW MFPT

GLUE INJECTION + CORNER CONNECTION 197.F900.00 | 097.0183.00

MASTERLINE 8-Fu

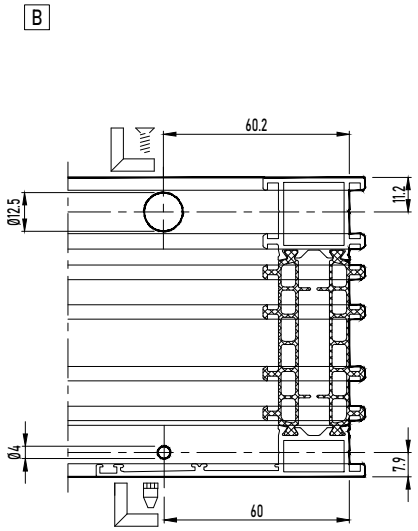

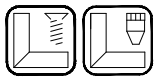

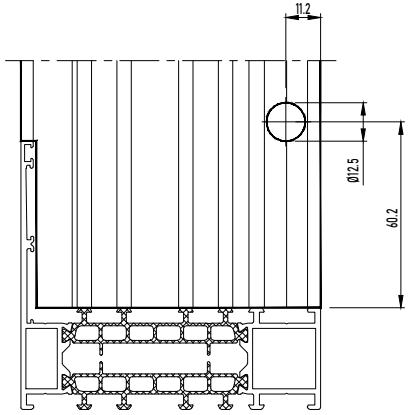

LIJMINJECTIE VOOR VERBINDING
INJECTION DE COLLE AVANT LA CONNEXION
GLUE INJECTION BEFORE CONNECTION
KLEBEINJEKTION VOR ANSCHLUSS



CORNER SCREW MFPT

GLUE INJECTION + CORNER CONNECTION 197.F900.00 | 097.0183.00

MASTERLINE 8-Fu

A + B

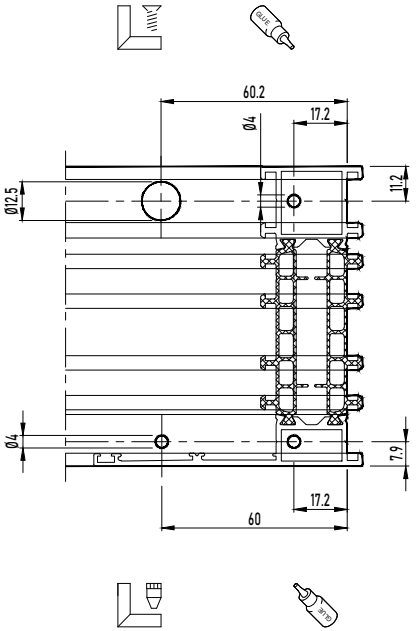

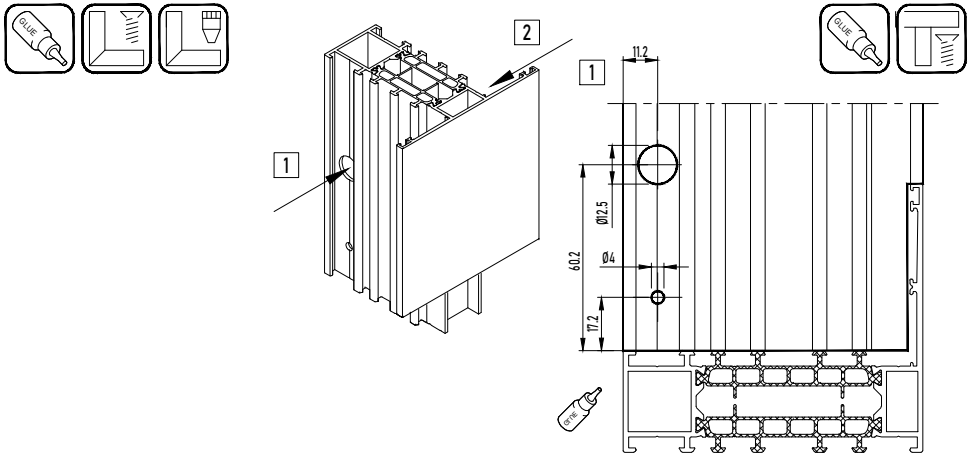

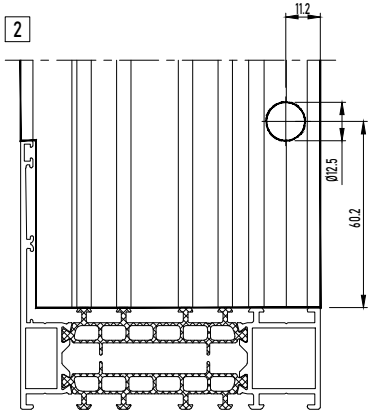

Aanpassing diameter: zie handleiding 197.F900.00
Modification diamètre: voir manuel 197.F900.00
Change size diameter: see manual 197.F900.00
Wechsel Durchmesser: siehe Gebrauchsanweisung 197.F900.00

MONTAGEVOLGORDE
L 'ORDRE DE MONTAGE
THE ORDER OF ASSEMBLY
MONTAGEREIHENFOLGE
1 2 3 .

LIJMINJECTIE **NA** VERBINDING
INJECTION DE COLLE **APRÈS** LA CONNEXION
GLUE INJECTION **AFTER** CONNECTION
KLEBEINJEKTION **NACH** DEM ANSCHLUSS

CORNER SCREW MFPT

GLUE INJECTION + CORNER CONNECTION 197.F900.00 | 097.0183.00

MASTERLINE 8-Fu

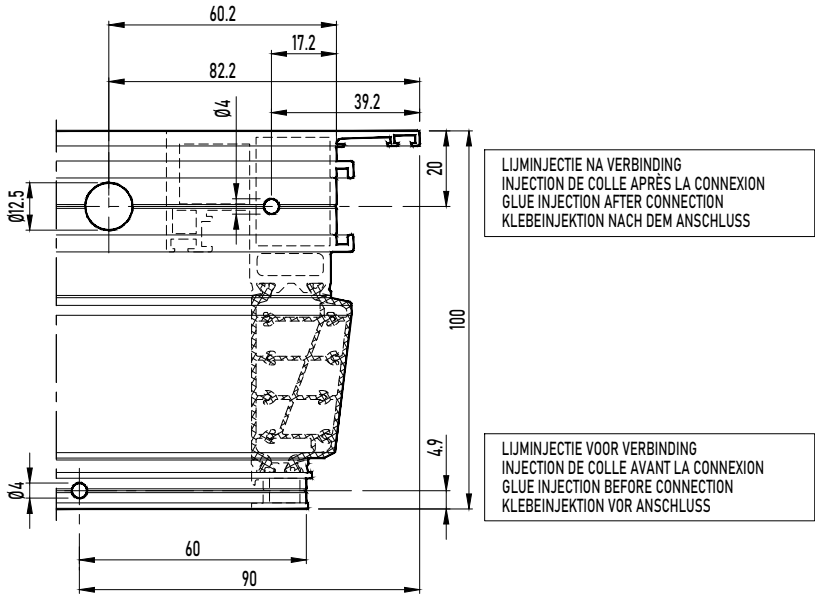

LIJMINJECTIE NA VERBINDING
INJECTION DE COLLE APRÈS LA CONNEXION
GLUE INJECTION AFTER CONNECTION
KLEBEINJEKTION NACH DEM ANSCHLUSS

CORNER SCREW MFPT

GLUE INJECTION + CORNER CONNECTION 197.F900.00 | 097.0183.00

MASTERLINE 8-Fu

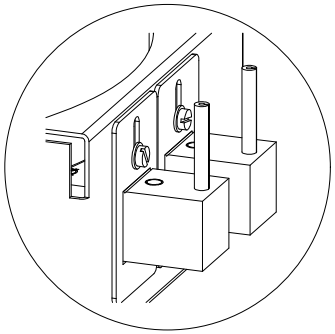

ALGEMEEN PRINCIPE
GENERAL PRINCIPE
GENERAL PRINCIPLE
ALLGEMEIN PRINZIP



A

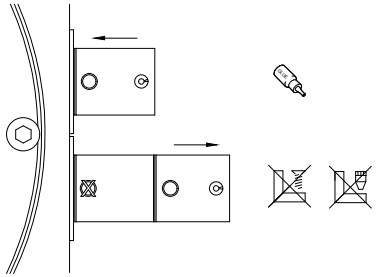

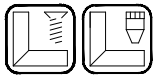

B

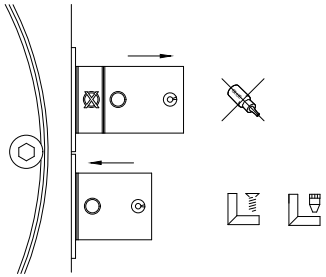



A + B

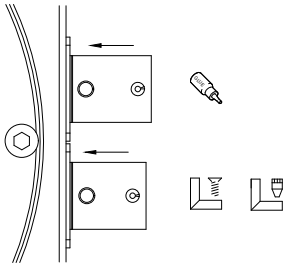

CORNER SCREW MFPT

GLUE INJECTION + CORNER CONNECTION 197.F900.00 | 097.0183.00

MASTERLINE 8-Fu

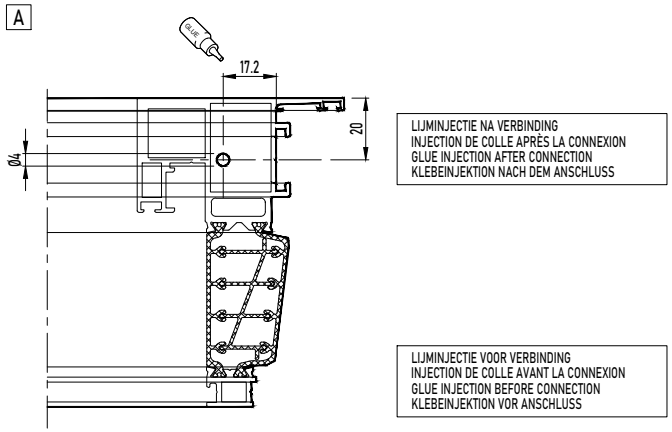

LIJMINJECTIE NA VERBINDING
INJECTION DE COLLE APRÈS LA CONNEXION
GLUE INJECTION AFTER CONNECTION
KLEBEINJEKTION NACH DEM ANSCHLUSS

LIJMINJECTIE VOOR VERBINDING
INJECTION DE COLLE AVANT LA CONNEXION
GLUE INJECTION BEFORE CONNECTION
KLEBEINJEKTION VOR ANSCHLUSS

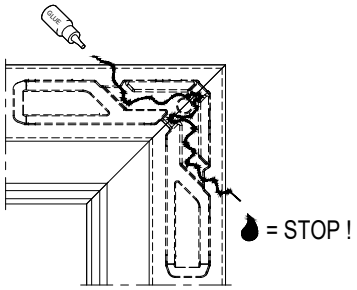



REYNASEAL DUO
REYNASEAL DUO
REYNASEAL DUO
REYNASEAL DUO

CORNER SCREW MFPT

GLUE INJECTION + CORNER CONNECTION 197.F900.00 | 097.0183.00

MASTERLINE 8-Fu

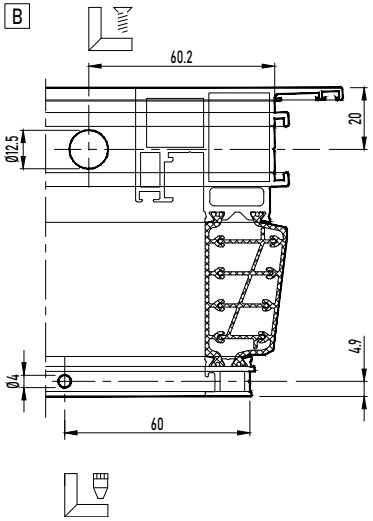

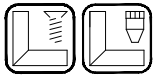

LIJMINJECTIE VOOR VERBINDING
INJECTION DE COLLE AVANT LA CONNEXION
GLUE INJECTION BEFORE CONNECTION
KLEBEINJEKTION VOR ANSCHLUSS

CORNER SCREW MFPT

GLUE INJECTION + CORNER CONNECTION 197.F900.00 | 097.0183.00

MASTERLINE 8-Fu

A + B

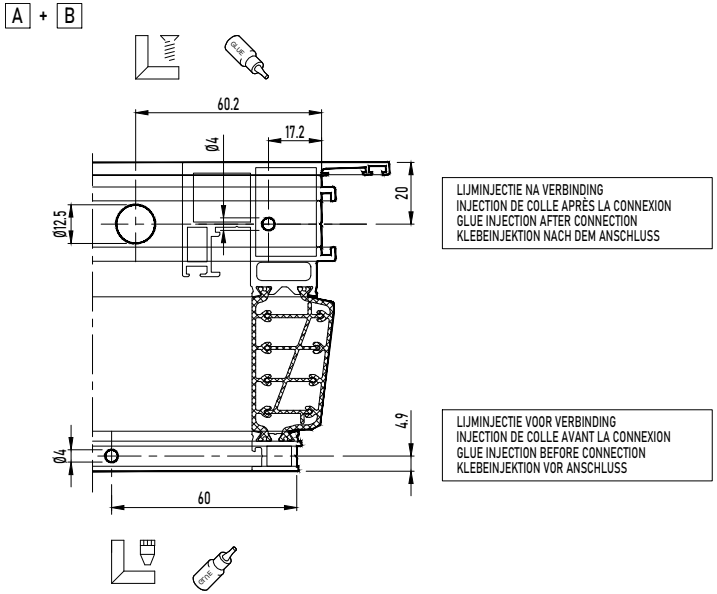

LIJMINJECTIE NA VERBINDING
INJECTION DE COLLE APRÈS LA CONNEXION
GLUE INJECTION AFTER CONNECTION
KLEBEINJEKTION NACH DEM ANSCHLUSS

LIJMINJECTIE VOOR VERBINDING
INJECTION DE COLLE AVANT LA CONNEXION
GLUE INJECTION BEFORE CONNECTION
KLEBEINJEKTION VOR ANSCHLUSS



REYNASEAL DUO
REYNASEAL DUO
REYNASEAL DUO
REYNASEAL DUO

MONTAGEVOLGORDE
L'ORDRE DE MONTAGE
THE ORDER OF ASSEMBLY
MONTAGEREIHENFOLGE
1 2 3 .



CORNER SCREW MFPT

GLUE INJECTION + CORNER CONNECTION 197.F900.00 | 097.0183.00

MASTERLINE 8-Fu

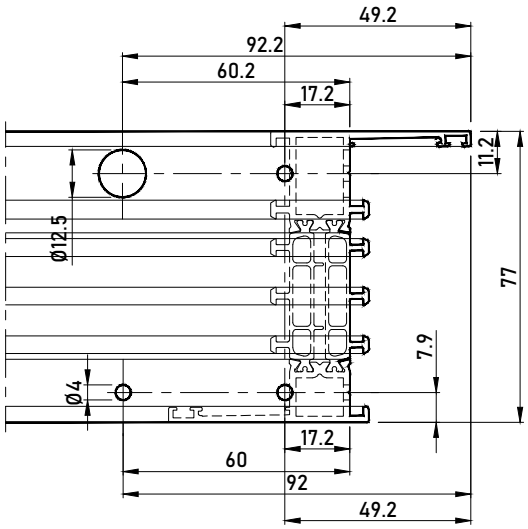

CORNER SCREW MFPT

GLUE INJECTION + CORNER CONNECTION 197.F900.00 | 097.0183.00

MASTERLINE 8-Fu

ALGEMEEN PRINCIPE
GENERAL PRINCIPE
GENERAL PRINCIPLE
ALLGEMEIN PRINZIP

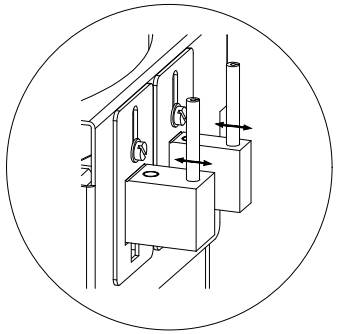



A



B

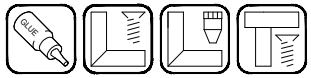

A + B

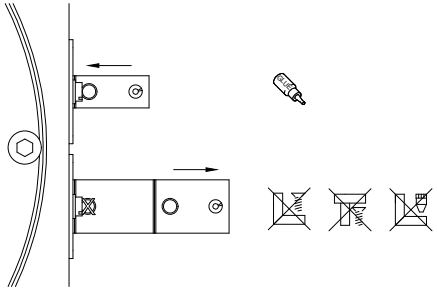

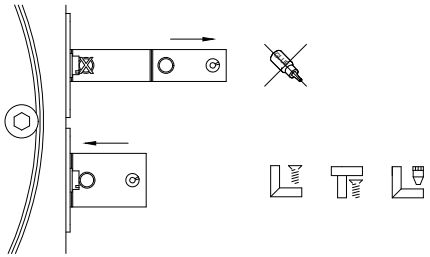

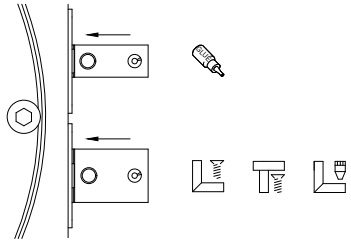

CORNER SCREW MFPT

GLUE INJECTION + CORNER CONNECTION 197.F900.00 | 097.0183.00

MASTERLINE 8-Fu

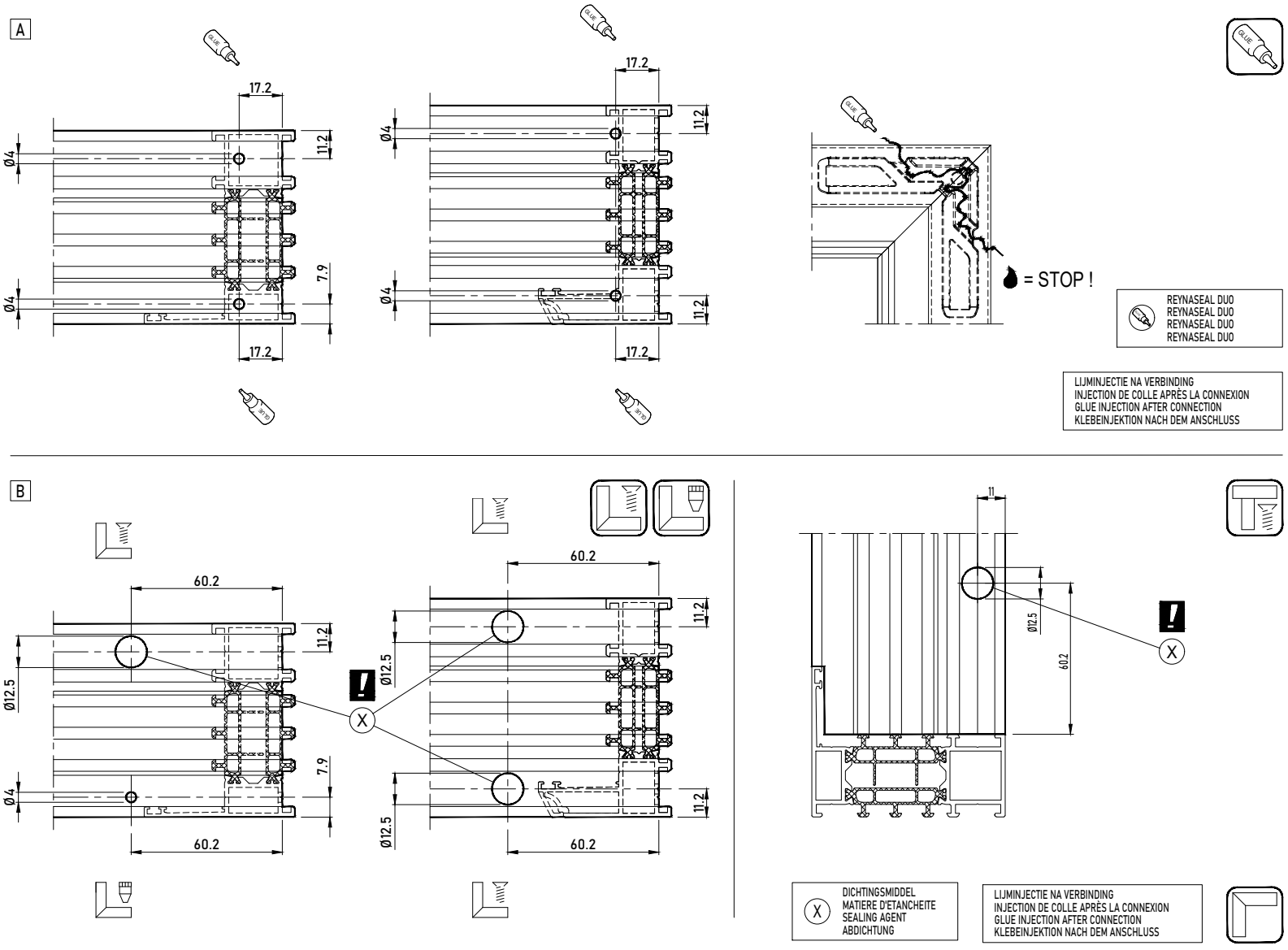

CORNER SCREW MFPT

GLUE INJECTION + CORNER CONNECTION 197.F900.00 | 097.0183.00

MASTERLINE 8-Fu

A + B

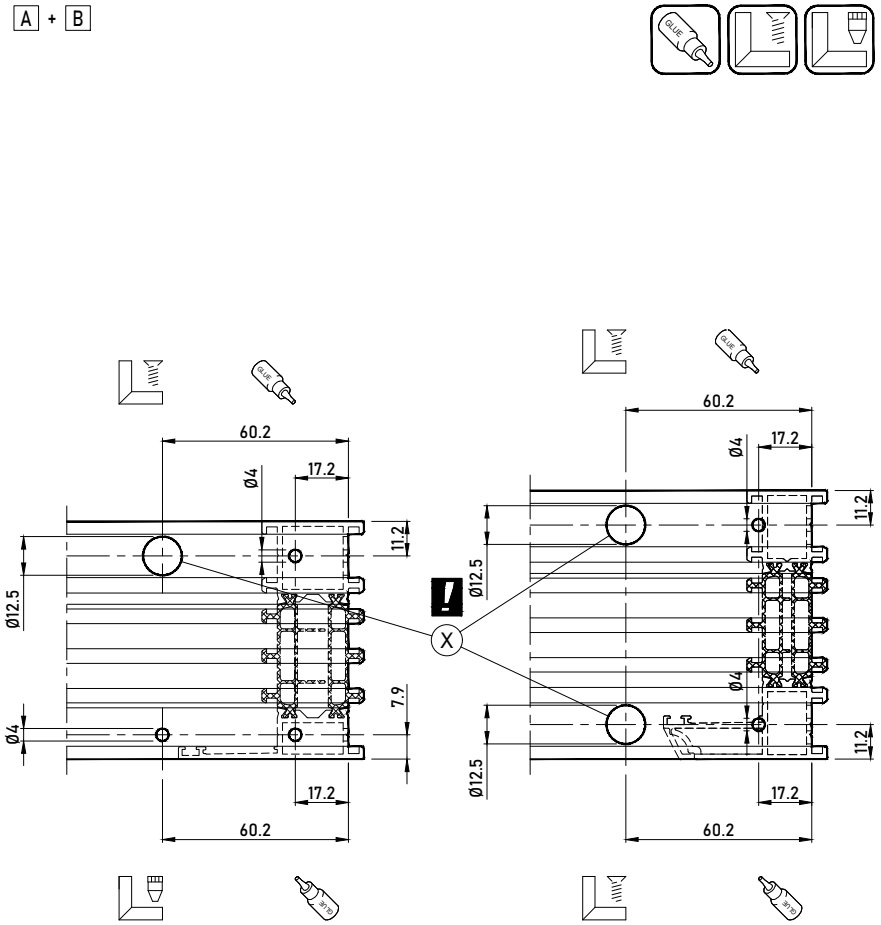

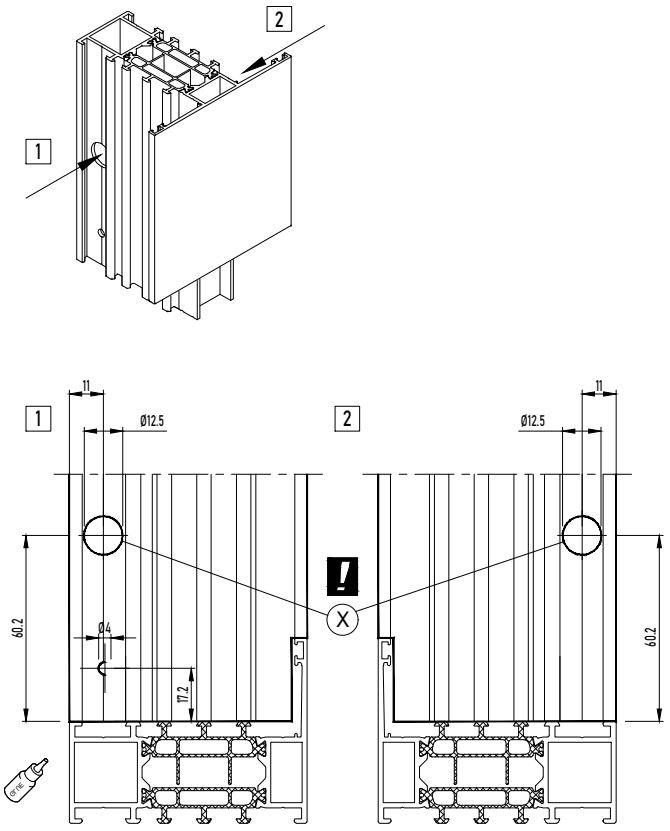

Aanpassing diameter: zie handleiding 197.F900.00
Modification diamètre: voir manuel 197.F900.00
Change size diameter: see manual 197.F900.00
Wechsel Durchmesser: siehe Gebrauchsanweisung 197.F900.00

MONTAGEVOLGORDE
L'ORDRE DE MONTAGE
THE ORDER OF ASSEMBLY
MONTAGEREIHENFOLGE
1 2 3 .

X DICHTINGSMIDDEL
MATIERE D'ETANCHEITE
SEALING AGENT
ABDICHTUNG

LIJMINJECTIE NA VERBINDING
INJECTION DE COLLE APRÈS LA CONNEXION
GLUE INJECTION AFTER CONNECTION
KLEBEINJEKTION NACH DEM ANSCHLUSS

CORNER SCREW MFPT

GLUE INJECTION + CORNER CONNECTION 197.D800.00 | 097.0183.00

MASTERLINE 8-Fu

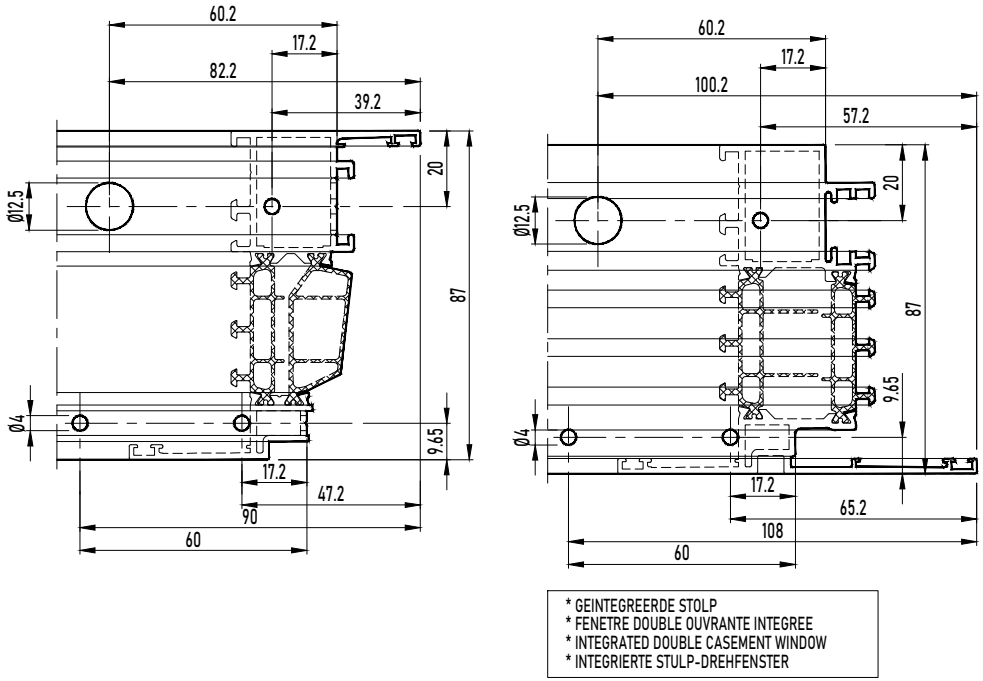

CORNER SCREW MFPT

GLUE INJECTION + CORNER CONNECTION 197.D800.00 | 097.0183.00

MASTERLINE 8-Fu

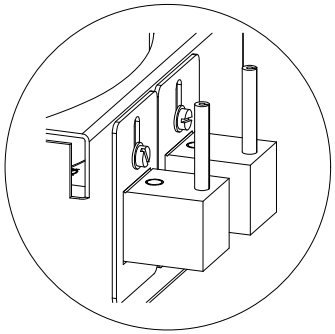

ALGEMEEN PRINCIPE
GENERAL PRINCIPE
GENERAL PRINCIPLE
ALLGEMEIN PRINZIP
GENERAL PRONCIPIO



A

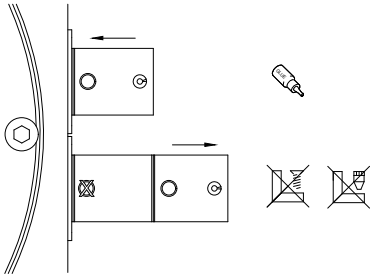

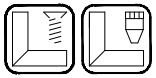

B

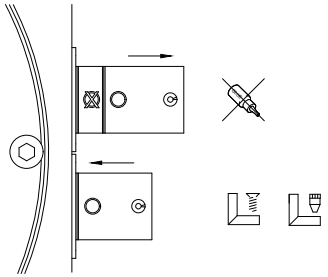



A + B

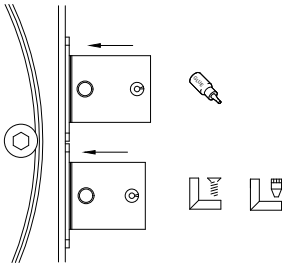

CORNER SCREW MFPT

GLUE INJECTION + CORNER CONNECTION 197.D800.00 | 097.0183.00

MASTERLINE 8-Fu

A

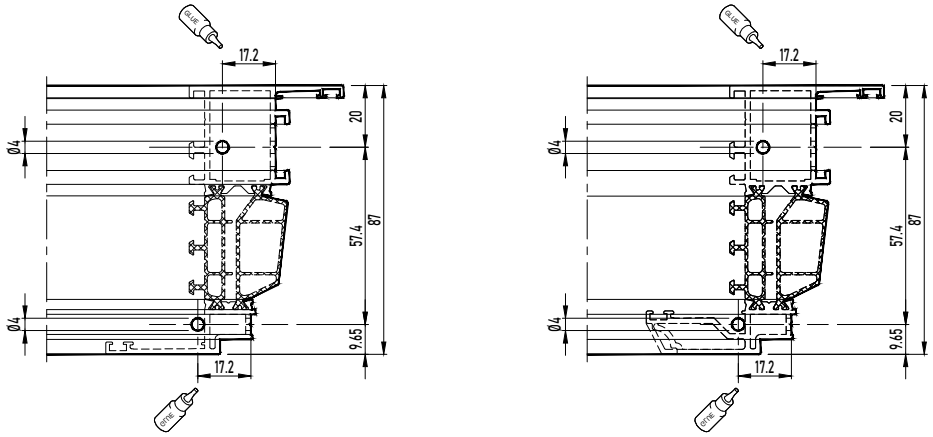

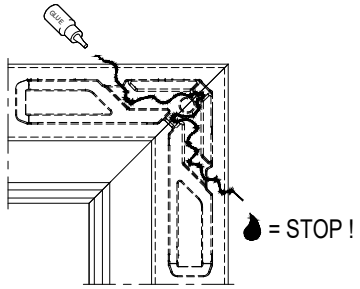



REYNASEAL DUO
REYNASEAL DUO
REYNASEAL DUO
REYNASEAL DUO

LIJMINJECTIE NA VERBINDING
INJECTION DE COLLE APRÈS LA CONNEXION
GLUE INJECTION AFTER CONNECTION
KLEBEINJEKTION NACH DEM ANSCHLUSS

B

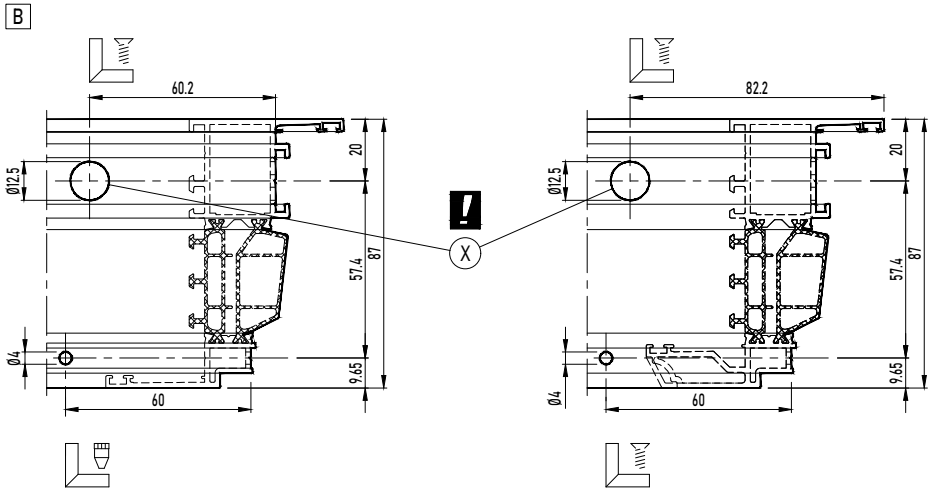

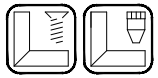

Aanpassing diameter: zie handleiding 197.B700.00 / Modification diamètre: voir manuel 197.B700.00
Change size diameter: see manual 197.B700.00 / Wechsel Durchmesser: siehe Gebrauchsanweisung 197.B700.00

X
DICHTINGSMIDDEL
MATIERE D'ETANCHEITE
SEALING AGENT
ABDICHTUNG
SELLANTE
MASA USZCZELNIAJACA

LIJMINJECTIE NA VERBINDING
INJECTION DE COLLE APRÈS LA CONNEXION
GLUE INJECTION AFTER CONNECTION
KLEBEINJEKTION NACH DEM ANSCHLUSS



CORNER SCREW MFPT

GLUE INJECTION + CORNER CONNECTION 197.D800.00 | 097.0183.00

MASTERLINE 8-Fu

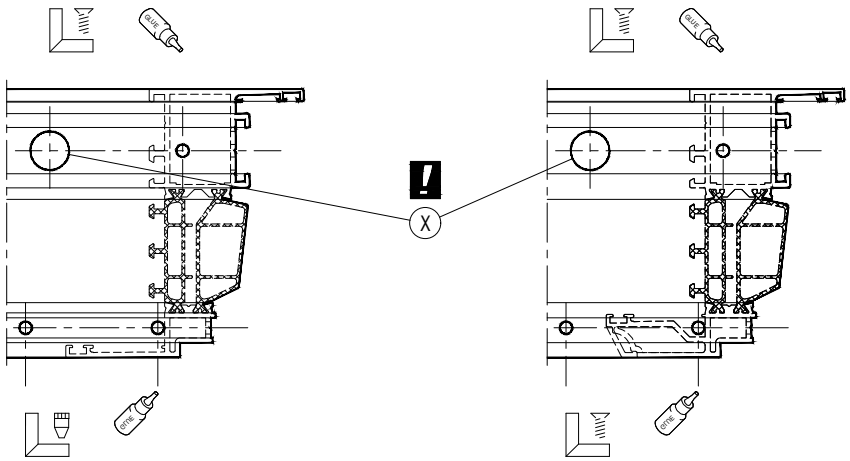

Aanpassing diameter: zie handleiding 197.B600.00
Modification diamètre: voir manuel 197.B600.00
Change size diameter: see manual 197.B600.00
Wechsel Durchmesser: siehe Gebrauchsanweisung 197.B600.00

MONTAGEVOLGORDE L'ORDRE DE MONTAGE THE ORDER OF ASSEMBLY MONTAGEREIHENFOLGE ORDEN DE MONTAJE KOLEJNOSC MONTAZU	1 2 3 .

X	DICHTINGSMIDDEL MATIERE D'ETANCHEITE SEALING AGENT ABDICHTUNG SELLANTE MASA USZCZELNIAJACA

LIJMINJECTIE NA VERBINDING
INJECTION DE COLLE APRÈS LA CONNEXION
GLUE INJECTION AFTER CONNECTION
KLEBEINJEKTION NACH DEM ANSCHLUSS

CORNER SCREW MFPT

GLUE INJECTION + CORNER CONNECTION 197.D800.00 | 097.0183.00

MASTERLINE 8-Fu

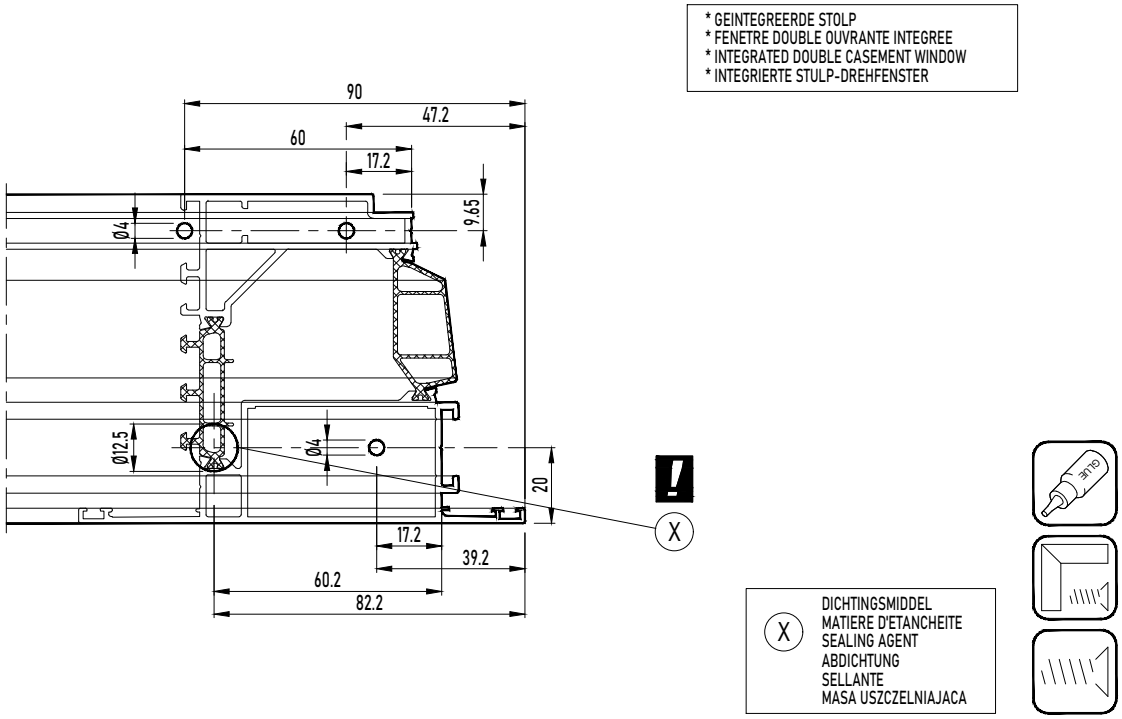

CORNER SCREW MFPT

GLUE INJECTION + CORNER CONNECTION 197.D800.00 | 097.0183.00

MASTERLINE 8-Fu

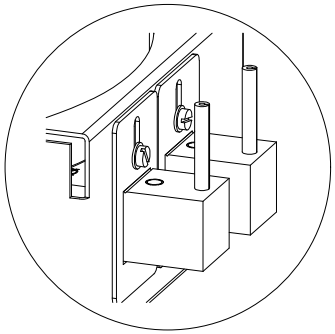

ALGEMEEN PRINCIPE
GENERAL PRINCIPE
GENERAL PRINCIPLE
ALLGEMEIN PRINZIP
GENERAL PRONCIPIO



A

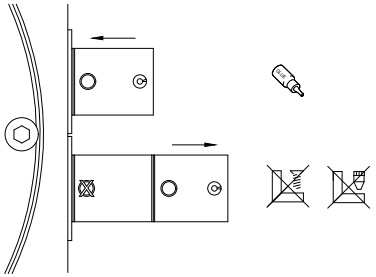

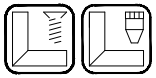

B

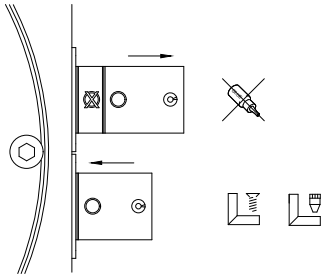



A + B

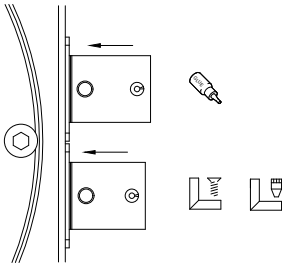

CORNER SCREW MFPT

GLUE INJECTION + CORNER CONNECTION 197.D800.00 | 097.0183.00

MASTERLINE 8-Fu

A

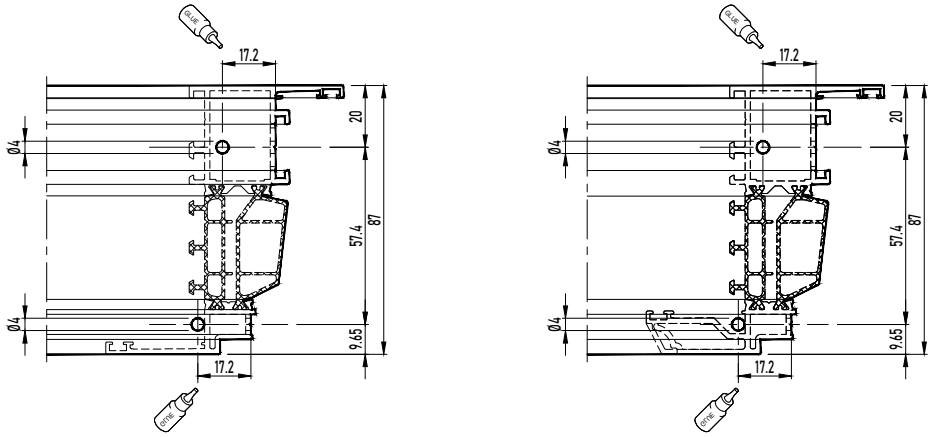

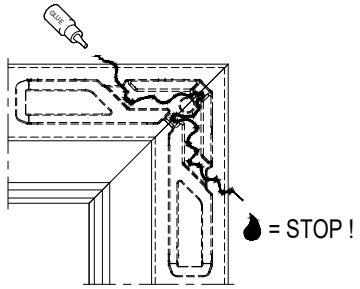



REYNASEAL DUO
REYNASEAL DUO
REYNASEAL DUO
REYNASEAL DUO

LIJMINJECTIE NA VERBINDING
INJECTION DE COLLE APRÈS LA CONNEXION
GLUE INJECTION AFTER CONNECTION
KLEBEINJEKTION NACH DEM ANSCHLUSS

B

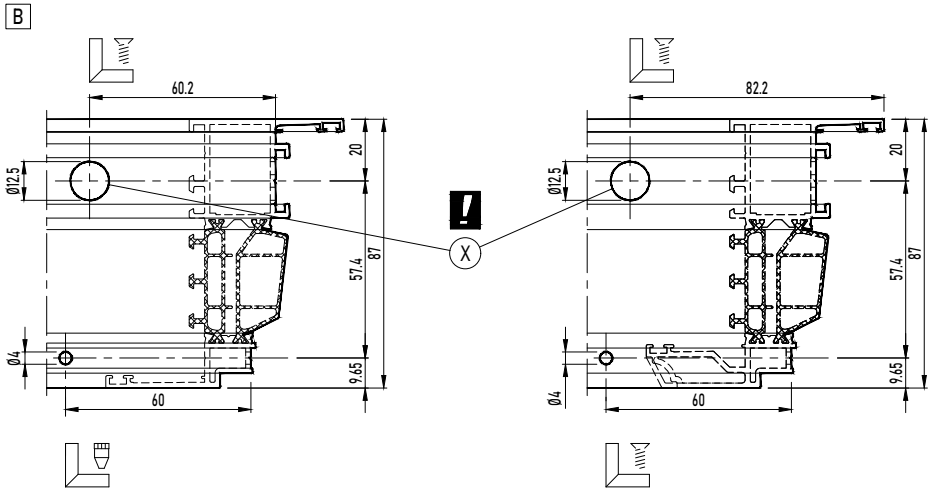

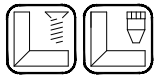

DICHTINGSMIDDEL
MATIERE D'ETANCHEITE
SEALING AGENT
ABDICHTUNG
SELLANTE
MASA USZCZELNIAJACA

LIJMINJECTIE NA VERBINDING
INJECTION DE COLLE APRÈS LA CONNEXION
GLUE INJECTION AFTER CONNECTION
KLEBEINJEKTION NACH DEM ANSCHLUSS



Aanpassing diameter: zie handleiding 197.B700.00 / Modification diamètre: voir manuel 197.B700.00
Change size diameter: see manual 197.B700.00 / Wechsel Durchmesser: siehe Gebrauchsanweisung 197.B700.00

CORNER SCREW MFPT

GLUE INJECTION + CORNER CONNECTION 197.D800.00 | 097.0183.00

MASTERLINE 8-Fu

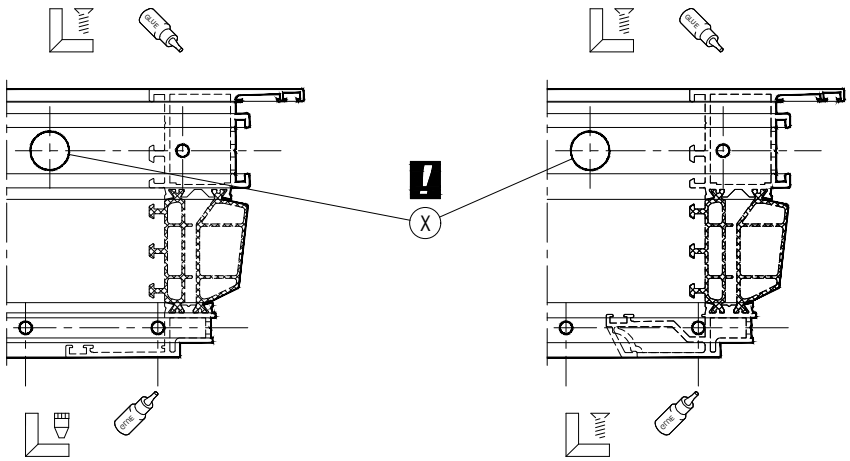

Aanpassing diameter: zie handleiding 197.B600.00
Modification diamètre: voir manuel 197.B600.00
Change size diameter: see manual 197.B600.00
Wechsel Durchmesser: siehe Gebrauchsanweisung 197.B600.00

MONTAGEVOLGORDE L'ORDRE DE MONTAGE THE ORDER OF ASSEMBLY MONTAGEREIHENFOLGE ORDEN DE MONTAJE KOLEJNOSC MONTAZU	1 2 3 .

X	DICHTINGSMIDDEL MATIERE D'ETANCHEITE SEALING AGENT ABDICHTUNG SELLANTE MASA USZCZELNIAJACA

LIJMINJECTIE NA VERBINDING
INJECTION DE COLLE APRÈS LA CONNEXION
GLUE INJECTION AFTER CONNECTION
KLEBEINJEKTION NACH DEM ANSCHLUSS

CORNER SCREW MFPT

GLUE INJECTION + CORNER CONNECTION 197.F900.00

MASTERLINE 8-Fu

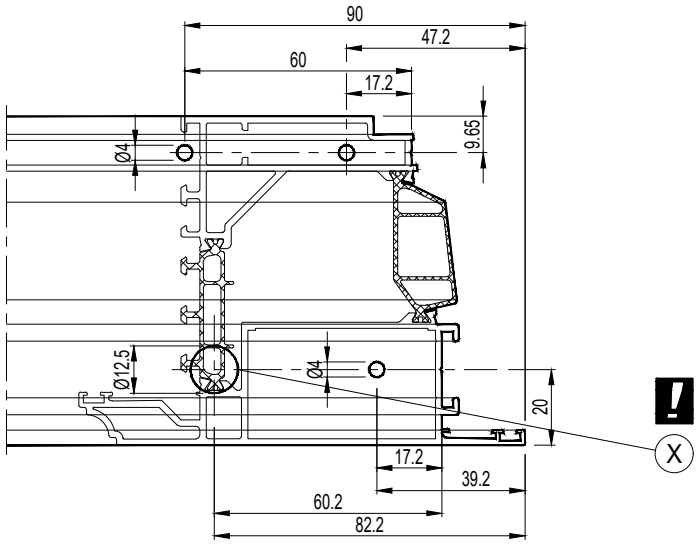

CORNER SCREW MFPT

GLUE INJECTION + CORNER CONNECTION 197.F900.00

MASTERLINE 8-Fu

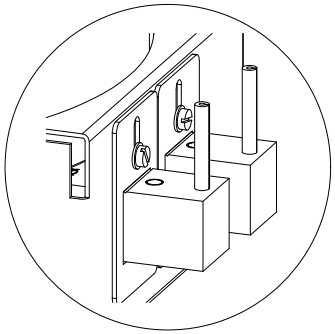

ALGEMEEN PRINCIPE
GENERAL PRINCIPE
GENERAL PRINCIPLE
ALLGEMEIN PRINZIP



A

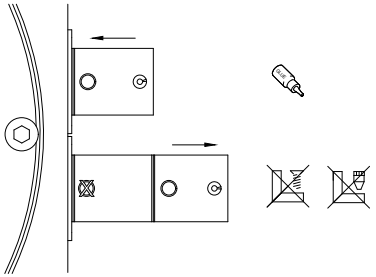

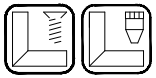

B

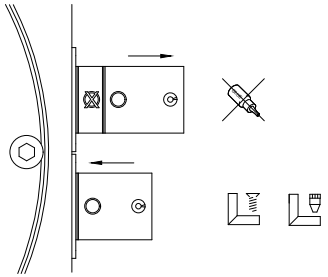



A + B

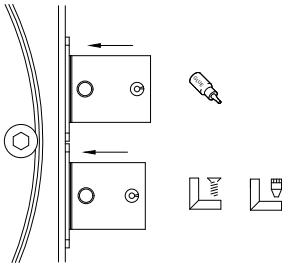

CORNER SCREW MFPT

GLUE INJECTION + CORNER CONNECTION 197.F900.00

MASTERLINE 8-Fu

A

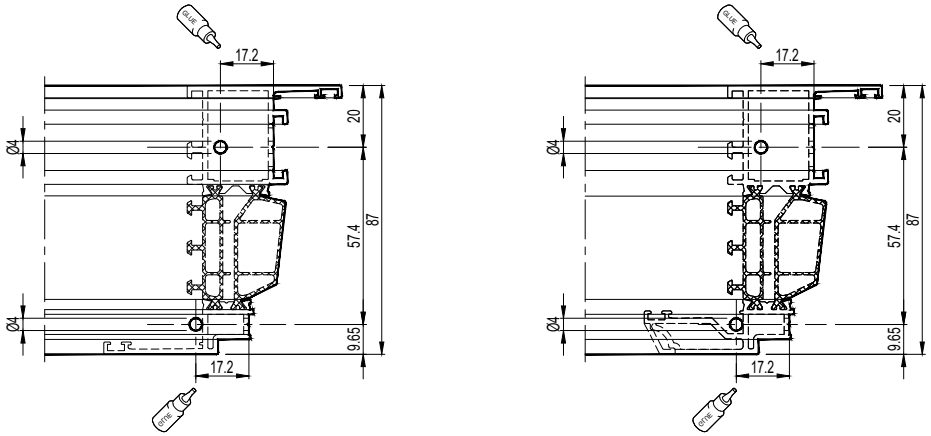

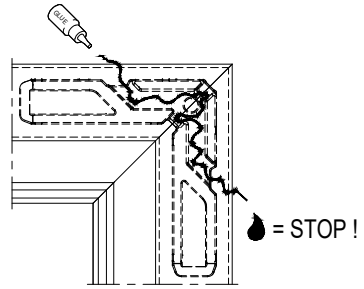

REYNASEAL DUO
REYNASEAL DUO
REYNASEAL DUO
REYNASEAL DUO

LIJMINJECTIE NA VERBINDING
INJECTION DE COLLE APRÈS LA CONNEXION
GLUE INJECTION AFTER CONNECTION
KLEBEINJEKTION NACH DEM ANSCHLUSS

B

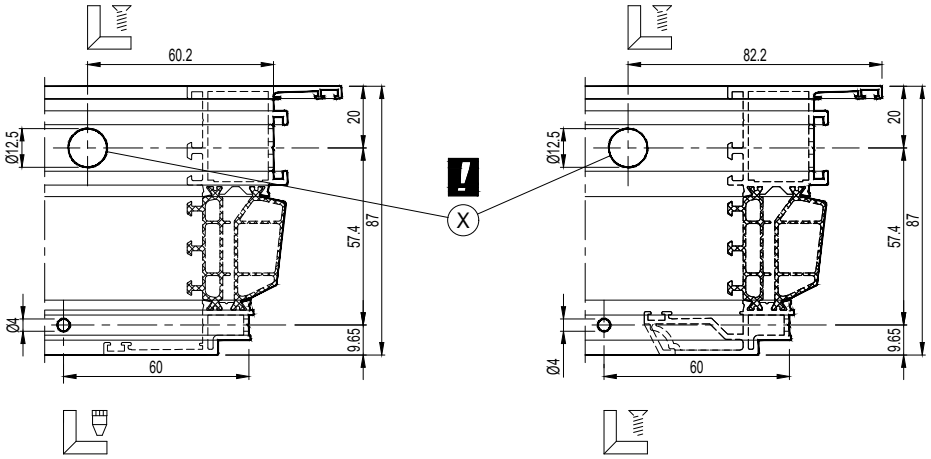

Aanpassing diameter: zie handleiding 197.B700.00 / Modification diamètre: voir manuel 197.B700.00
Change size diameter: see manual 197.B700.00 / Wechsel Durchmesser: siehe Gebrauchsanweisung 197.B700.00

X DICHTINGSMIDDEL
MATIERE D'ETANCHEITE
SEALING AGENT
ABDICHTUNG

LIJMINJECTIE NA VERBINDING
INJECTION DE COLLE APRÈS LA CONNEXION
GLUE INJECTION AFTER CONNECTION
KLEBEINJEKTION NACH DEM ANSCHLUSS

CORNER SCREW MFPT

GLUE INJECTION + CORNER CONNECTION 197.F900.00

MASTERLINE 8-Fu

A + B

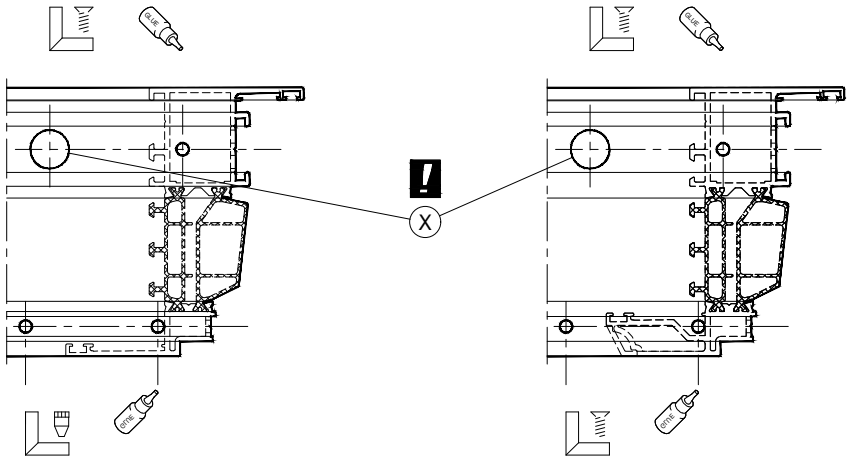



Aanpassing diameter: zie handleiding 197.B600.00
Modification diamètre: voir manuel 197.B600.00
Change size diameter: see manual 197.B600.00
Wechsel Durchmesser: siehe Gebrauchsanweisung 197.B600.00

MONTAGEVOLGORDE
L 'ORDRE DE MONTAGE
THE ORDER OF ASSEMBLY
MONTAGEREIHENFOLGE
1 2 3 .

X DICHTINGSMIDDEL
MATIERE D'ETANCHEITE
SEALING AGENT
ABDICHTUNG

LIJMINJECTIE NA VERBINDING
INJECTION DE COLLE APRÈS LA CONNEXION
GLUE INJECTION AFTER CONNECTION
KLEBEINJEKTION NACH DEM ANSCHLUSS

CORNER SCREW MFPT

GLUE INJECTION + CORNER CONNECTION 197.F900.00 | 097.0183

MASTERLINE 8-Fu

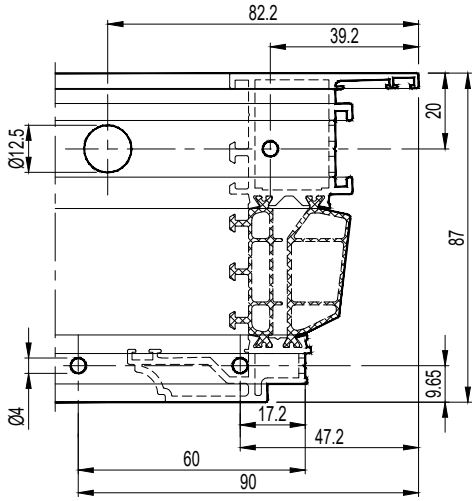

X	DICHTINGSMIDDEL MATIERE D'ETANCHEITE SEALING AGENT ABDICHTUNG

CORNER SCREW MFPT

GLUE INJECTION + CORNER CONNECTION 197.F900.00 | 097.0183

MASTERLINE 8-Fu

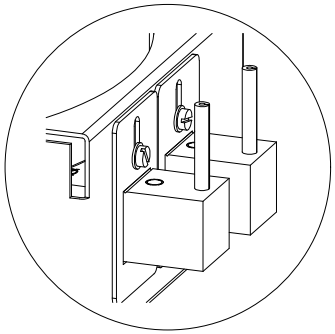

ALGEMEEN PRINCIPE
GENERAL PRINCIPE
GENERAL PRINCIPLE
ALLGEMEIN PRINZIP



A

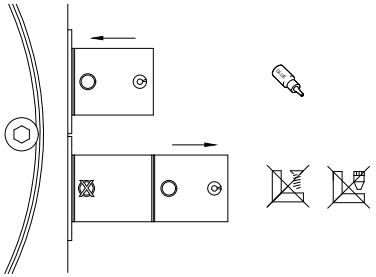

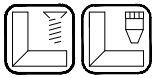

B

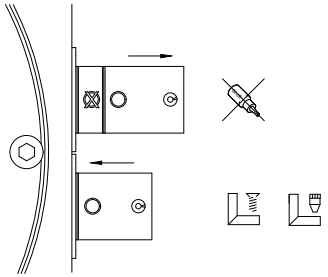



A + B

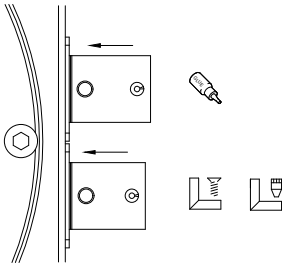

CORNER SCREW MFPT

GLUE INJECTION + CORNER CONNECTION 197.F900.00 | 097.0183

MASTERLINE 8-Fu

A

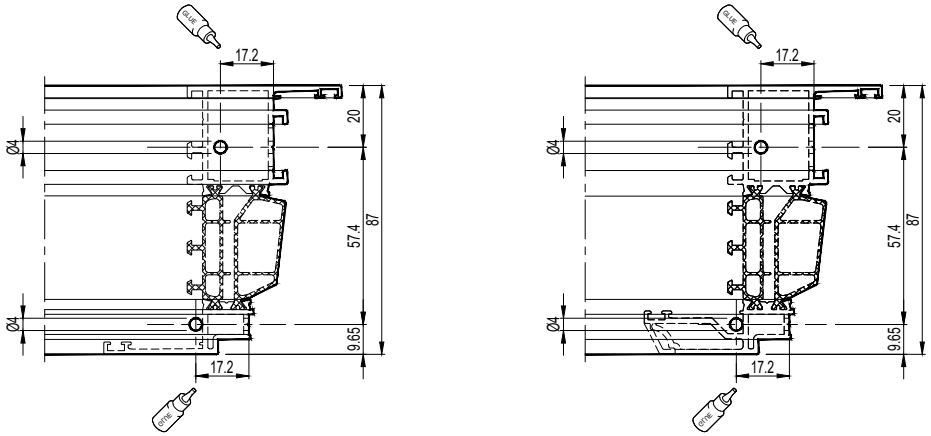



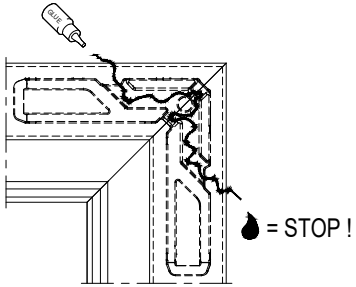

REYNASEAL DUO
REYNASEAL DUO
REYNASEAL DUO
REYNASEAL DUO

LIJMINJECTIE NA VERBINDING
INJECTION DE COLLE APRÈS LA CONNEXION
GLUE INJECTION AFTER CONNECTION
KLEBEINJEKTION NACH DEM ANSCHLUSS

B

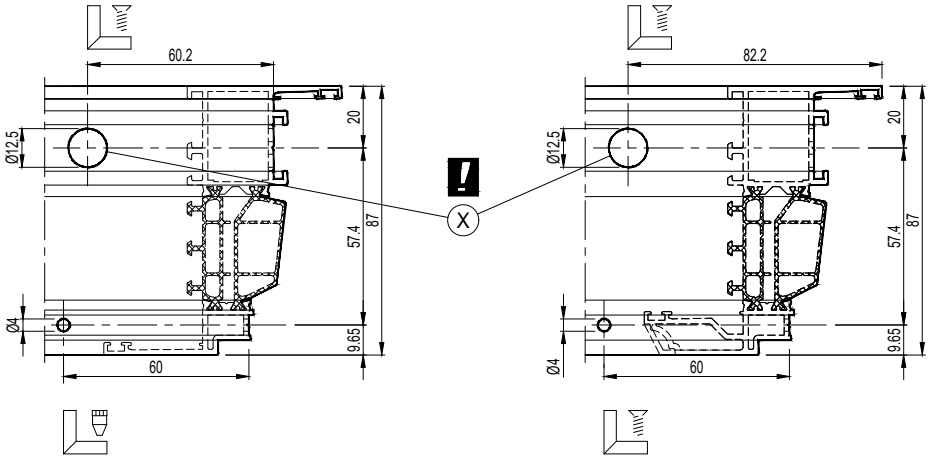

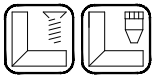

Aanpassing diameter: zie handleiding 197.B700.00 / Modification diamètre: voir manuel 197.B700.00
Change size diameter: see manual 197.B700.00 / Wechsel Durchmesser: siehe Gebrauchsanweisung 197.B700.00

X DICHTINGSMIDDEL
MATIERE D'ETANCHEITE
SEALING AGENT
ABDICHTUNG

LIJMINJECTIE NA VERBINDING
INJECTION DE COLLE APRÈS LA CONNEXION
GLUE INJECTION AFTER CONNECTION
KLEBEINJEKTION NACH DEM ANSCHLUSS



CORNER SCREW MFPT

GLUE INJECTION + CORNER CONNECTION 197.F900.00 | 097.0183

MASTERLINE 8-Fu

A + B

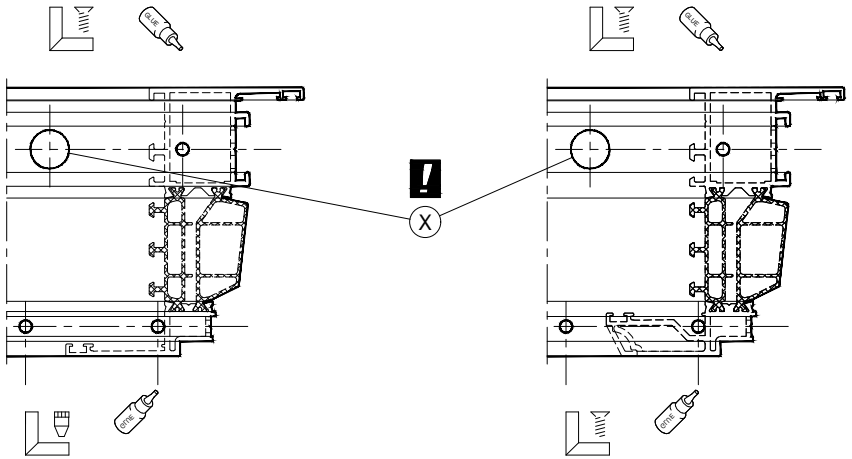



Aanpassing diameter: zie handleiding 197.B600.00
Modification diamètre: voir manuel 197.B600.00
Change size diameter: see manual 197.B600.00
Wechsel Durchmesser: siehe Gebrauchsanweisung 197.B600.00

MONTAGEVOLGORDE L 'ORDRE DE MONTAGE THE ORDER OF ASSEMBLY MONTAGEREIHENFOLGE	1 2 3 .

X	DICHTINGSMIDDEL MATIERE D'ETANCHEITE SEALING AGENT ABDICHTUNG

LIJMINJECTIE NA VERBINDING
INJECTION DE COLLE APRÈS LA CONNEXION
GLUE INJECTION AFTER CONNECTION
KLEBEINJEKTION NACH DEM ANSCHLUSS



CORNER SCREW MFPT

GLUE INJECTION + CORNER CONNECTION 197.D800.00 | 097.0183.00

MASTERLINE 8-Fu

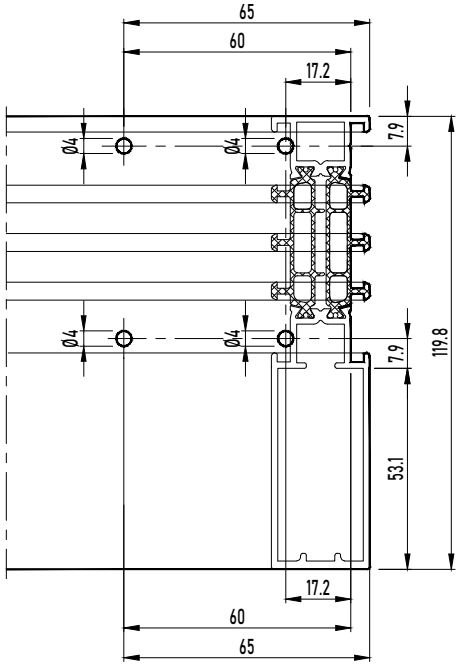

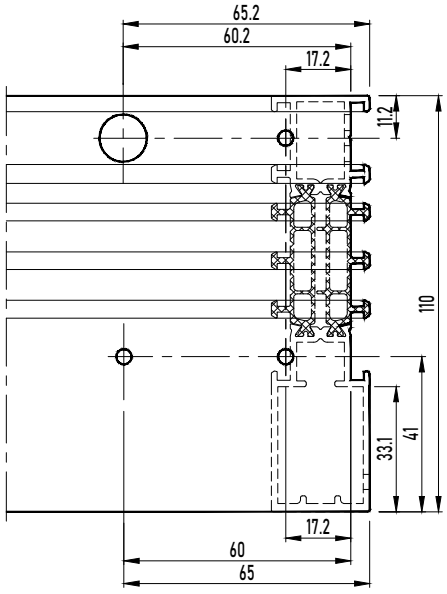

X DICHTINGSMIDDEL
MATIERE D'ETANCHEITE
SEALING AGENT
ABDICHTUNG

CORNER SCREW MFPT

GLUE INJECTION + CORNER CONNECTION 197.D800.00 | 097.0183.00

MASTERLINE 8-Fu

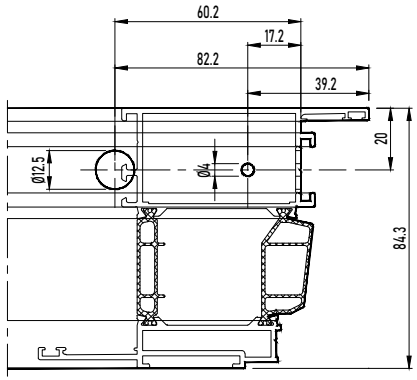

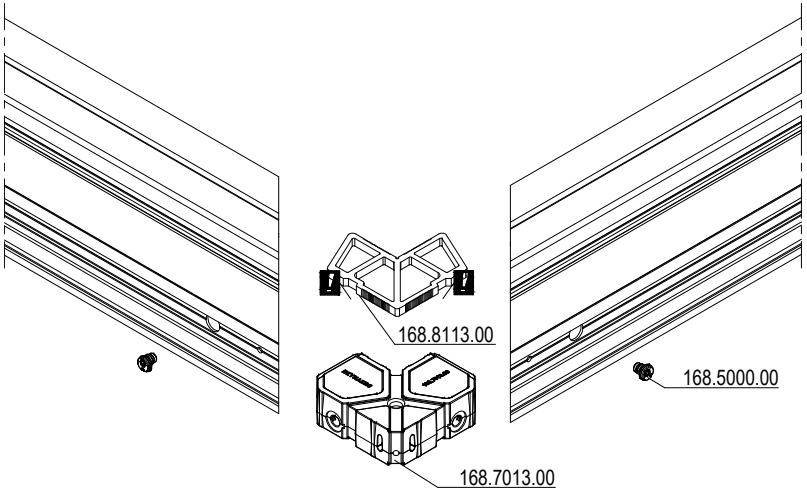



LIJMINJECTIE NA VERBINDING
INJECTION DE COLLE APRÈS LA CONNEXION
GLUE INJECTION AFTER CONNECTION
KLEBEINJEKTION NACH DEM ANSCHLUSS

UITZONDERING: VERLIJMEN IN DE PROFIELKAMER
EXCEPTION: ENCOLLAGE DANS LA CHAMBRE DU PROFILE
EXCEPTION: GLUEING IN THE PROFILE CHAMBER
AUSNAHME: KLEBEREINSATZ IN DIE ECKWINKELKAMmER

DICHTINGSMIDDEL
MATIERE D'ETANCHEITE
SEALING AGENT
ABDICHTUNG

CORNER SCREW MFPT

GLUE INJECTION + CORNER CONNECTION 197.D800.00 | 097.0183.00

MASTERLINE 8-Fu

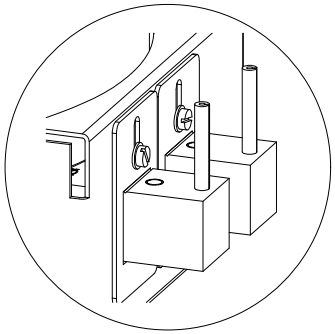

ALGEMEEN PRINCIPE
GENERAL PRINCIPE
GENERAL PRINCIPLE
ALLGEMEIN PRINZIP



A

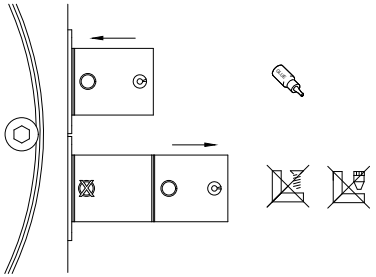

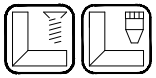

B

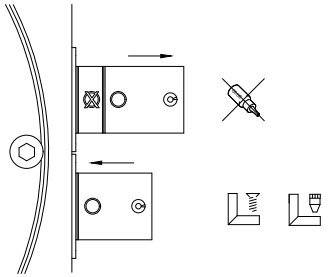



A + B

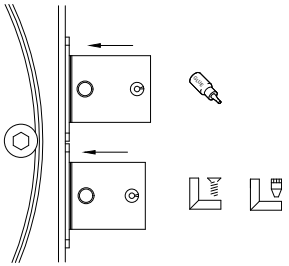

CORNER SCREW MFPT

GLUE INJECTION + CORNER CONNECTION 197.D800.00 | 097.0183.00

MASTERLINE 8-Fu

A

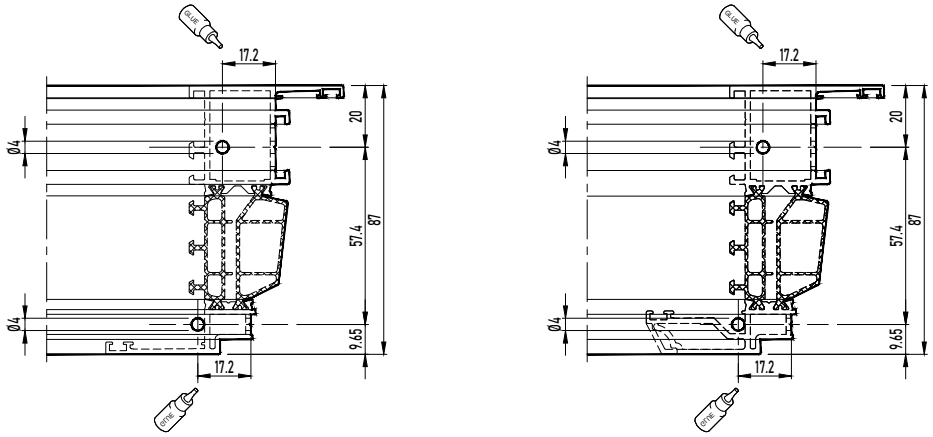

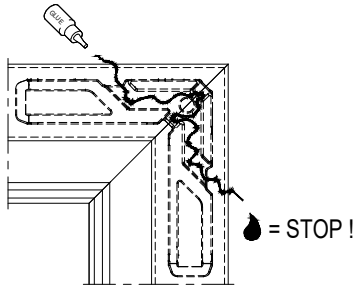



REYNASEAL DUO
REYNASEAL DUO
REYNASEAL DUO
REYNASEAL DUO

LIJMINJECTIE NA VERBINDING
INJECTION DE COLLE APRÈS LA CONNEXION
GLUE INJECTION AFTER CONNECTION
KLEBEINJEKTION NACH DEM ANSCHLUSS

B

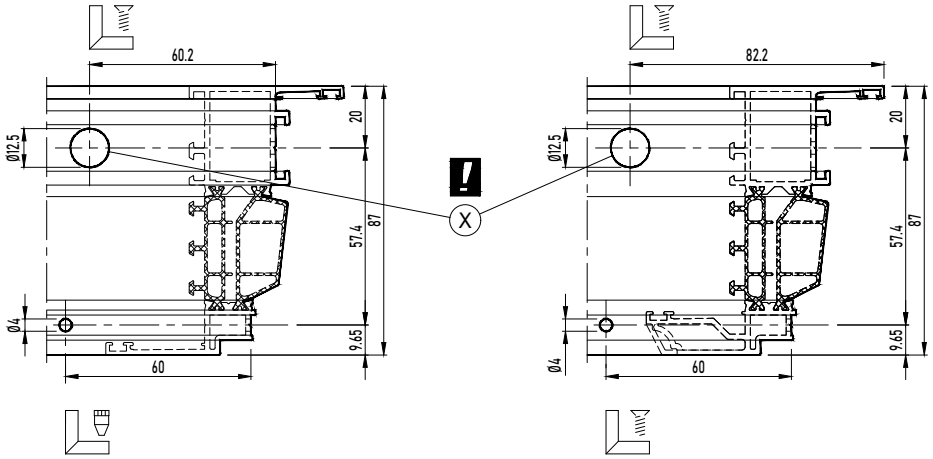

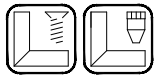

Aanpassing diameter: zie handleiding 197.B700.00 / Modification diamètre: voir manuel 197.B700.00
Change size diameter: see manual 197.B700.00 / Wechsel Durchmesser: siehe Gebrauchsanweisung 197.B700.00

X DICHTINGSMIDDEL
MATIERE D'ETANCHEITE
SEALING AGENT
ABDICHTUNG

LIJMINJECTIE NA VERBINDING
INJECTION DE COLLE APRÈS LA CONNEXION
GLUE INJECTION AFTER CONNECTION
KLEBEINJEKTION NACH DEM ANSCHLUSS



CORNER SCREW MFPT

GLUE INJECTION + CORNER CONNECTION 197.D800.00 | 097.0183.00

MASTERLINE 8-Fu

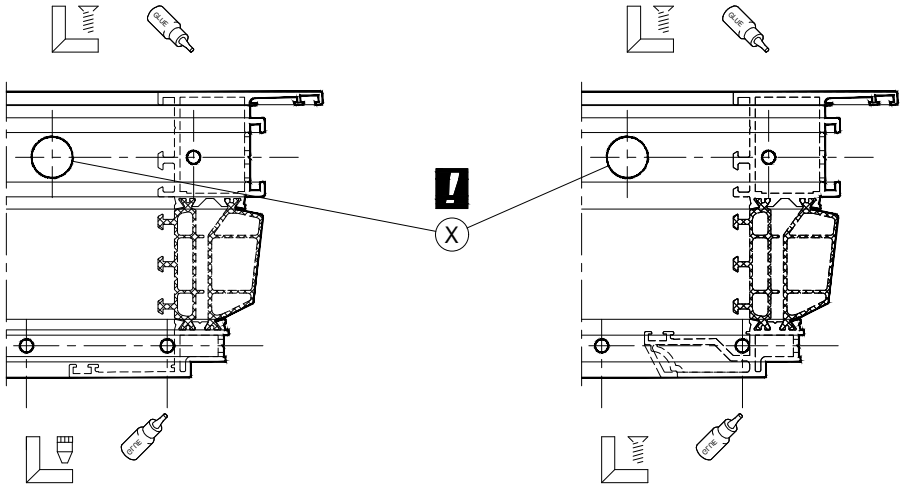

Aanpassing diameter: zie handleiding 197.B600.00
Modification diamètre: voir manuel 197.B600.00
Change size diameter: see manual 197.B600.00
Wechsel Durchmesser: siehe Gebrauchsanweisung 197.B600.00

MONTAGEVOLGORDE L'ORDRE DE MONTAGE THE ORDER OF ASSEMBLY MONTAGEREIHENFOLGE	1 2 3 .

CORNER SCREW MFPT

GLUE INJECTION + CORNER CONNECTION 197.F900.00 | 097.0183.00

MASTERLINE 8-Fu

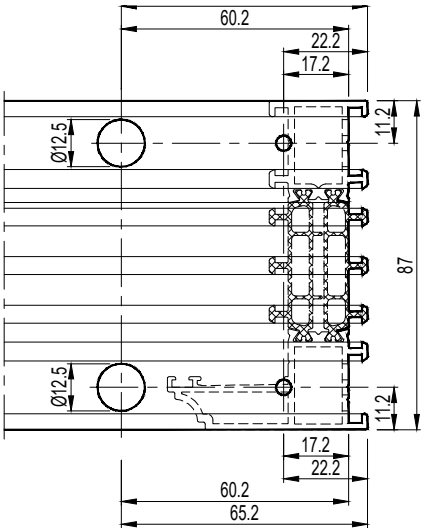

CORNER SCREW MFPT

GLUE INJECTION + CORNER CONNECTION 197.F900.00 | 097.0183.00

MASTERLINE 8-Fu

ALGEMEEN PRINCIPE
GENERAL PRINCIPE
GENERAL PRINCIPLE
ALLGEMEIN PRINZIP

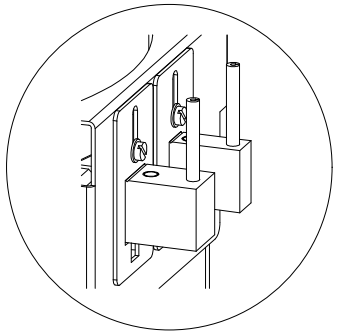

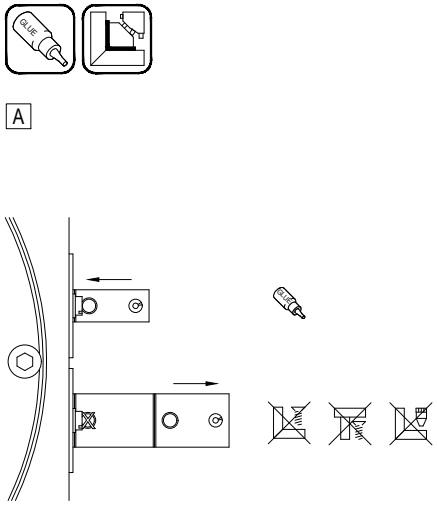

A



B

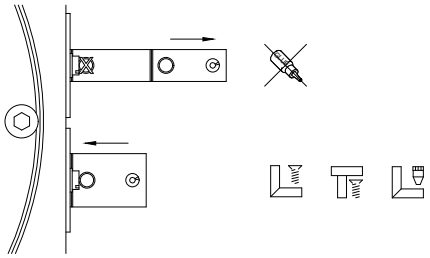

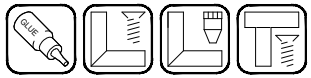

A + B

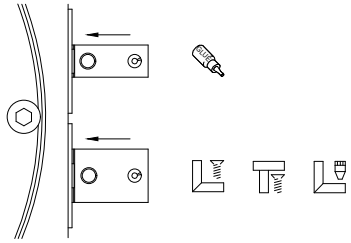

CORNER SCREW MFPT

GLUE INJECTION + CORNER CONNECTION 197.F900.00 | 097.0183.00

MASTERLINE 8-Fu

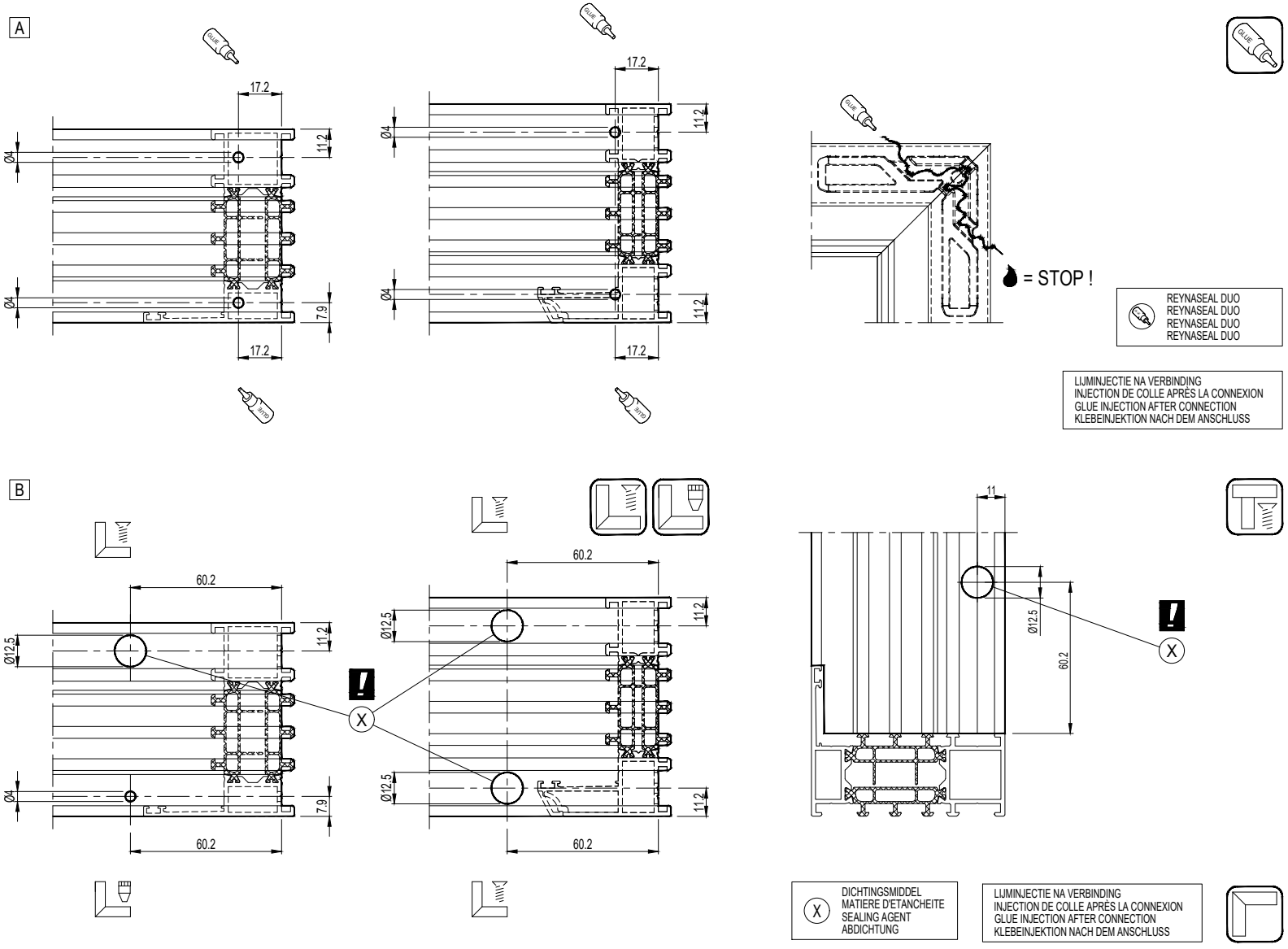

CORNER SCREW MFPT

GLUE INJECTION + CORNER CONNECTION 197.F900.00 | 097.0183.00

MASTERLINE 8-Fu

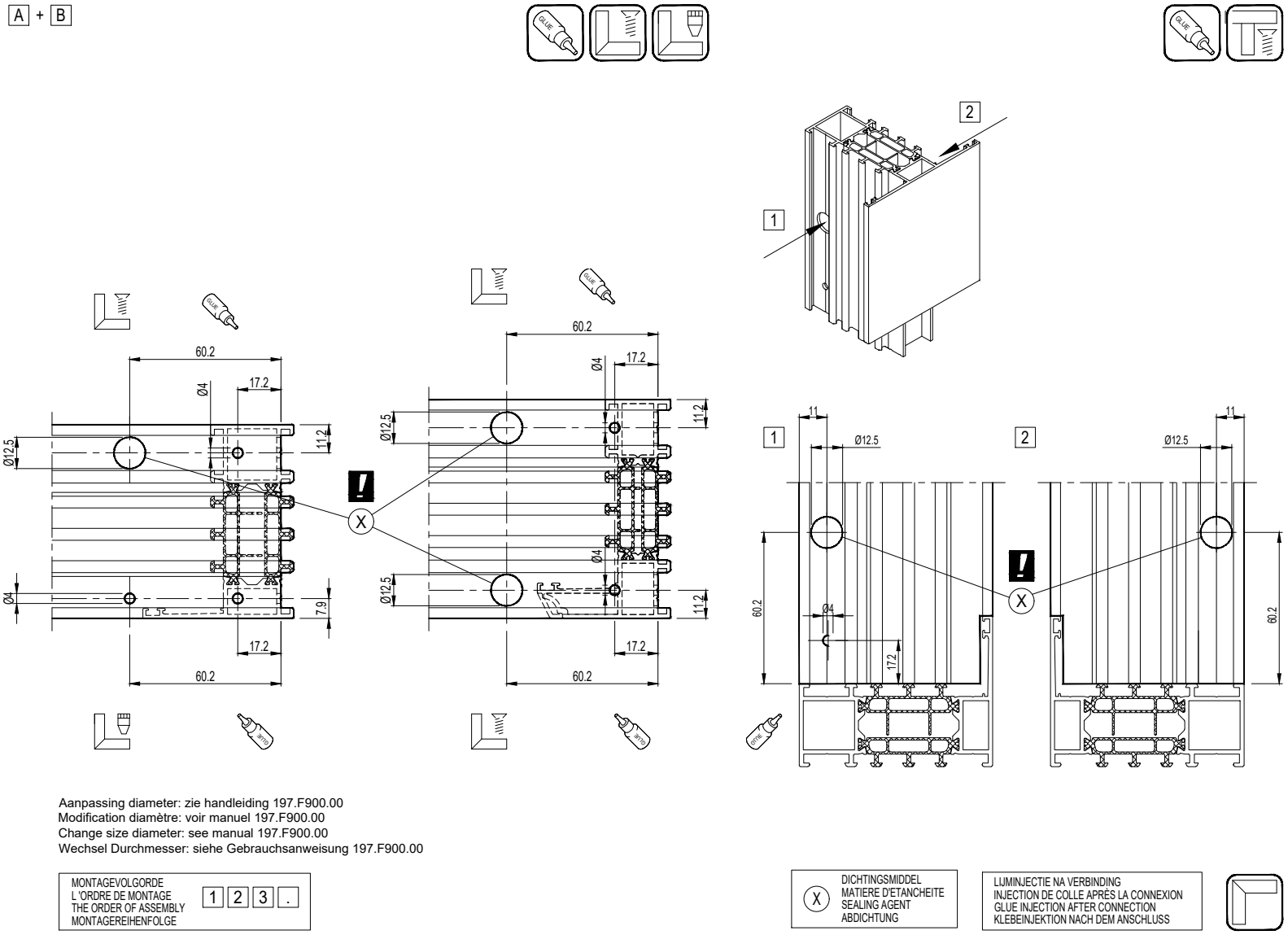

Aanpassing diameter: zie handleiding 197.F900.00
Modification diamètre: voir manuel 197.F900.00
Change size diameter: see manual 197.F900.00
Wechsel Durchmesser: siehe Gebrauchsanweisung 197.F900.00

MONTAGEVOLGORDE L 'ORDRE DE MONTAGE THE ORDER OF ASSEMBLY MONTAGEREIHENFOLGE	1 2 3 .

X	DICHTINGSMIDDEL MATIERE D'ETANCHEITE SEALING AGENT ABDICHTUNG

LIJMINJECTIE NA VERBINDING
INJECTION DE COLLE APRÈS LA CONNEXION
GLUE INJECTION AFTER CONNECTION
KLEBEINJEKTION NACH DEM ANSCHLUSS

CORNER SCREW MFPT

GLUE INJECTION + CORNER CONNECTION 197.F900.00 | 097.0183.00

MASTERLINE 8-Fu

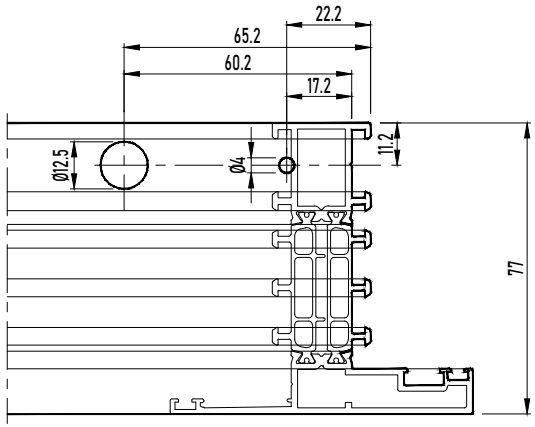

CORNER SCREW MFPT

GLUE INJECTION + CORNER CONNECTION 197.F900.00 | 097.0183.00

MASTERLINE 8-Fu

ALGEMEEN PRINCIPE
GENERAL PRINCIPE
GENERAL PRINCIPLE
ALLGEMEIN PRINZIP

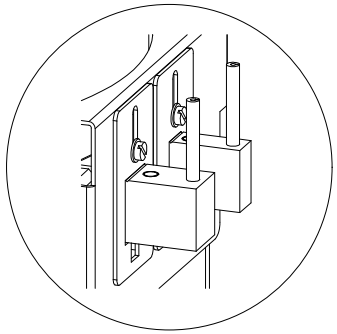



A



B

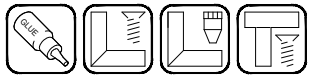

A + B

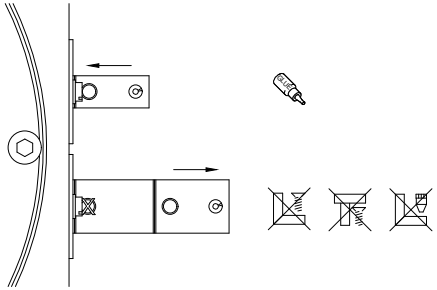

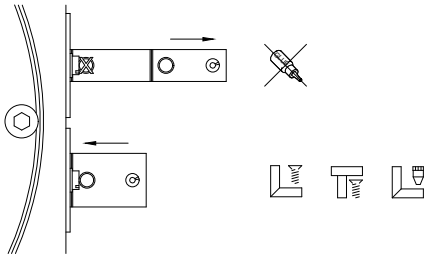

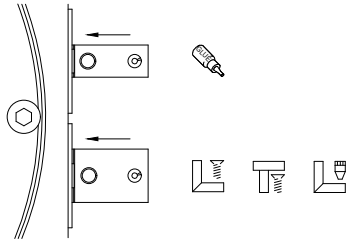

CORNER SCREW MFPT

GLUE INJECTION + CORNER CONNECTION 197.F900.00 | 097.0183.00

MASTERLINE 8-Fu

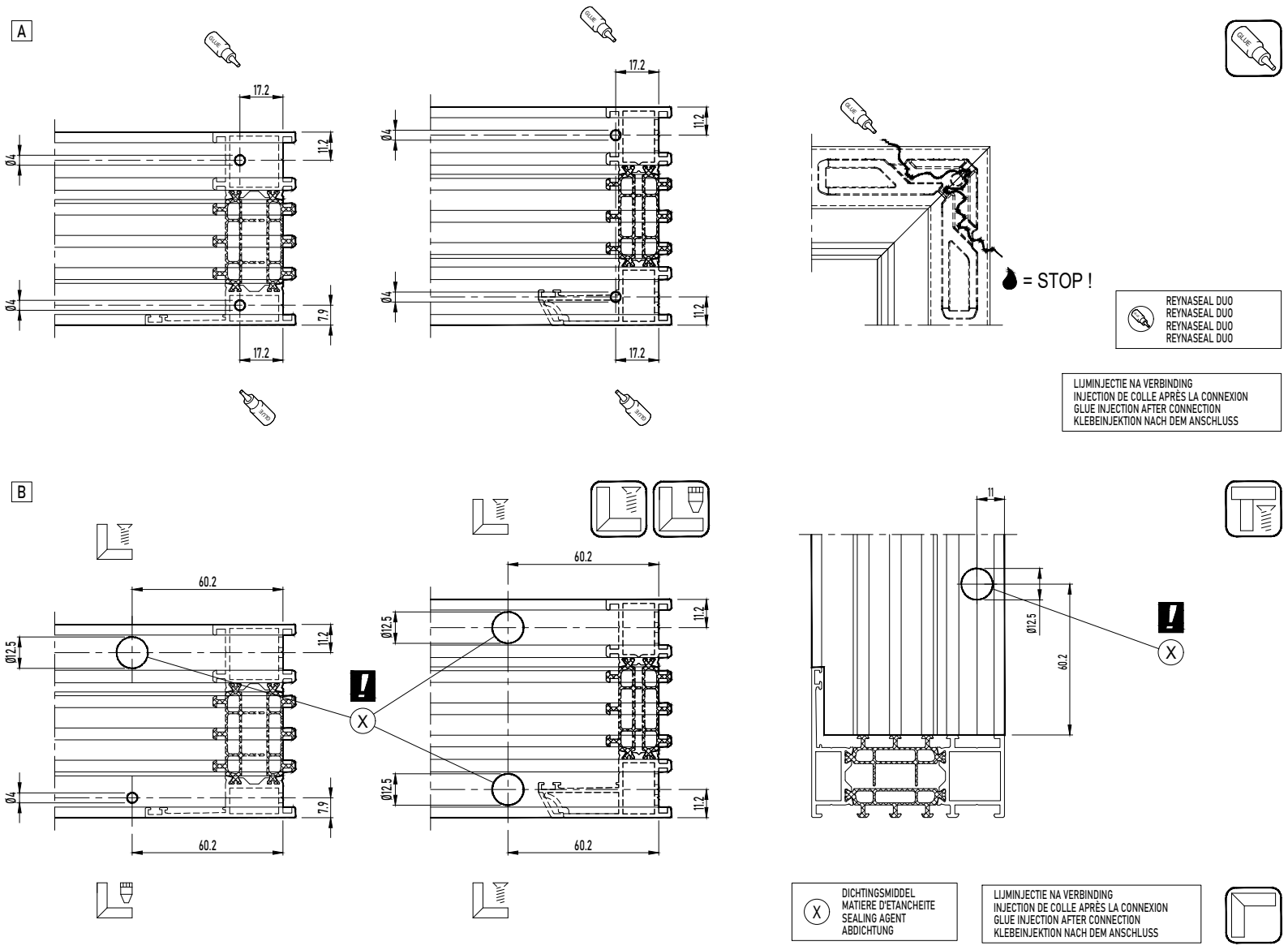

CORNER SCREW MFPT

GLUE INJECTION + CORNER CONNECTION 197.F900.00 | 097.0183.00

MASTERLINE 8-Fu

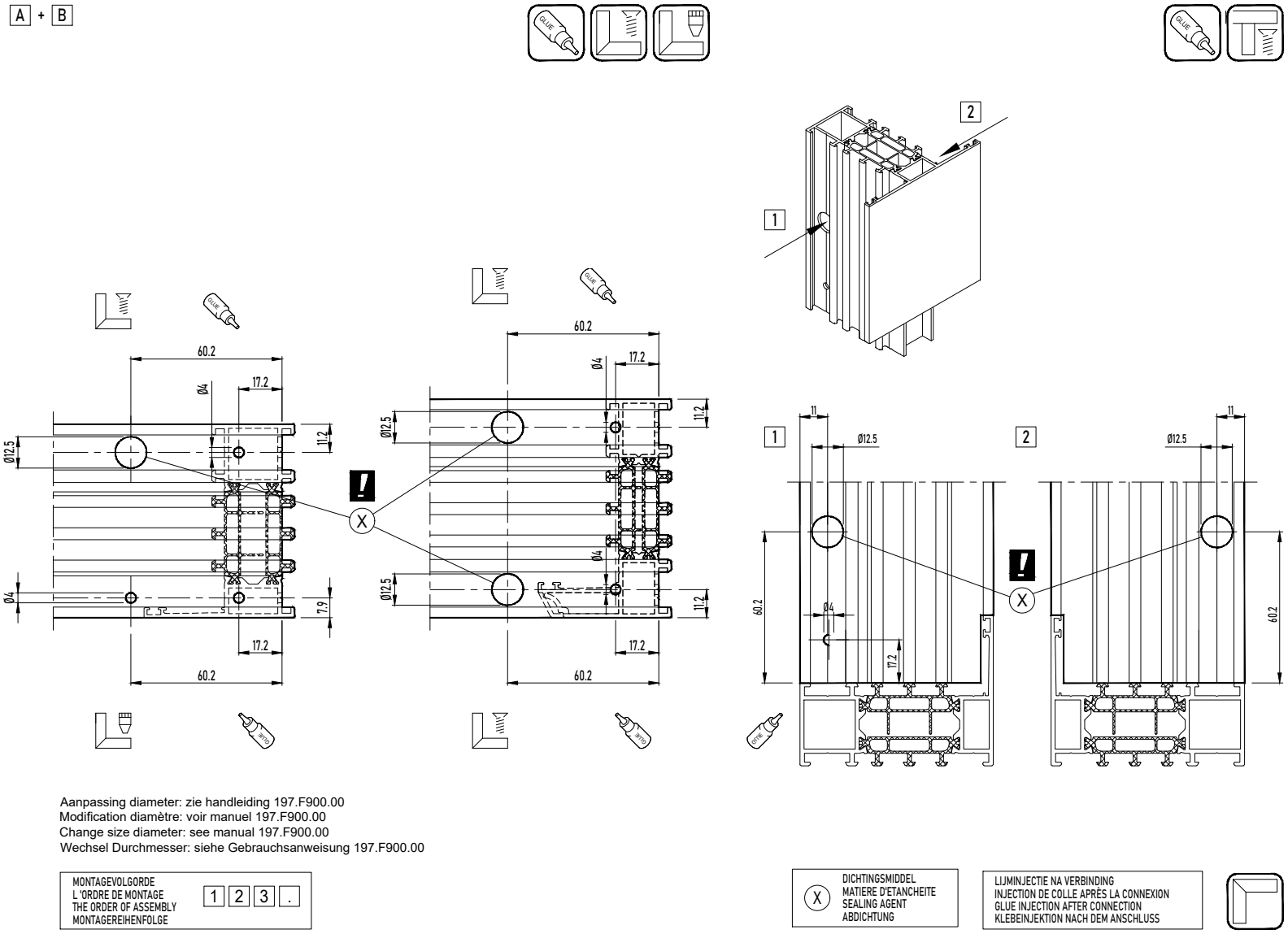

Aanpassing diameter: zie handleiding 197.F900.00
Modification diamètre: voir manuel 197.F900.00
Change size diameter: see manual 197.F900.00
Wechsel Durchmesser: siehe Gebrauchsanweisung 197.F900.00

MONTAGEVOLGORDE L 'ORDRE DE MONTAGE THE ORDER OF ASSEMBLY MONTAGEREIHENFOLGE	1 2 3 .

X	DICHTINGSMIDDEL MATIERE D'ETANCHEITE SEALING AGENT ABDICHTUNG

LIJMINJECTIE NA VERBINDING
INJECTION DE COLLE APRÈS LA CONNEXION
GLUE INJECTION AFTER CONNECTION
KLEBEINJEKTION NACH DEM ANSCHLUSS

CORNER SCREW MFPT

GLUE INJECTION + CORNER CONNECTION 197.D600.00 | 097.0183.00

MASTERLINE 8-Fu

!	169.9496.04 MOETEN SAMEN WORDEN GEÏNSTALLERD MET 068.7798.04 OF 168.7073.00 169.9496.04 DOIT ÊTRE INSTALLÉ ENSEMBLE AVEC 168.7088.00 OU 168.7073.00 169.9496.04 MUST BE INSTALLED TOGETHER WITH 168.7088.00 OR 168.7073.00 169.9496.04 MUSS ZUSAMMEN MIT 168.7088.00 ODER 168.7073.00 INSTALLIERT WERDEN
!	ENKEL BIJ 408.0094.XX EN 408.0096.XX SEULEMENT POUR 408.0094.XX ET 408.0096.XX ONLY FOR 408.0094.XX AND 408.0096.XX NUR BEI 408.0094.XX UND 408.0096.XX

LIJMINJECTIE NA VERBINDING INJECTION DE COLLE APRÈS LA CONNEXION GLUE INJECTION AFTER CONNECTION KLEBEINJEKTION NACH DEM ANSCHLUSS	X DICHTINGSMIDDEL MATIERE D'ETANCHEITE SEALING AGENT ABDICHTUNG



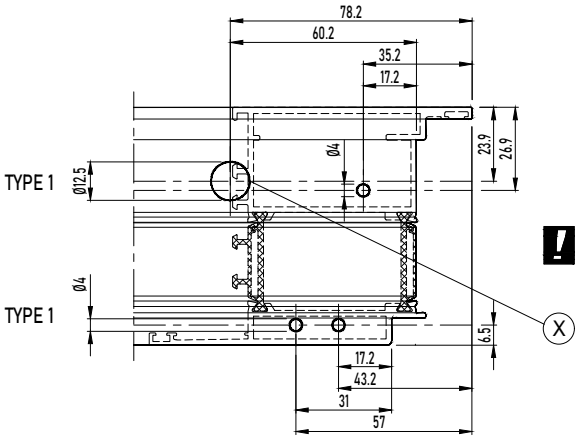

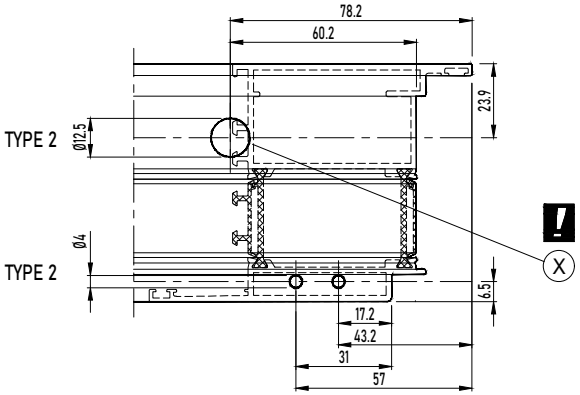

CORNER SCREW MFPT

GLUE INJECTION + CORNER CONNECTION 197.D600.00 | 097.0183.00

MASTERLINE 8-Fu

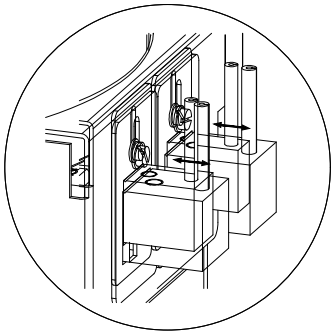

ALGEMEEN PRINCIPE
GENERAL PRINCIPE
GENERAL PRINCIPLE
GENERAL PRINCIPLE
ALLGEMEIN PRINZIP



A

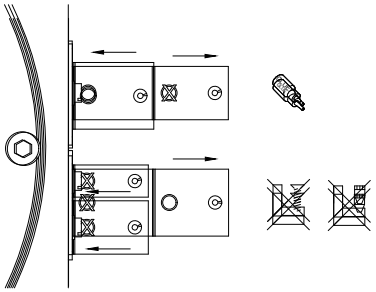





B

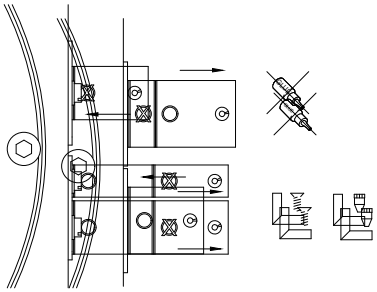

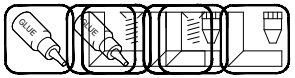

A + B

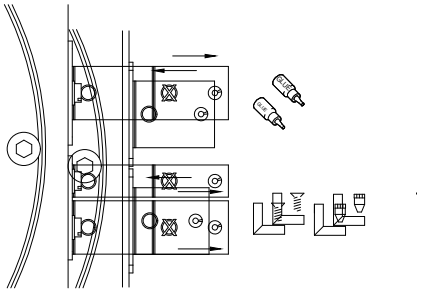

CORNER SCREW MFPT

GLUE INJECTION + CORNER CONNECTION 197.D600.00 | 097.0183.00

MASTERLINE 8-Fu

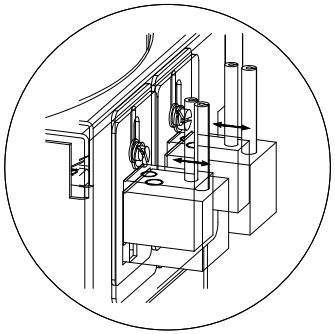

ALGEMEEN PRINCIPE
GENERAL PRINCIPE
GENERAL PRINCIPLE
ALLGEMEIN PRINZIP



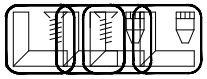

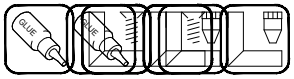

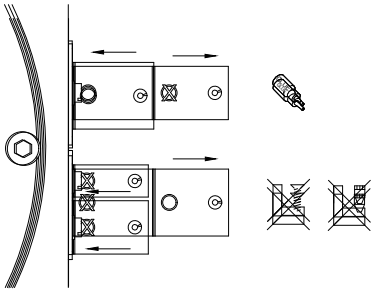

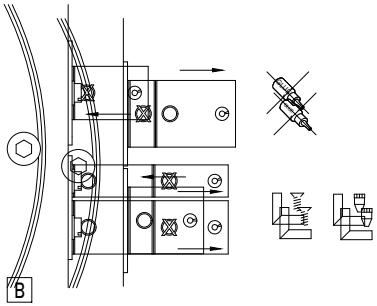

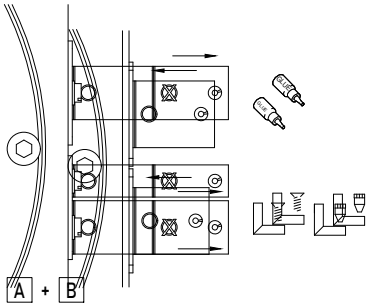



CORNER SCREW MFPT

GLUE INJECTION + CORNER CONNECTION 197.D600.00 | 097.0183.00

MASTERLINE 8-Fu

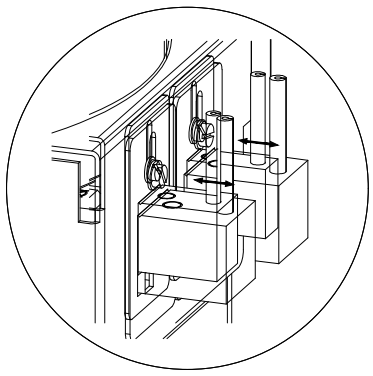

ALGEMEEN PRINCIPE
GENERAL PRINCIPE
GENERAL PRINCIPLE
ALLGEMEIN PRINZIP

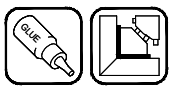

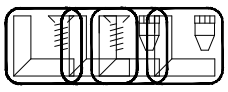

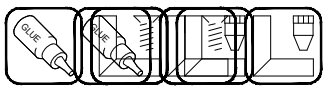

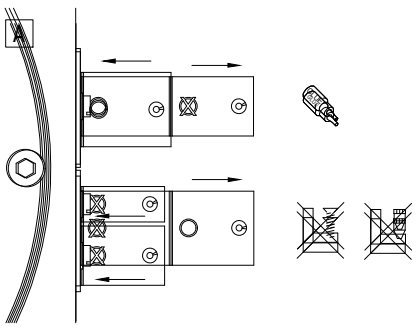

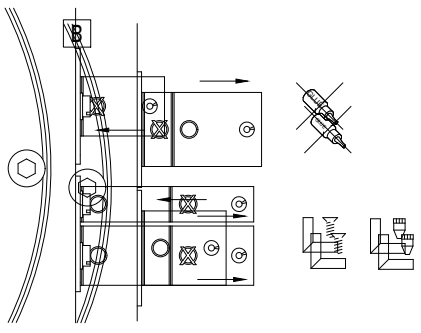

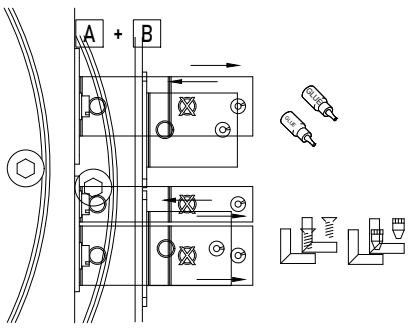



CORNER SCREW MFPT

GLUE INJECTION + CORNER CONNECTION 197.D600.00 | 097.0183.00

MASTERLINE 8-Fu

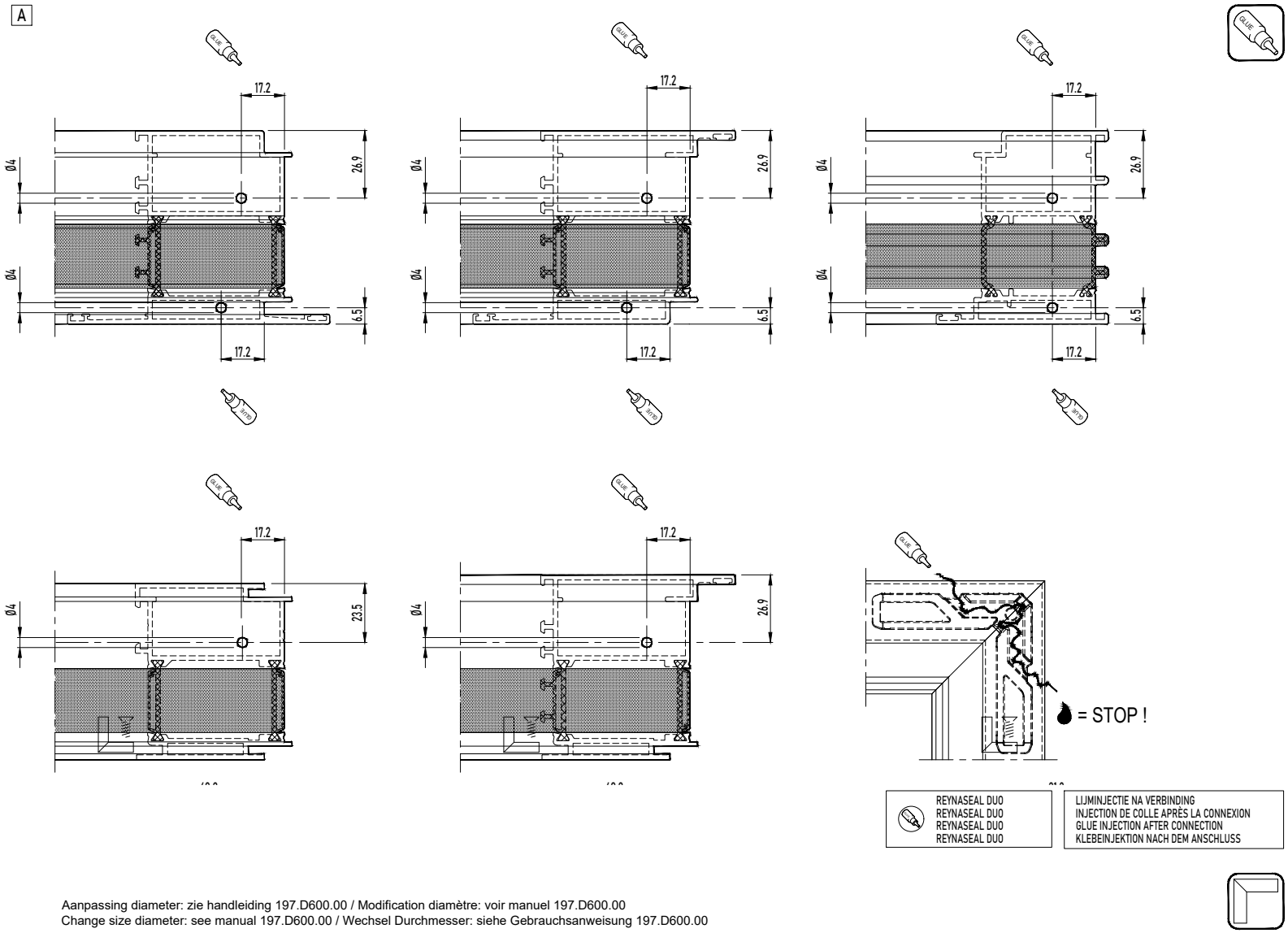

Aanpassing diameter: zie handleiding 197.D600.00 / Modification diamètre: voir manuel 197.D600.00
Change size diameter: see manual 197.D600.00 / Wechsel Durchmesser: siehe Gebrauchsanweisung 197.D600.00

CORNER SCREW MFPT

GLUE INJECTION + CORNER CONNECTION 197.D600.00 | 097.0183.00

MASTERLINE 8-Fu

B

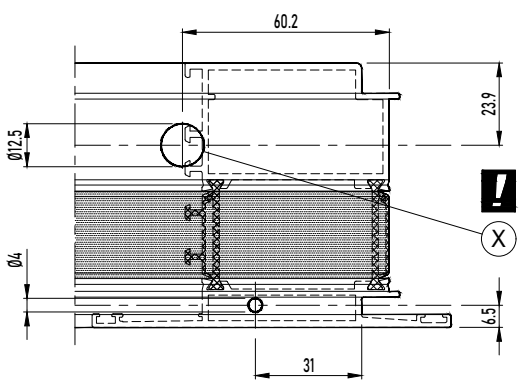

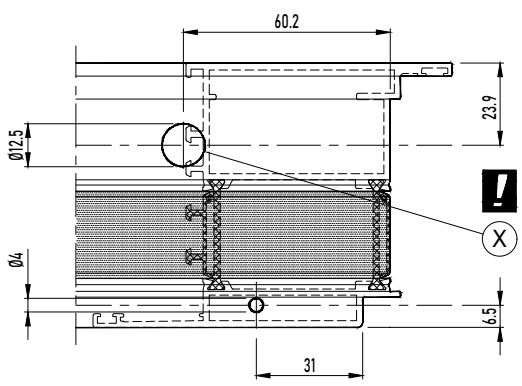

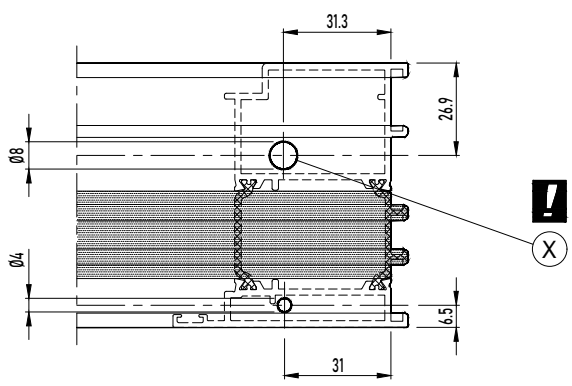

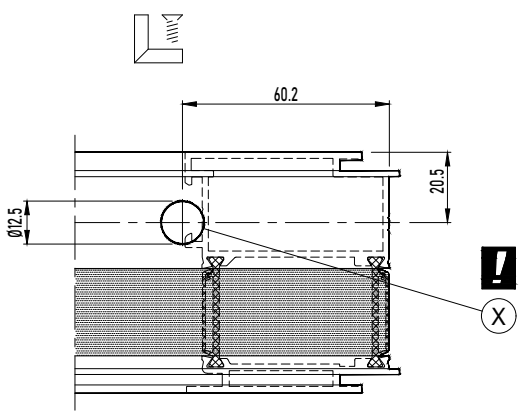

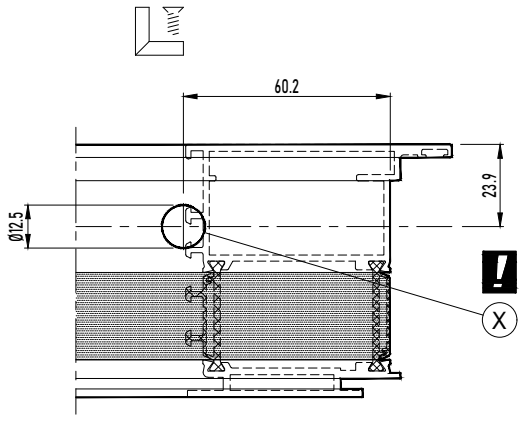

LIJMINJECTIE VOOR VERBINDING
INJECTION DE COLLE AVANT LA CONNEXION
GLUE INJECTION BEFORE CONNECTION
KLEBEINJEKTION VOR ANSCHLUSS

MONTAGEVOLGORDE
L'ORDRE DE MONTAGE
THE ORDER OF ASSEMBLY
MONTAGEREIHENFOLGE
1 2 3 .

X DICHTINGSMIDDEL
MATIERE D'ETANCHEITE
SEALING AGENT
ABDICHTUNG

Aanpassing diameter: zie handleiding 197.D600.00 / Modification diamètre: voir manuel 197.D600.00
Change size diameter: see manual 197.D600.00 / Wechsel Durchmesser: siehe Gebrauchsanweisung 197.D600.00

CORNER SCREW MFPT

GLUE INJECTION + CORNER CONNECTION 197.D600.00 | 097.0183.00

MASTERLINE 8-Fu

A + B

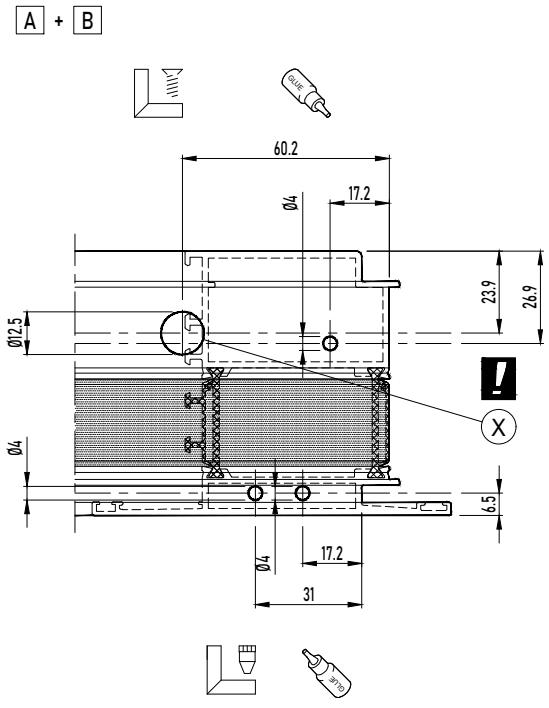

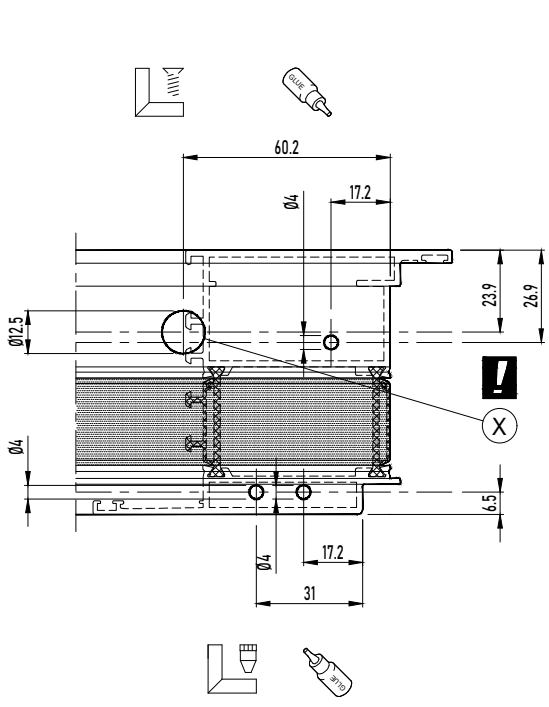

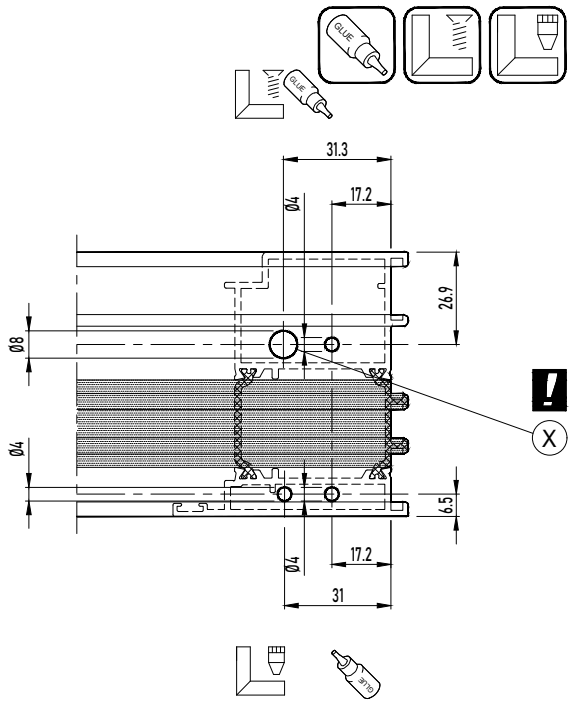

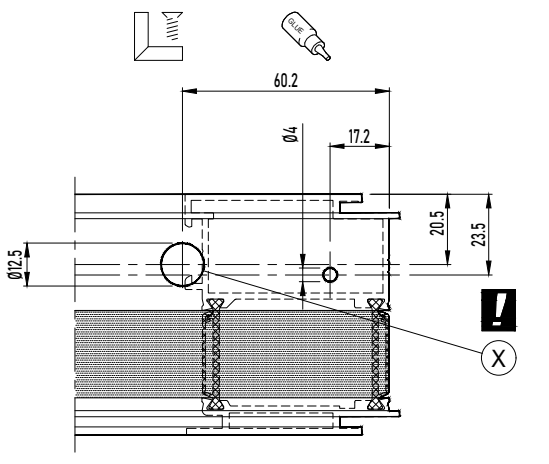

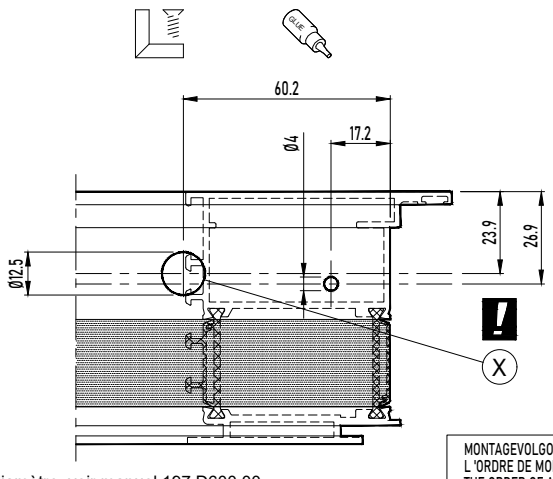

Aanpassing diameter: zie handleiding 197.D600.00 / Modification diamètre: voir manuel 197.D600.00
Change size diameter: see manual 197.D600.00 / Wechsel Durchmesser: siehe Gebrauchsanweisung 197.D600.00

MONTAGEVOLGORDE
L 'ORDRE DE MONTAGE
THE ORDER OF ASSEMBLY
MONTAGEREIHENFOLGE
1 2 3 .

X DICHTINGSMIDDEL
MATIERE D'ETANCHEITE
SEALING AGENT
ABDICHTUNG

LIJMINJECTIE NA VERBINDING
INJECTION DE COLLE APRÈS LA CONNEXION
GLUE INJECTION AFTER CONNECTION
KLEBEINJEKTION NACH DEM ANSCHLUSS

CORNER SCREW MFPT

GLUE INJECTION + CORNER CONNECTION 197.D600.00 | 097.0183.00

MASTERLINE 8-Fu

!	169.9496.04 MOETEN SAMEN WORDEN GEÏNSTALLERD MET 068.7798.04 OF 168.7073.00 169.9496.04 DOIT ÊTRE INSTALLÉ ENSEMBLE AVEC 168.7088.00 OU 168.7073.00 169.9496.04 MUST BE INSTALLED TOGETHER WITH 168.7088.00 OR 168.7073.00 169.9496.04 MUSS ZUSAMMEN MIT 168.7088.00 ODER 168.7073.00 INSTALLIERT WERDEN

!	ENKEL BIJ 408.0094.XX EN 408.0096.XX SEULEMENT POUR 408.0094.XX ET 408.0096.XX ONLY FOR 408.0094.XX AND 408.0096.XX NUR BEI 408.0094.XX UND 408.0096.XX

LIJMINJECTIE NA VERBINDING INJECTION DE COLLE APRÈS LA CONNEXION GLUE INJECTION AFTER CONNECTION KLEBEINJEKTION NACH DEM ANSCHLUSS	(X) DICHTINGSMIDDEL MATIERE D'ETANCHEITE SEALING AGENT ABDICHTUNG



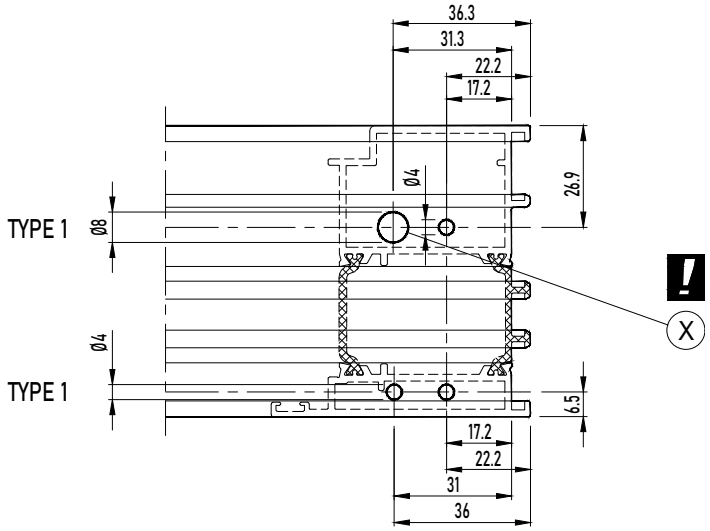

CORNER SCREW MFPT

GLUE INJECTION + CORNER CONNECTION 197.D600.00 | 097.0183.00

MASTERLINE 8-Fu

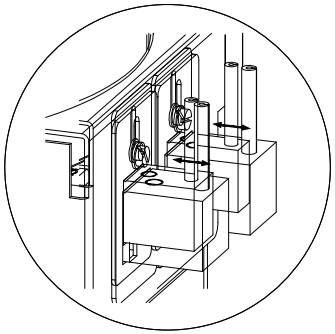

ALGEMEEN PRINCIPE
GENERAL PRINCIPE
GENERAL PRINCIPLE
GENERAL PRINCIPLE
ALLGEMEIN PRINZIP



A

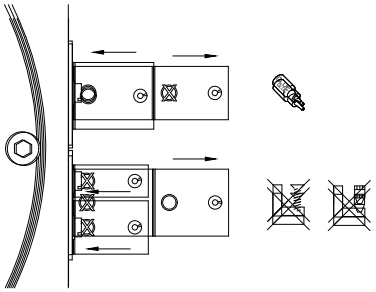





B

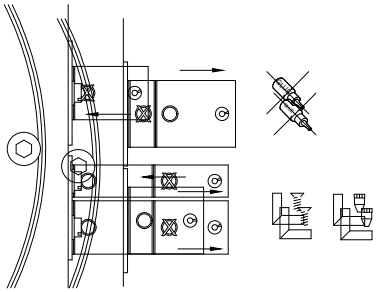

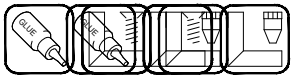

A + B

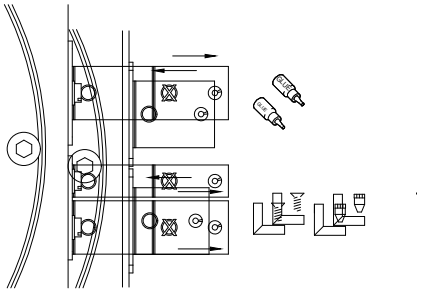

CORNER SCREW MFPT

GLUE INJECTION + CORNER CONNECTION 197.D600.00 | 097.0183.00

MASTERLINE 8-Fu

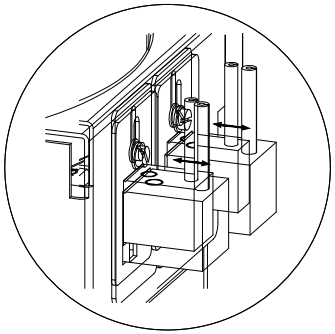

ALGEMEEN PRINCIPE
GENERAL PRINCIPE
GENERAL PRINCIPLE
GENERAL PRINCIPLE
ALLGEMEIN PRINZIP



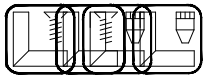

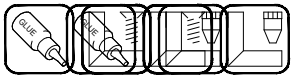

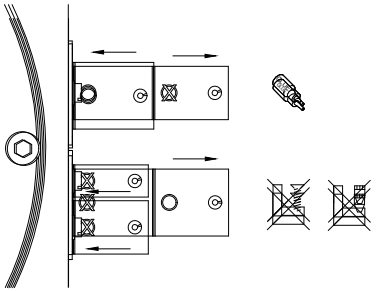

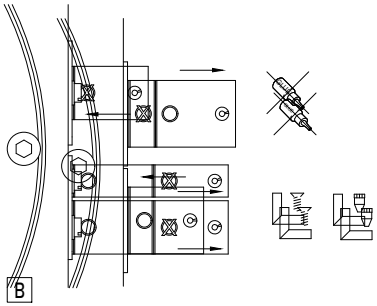

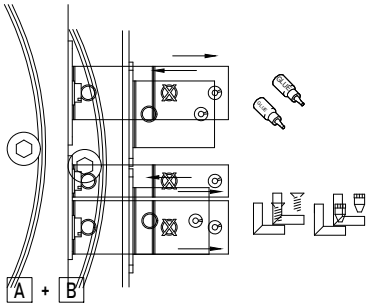



CORNER SCREW MFPT

GLUE INJECTION + CORNER CONNECTION 197.D600.00 | 097.0183.00

MASTERLINE 8-Fu

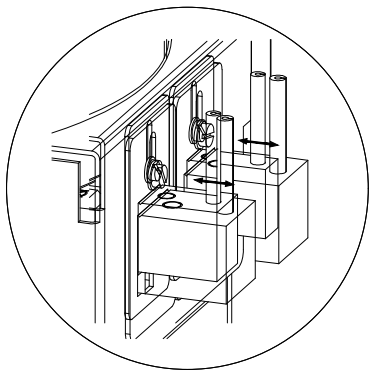

ALGEMEEN PRINCIPE
GENERAL PRINCIPE
GENERAL PRINCIPLE
ALLGEMEIN PRINZIP

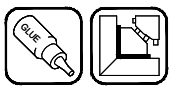

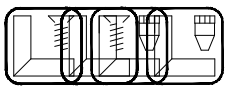

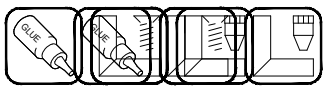

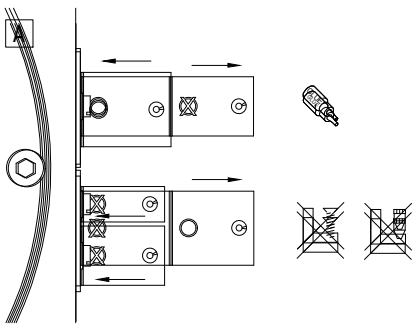

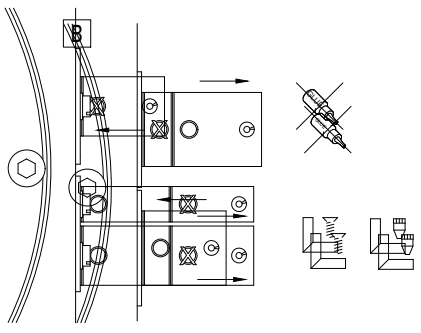

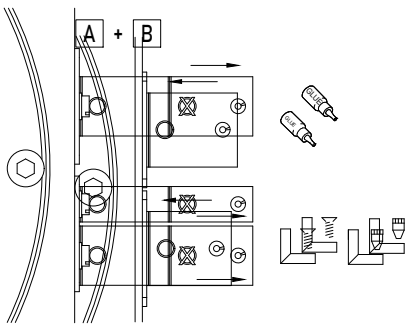



CORNER SCREW MFPT

GLUE INJECTION + CORNER CONNECTION 197.D600.00 | 097.0183.00

MASTERLINE 8-Fu

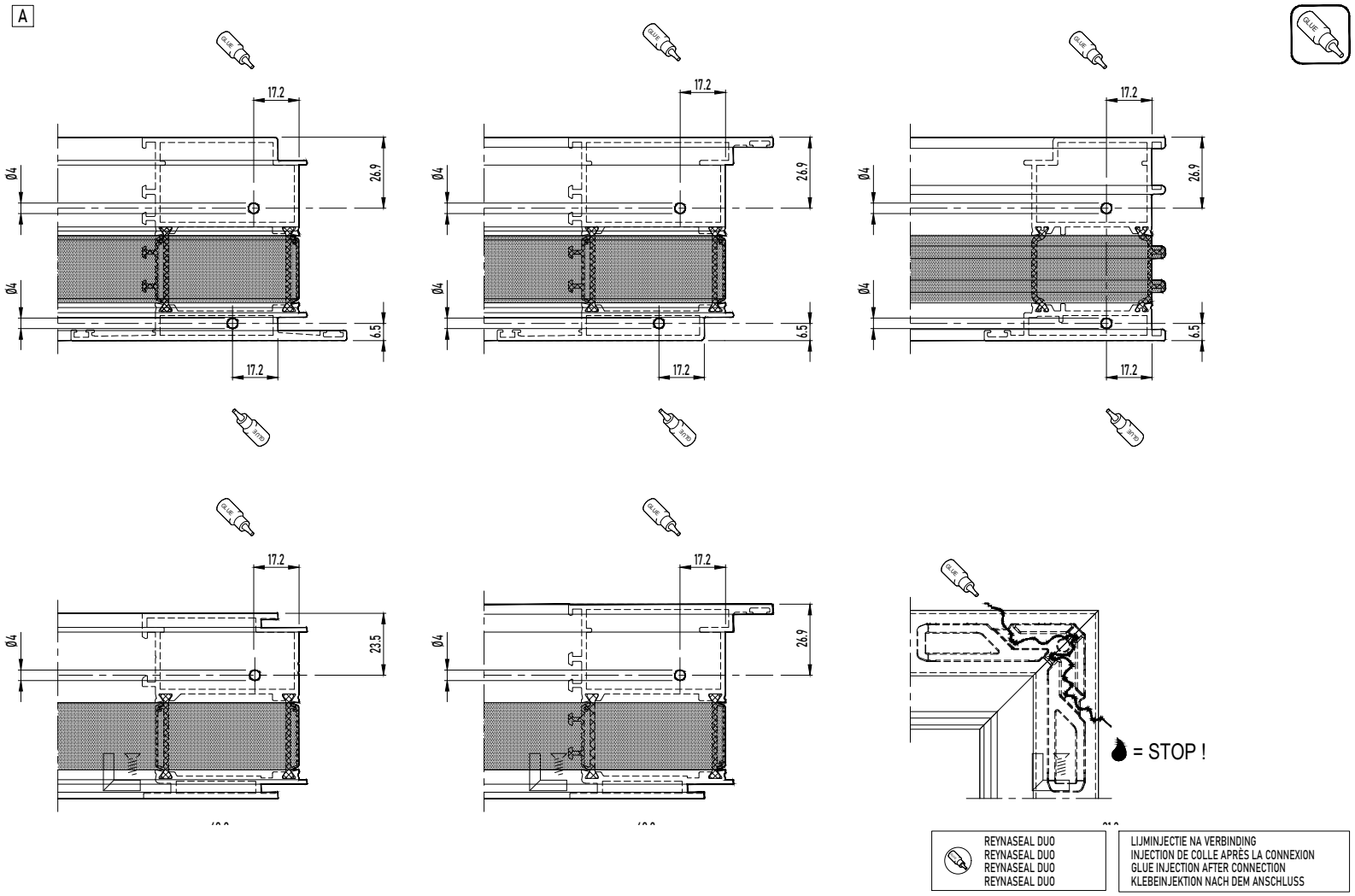

Aanpassing diameter: zie handleiding 197.D600.00 / Modification diamètre: voir manuel 197.D600.00
Change size diameter: see manual 197.D600.00 / Wechsel Durchmesser: siehe Gebrauchsanweisung 197.D600.00

CORNER SCREW MFPT

GLUE INJECTION + CORNER CONNECTION 197.D600.00 | 097.0183.00

MASTERLINE 8-Fu

B

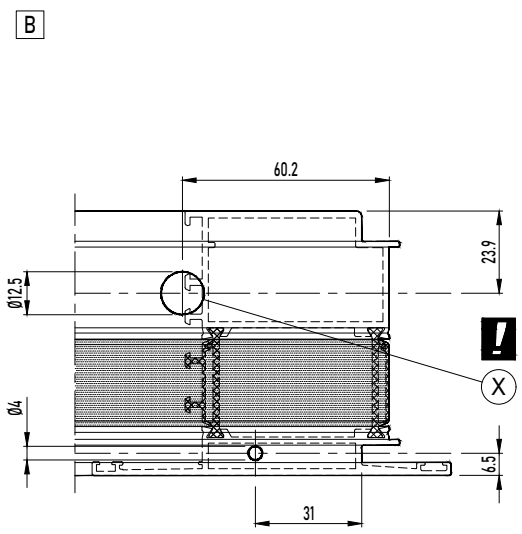

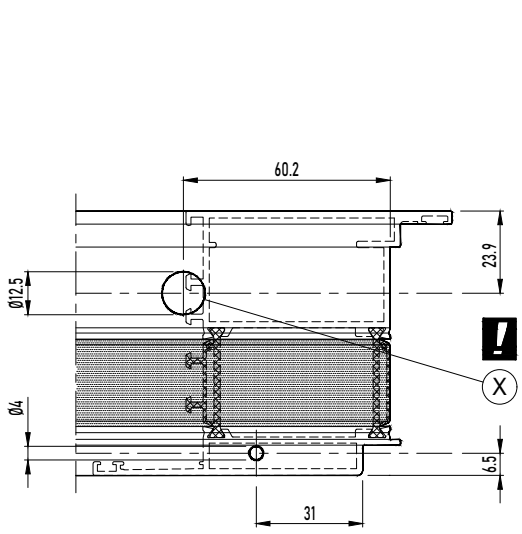

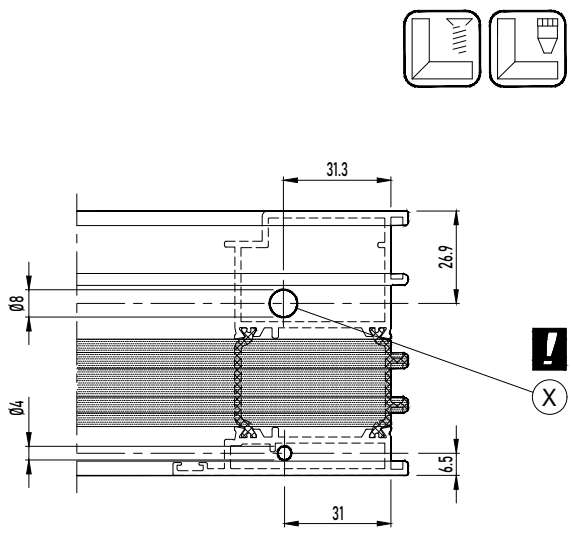

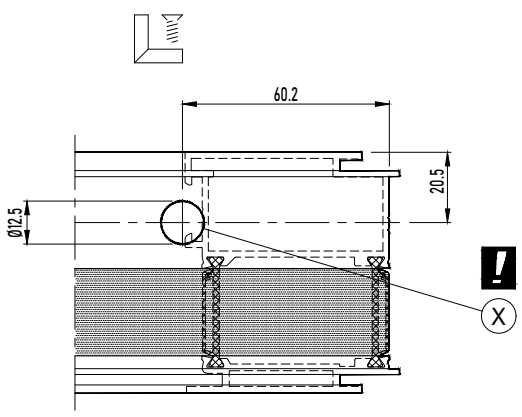

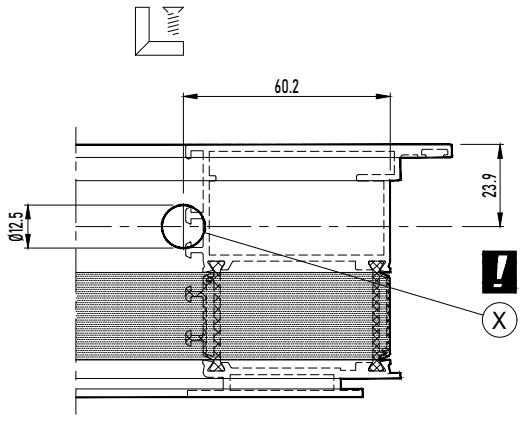

LIJMINJECTIE VOOR VERBINDING
INJECTION DE COLLE AVANT LA CONNEXION
GLUE INJECTION BEFORE CONNECTION
KLEBEINJEKTION VOR ANSCHLUSS

Aanpassing diameter: zie handleiding 197.D600.00 / Modification diamètre: voir manuel 197.D600.00
Change size diameter: see manual 197.D600.00 / Wechsel Durchmesser: siehe Gebrauchsanweisung 197.D600.00

MONTAGEVOLGORDE
L'ORDRE DE MONTAGE
THE ORDER OF ASSEMBLY
MONTAGEREIHENFOLGE
1 2 3 .

X DICHTINGSMIDDEL
MATIERE D'ETANCHEITE
SEALING AGENT
ABDICHTUNG

CORNER SCREW MFPT

GLUE INJECTION + CORNER CONNECTION 197.D600.00 | 097.0183.00

MASTERLINE 8-Fu

A + B

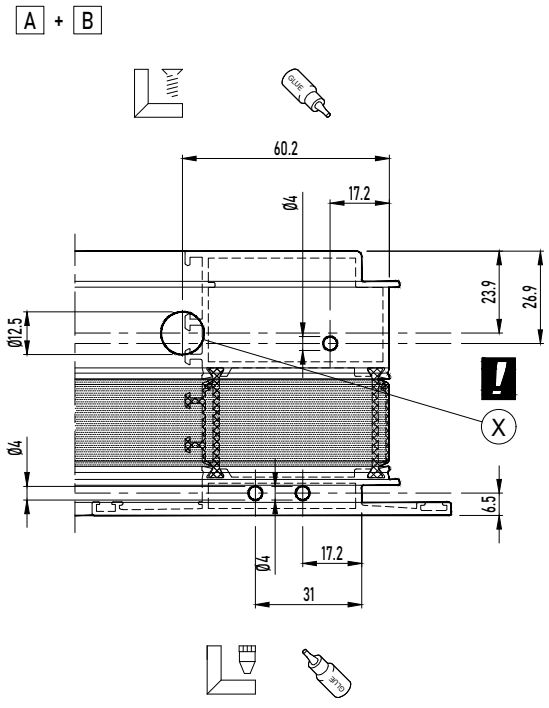

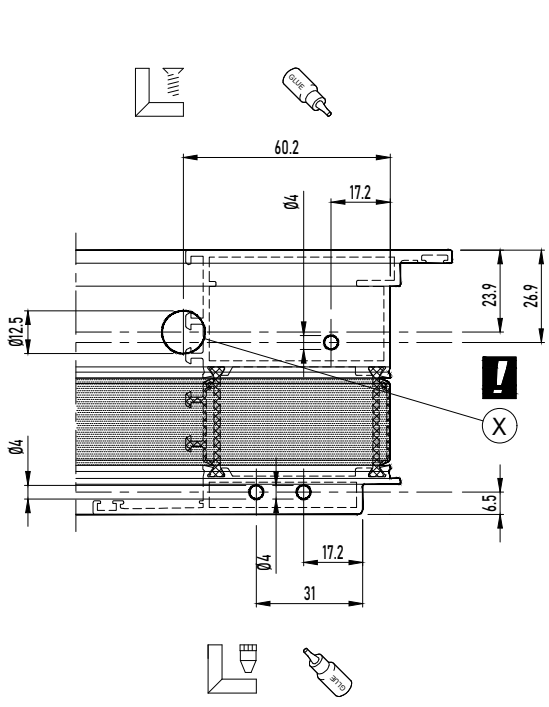

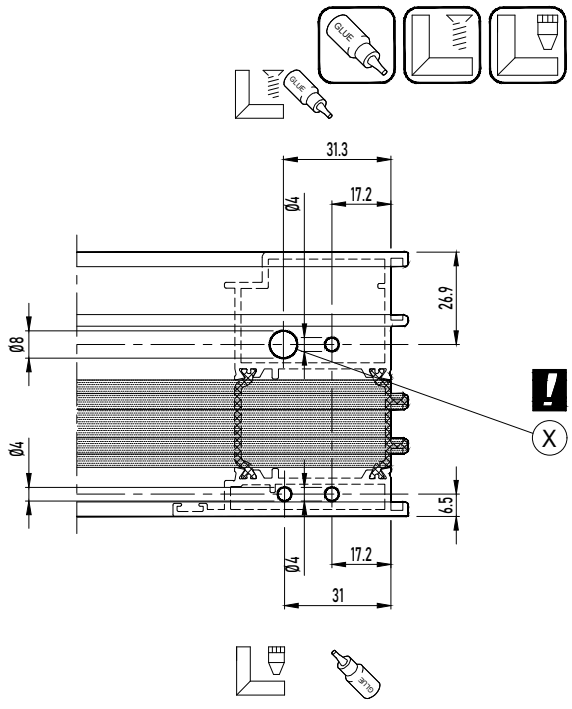

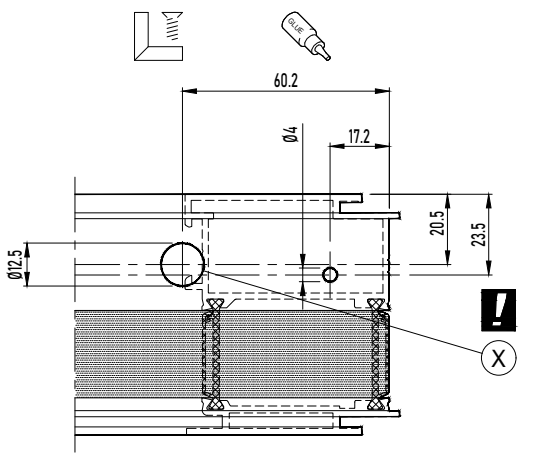

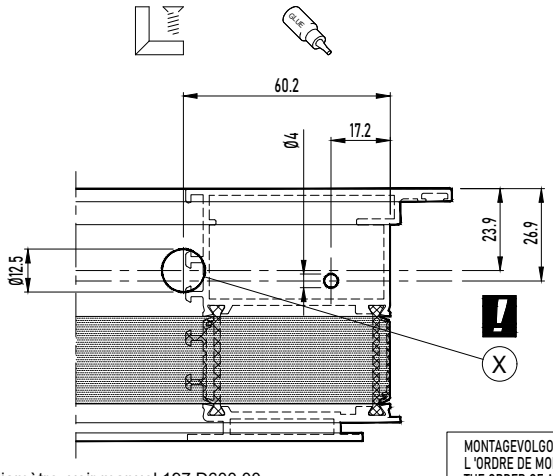

Aanpassing diameter: zie handleiding 197.D600.00 / Modification diamètre: voir manuel 197.D600.00
Change size diameter: see manual 197.D600.00 / Wechsel Durchmesser: siehe Gebrauchsanweisung 197.D600.00

MONTAGEVOLGORDE
L 'ORDRE DE MONTAGE
THE ORDER OF ASSEMBLY
MONTAGEREIHENFOLGE
1 2 3 .

X DICHTINGSMIDDEL
MATIERE D'ETANCHEITE
SEALING AGENT
ABDICHTUNG

LIJMINJECTIE NA VERBINDING
INJECTION DE COLLE APRÈS LA CONNEXION
GLUE INJECTION AFTER CONNECTION
KLEBEINJEKTION NACH DEM ANSCHLUSS

CORNER SCREW MFPT

SCREW CORNER CONNECTION 097.P300.00 + 097.E700.00

MASTERLINE 8-Fu

097.E700.00 --> VERGROOT DE DIAMETER NAAR 4MM
097.E700.00 --> AUGMENTER LE DIAMETRE A 4MM
097.E700.00 --> INCREASE THE DIAMETER TO 4MM
097.E700.00 --> ERHÖHEN SIE DEN DURCHMESSER AUF 4MM

X DICHTINGSMIDDEL
MATIERE D'ETANCHEITE
SEALING AGENT
ABDICHTUNG



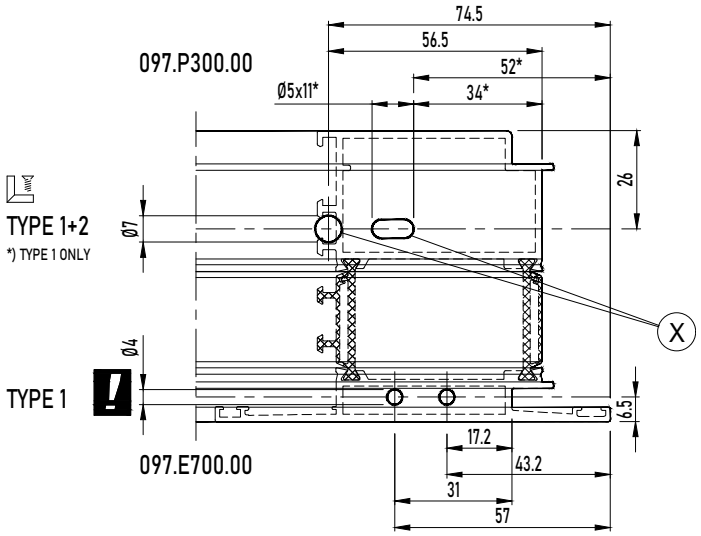

CORNER SCREW MFPT

SCREW CORNER CONNECTION 097.P300.00 + 097.E700.00

MASTERLINE 8-Fu

097.E700.00 --> VERGROOT DE DIAMETER NAAR 4MM
097.E700.00 --> AUGMENTER LE DIAMETRE A 4MM
097.E700.00 --> INCREASE THE DIAMETER TO 4MM
097.E700.00 --> ERHÖHEN SIE DEN DURCHMESSER AUF 4MM

X DICHTINGSMIDDEL
MATIERE D'ETANCHEITE
SEALING AGENT
ABDICHTUNG



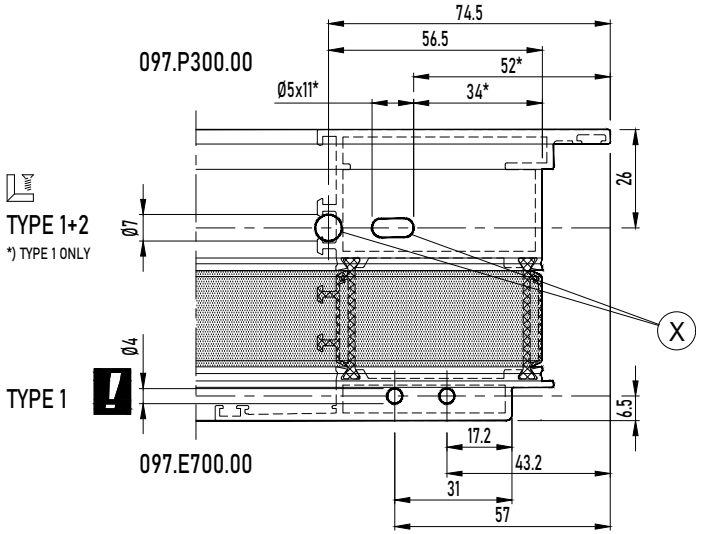

CORNER SCREW MFPT

SCREW CORNER CONNECTION 097.P300.00 + 097.E700.00

MASTERLINE 8-Fu

097.E700.00 --> VERGROOT DE DIAMETER NAAR 4MM
097.E700.00 --> AUGMENTER LE DIAMETRE A 4MM
097.E700.00 --> INCREASE THE DIAMETER TO 4MM
097.E700.00 --> ERHÖHEN SIE DEN DURCHMESSER AUF 4MM

X DICHTINGSMIDDEL
MATIERE D'ETANCHEITE
SEALING AGENT
ABDICHTUNG



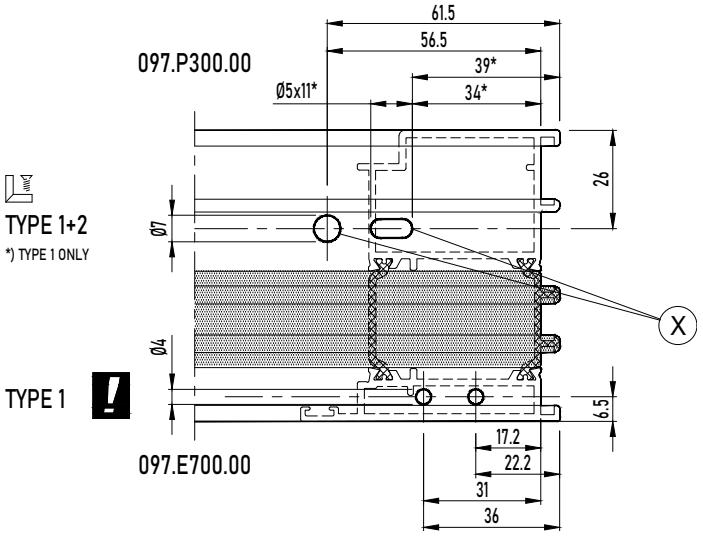

CORNER SCREW MFPT

SCREW CORNER CONNECTION 097.P300.00 + 097.E700.00

MASTERLINE 8-Fu

097.E700.00 --> VERGROOT DE DIAMETER NAAR 4MM
097.E700.00 --> AUGMENTER LE DIAMETRE A 4MM
097.E700.00 --> INCREASE THE DIAMETER TO 4MM
097.E700.00 --> ERHÖHEN SIE DEN DURCHMESSER AUF 4MM

X DICHTINGSMIDDEL
MATIERE D'ETANCHEITE
SEALING AGENT
ABDICHTUNG



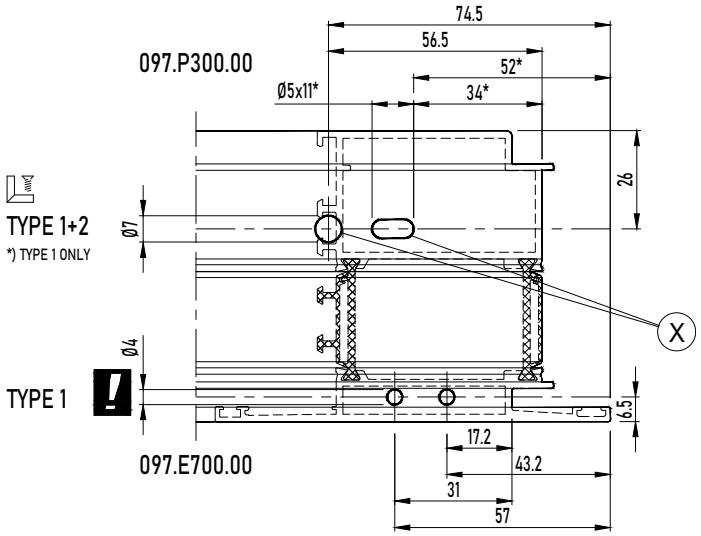

CORNER SCREW MFPT

SCREW CORNER CONNECTION 097.P300.00 + 097.E700.00

MASTERLINE 8-Fu

097.E700.00 --> VERGROOT DE DIAMETER NAAR 4MM
097.E700.00 --> AUGMENTER LE DIAMETRE A 4MM
097.E700.00 --> INCREASE THE DIAMETER TO 4MM
097.E700.00 --> ERHÖHEN SIE DEN DURCHMESSER AUF 4MM

X DICHTINGSMIDDEL
MATIERE D'ETANCHEITE
SEALING AGENT
ABDICHTUNG



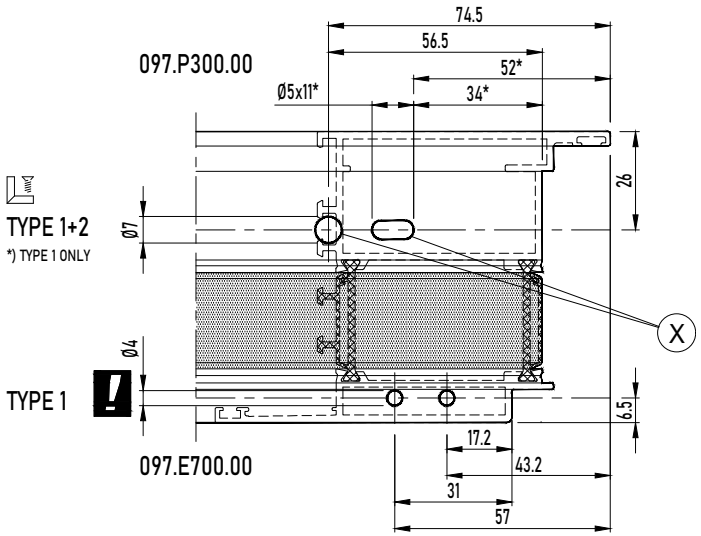

CORNER SCREW MFPT

SCREW CORNER CONNECTION 097.P300.00 + 097.E700.00

MASTERLINE 8-Fu

097.E700.00 --> VERGROOT DE DIAMETER NAAR 4MM
097.E700.00 --> AUGMENTER LE DIAMETRE A 4MM
097.E700.00 --> INCREASE THE DIAMETER TO 4MM
097.E700.00 --> ERHÖHEN SIE DEN DURCHMESSER AUF 4MM

X DICHTINGSMIDDEL
MATIERE D'ETANCHEITE
SEALING AGENT
ABDICHTUNG



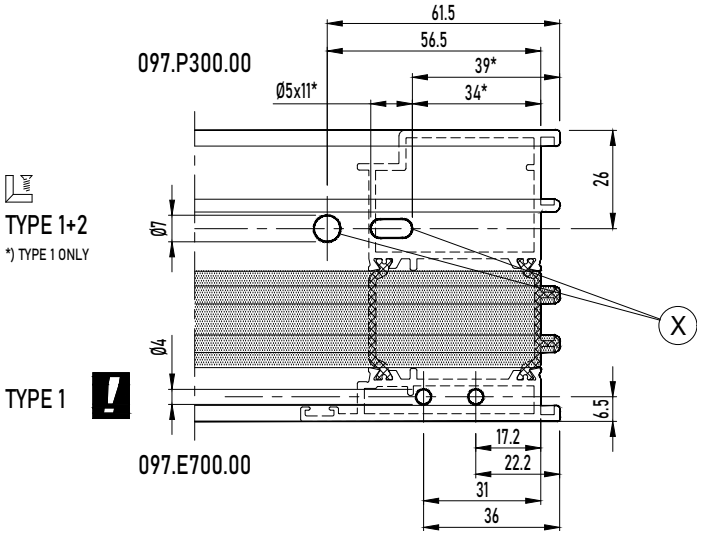

CORNER SCREW MFPT GLUE INJECTION

GLUE INJECTION + CORNER CONNECTION 197.F900.00 | 097.0183.00

MASTERLINE 8-Fu

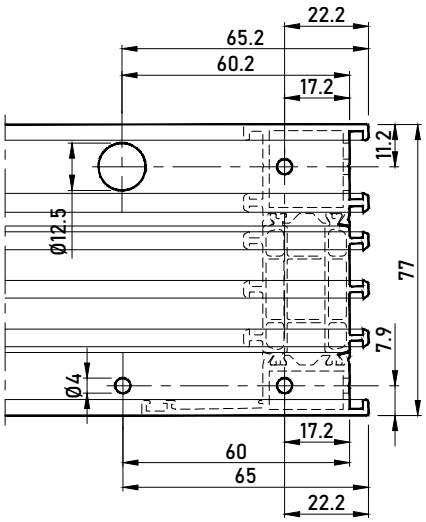

CORNER SCREW MFPT GLUE INJECTION

GLUE INJECTION + CORNER CONNECTION 197.F900.00 | 097.0183.00

MASTERLINE 8-Fu

ALGEMEEN PRINCIPE
GENERAL PRINCIPE
GENERAL PRINCIPLE
ALLGEMEIN PRINZIP

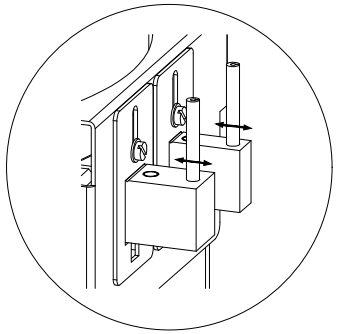

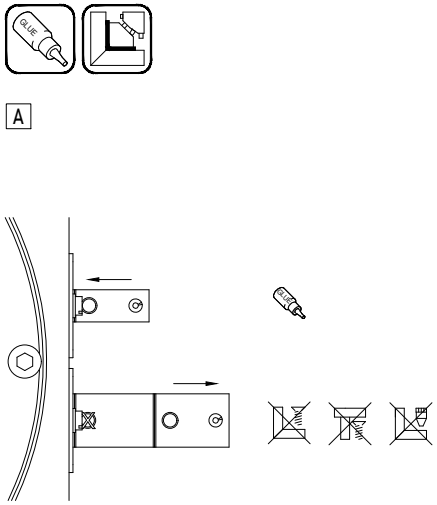

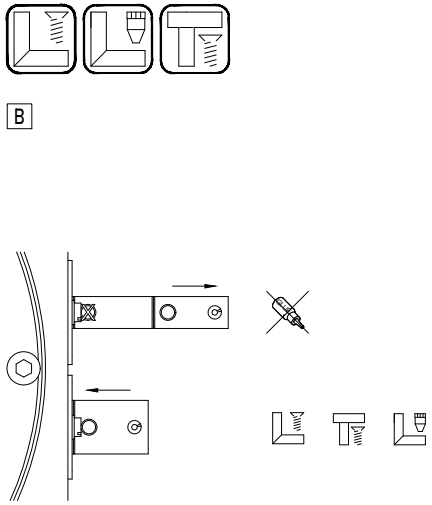

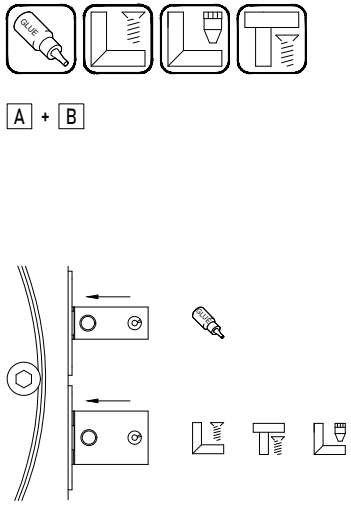

CORNER SCREW MFPT GLUE INJECTION

GLUE INJECTION + CORNER CONNECTION 197.F900.00 | 097.0183.00

MASTERLINE 8-Fu

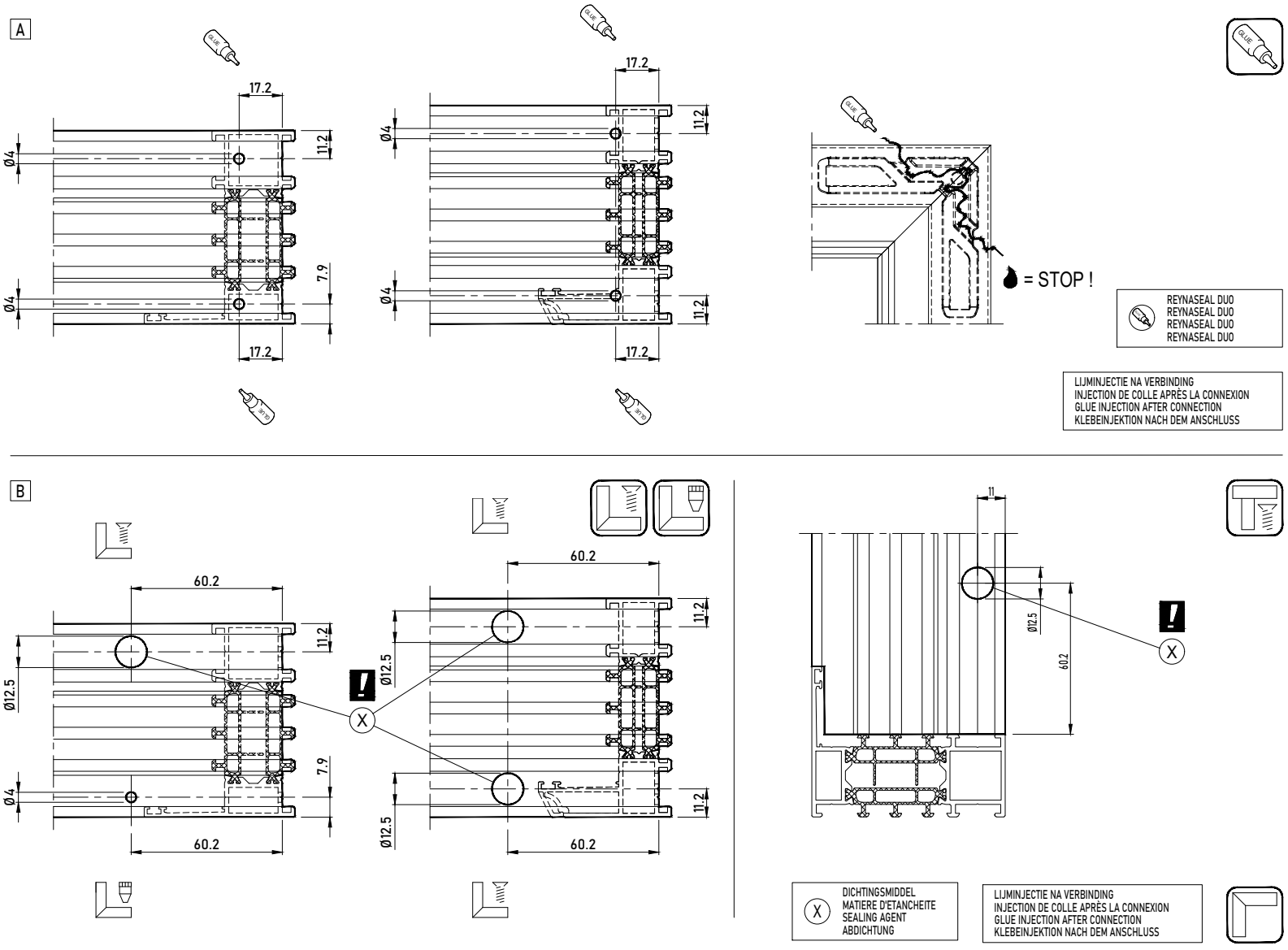

CORNER SCREW MFPT GLUE INJECTION

GLUE INJECTION + CORNER CONNECTION 197.F900.00 | 097.0183.00

MASTERLINE 8-Fu

A + B



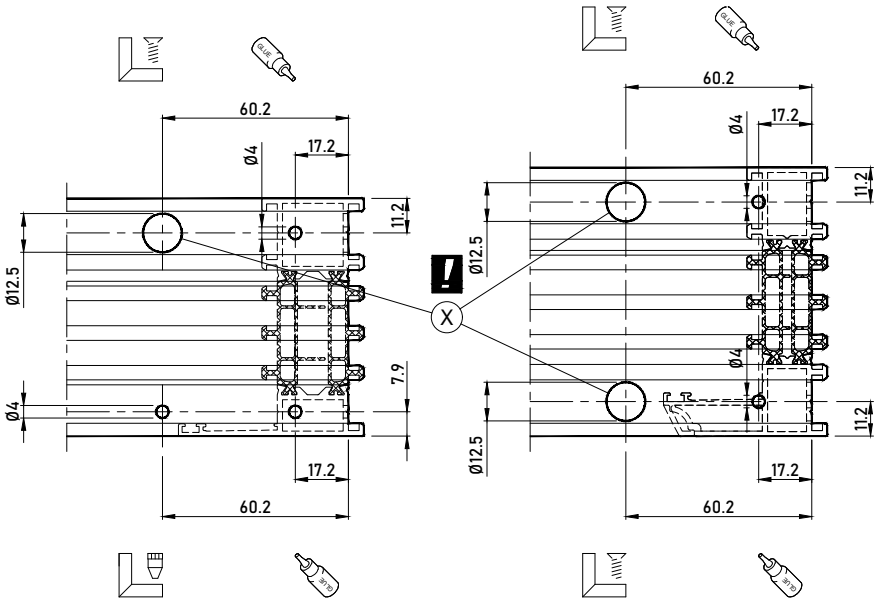

Aanpassing diameter: zie handleiding 197.F900.00
Modification diamètre: voir manuel 197.F900.00
Change size diameter: see manual 197.F900.00
Wechsel Durchmesser: siehe Gebrauchsanweisung 197.F900.00

MONTAGEVOLGORDE L'ORDRE DE MONTAGE THE ORDER OF ASSEMBLY MONTAGEREIHENFOLGE	1 2 3 .



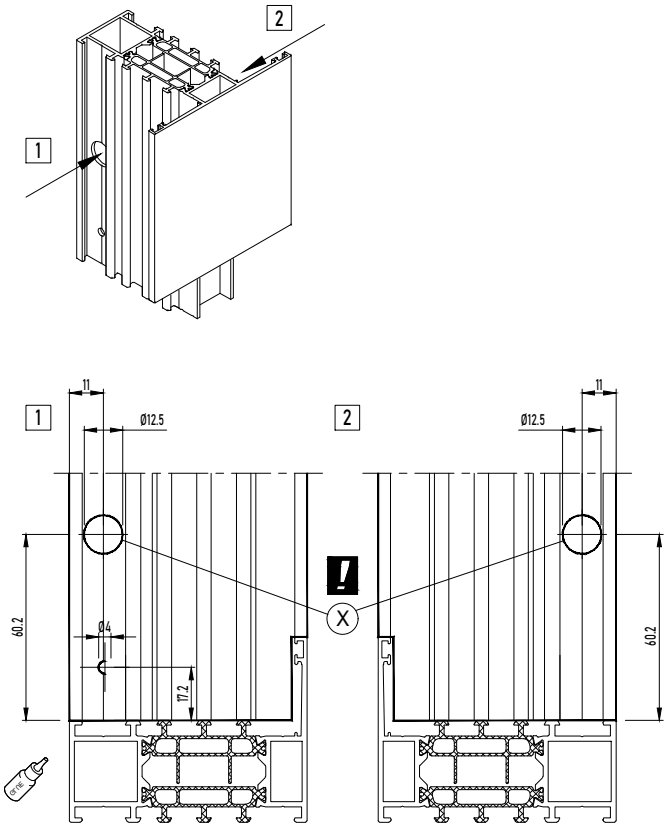

X	DICHTINGSMIDDEL MATIERE D'ETANCHEITE SEALING AGENT ABDICHTUNG

LIJMINJECTIE NA VERBINDING
INJECTION DE COLLE APRÈS LA CONNEXION
GLUE INJECTION AFTER CONNECTION
KLEBEINJEKTION NACH DEM ANSCHLUSS

CORNER SCREW MFPT GLUE INJECTION

GLUE INJECTION + CORNER CONNECTION 197.F900.00 | 097.0183.00

MASTERLINE 8-Fu

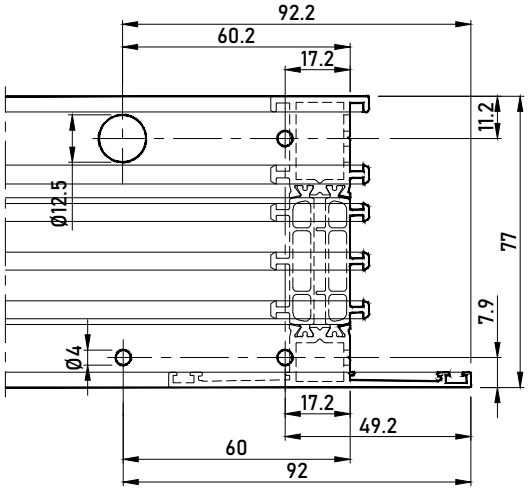

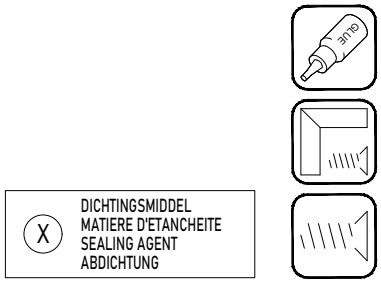

CORNER SCREW MFPT GLUE INJECTION

GLUE INJECTION + CORNER CONNECTION 197.F900.00 | 097.0183.00

MASTERLINE 8-Fu

ALGEMEEN PRINCIPE
GENERAL PRINCIPE
GENERAL PRINCIPLE
ALLGEMEIN PRINZIP

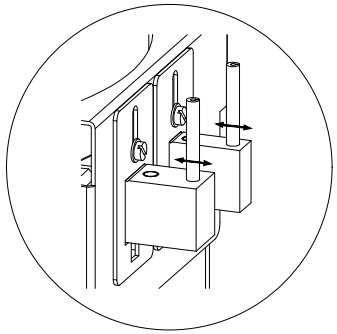

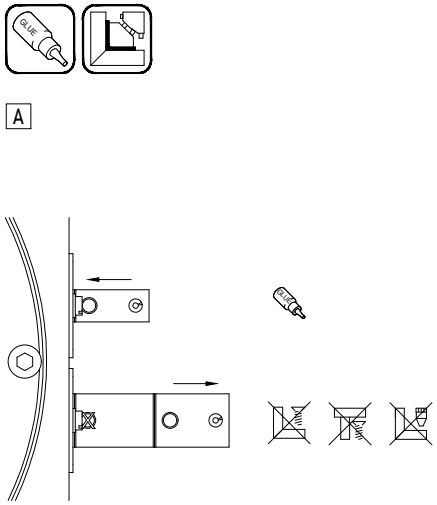

A



B

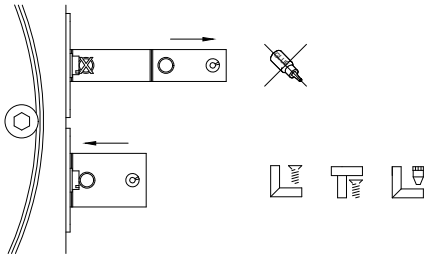

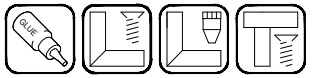

A + B

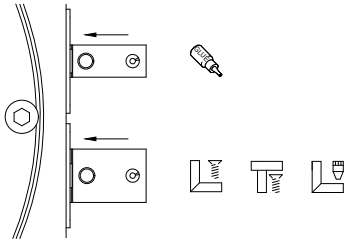

CORNER SCREW MFPT GLUE INJECTION

GLUE INJECTION + CORNER CONNECTION 197.F900.00 | 097.0183.00

MASTERLINE 8-Fu

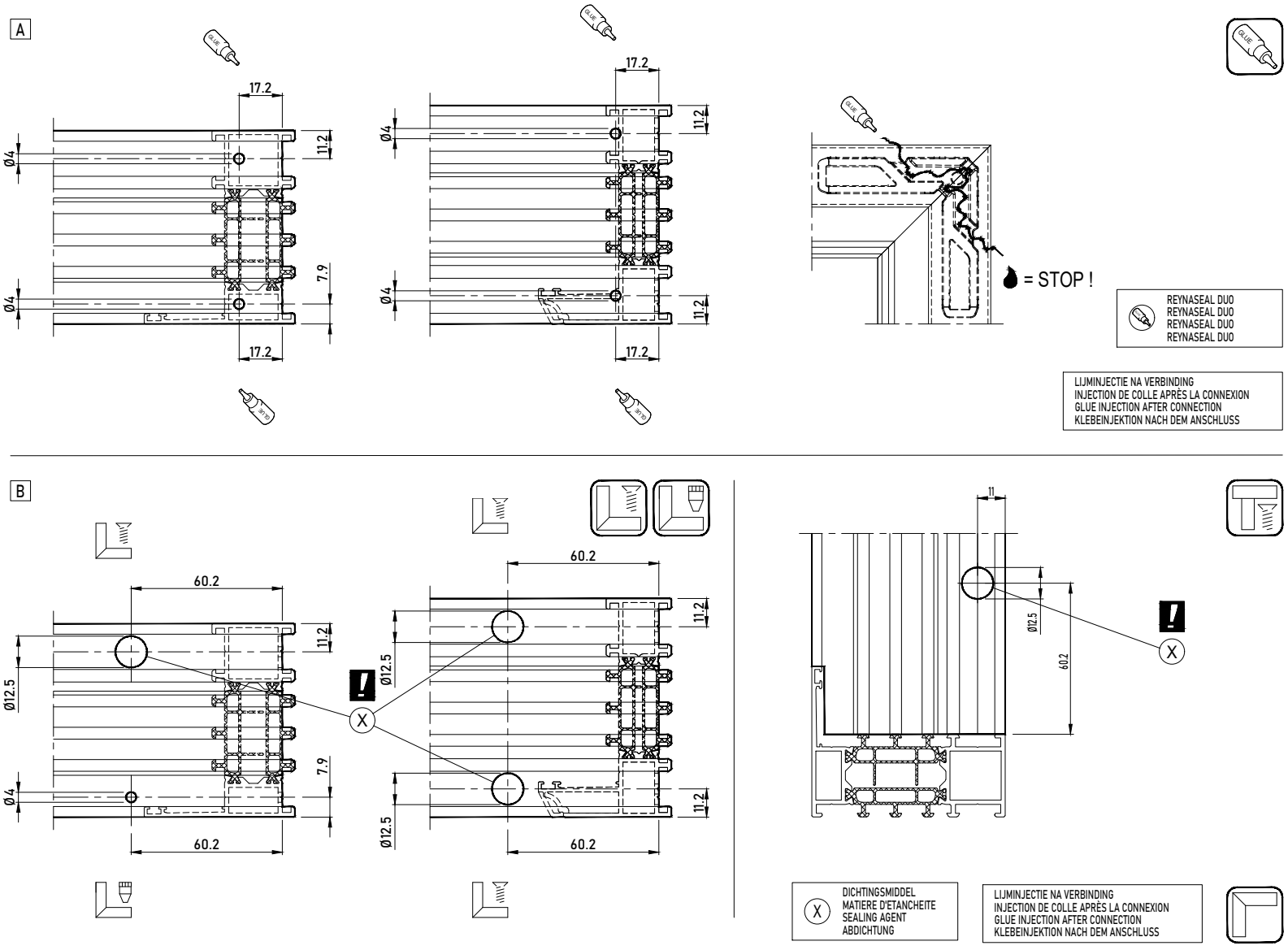

CORNER SCREW MFPT GLUE INJECTION

GLUE INJECTION + CORNER CONNECTION 197.F900.00 | 097.0183.00

MASTERLINE 8-Fu

A + B



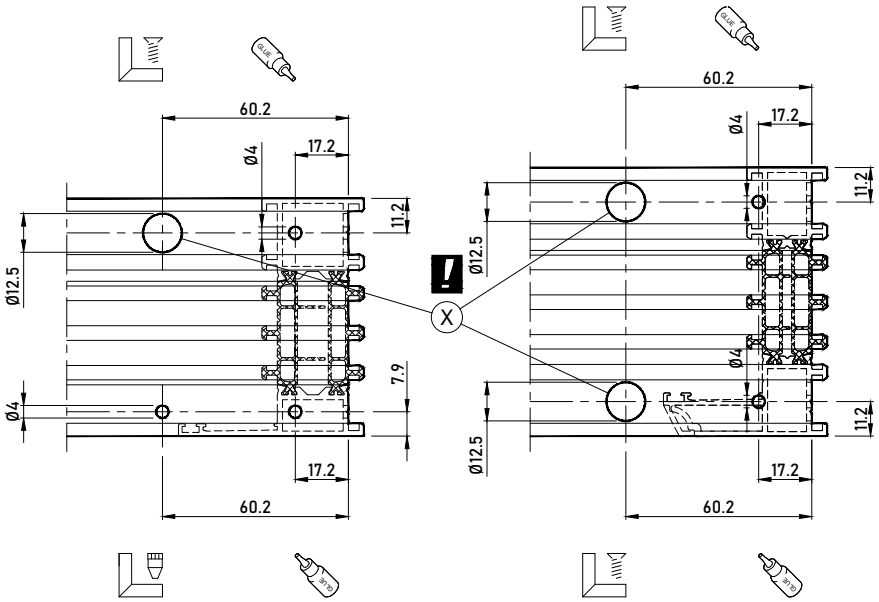

Aanpassing diameter: zie handleiding 197.F900.00
Modification diamètre: voir manuel 197.F900.00
Change size diameter: see manual 197.F900.00
Wechsel Durchmesser: siehe Gebrauchsanweisung 197.F900.00

MONTAGEVOLGORDE L'ORDRE DE MONTAGE THE ORDER OF ASSEMBLY MONTAGEREIHENFOLGE	1	2	3	.



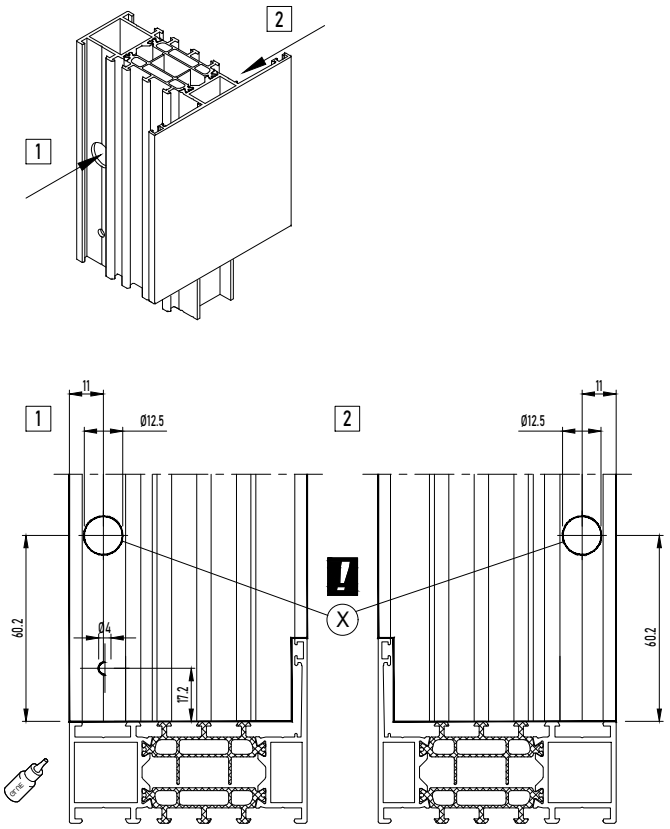

X	DICHTINGSMIDDEL MATIERE D'ETANCHEITE SEALING AGENT ABDICHTUNG

LIJMINJECTIE NA VERBINDING
INJECTION DE COLLE APRÈS LA CONNEXION
GLUE INJECTION AFTER CONNECTION
KLEBEINJEKTION NACH DEM ANSCHLUSS

CORNER SCREW JIG

GLUE INJECTION + CORNER CONNECTION 197.F900.00

MASTERLINE 8-Fu

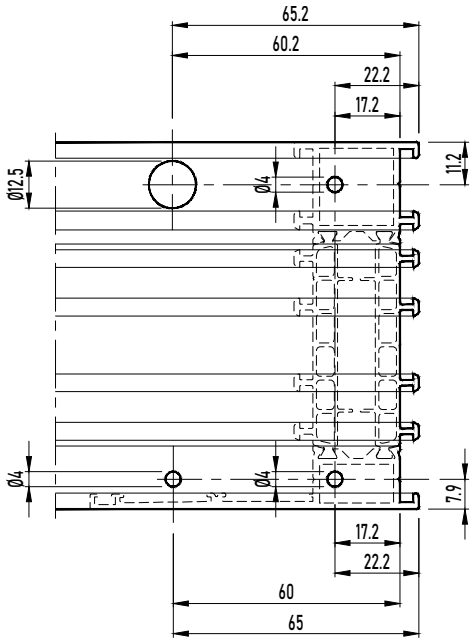

LIJMINJECTIE **NA** VERBINDING
INJECTION DE COLLE **APRÈS** LA CONNEXION
GLUE INJECTION **AFTER** CONNECTION
KLEBEINJEKTION **NACH** DEM ANSCHLUSS

CORNER SCREW JIG

GLUE INJECTION + CORNER CONNECTION 197.F900.00

MASTERLINE 8-Fu

ALGEMEEN PRINCIPE
GENERAL PRINCIPE
GENERAL PRINCIPLE
ALLGEMEIN PRINZIP

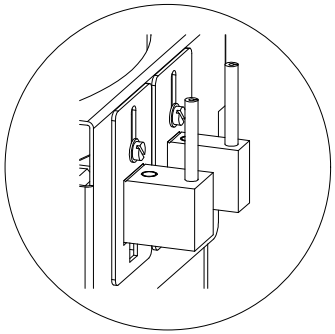



A



B

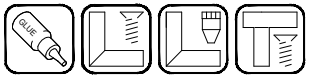

A + B

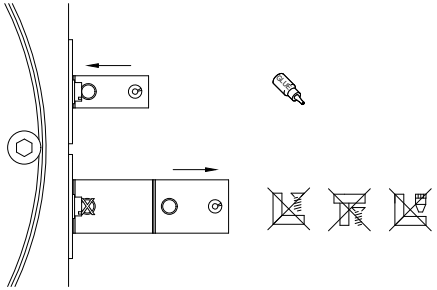

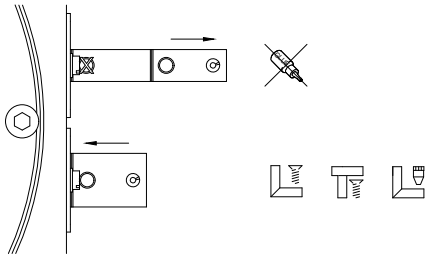

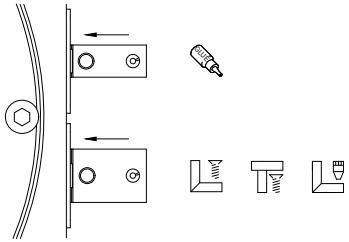

CORNER SCREW JIG

GLUE INJECTION + CORNER CONNECTION 197.F900.00

MASTERLINE 8-Fu

A

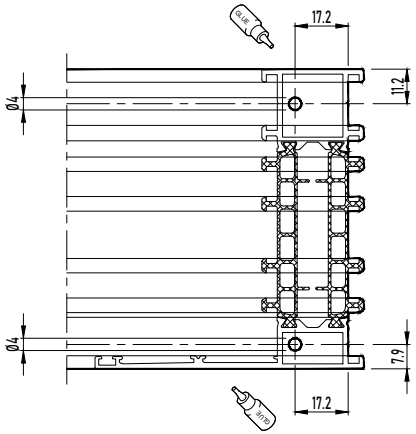

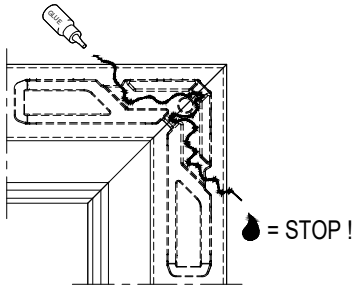

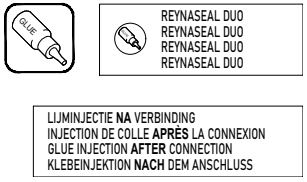

LIJMINJECTIE **NA** VERBINDING
INJECTION DE COLLE **APRÈS** LA CONNEXION
GLUE INJECTION **AFTER** CONNECTION
KLEBEINJEKTION **NACH** DEM ANSCHLUSS

CORNER SCREW JIG

GLUE INJECTION + CORNER CONNECTION 197.F900.00

MASTERLINE 8-Fu

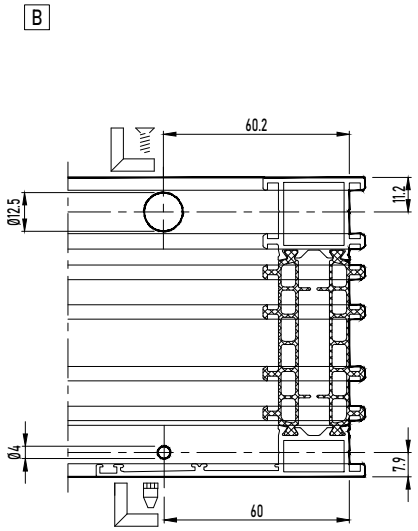

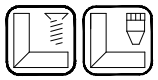

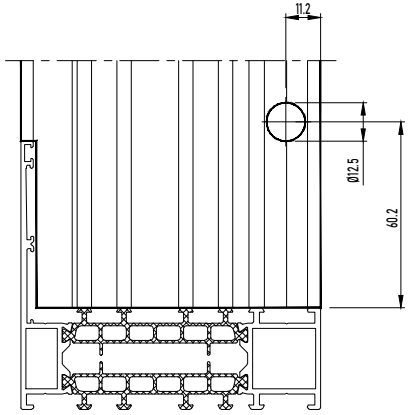

LIJMINJECTIE VOOR VERBINDING
INJECTION DE COLLE AVANT LA CONNEXION
GLUE INJECTION BEFORE CONNECTION
KLEBEINJEKTION VOR ANSCHLUSS



CORNER SCREW JIG

GLUE INJECTION + CORNER CONNECTION 197.F900.00

MASTERLINE 8-Fu

A + B

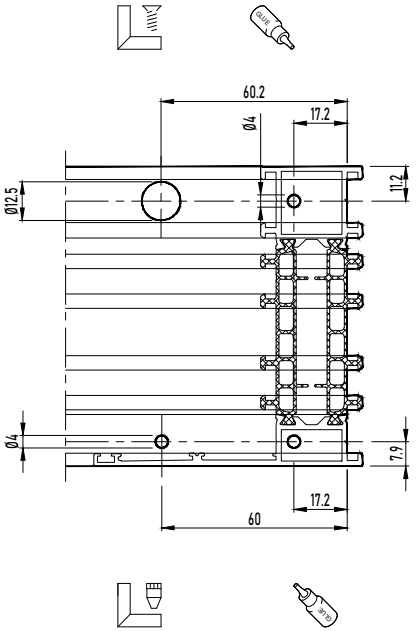

Aanpassing diameter: zie handleiding 197.F900.00
Modification diamètre: voir manuel 197.F900.00
Change size diameter: see manual 197.F900.00
Wechsel Durchmesser: siehe Gebrauchsanweisung 197.F900.00

MONTAGEVOLGORDE L'ORDRE DE MONTAGE THE ORDER OF ASSEMBLY MONTAGEREIHENFOLGE	1 2 3 .

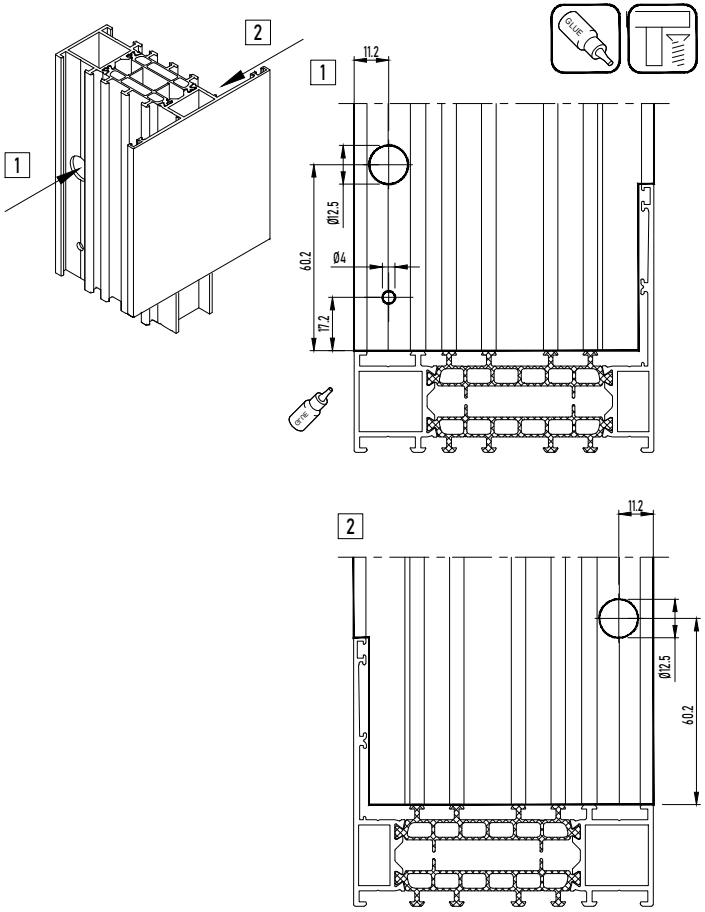

LIJMINJECTIE **NA** VERBINDING
INJECTION DE COLLE **APRÈS** LA CONNEXION
GLUE INJECTION **AFTER** CONNECTION
KLEBEINJEKTION **NACH** DEM ANSCHLUSS

CORNER SCREW JIG

GLUE INJECTION + CORNER CONNECTION 197.F900.00

MASTERLINE 8-Fu

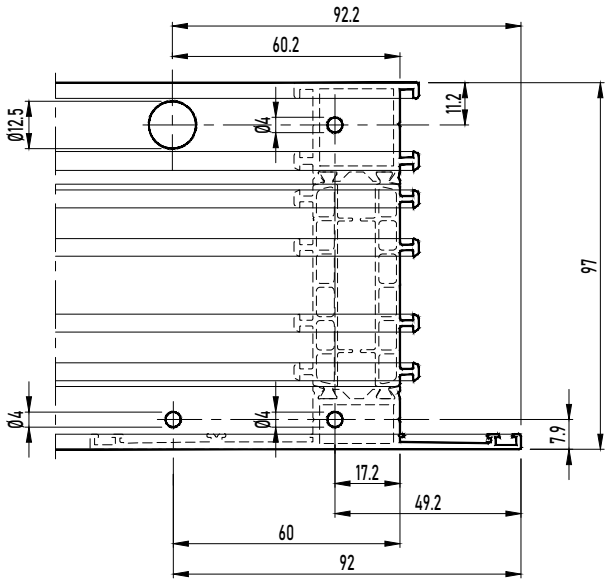

LIJMINJECTIE **NA** VERBINDING
INJECTION DE COLLE **APRÈS** LA CONNEXION
GLUE INJECTION **AFTER** CONNECTION
KLEBEINJEKTION **NACH** DEM ANSCHLUSS

CORNER SCREW JIG

GLUE INJECTION + CORNER CONNECTION 197.F900.00

MASTERLINE 8-Fu

ALGEMEEN PRINCIPE
GENERAL PRINCIPE
GENERAL PRINCIPLE
ALLGEMEIN PRINZIP

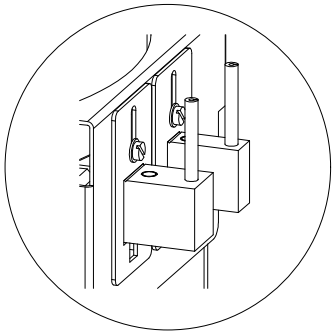

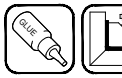

A



B

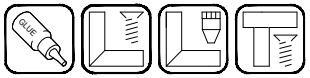

A + B

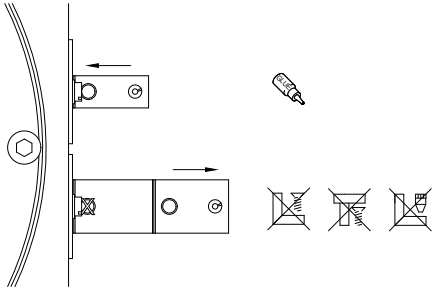

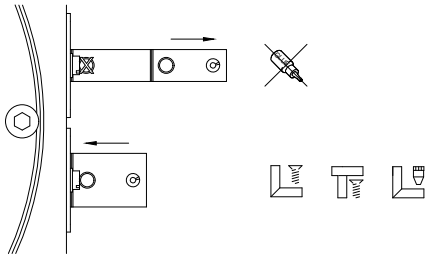

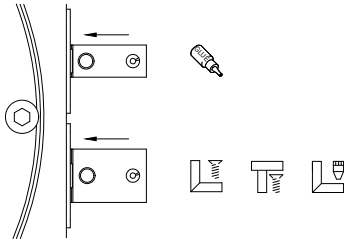

CORNER SCREW JIG

GLUE INJECTION + CORNER CONNECTION 197.F900.00

MASTERLINE 8-Fu

A

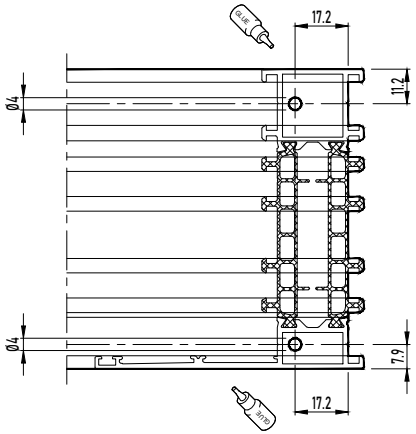

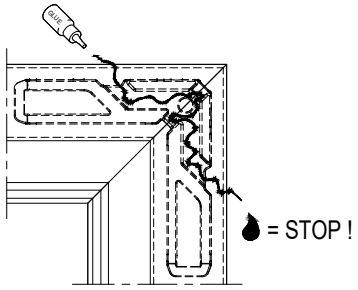

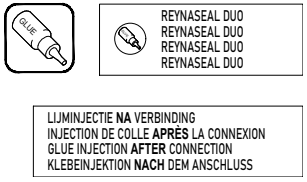

LIJMINJECTIE **NA** VERBINDING
INJECTION DE COLLE **APRÈS** LA CONNEXION
GLUE INJECTION **AFTER** CONNECTION
KLEBEINJEKTION **NACH** DEM ANSCHLUSS

CORNER SCREW JIG

GLUE INJECTION + CORNER CONNECTION 197.F900.00

MASTERLINE 8-Fu

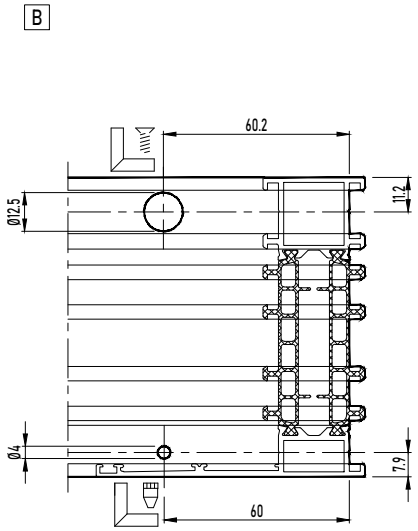

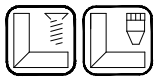

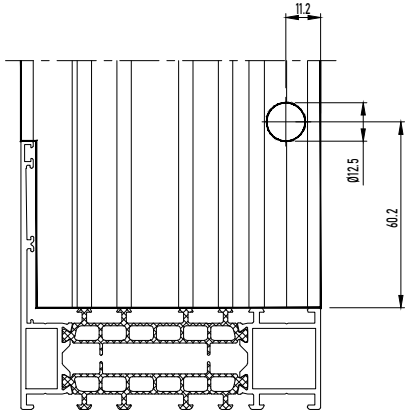

LIJMINJECTIE VOOR VERBINDING
INJECTION DE COLLE AVANT LA CONNEXION
GLUE INJECTION BEFORE CONNECTION
KLEBEINJEKTION VOR ANSCHLUSS



CORNER SCREW JIG

GLUE INJECTION + CORNER CONNECTION 197.F900.00

MASTERLINE 8-Fu

A + B

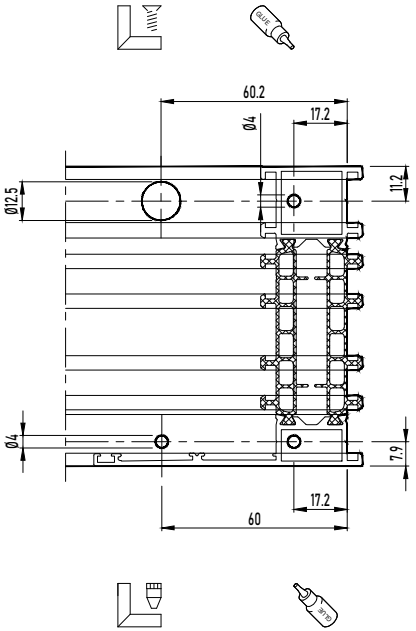

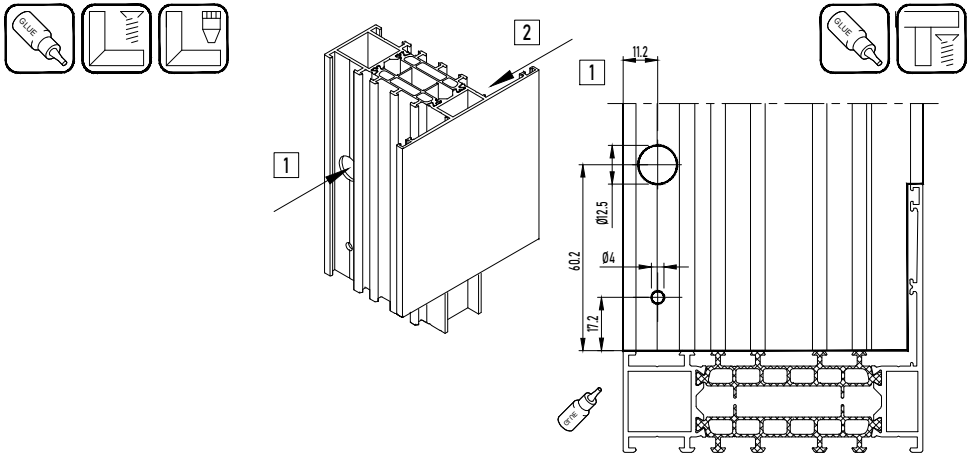

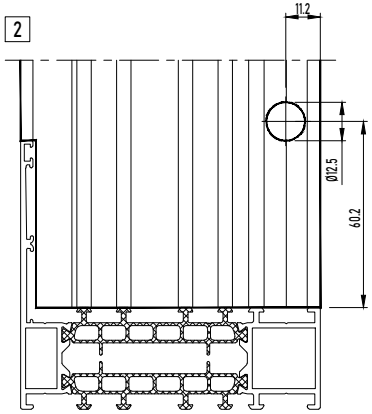

Aanpassing diameter: zie handleiding 197.F900.00
Modification diamètre: voir manuel 197.F900.00
Change size diameter: see manual 197.F900.00
Wechsel Durchmesser: siehe Gebrauchsanweisung 197.F900.00

MONTAGEVOLGORDE L'ORDRE DE MONTAGE THE ORDER OF ASSEMBLY MONTAGEREIHENFOLGE	1 2 3 .

LIJMINJECTIE **NA** VERBINDING
INJECTION DE COLLE **APRÈS** LA CONNEXION
GLUE INJECTION **AFTER** CONNECTION
KLEBEINJEKTION **NACH** DEM ANSCHLUSS

CORNER SCREW JIG

GLUE INJECTION + CORNER CONNECTION 197.F900.00

MASTERLINE 8-Fu

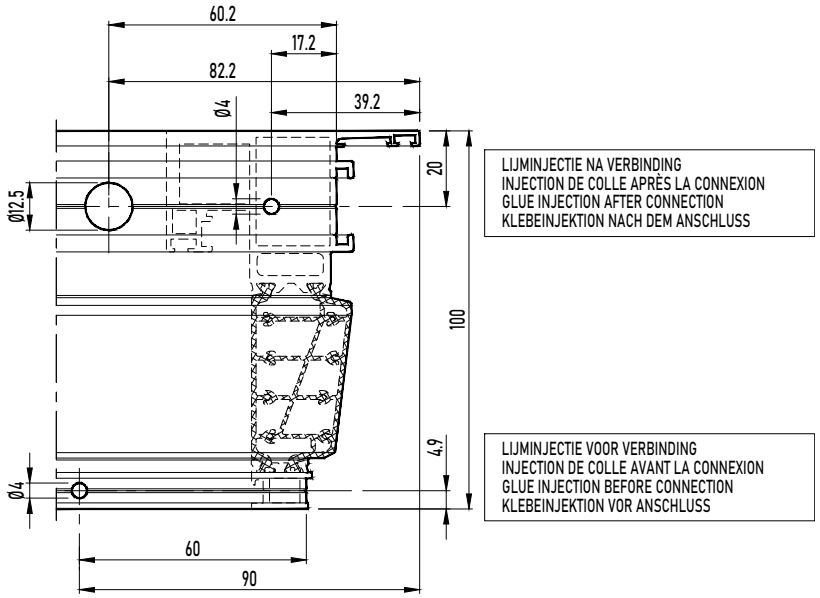

LIJMINJECTIE NA VERBINDING
INJECTION DE COLLE APRÈS LA CONNEXION
GLUE INJECTION AFTER CONNECTION
KLEBEINJEKTION NACH DEM ANSCHLUSS

CORNER SCREW JIG

GLUE INJECTION + CORNER CONNECTION 197.F900.00

MASTERLINE 8-Fu

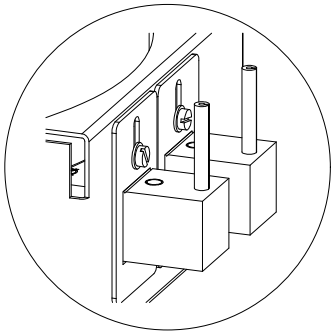

ALGEMEEN PRINCIPE
GENERAL PRINCIPE
GENERAL PRINCIPLE
ALLGEMEIN PRINZIP



A

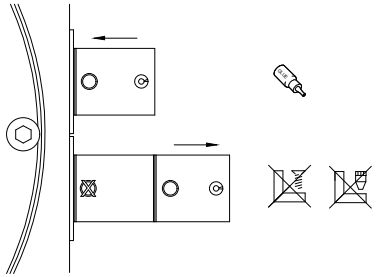

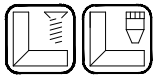

B

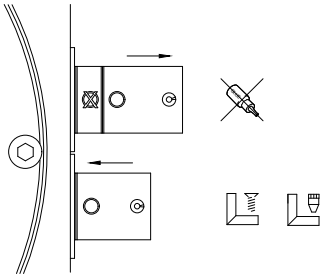



A + B

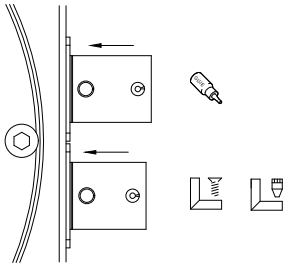

CORNER SCREW JIG

GLUE INJECTION + CORNER CONNECTION 197.F900.00

MASTERLINE 8-Fu

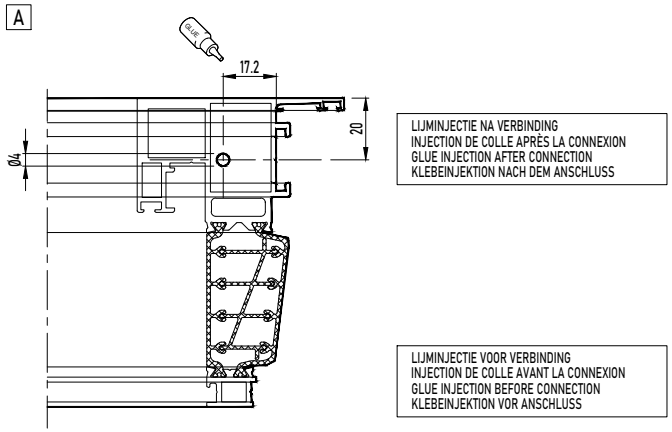

LIJMINJECTIE NA VERBINDING
INJECTION DE COLLE APRÈS LA CONNEXION
GLUE INJECTION AFTER CONNECTION
KLEBEINJEKTION NACH DEM ANSCHLUSS

LIJMINJECTIE VOOR VERBINDING
INJECTION DE COLLE AVANT LA CONNEXION
GLUE INJECTION BEFORE CONNECTION
KLEBEINJEKTION VOR ANSCHLUSS

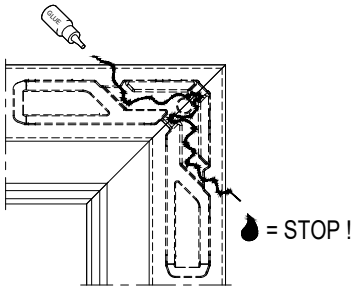



REYNASEAL DUO
REYNASEAL DUO
REYNASEAL DUO
REYNASEAL DUO

CORNER SCREW JIG

GLUE INJECTION + CORNER CONNECTION 197.F900.00

MASTERLINE 8-Fu

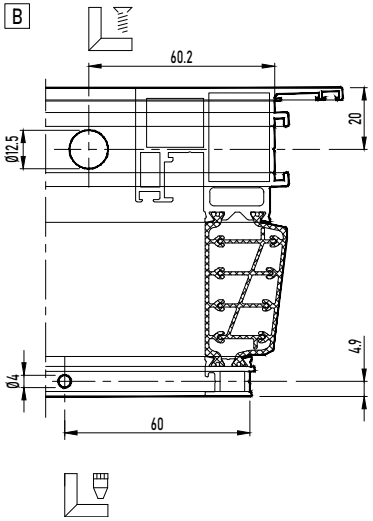

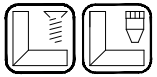

LIJMINJECTIE VOOR VERBINDING
INJECTION DE COLLE AVANT LA CONNEXION
GLUE INJECTION BEFORE CONNECTION
KLEBEINJEKTION VOR ANSCHLUSS

CORNER SCREW JIG

GLUE INJECTION + CORNER CONNECTION 197.F900.00

MASTERLINE 8-Fu

A + B

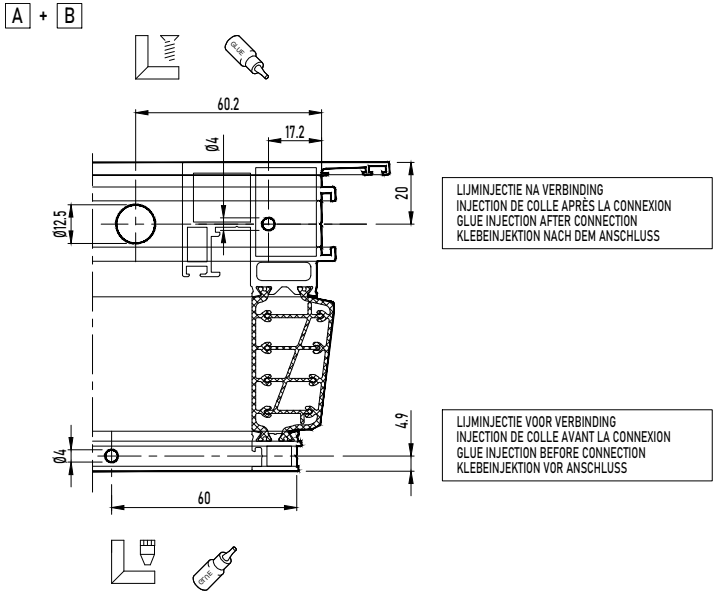

LIJMINJECTIE NA VERBINDING
INJECTION DE COLLE APRÈS LA CONNEXION
GLUE INJECTION AFTER CONNECTION
KLEBEINJEKTION NACH DEM ANSCHLUSS

LIJMINJECTIE VOOR VERBINDING
INJECTION DE COLLE AVANT LA CONNEXION
GLUE INJECTION BEFORE CONNECTION
KLEBEINJEKTION VOR ANSCHLUSS



REYNASEAL DUO
REYNASEAL DUO
REYNASEAL DUO
REYNASEAL DUO

MONTAGEVOLGORDE
L'ORDRE DE MONTAGE
THE ORDER OF ASSEMBLY
MONTAGEREIHENFOLGE
1 2 3 .



CORNER SCREW JIG

GLUE INJECTION + CORNER CONNECTION 197.F900.00

MASTERLINE 8-Fu

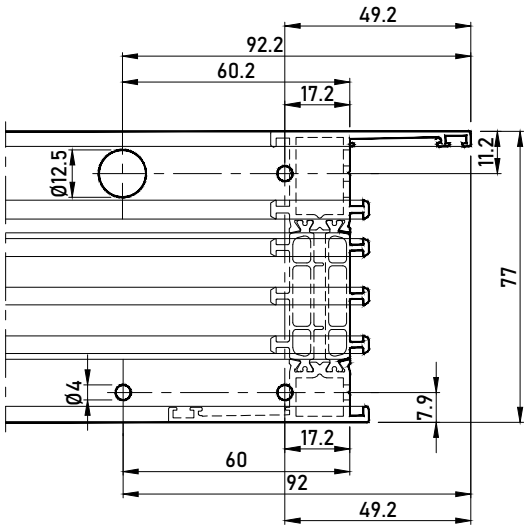

CORNER SCREW JIG

GLUE INJECTION + CORNER CONNECTION 197.F900.00

MASTERLINE 8-Fu

ALGEMEEN PRINCIPE
GENERAL PRINCIPE
GENERAL PRINCIPLE
ALLGEMEIN PRINZIP

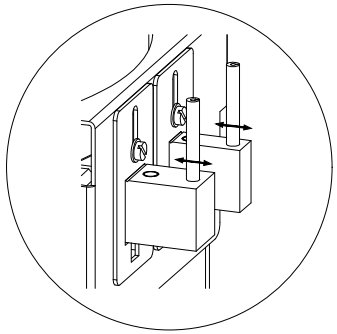



A



B

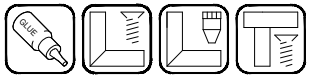

A + B

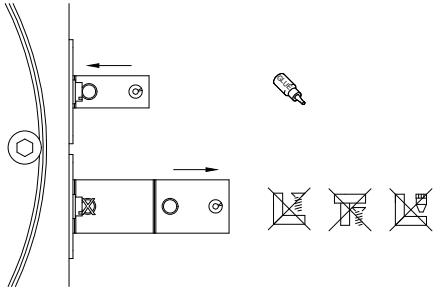

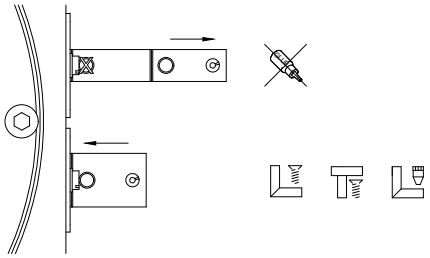

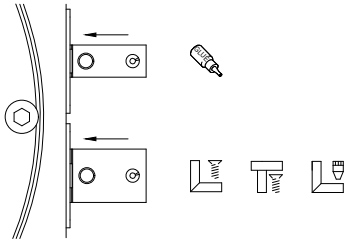

CORNER SCREW JIG

GLUE INJECTION + CORNER CONNECTION 197.F900.00

MASTERLINE 8-Fu

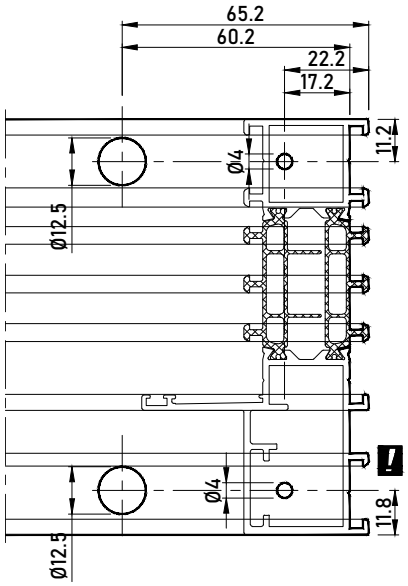

CORNER SCREW JIG

GLUE INJECTION + CORNER CONNECTION 197.F900.00

MASTERLINE 8-Fu

ALGEMEEN PRINCIPE
GENERAL PRINCIPE
GENERAL PRINCIPLE
ALLGEMEIN PRINZIP

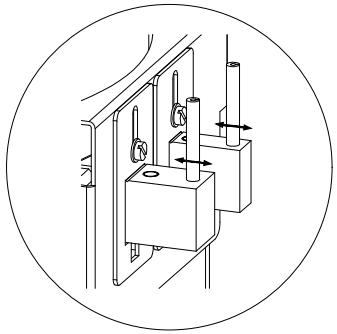



A



B

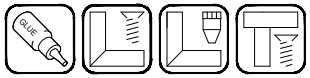

A + B

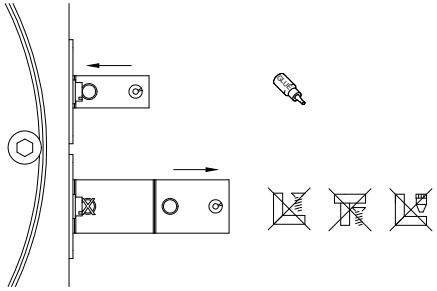

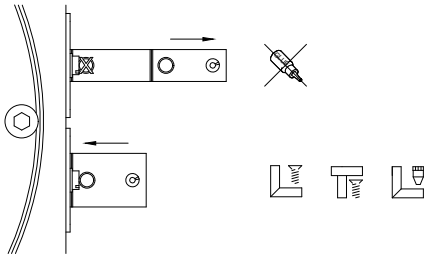

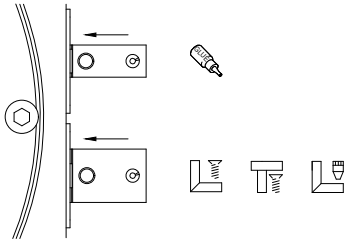

CORNER SCREW JIG

GLUE INJECTION + CORNER CONNECTION 197.F900.00

MASTERLINE 8-Fu

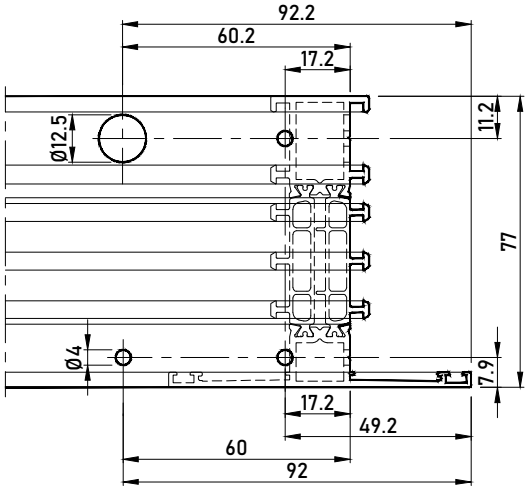

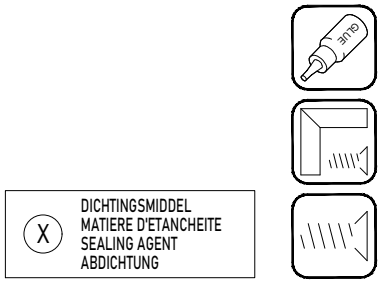

CORNER SCREW JIG

GLUE INJECTION + CORNER CONNECTION 197.F900.00

MASTERLINE 8-Fu

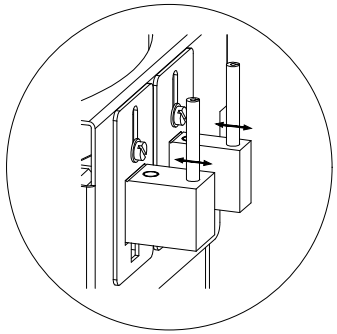

ALGEMEEN PRINCIPE
GENERAL PRINCIPE
GENERAL PRINCIPLE
ALLGEMEIN PRINZIP



A



B

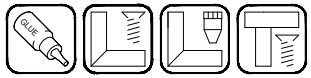

A + B

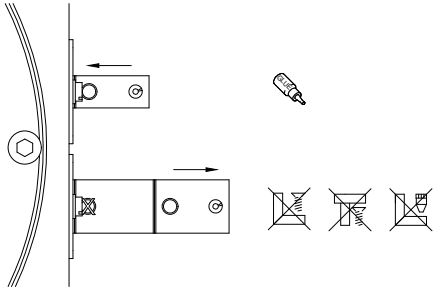

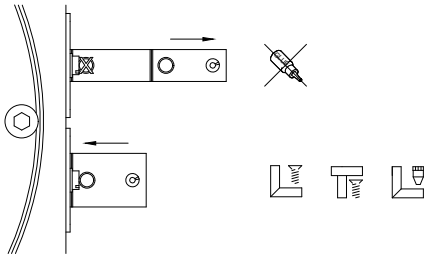

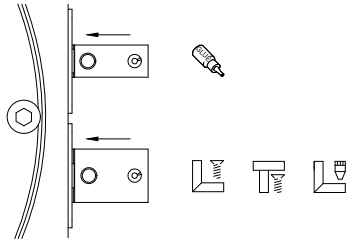

CORNER SCREW JIG

GLUE INJECTION + CORNER CONNECTION 197.D800.00

MASTERLINE 8-Fu

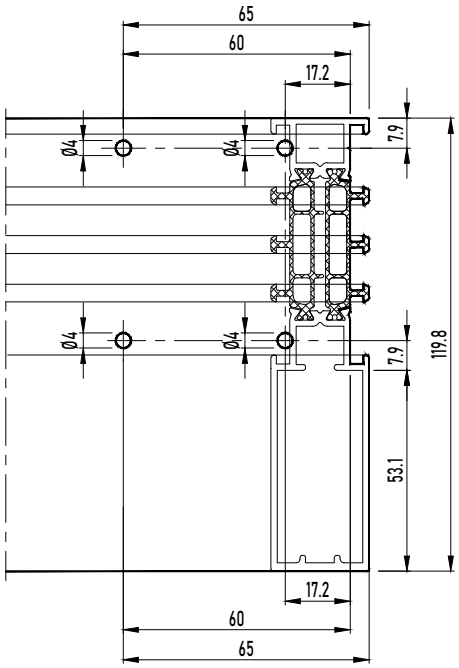

CORNER SCREW JIG

GLUE INJECTION + CORNER CONNECTION 197.D800.00

MASTERLINE 8-Fu

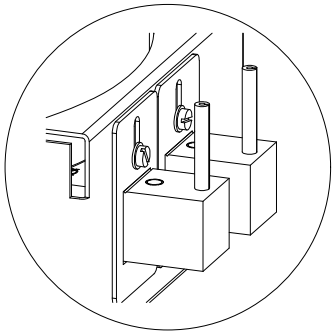

ALGEMEEN PRINCIPE
GENERAL PRINCIPE
GENERAL PRINCIPLE
ALLGEMEIN PRINZIP



A

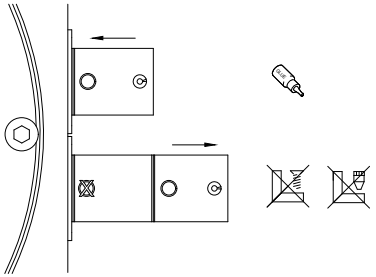

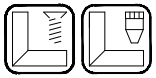

B

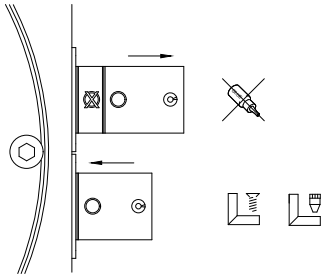



A + B

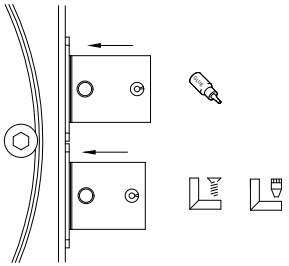

CORNER SCREW JIG

GLUE INJECTION + CORNER CONNECTION 197.D800.00

MASTERLINE 8-Fu

A

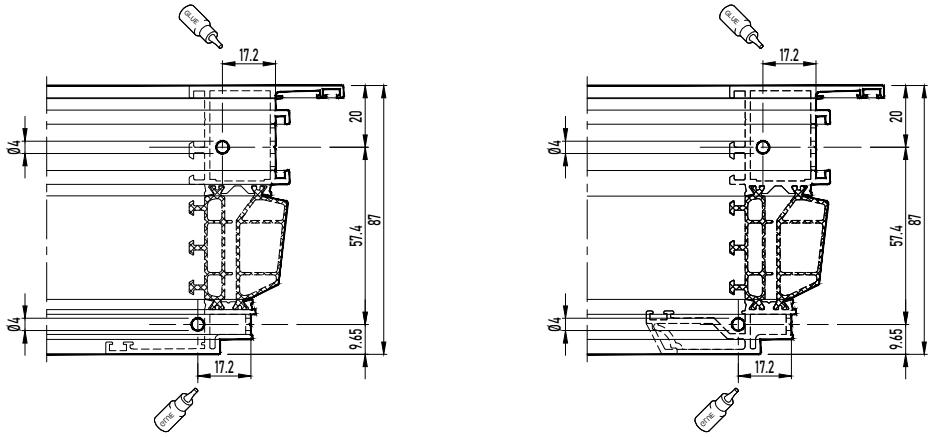

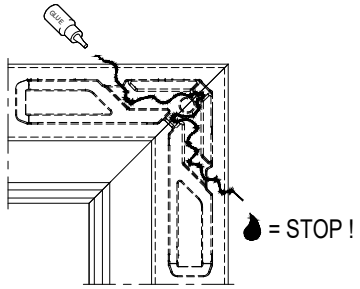

REYNASEAL DUO
REYNASEAL DUO
REYNASEAL DUO
REYNASEAL DUO

LIJMINJECTIE NA VERBINDING
INJECTION DE COLLE APRÈS LA CONNEXION
GLUE INJECTION AFTER CONNECTION
KLEBEINJEKTION NACH DEM ANSCHLUSS

B

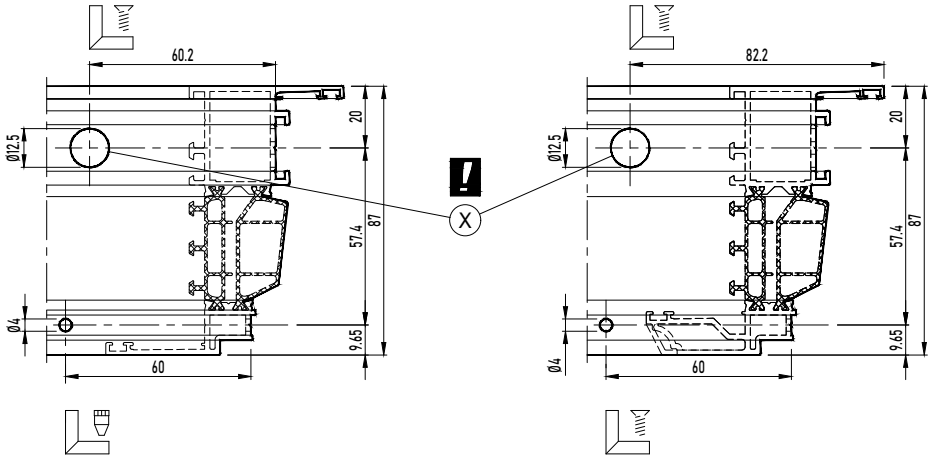

Aanpassing diameter: zie handleiding 197.B700.00 / Modification diamètre: voir manuel 197.B700.00
Change size diameter: see manual 197.B700.00 / Wechsel Durchmesser: siehe Gebrauchsanweisung 197.B700.00

DICHTINGSMIDDEL
MATIERE D'ETANCHEITE
SEALING AGENT
ABDICHTUNG

LIJMINJECTIE NA VERBINDING
INJECTION DE COLLE APRÈS LA CONNEXION
GLUE INJECTION AFTER CONNECTION
KLEBEINJEKTION NACH DEM ANSCHLUSS

CORNER SCREW JIG

GLUE INJECTION + CORNER CONNECTION 197.D800.00

MASTERLINE 8-Fu

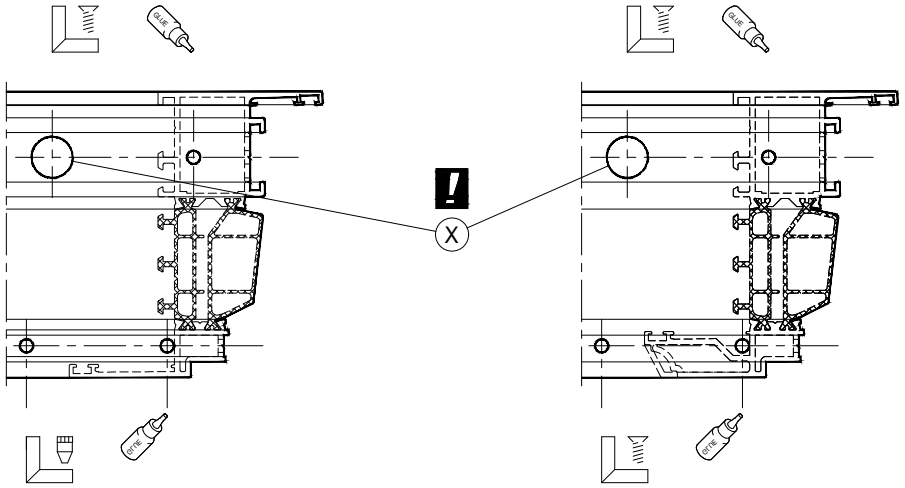

Aanpassing diameter: zie handleiding 197.B600.00
Modification diamètre: voir manuel 197.B600.00
Change size diameter: see manual 197.B600.00
Wechsel Durchmesser: siehe Gebrauchsanweisung 197.B600.00

MONTAGEVOLGORDE L'ORDRE DE MONTAGE THE ORDER OF ASSEMBLY MONTAGEREIHENFOLGE	1 2 3 .

CORNER SCREW JIG

GLUE INJECTION + CORNER CONNECTION 197.D800.00

MASTERLINE 8-Fu

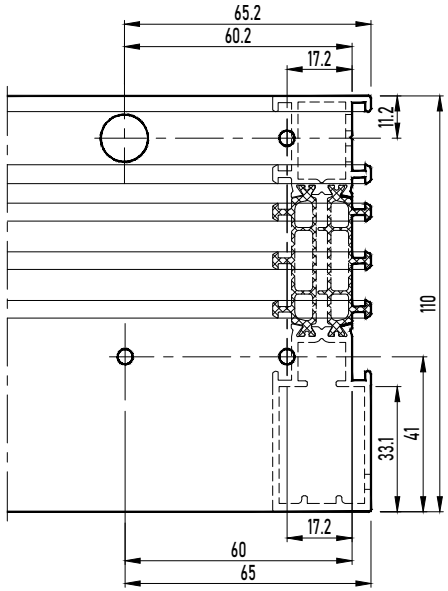

X DICHTINGSMIDDEL
MATIERE D'ETANCHEITE
SEALING AGENT
ABDICHTUNG

CORNER SCREW JIG

GLUE INJECTION + CORNER CONNECTION 197.D800.00

MASTERLINE 8-Fu

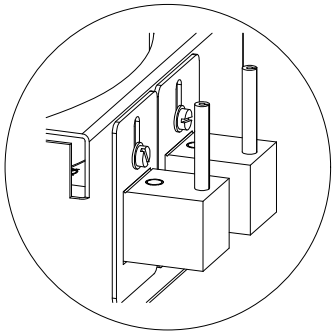

ALGEMEEN PRINCIPE
GENERAL PRINCIPE
GENERAL PRINCIPLE
ALLGEMEIN PRINZIP



A

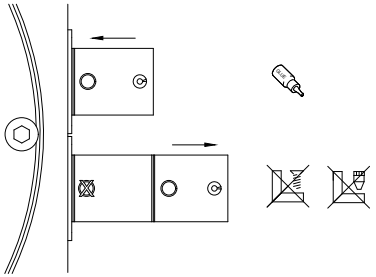

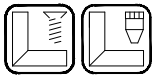

B

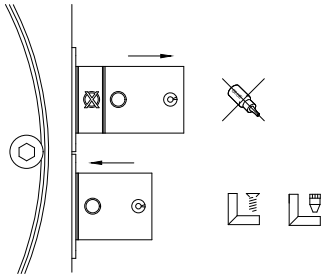



A + B

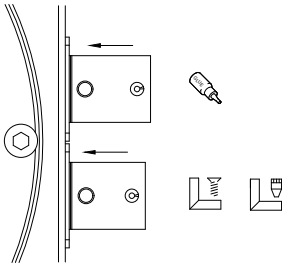

CORNER SCREW JIG

GLUE INJECTION + CORNER CONNECTION 197.D800.00

MASTERLINE 8-Fu

A

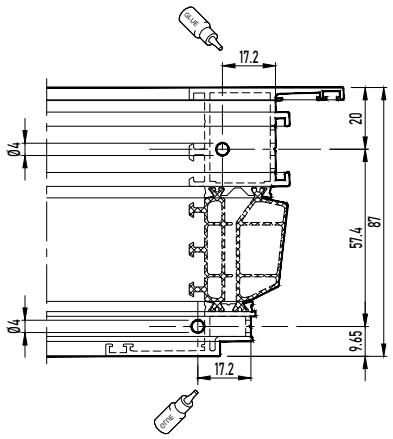

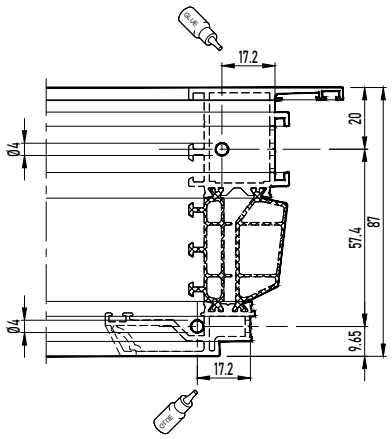

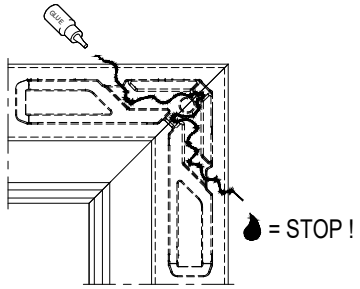

REYNASEAL DUO
REYNASEAL DUO
REYNASEAL DUO
REYNASEAL DUO

LIJMINJECTIE NA VERBINDING
INJECTION DE COLLE APRÈS LA CONNEXION
GLUE INJECTION AFTER CONNECTION
KLEBEINJEKTION NACH DEM ANSCHLUSS

B

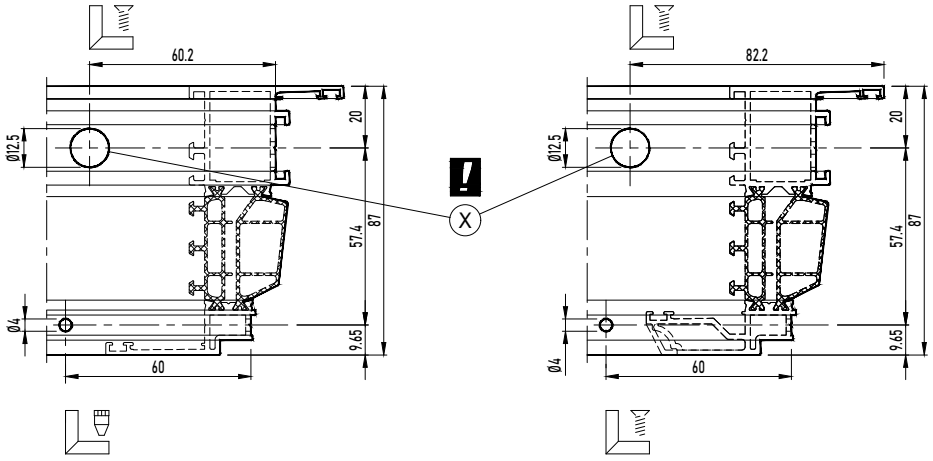

Aanpassing diameter: zie handleiding 197.B700.00 / Modification diamètre: voir manuel 197.B700.00
Change size diameter: see manual 197.B700.00 / Wechsel Durchmesser: siehe Gebrauchsanweisung 197.B700.00

X DICHTINGSMIDDEL
MATIERE D'ETANCHEITE
SEALING AGENT
ABDICHTUNG

LIJMINJECTIE NA VERBINDING
INJECTION DE COLLE APRÈS LA CONNEXION
GLUE INJECTION AFTER CONNECTION
KLEBEINJEKTION NACH DEM ANSCHLUSS

CORNER SCREW JIG

GLUE INJECTION + CORNER CONNECTION 197.D800.00

MASTERLINE 8-Fu

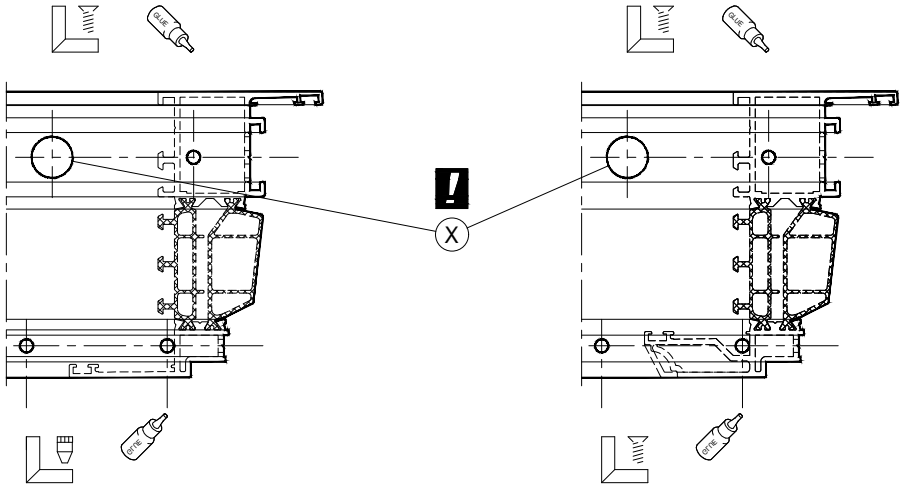

Aanpassing diameter: zie handleiding 197.B600.00
Modification diamètre: voir manuel 197.B600.00
Change size diameter: see manual 197.B600.00
Wechsel Durchmesser: siehe Gebrauchsanweisung 197.B600.00

MONTAGEVOLGORDE L'ORDRE DE MONTAGE THE ORDER OF ASSEMBLY MONTAGEREIHENFOLGE	1 2 3 .

CORNER SCREW JIG

GLUE INJECTION + CORNER CONNECTION 197.D800.00

MASTERLINE 8-Fu

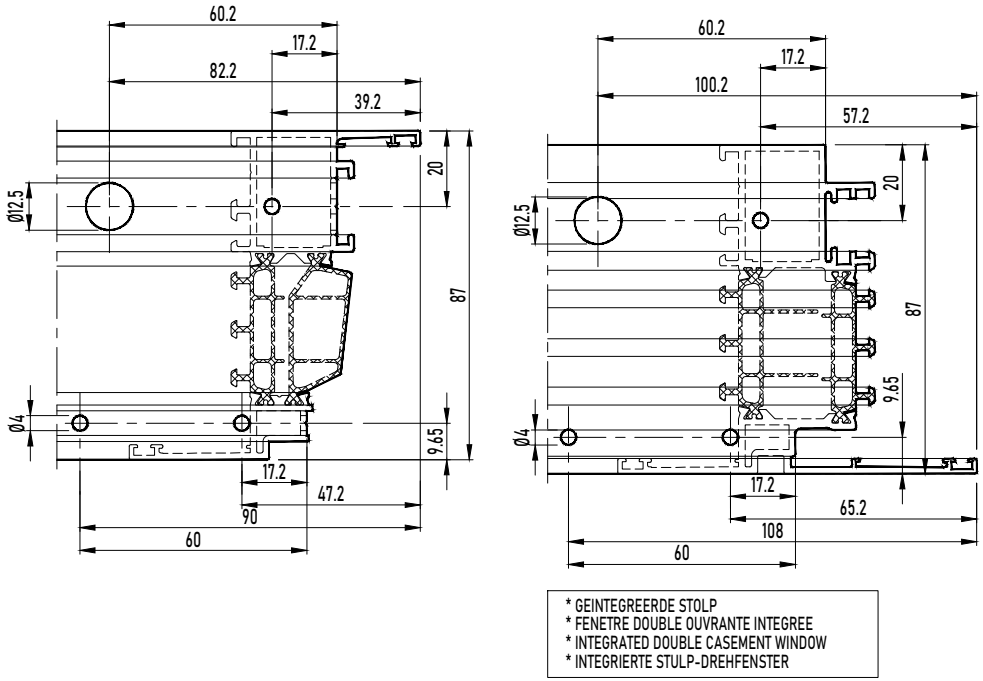

CORNER SCREW JIG

GLUE INJECTION + CORNER CONNECTION 197.D800.00

MASTERLINE 8-Fu

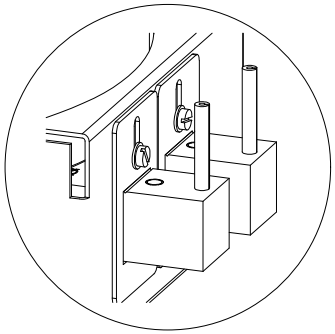

ALGEMEEN PRINCIPE
GENERAL PRINCIPE
GENERAL PRINCIPLE
ALLGEMEIN PRINZIP
GENERAL PRONCIPIO



A

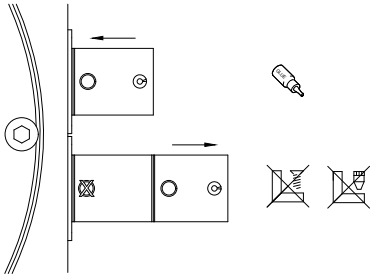

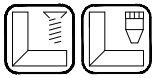

B

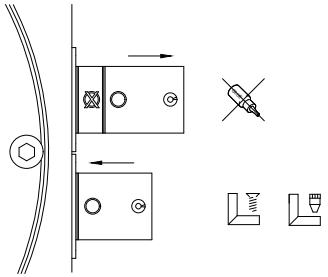



A + B

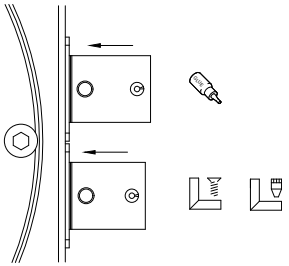

CORNER SCREW JIG

GLUE INJECTION + CORNER CONNECTION 197.D800.00

MASTERLINE 8-Fu

A

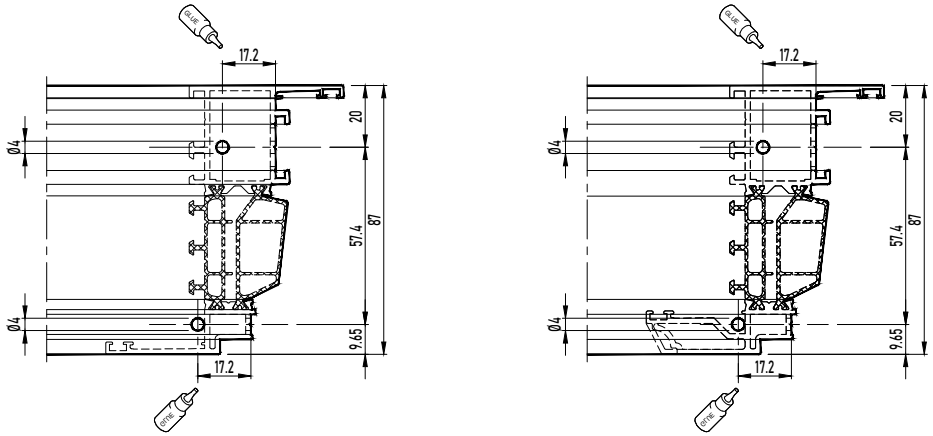

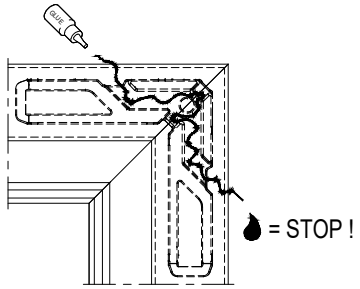

REYNASEAL DUO
REYNASEAL DUO
REYNASEAL DUO
REYNASEAL DUO
REYNASEAL DUO

LIJMINJECTIE NA VERBINDING
INJECTION DE COLLE APRÈS LA CONNEXION
GLUE INJECTION AFTER CONNECTION
KLEBEINJEKTION NACH DEM ANSCHLUSS

B

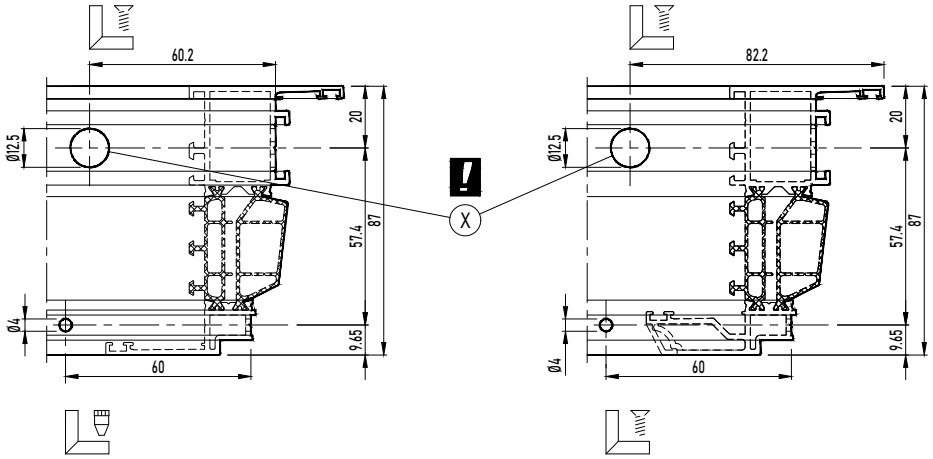

DICHTINGSMIDDEL
MATIERE D'ETANCHEITE
SEALING AGENT
ABDICHTUNG
SELLANTE
MASA USZCZELNIAJACA

LIJMINJECTIE NA VERBINDING
INJECTION DE COLLE APRÈS LA CONNEXION
GLUE INJECTION AFTER CONNECTION
KLEBEINJEKTION NACH DEM ANSCHLUSS

Aanpassing diameter: zie handleiding 197.B700.00 / Modification diamètre: voir manuel 197.B700.00
Change size diameter: see manual 197.B700.00 / Wechsel Durchmesser: siehe Gebrauchsanweisung 197.B700.00

CORNER SCREW JIG

GLUE INJECTION + CORNER CONNECTION 197.D800.00

MASTERLINE 8-Fu

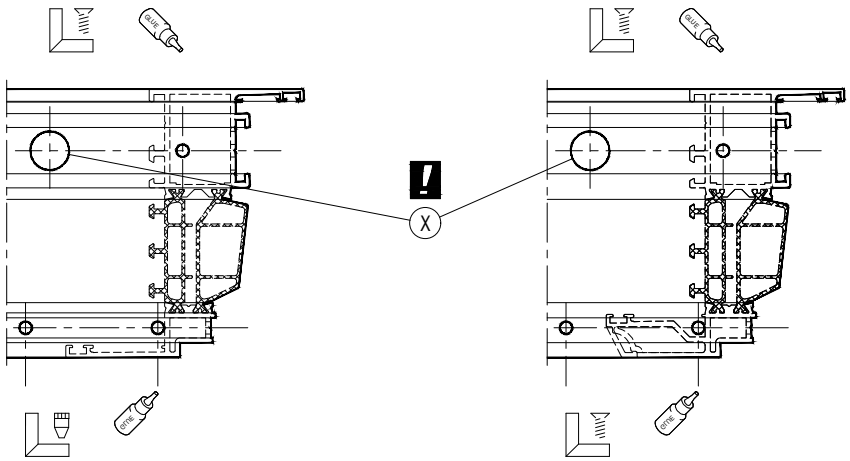

Aanpassing diameter: zie handleiding 197.B600.00
Modification diamètre: voir manuel 197.B600.00
Change size diameter: see manual 197.B600.00
Wechsel Durchmesser: siehe Gebrauchsanweisung 197.B600.00

MONTAGEVOLGORDE L'ORDRE DE MONTAGE THE ORDER OF ASSEMBLY MONTAGEREIHENFOLGE ORDEN DE MONTAJE KOLEJNOSC MONTAZU	1 2 3 .

X	DICHTINGSMIDDEL MATIERE D'ETANCHEITE SEALING AGENT ABDICHTUNG SELLANTE MASA USZCZELNIAJACA

LIJMINJECTIE NA VERBINDING
INJECTION DE COLLE APRÈS LA CONNEXION
GLUE INJECTION AFTER CONNECTION
KLEBEINJEKTION NACH DEM ANSCHLUSS

CORNER SCREW JIG

GLUE INJECTION + CORNER CONNECTION 197.D800.00

MASTERLINE 8-Fu

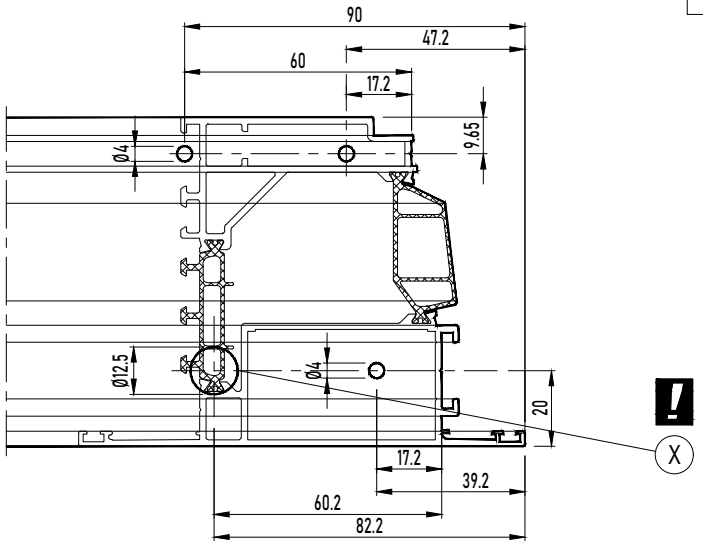

* GEINTEGREERDE STOLP
* FENETRE DOUBLE OUVRANTE INTEGREE
* INTEGRATED DOUBLE CASEMENT WINDOW
* INTEGRIERTE STULP-DREHFENSTER

X DICHTINGSMIDDEL
MATIERE D'ETANCHEITE
SEALING AGENT
ABDICHTUNG
SELLANTE
MASA USZCZELNIAJACA



CORNER SCREW JIG

GLUE INJECTION + CORNER CONNECTION 197.D800.00

MASTERLINE 8-Fu

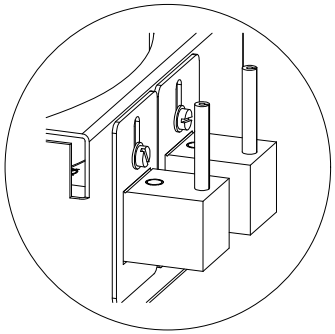

ALGEMEEN PRINCIPE
GENERAL PRINCIPE
GENERAL PRINCIPLE
ALLGEMEIN PRINZIP
GENERAL PRONCIPIO

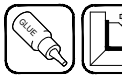

A

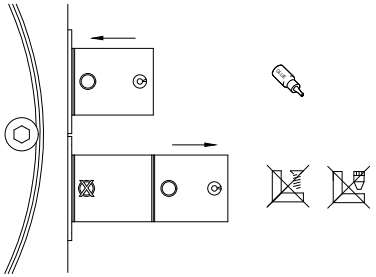

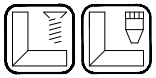

B

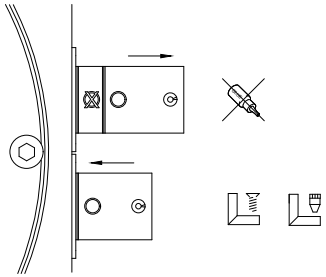



A + B

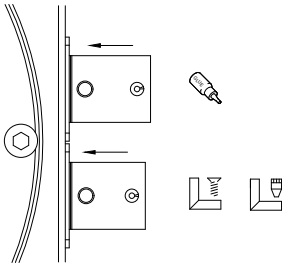

CORNER SCREW JIG

GLUE INJECTION + CORNER CONNECTION 197.D800.00

MASTERLINE 8-Fu

A

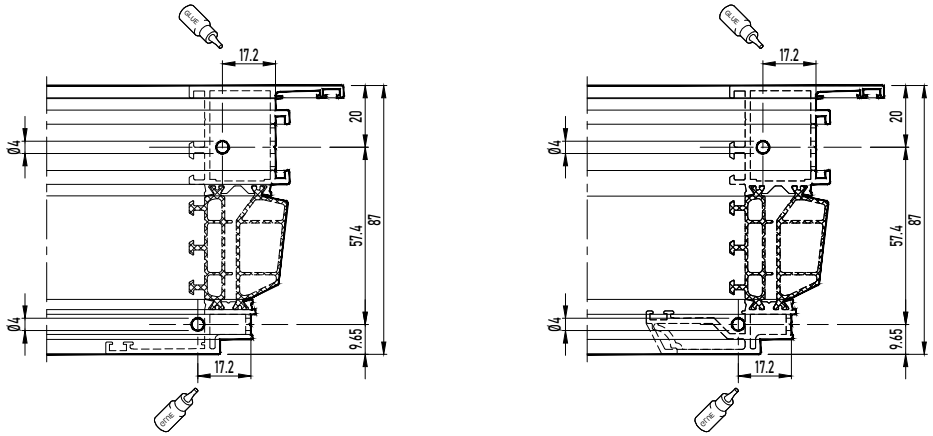

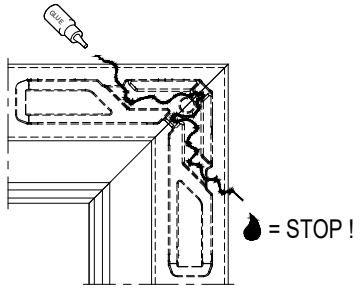

REYNASEAL DUO
REYNASEAL DUO
REYNASEAL DUO
REYNASEAL DUO
REYNASEAL DUO

LIJMINJECTIE NA VERBINDING
INJECTION DE COLLE APRÈS LA CONNEXION
GLUE INJECTION AFTER CONNECTION
KLEBEINJEKTION NACH DEM ANSCHLUSS

B

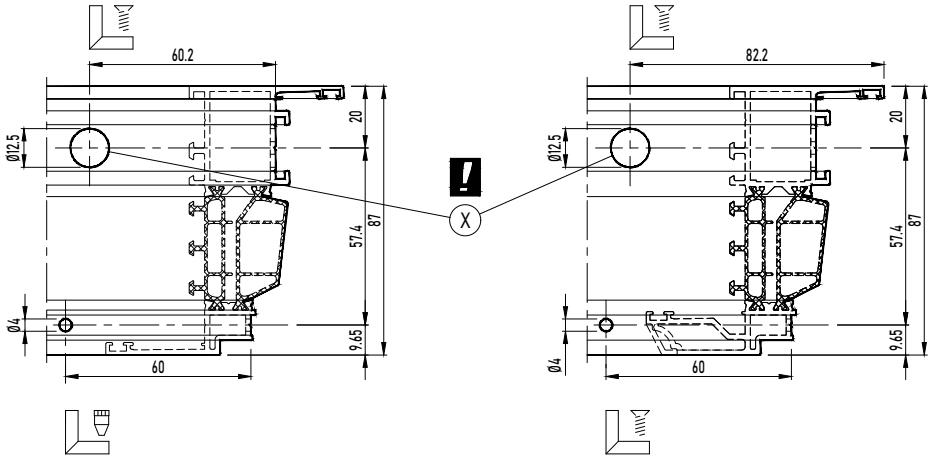

DICHTINGSMIDDEL
MATIERE D'ETANCHEITE
SEALING AGENT
ABDICHTUNG
SELLANTE
MASA USZCZELNIAJACA

LIJMINJECTIE NA VERBINDING
INJECTION DE COLLE APRÈS LA CONNEXION
GLUE INJECTION AFTER CONNECTION
KLEBEINJEKTION NACH DEM ANSCHLUSS

Aanpassing diameter: zie handleiding 197.B700.00 / Modification diamètre: voir manuel 197.B700.00
Change size diameter: see manual 197.B700.00 / Wechsel Durchmesser: siehe Gebrauchsanweisung 197.B700.00

CORNER SCREW JIG

GLUE INJECTION + CORNER CONNECTION 197.D800.00

MASTERLINE 8-Fu

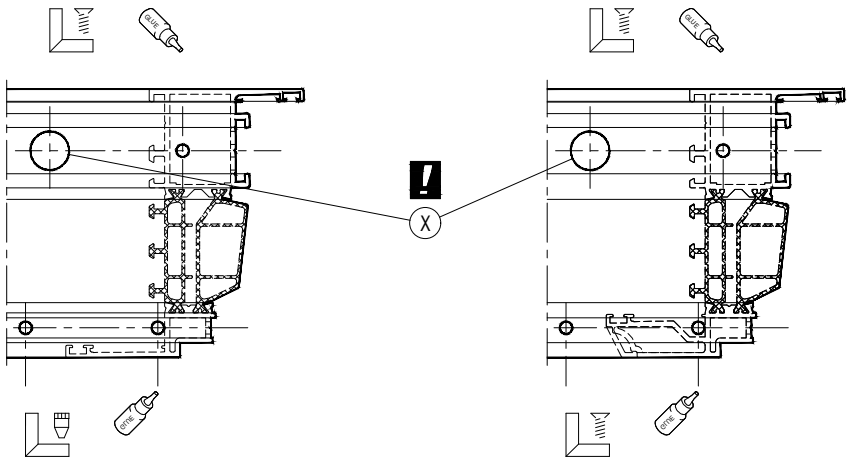

Aanpassing diameter: zie handleiding 197.B600.00
Modification diamètre: voir manuel 197.B600.00
Change size diameter: see manual 197.B600.00
Wechsel Durchmesser: siehe Gebrauchsanweisung 197.B600.00

MONTAGEVOLGORDE L'ORDRE DE MONTAGE THE ORDER OF ASSEMBLY MONTAGEREIHENFOLGE ORDEN DE MONTAJE KOLEJNOSC MONTAZU	1 2 3 .

X	DICHTINGSMIDDEL MATIERE D'ETANCHEITE SEALING AGENT ABDICHTUNG SELLANTE MASA USZCZELNIAJACA

LIJMINJECTIE NA VERBINDING
INJECTION DE COLLE APRÈS LA CONNEXION
GLUE INJECTION AFTER CONNECTION
KLEBEINJEKTION NACH DEM ANSCHLUSS

CORNER SCREW JIG

GLUE INJECTION + CORNER CONNECTION 197.F900.00

MASTERLINE 8-Fu

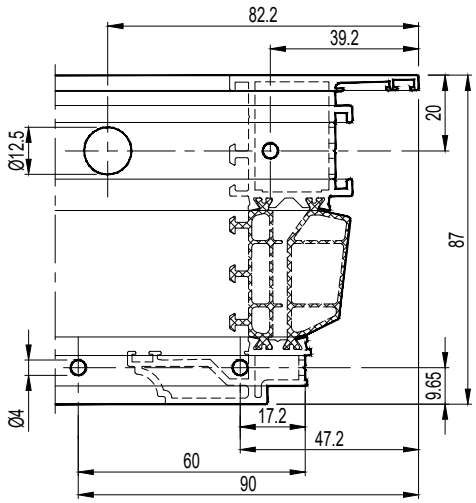

X	DICHTINGSMIDDEL MATIERE D'ETANCHEITE SEALING AGENT ABDICHTUNG

CORNER SCREW JIG

GLUE INJECTION + CORNER CONNECTION 197.F900.00

MASTERLINE 8-Fu

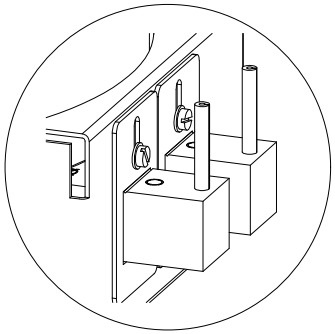

ALGEMEEN PRINCIPE
GENERAL PRINCIPE
GENERAL PRINCIPLE
ALLGEMEIN PRINZIP



A

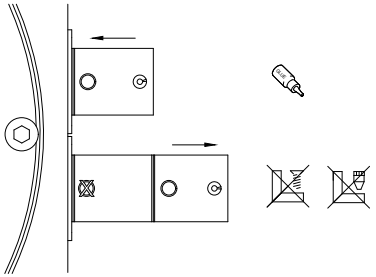

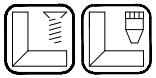

B

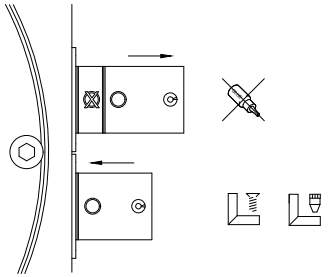



A + B

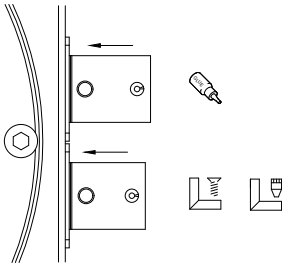

CORNER SCREW JIG

GLUE INJECTION + CORNER CONNECTION 197.F900.00

MASTERLINE 8-Fu

A

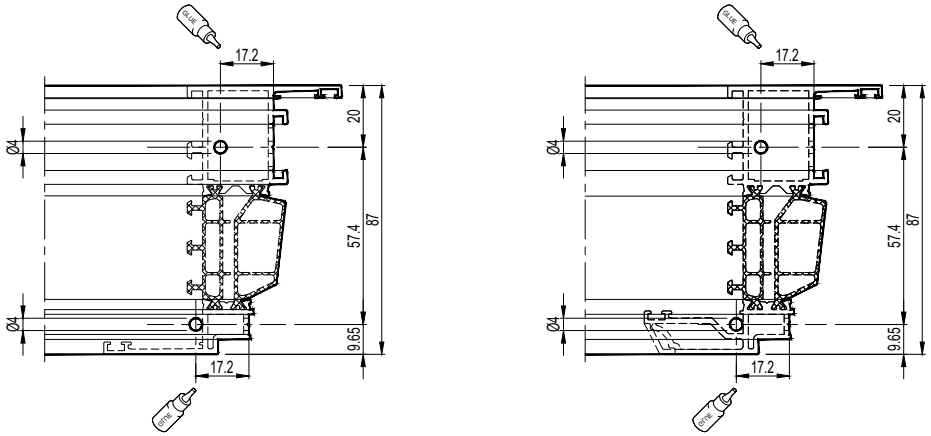

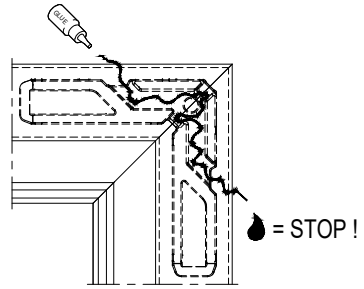

REYNASEAL DUO
REYNASEAL DUO
REYNASEAL DUO
REYNASEAL DUO

LIJMINJECTIE NA VERBINDING
INJECTION DE COLLE APRÈS LA CONNEXION
GLUE INJECTION AFTER CONNECTION
KLEBEINJEKTION NACH DEM ANSCHLUSS

B

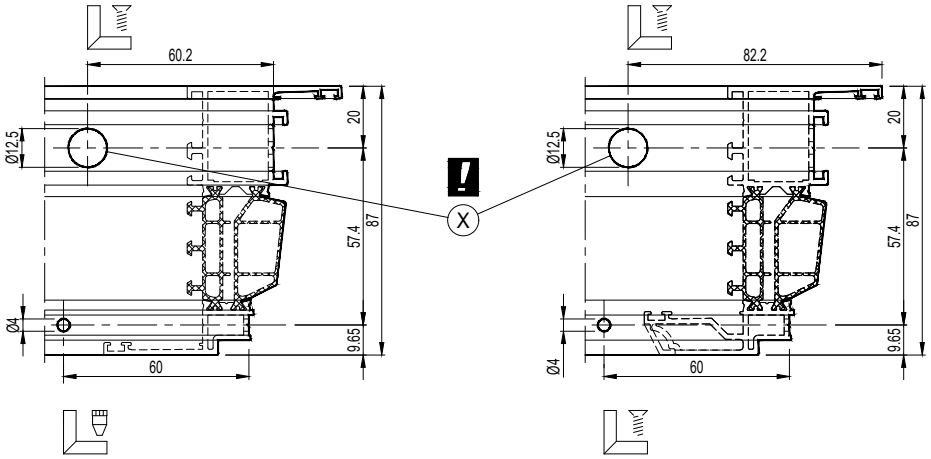

X DICHTINGSMIDDEL
MATIERE D'ETANCHEITE
SEALING AGENT
ABDICHTUNG

LIJMINJECTIE NA VERBINDING
INJECTION DE COLLE APRÈS LA CONNEXION
GLUE INJECTION AFTER CONNECTION
KLEBEINJEKTION NACH DEM ANSCHLUSS

Aanpassing diameter: zie handleiding 197.B700.00 / Modification diamètre: voir manuel 197.B700.00
Change size diameter: see manual 197.B700.00 / Wechsel Durchmesser: siehe Gebrauchsanweisung 197.B700.00

CORNER SCREW JIG

GLUE INJECTION + CORNER CONNECTION 197.F900.00

MASTERLINE 8-Fu

A + B

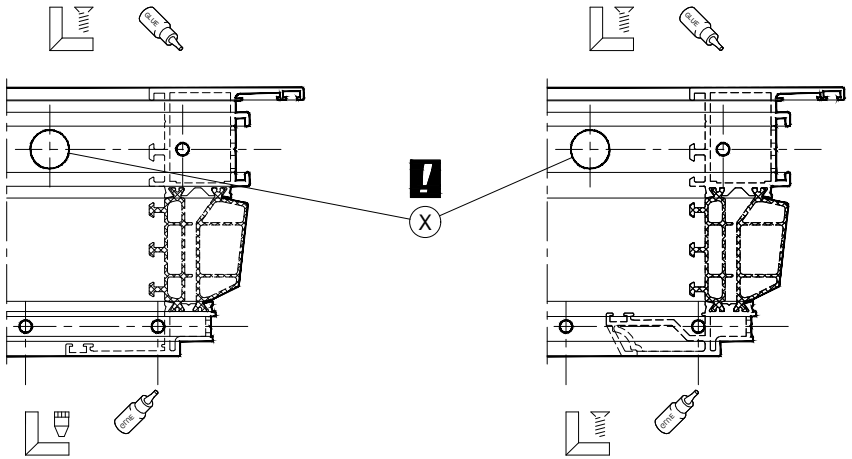



Aanpassing diameter: zie handleiding 197.B600.00
Modification diamètre: voir manuel 197.B600.00
Change size diameter: see manual 197.B600.00
Wechsel Durchmesser: siehe Gebrauchsanweisung 197.B600.00

MONTAGEVOLGORDE
L 'ORDRE DE MONTAGE
THE ORDER OF ASSEMBLY
MONTAGEREIHENFOLGE
1 2 3 .

X DICHTINGSMIDDEL
MATIERE D'ETANCHEITE
SEALING AGENT
ABDICHTUNG

LIJMINJECTIE NA VERBINDING
INJECTION DE COLLE APRÈS LA CONNEXION
GLUE INJECTION AFTER CONNECTION
KLEBEINJEKTION NACH DEM ANSCHLUSS

CORNER SCREW JIG

GLUE INJECTION + CORNER CONNECTION 197.F900.00

MASTERLINE 8-Fu

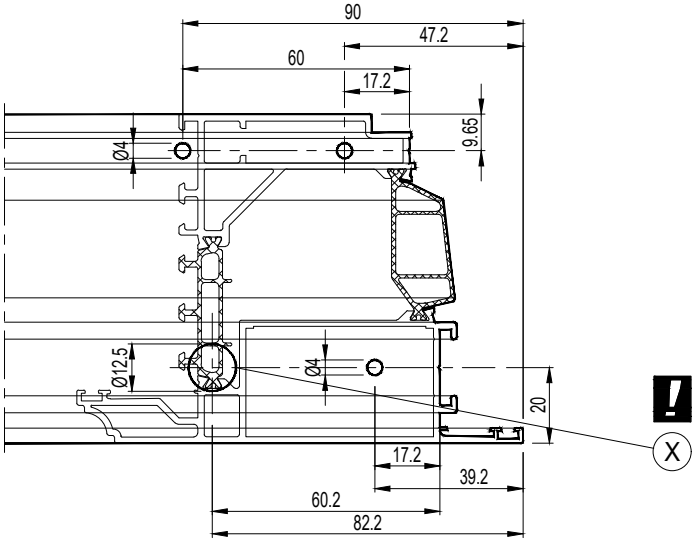

CORNER SCREW JIG

GLUE INJECTION + CORNER CONNECTION 197.F900.00

MASTERLINE 8-Fu

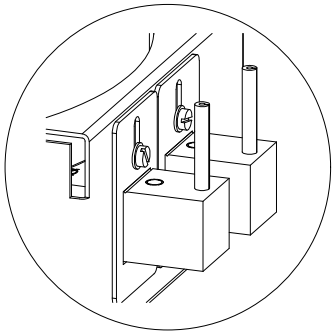

ALGEMEEN PRINCIPE
GENERAL PRINCIPE
GENERAL PRINCIPLE
ALLGEMEIN PRINZIP



A

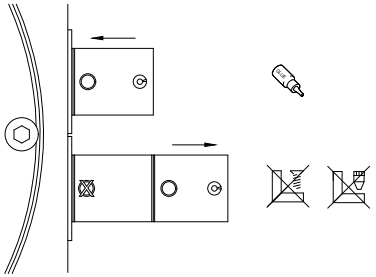

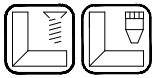

B

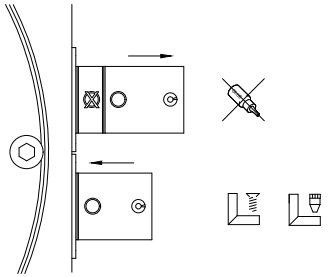



A + B

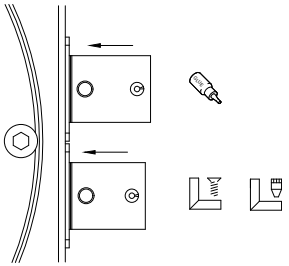

CORNER SCREW JIG

GLUE INJECTION + CORNER CONNECTION 197.F900.00

MASTERLINE 8-Fu

A

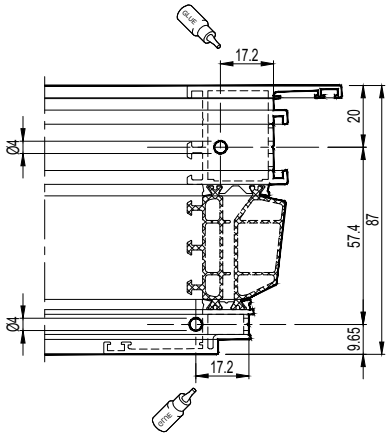

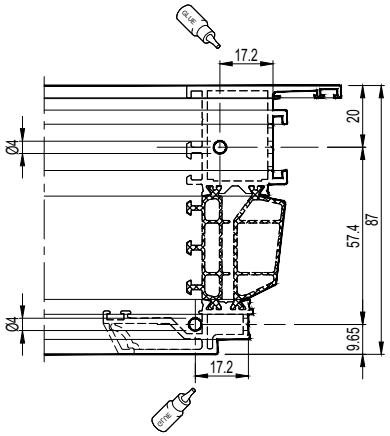

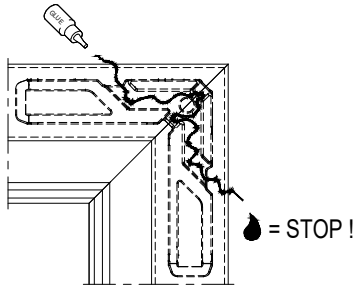

REYNASEAL DUO
REYNASEAL DUO
REYNASEAL DUO
REYNASEAL DUO

LIJMINJECTIE NA VERBINDING
INJECTION DE COLLE APRÈS LA CONNEXION
GLUE INJECTION AFTER CONNECTION
KLEBEINJEKTION NACH DEM ANSCHLUSS

B

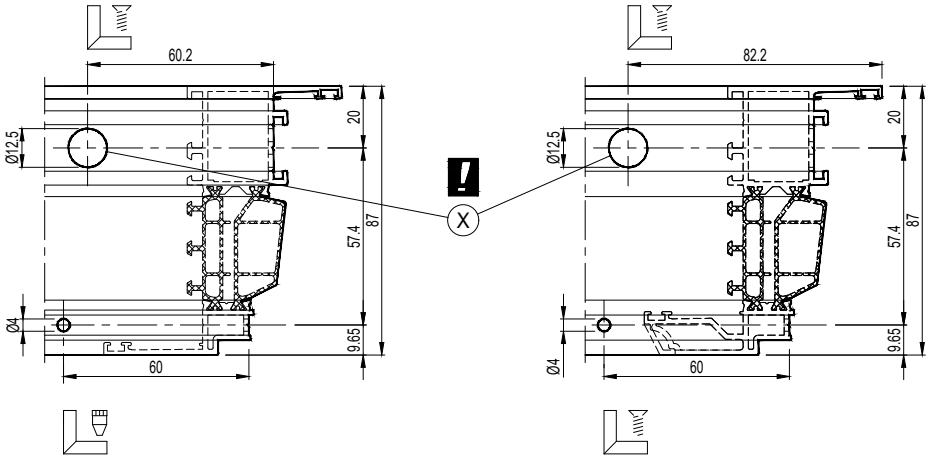

Aanpassing diameter: zie handleiding 197.B700.00 / Modification diamètre: voir manuel 197.B700.00
Change size diameter: see manual 197.B700.00 / Wechsel Durchmesser: siehe Gebrauchsanweisung 197.B700.00

X DICHTINGSMIDDEL
MATIERE D'ETANCHEITE
SEALING AGENT
ABDICHTUNG

LIJMINJECTIE NA VERBINDING
INJECTION DE COLLE APRÈS LA CONNEXION
GLUE INJECTION AFTER CONNECTION
KLEBEINJEKTION NACH DEM ANSCHLUSS

CORNER SCREW JIG

GLUE INJECTION + CORNER CONNECTION 197.F900.00

MASTERLINE 8-Fu

A + B

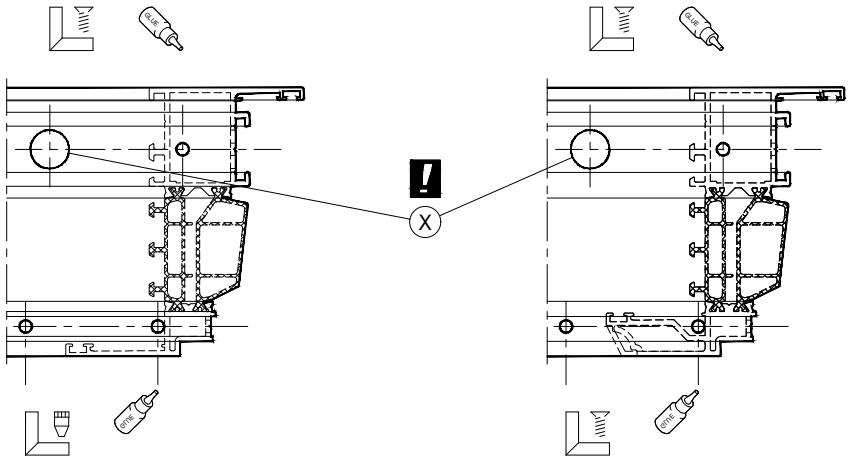



Aanpassing diameter: zie handleiding 197.B600.00
Modification diamètre: voir manuel 197.B600.00
Change size diameter: see manual 197.B600.00
Wechsel Durchmesser: siehe Gebrauchsanweisung 197.B600.00

MONTAGEVOLGORDE L 'ORDRE DE MONTAGE THE ORDER OF ASSEMBLY MONTAGEREIHENFOLGE	1 2 3 .

X	DICHTINGSMIDDEL MATIERE D'ETANCHEITE SEALING AGENT ABDICHTUNG

LIJMINJECTIE NA VERBINDING INJECTION DE COLLE APRÈS LA CONNEXION GLUE INJECTION AFTER CONNECTION KLEBEINJEKTION NACH DEM ANSCHLUSS



CORNER SCREW JIG

GLUE INJECTION + CORNER CONNECTION 197.D800.00 | 097.0865.00

MASTERLINE 8-Fu

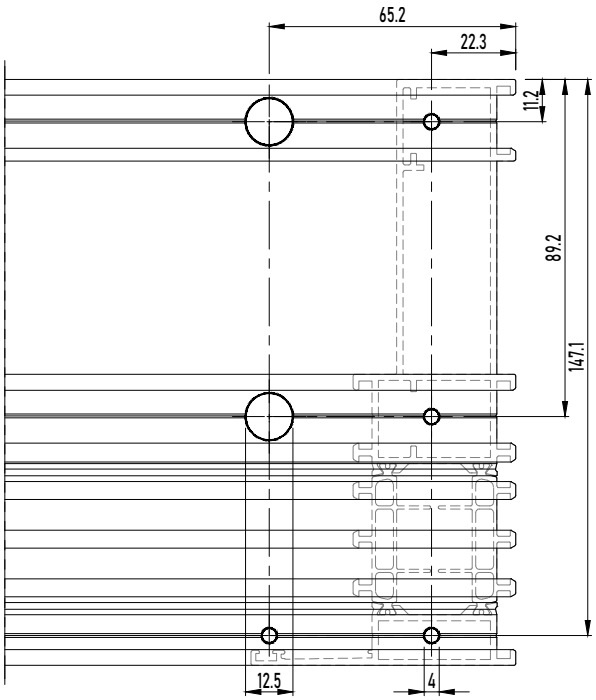

CORNER SCREW JIG

GLUE INJECTION + CORNER CONNECTION 197.D800.00 | 097.0865.00

MASTERLINE 8-Fu

A

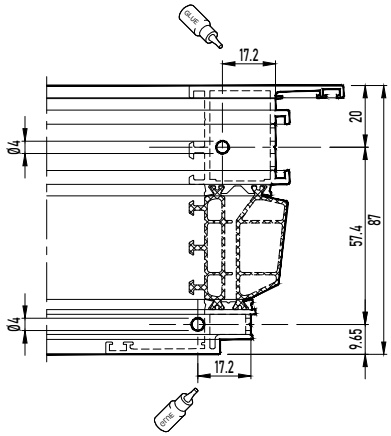

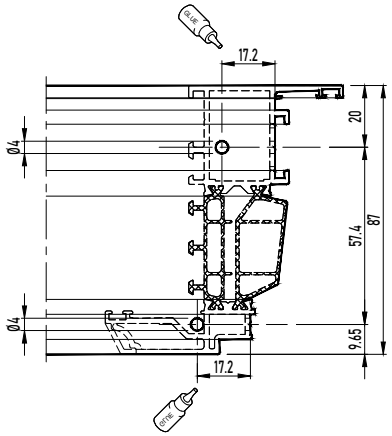

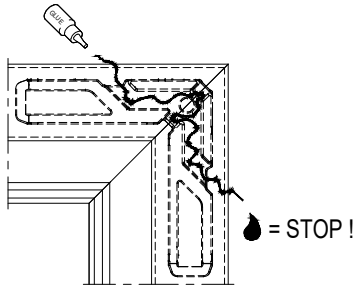



REYNASEAL DUO
REYNASEAL DUO
REYNASEAL DUO
REYNASEAL DUO

LIJMINJECTIE NA VERBINDING
INJECTION DE COLLE APRÈS LA CONNEXION
GLUE INJECTION AFTER CONNECTION
KLEBEINJEKTION NACH DEM ANSCHLUSS

B

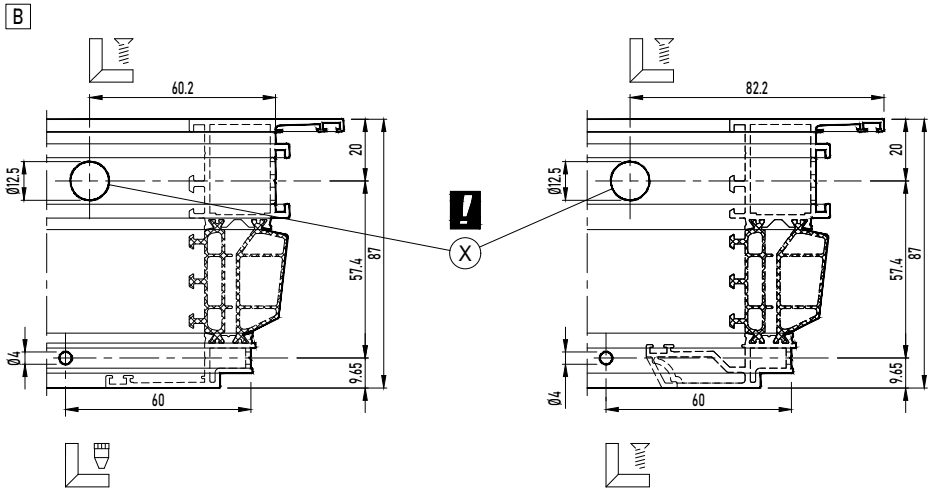

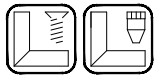

Aanpassing diameter: zie handleiding 197.B700.00 / Modification diamètre: voir manuel 197.B700.00
Change size diameter: see manual 197.B700.00 / Wechsel Durchmesser: siehe Gebrauchsanweisung 197.B700.00

X DICHTINGSMIDDEL
MATIERE D'ETANCHEITE
SEALING AGENT
ABDICHTUNG

LIJMINJECTIE NA VERBINDING
INJECTION DE COLLE APRÈS LA CONNEXION
GLUE INJECTION AFTER CONNECTION
KLEBEINJEKTION NACH DEM ANSCHLUSS



CORNER SCREW JIG

GLUE INJECTION + CORNER CONNECTION 197.D800.00 | 097.0865.00

MASTERLINE 8-Fu

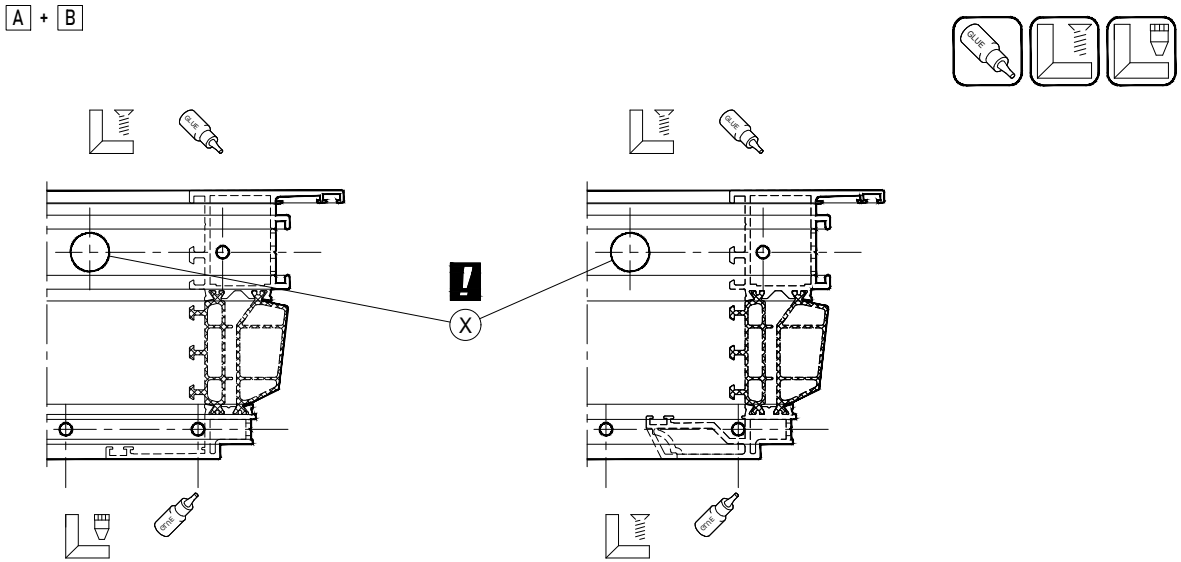

Aanpassing diameter: zie handleiding 197.B600.00
Modification diamètre: voir manuel 197.B600.00
Change size diameter: see manual 197.B600.00
Wechsel Durchmesser: siehe Gebrauchsanweisung 197.B600.00

MONTAGEVOLGORDE
L 'ORDRE DE MONTAGE
THE ORDER OF ASSEMBLY
MONTAGEREIHENFOLGE
1 2 3 .

X DICHTINGSMIDDEL
MATIERE D'ETANCHEITE
SEALING AGENT
ABDICHTUNG

LIJMINJECTIE NA VERBINDING
INJECTION DE COLLE APRÈS LA CONNEXION
GLUE INJECTION AFTER CONNECTION
KLEBEINJEKTION NACH DEM ANSCHLUSS

CORNER SCREW JIG

GLUE INJECTION + CORNER CONNECTION 197.F900.00

MASTERLINE 8-Fu

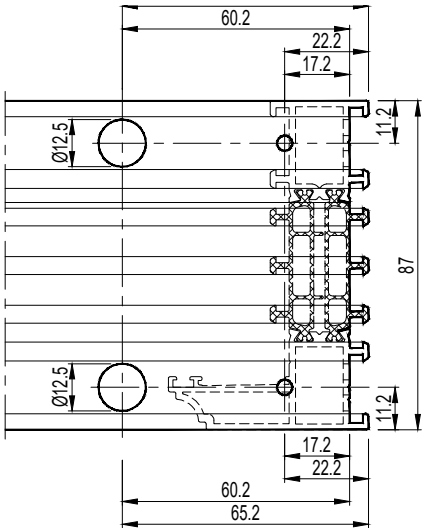

CORNER SCREW JIG

GLUE INJECTION + CORNER CONNECTION 197.F900.00

MASTERLINE 8-Fu

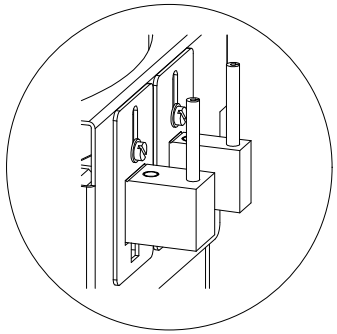

ALGEMEEN PRINCIPE
GENERAL PRINCIPE
GENERAL PRINCIPLE
ALLGEMEIN PRINZIP



A



B

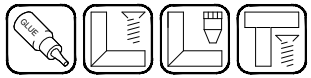

A + B

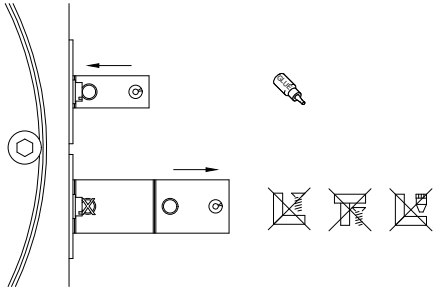

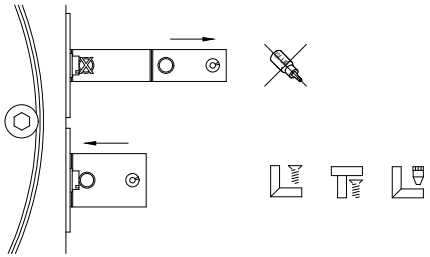

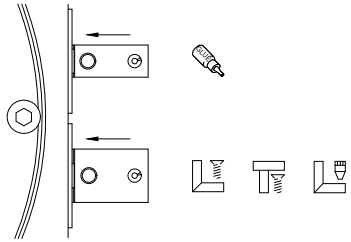

CORNER SCREW JIG

GLUE INJECTION + CORNER CONNECTION 197.F900.00

MASTERLINE 8-Fu

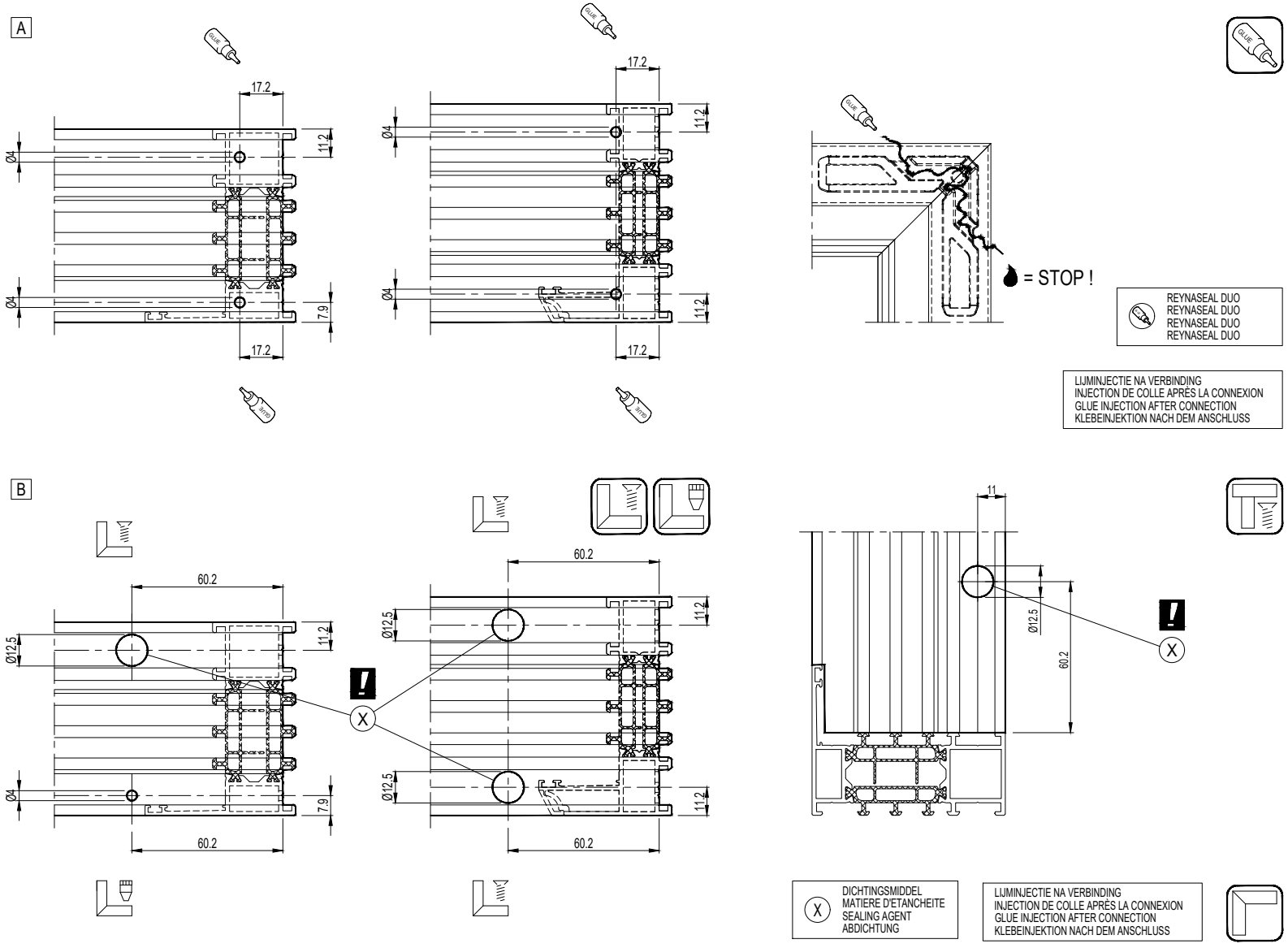

CORNER SCREW JIG

GLUE INJECTION + CORNER CONNECTION 197.F900.00

MASTERLINE 8-Fu

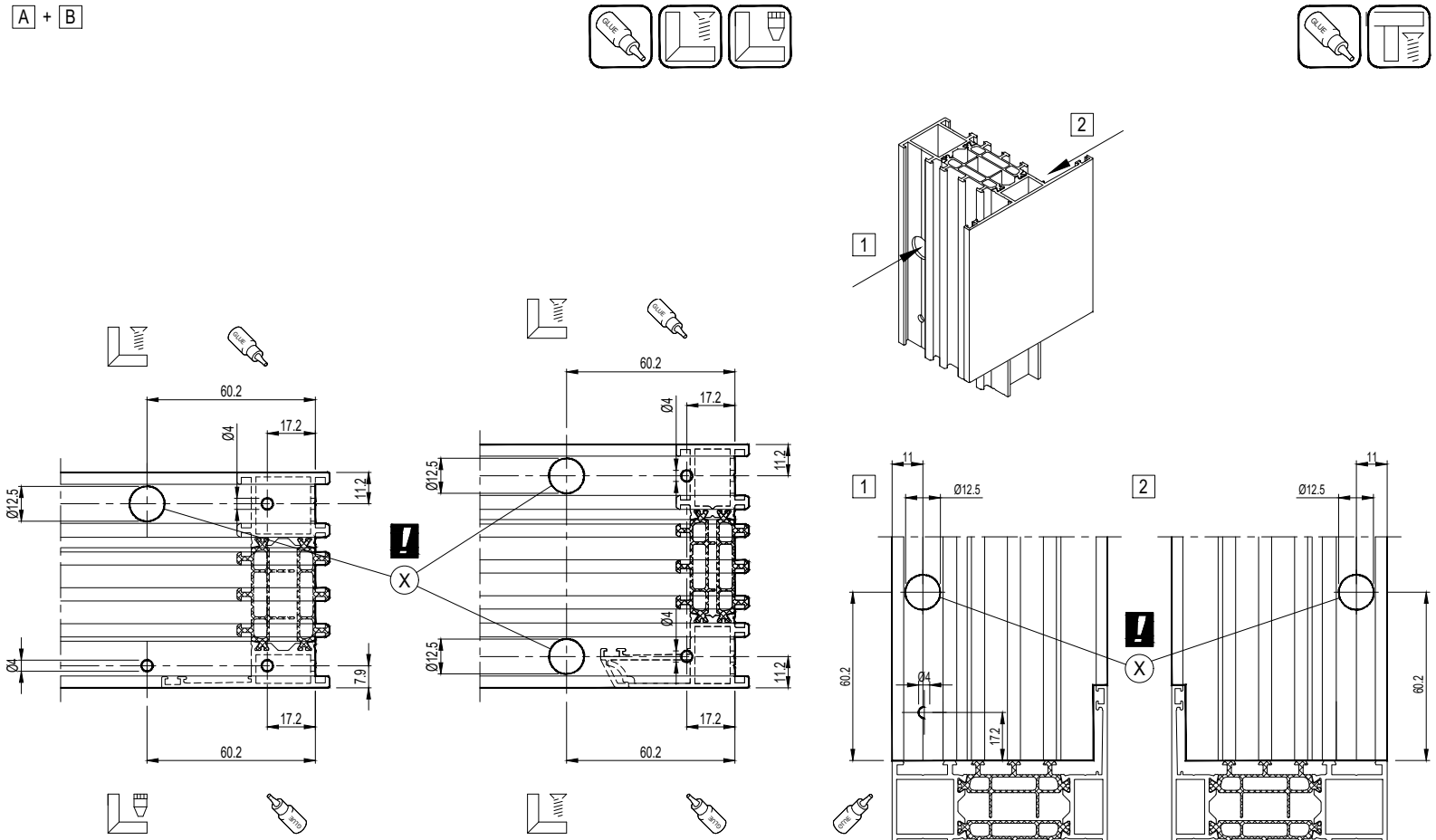

Aanpassing diameter: zie handleiding 197.F900.00
Modification diamètre: voir manuel 197.F900.00
Change size diameter: see manual 197.F900.00
Wechsel Durchmesser: siehe Gebrauchsanweisung 197.F900.00

MONTAGEVOLGORDE L 'ORDRE DE MONTAGE THE ORDER OF ASSEMBLY MONTAGEREIHENFOLGE	1 2 3 .

X	DICHTINGSMIDDEL MATIERE D'ETANCHEITE SEALING AGENT ABDICHTUNG

LIJMINJECTIE NA VERBINDING
INJECTION DE COLLE APRÈS LA CONNEXION
GLUE INJECTION AFTER CONNECTION
KLEBEINJEKTION NACH DEM ANSCHLUSS

CORNER SCREW JIG

GLUE INJECTION + CORNER CONNECTION 197.D800.00

MASTERLINE 8-Fu

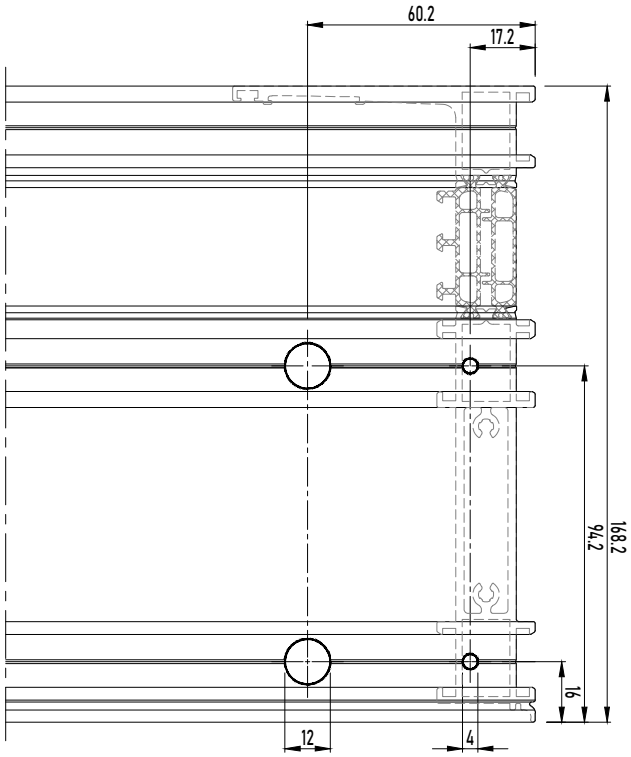

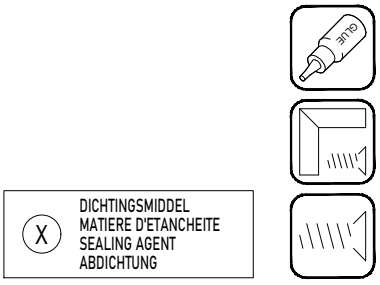

CORNER SCREW JIG

GLUE INJECTION + CORNER CONNECTION 197.D800.00

MASTERLINE 8-Fu

A

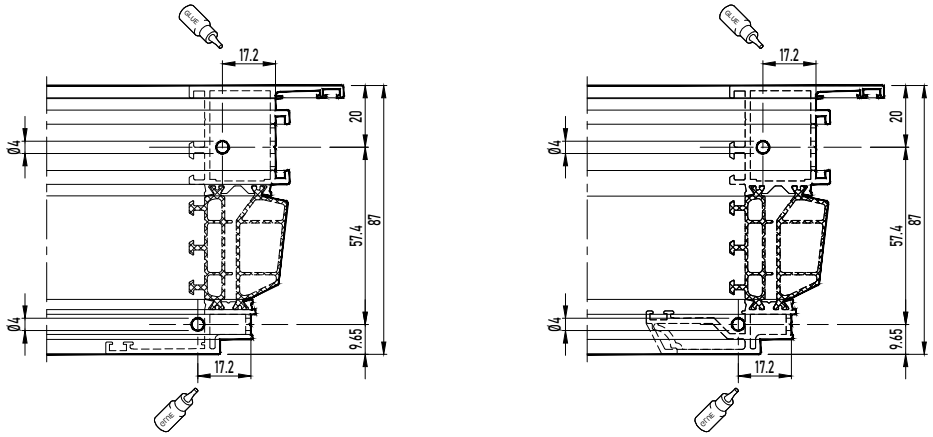

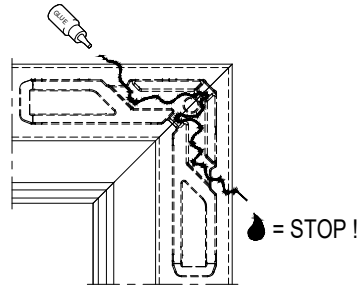

REYNASEAL DUO
REYNASEAL DUO
REYNASEAL DUO
REYNASEAL DUO

LIJMINJECTIE NA VERBINDING
INJECTION DE COLLE APRÈS LA CONNEXION
GLUE INJECTION AFTER CONNECTION
KLEBEINJEKTION NACH DEM ANSCHLUSS

B

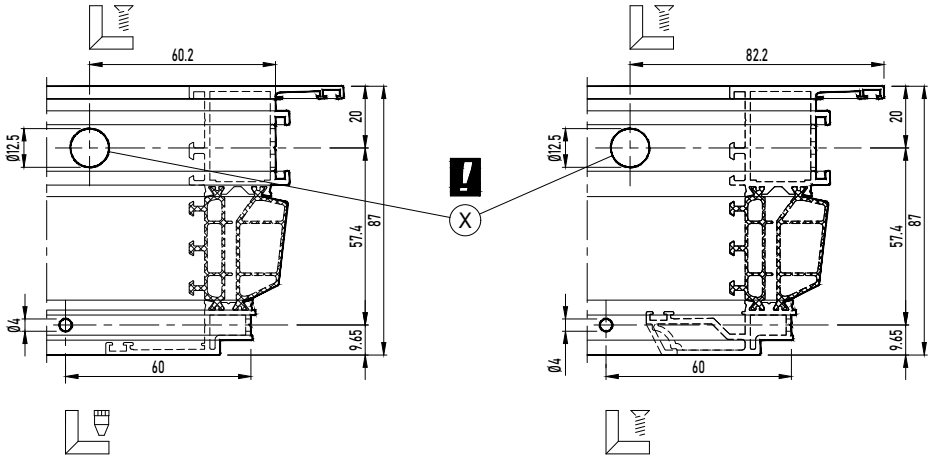

Aanpassing diameter: zie handleiding 197.B700.00 / Modification diamètre: voir manuel 197.B700.00
Change size diameter: see manual 197.B700.00 / Wechsel Durchmesser: siehe Gebrauchsanweisung 197.B700.00

X DICHTINGSMIDDEL
MATIERE D'ETANCHEITE
SEALING AGENT
ABDICHTUNG

LIJMINJECTIE NA VERBINDING
INJECTION DE COLLE APRÈS LA CONNEXION
GLUE INJECTION AFTER CONNECTION
KLEBEINJEKTION NACH DEM ANSCHLUSS

CORNER SCREW JIG

GLUE INJECTION + CORNER CONNECTION 197.D800.00

MASTERLINE 8-Fu

A + B

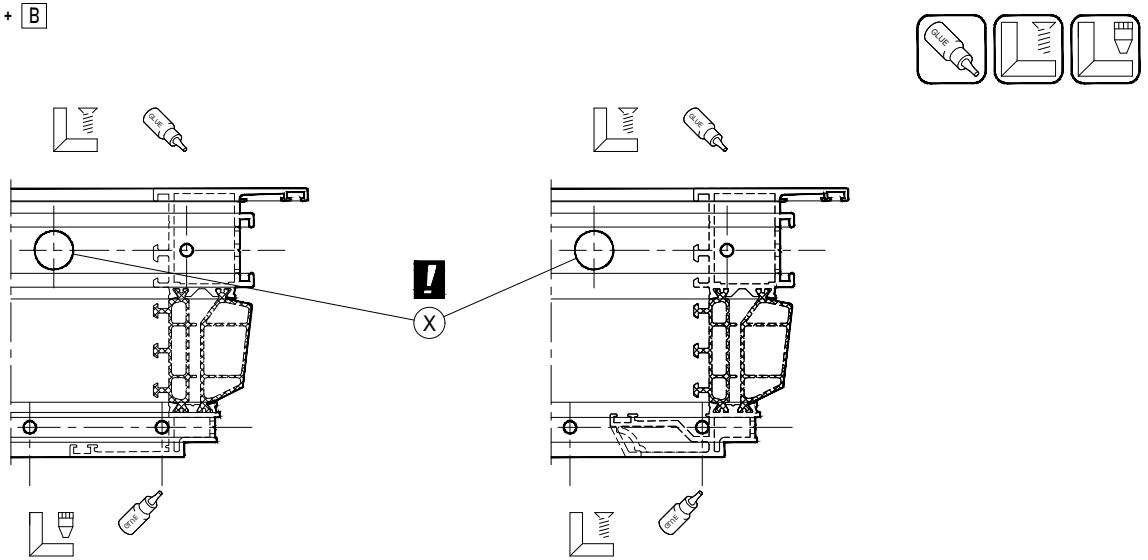

Aanpassing diameter: zie handleiding 197.B600.00
Modification diamètre: voir manuel 197.B600.00
Change size diameter: see manual 197.B600.00
Wechsel Durchmesser: siehe Gebrauchsanweisung 197.B600.00

MONTAGEVOLGORDE L 'ORDRE DE MONTAGE THE ORDER OF ASSEMBLY MONTAGEREIHENFOLGE	1 2 3 .
X	DICHTINGSMIDDEL MATIERE D'ETANCHEITE SEALING AGENT ABDICHTUNG
LIJMINJECTIE NA VERBINDING INJECTION DE COLLE APRÈS LA CONNEXION GLUE INJECTION AFTER CONNECTION KLEBEINJEKTION NACH DEM ANSCHLUSS	

CORNER SCREW JIG

GLUE INJECTION + CORNER CONNECTION 197.F900.00

MASTERLINE 8-Fu

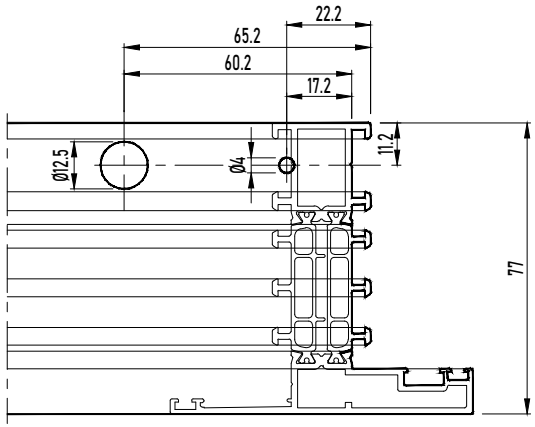

CORNER SCREW JIG

GLUE INJECTION + CORNER CONNECTION 197.F900.00

MASTERLINE 8-Fu

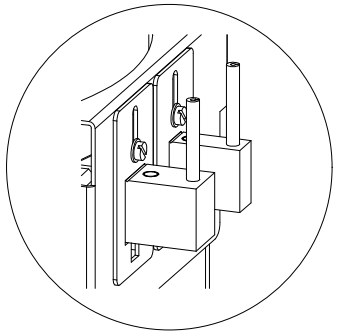

ALGEMEEN PRINCIPE
GENERAL PRINCIPE
GENERAL PRINCIPLE
ALLGEMEIN PRINZIP



A

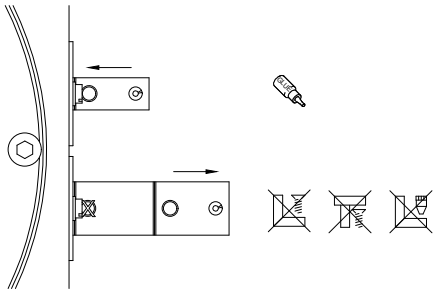



B

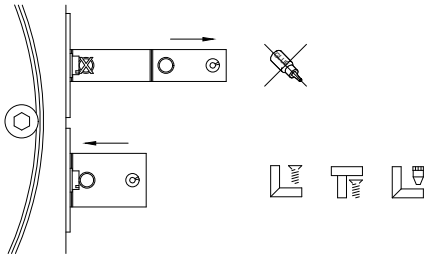

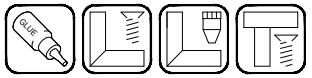

A + B

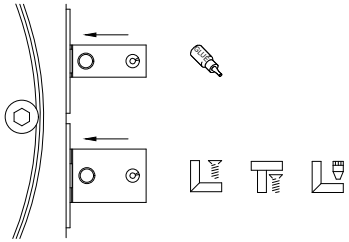

CORNER SCREW JIG

GLUE INJECTION + CORNER CONNECTION 197.F900.00

MASTERLINE 8-Fu

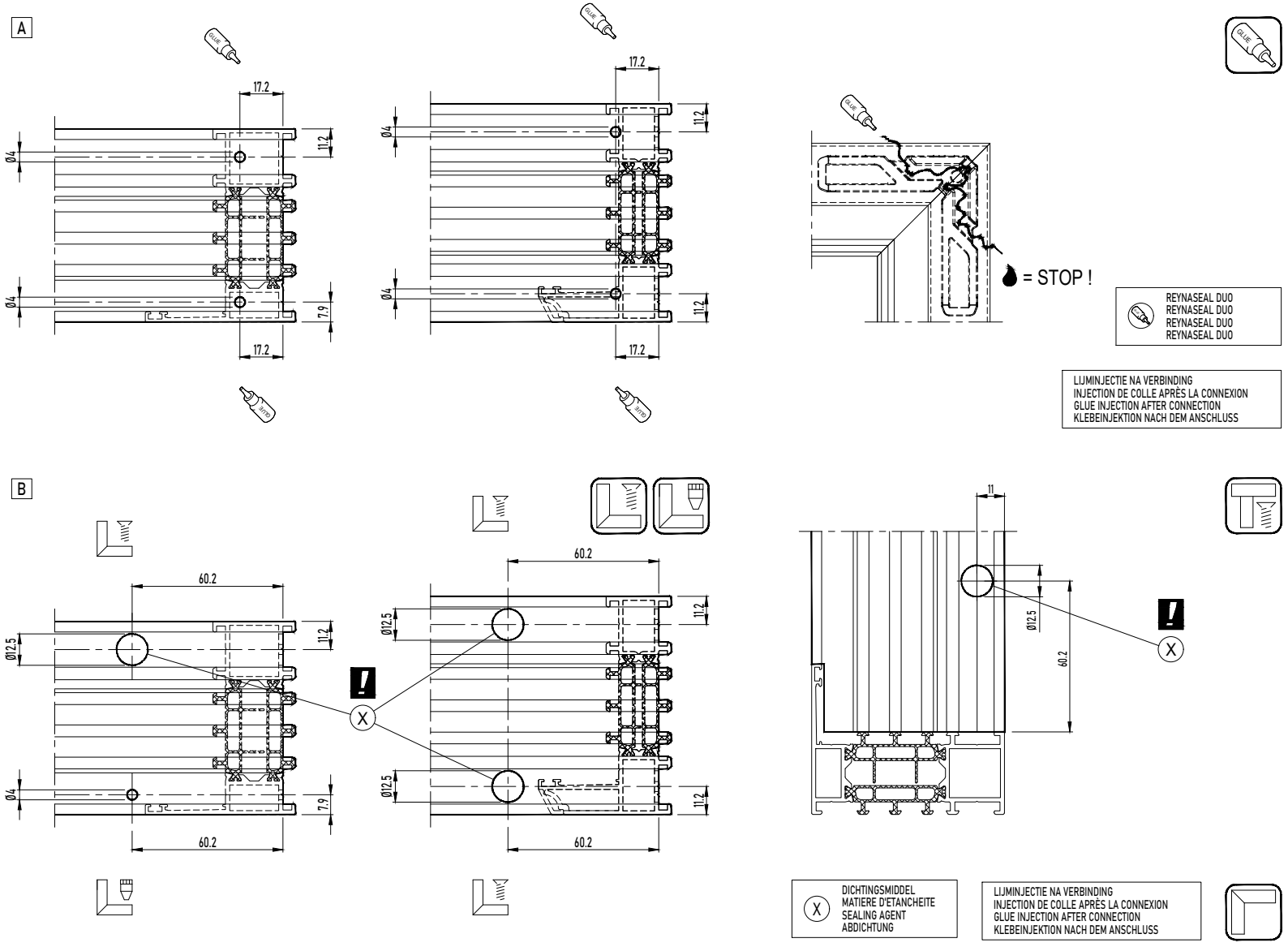

CORNER SCREW JIG

GLUE INJECTION + CORNER CONNECTION 197.F900.00

MASTERLINE 8-Fu

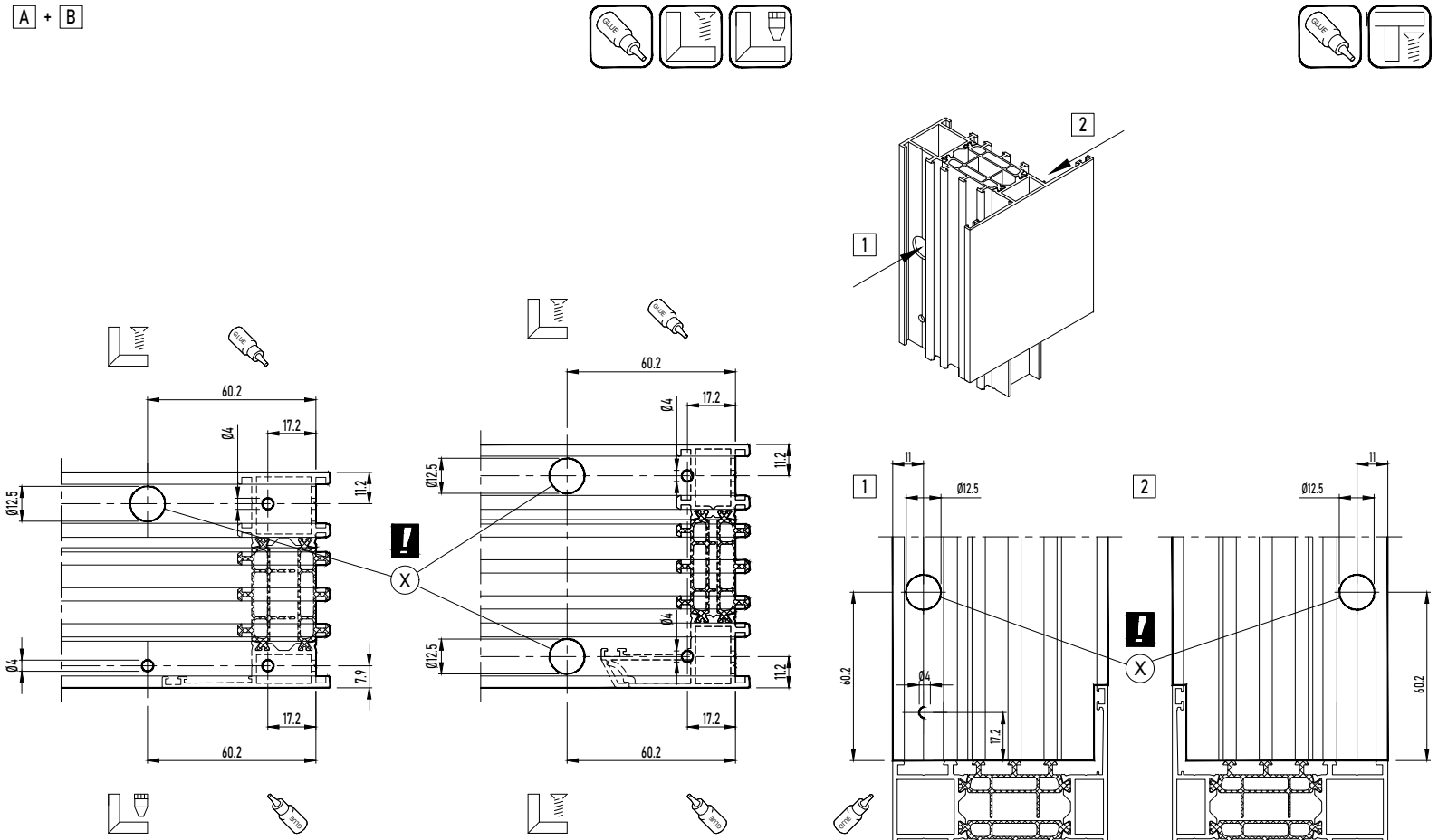

Aanpassing diameter: zie handleiding 197.F900.00
Modification diamètre: voir manuel 197.F900.00
Change size diameter: see manual 197.F900.00
Wechsel Durchmesser: siehe Gebrauchsanweisung 197.F900.00

MONTAGEVOLGORDE L 'ORDRE DE MONTAGE THE ORDER OF ASSEMBLY MONTAGEREIHENFOLGE	1 2 3 .

X	DICHTINGSMIDDEL MATIERE D'ETANCHEITE SEALING AGENT ABDICHTUNG

LIJMINJECTIE NA VERBINDING
INJECTION DE COLLE APRÈS LA CONNEXION
GLUE INJECTION AFTER CONNECTION
KLEBEINJEKTION NACH DEM ANSCHLUSS

CORNER SCREW JIG

GLUE INJECTION + CORNER CONNECTION 197.D600.00

MASTERLINE 8-Fu

!	169.9496.04 MOETEN SAMEN WORDEN GEÏNSTALLERD MET 068.7798.04 OF 168.7073.00 169.9496.04 DOIT ÊTRE INSTALLÉ ENSEMBLE AVEC 168.7088.00 OU 168.7073.00 169.9496.04 MUST BE INSTALLED TOGETHER WITH 168.7088.00 OR 168.7073.00 169.9496.04 MUSS ZUSAMMEN MIT 168.7088.00 ODER 168.7073.00 INSTALLIERT WERDEN

!	ENKEL BIJ 408.0094.XX EN 408.0096.XX SEULEMENT POUR 408.0094.XX ET 408.0096.XX ONLY FOR 408.0094.XX AND 408.0096.XX NUR BEI 408.0094.XX UND 408.0096.XX

LIJMINJECTIE NA VERBINDING
INJECTION DE COLLE APRÈS LA CONNEXION
GLUE INJECTION AFTER CONNECTION
KLEBEINJEKTION NACH DEM ANSCHLUSS

X DICHTINGSMIDDEL
MATIERE D'ETANCHEITE
SEALING AGENT
ABDICHTUNG



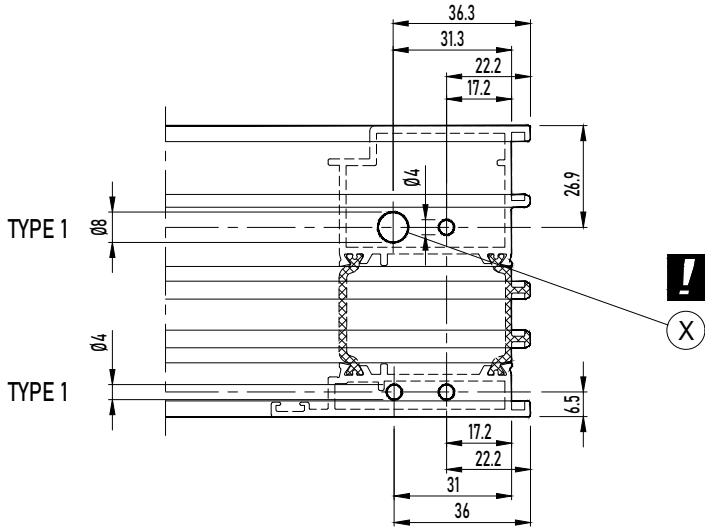

CORNER SCREW JIG

GLUE INJECTION + CORNER CONNECTION 197.D600.00

MASTERLINE 8-Fu

169.9496.04 MOETEN SAMEN WORDEN GEÏNSTALLERD MET 068.7798.04 OF 168.7073.00
169.9496.04 DOIT ÊTRE INSTALLÉ ENSEMBLE AVEC 168.7088.00 OU 168.7073.00
169.9496.04 MUST BE INSTALLED TOGETHER WITH 168.7088.00 OR 168.7073.00
169.9496.04 MUSS ZUSAMMEN MIT 168.7088.00 ODER 168.7073.00 INSTALLIERT WERDEN

ENKEL BIJ 408.0094.XX EN 408.0096.XX
SEULEMENT POUR 408.0094.XX ET 408.0096.XX
ONLY FOR 408.0094.XX AND 408.0096.XX
NUR BEI 408.0094.XX UND 408.0096.XX

LIJMINJECTIE NA VERBINDING
INJECTION DE COLLE APRÈS LA CONNEXION
GLUE INJECTION AFTER CONNECTION
KLEBEINJEKTION NACH DEM ANSCHLUSS

X DICHTINGSMIDDEL
MATIERE D'ETANCHEITE
SEALING AGENT
ABDICHTUNG



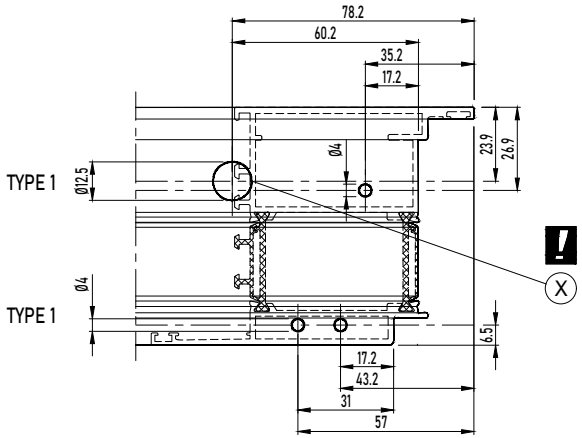

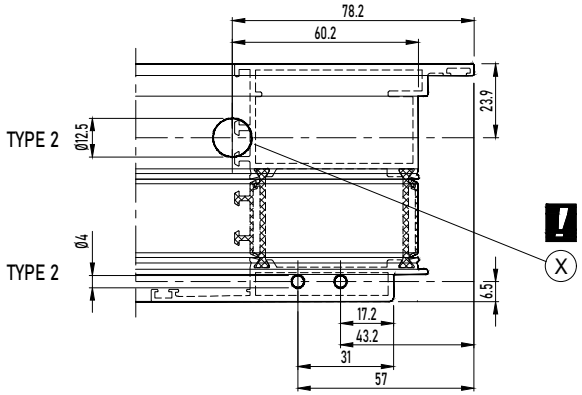

CORNER SCREW JIG GLUE INJECTION

GLUE INJECTION + CORNER CONNECTION 197.F900.00

MASTERLINE 8-Fu

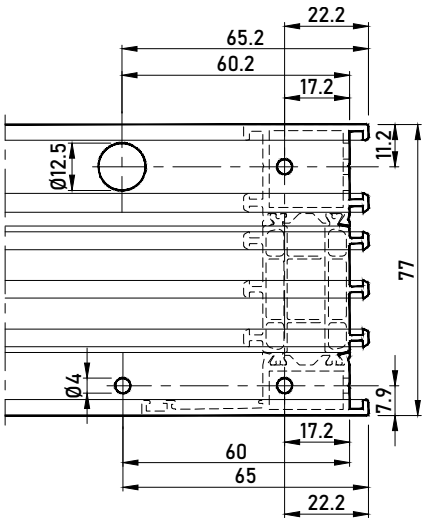

CORNER SCREW JIG GLUE INJECTION

GLUE INJECTION + CORNER CONNECTION 197.F900.00

MASTERLINE 8-Fu

ALGEMEEN PRINCIPE
GENERAL PRINCIPE
GENERAL PRINCIPLE
ALLGEMEIN PRINZIP

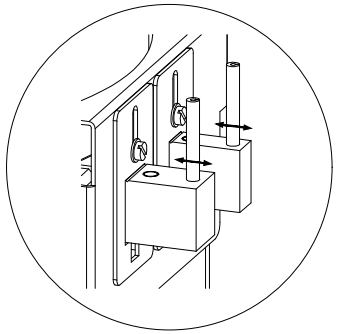



A

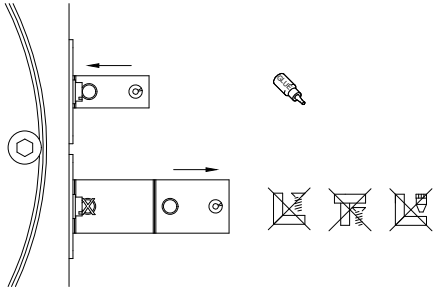



B

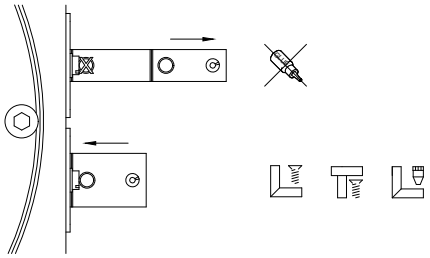

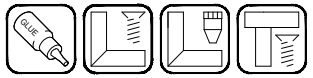

A + B

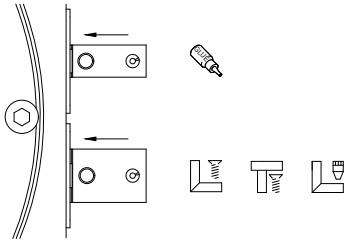

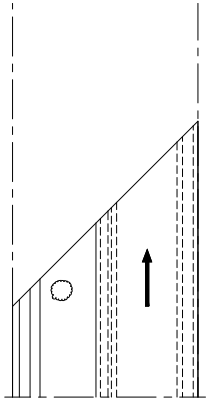

3

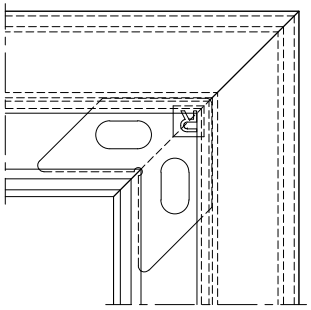

REYNASEAL DUO
REYNASEAL DUO
REYNASEAL DUO
REYNASEAL DUO

REYNAPROTECTOR
REYNAPROTECTOR
REYNAPROTECTOR
REYNAPROTECTOR

MONTAGEVOLGORDE
L 'ORDRE DE MONTAGE
THE ORDER OF ASSEMBLY
MONTAGEREIHENFOLGE
1 2 3 .

BIJKOMENDE INFO VOORBEREIDING/VERWERKING -> ZIE HARDWARE CONFIGURATION
HARDWARE CONFIGURATIONCHAPITRE F 'PRESCRIPTIONS DE MISE EN OEUVRE' !
ADDITIONAL INFO PREPARATION/PROCESSING -> SEE HARDWARE CONFIGURATION
ZUSAETZLICHE INFO VORBEREITUNG/VERARBEITUNG -> SIEHE HARDWARE CONFIGURATION

OPTIE 1 / OPTION 1

KADER / VLEUGEL / T-PROFIEL
CADRE / OUVRANT / TRAVERSE
FRAME / VENT / TRANSOM-MULLION
BLENDRAHMEN / FLUEGEL / SPROSSE



NOT FOR: 408.0102.XX 408.0202.XX 408.0902.XX
508.0102.XX 508.0202.XX 508.0902.XX

1

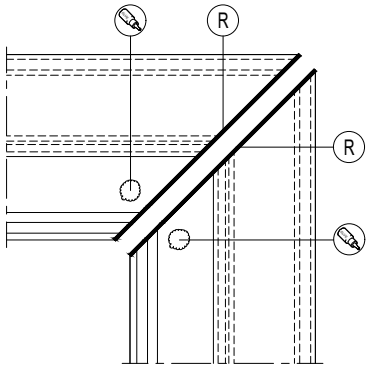

2

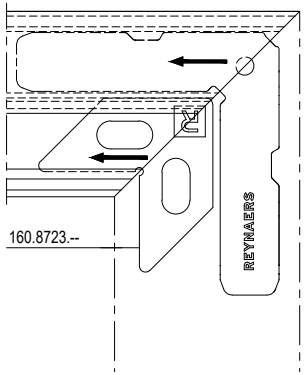

OPTIE 2 / OPTION 2

KADER / VLEUGEL / T-PROFIEL
CADRE / OUVRANT / TRAVERSE
FRAME / VENT / TRANSOM-MULLION
BLENDRAHMEN / FLUEGEL / SPROSSE



1

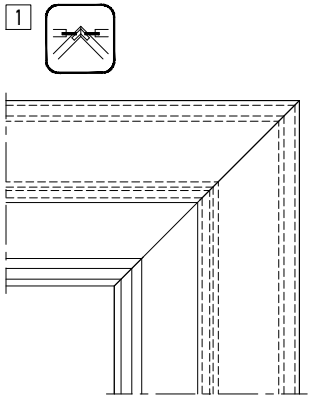

2

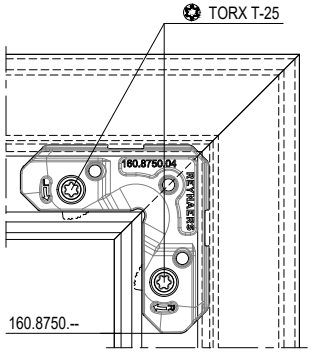

OPTIE 3 / OPTION 3

ENKEL VLEUGEL	OPTIE 3 IN COMBINATIE MET OPTIE 1 OF OPTIE 2
SEULEMENT TRAVERSE	OPTION 3 COMBINE AVEC OPTION 1 OU OPTION 2
ONLY VENT	OPTION 3 COMBINED WITH OPTION 1 OR OPTION 2
NUR FLUEGEL	OPTION 3 KOMBINIERT MIT OPTION 1 ODER OPTION 2

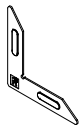

1

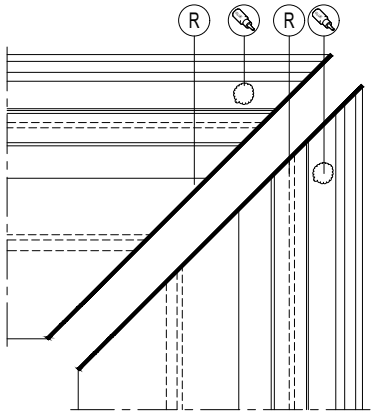

2

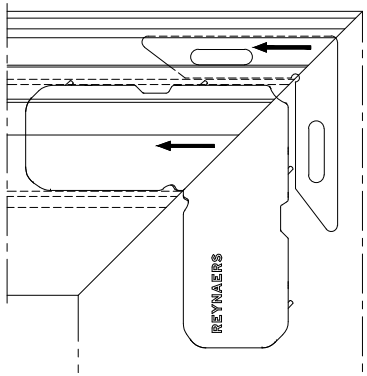

3

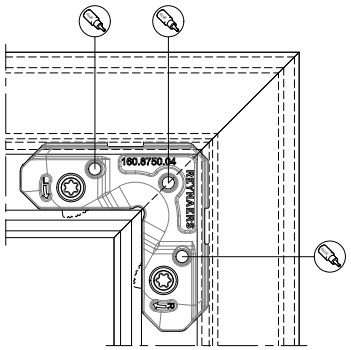

REYNASEAL DUO
REYNASEAL DUO
REYNASEAL DUO
REYNASEAL DUO

R REYNAPROTECTOR
REYNAPROTECTOR
REYNAPROTECTOR
REYNAPROTECTOR

MONTAGEVOLGORDE
L'ORDRE DE MONTAGE
THE ORDER OF ASSEMBLY
MONTAGEREIHENFOLGE
1 2 3 .

BIJKOMENDE INFO VOORBEREIDING/VERWERKING -> ZIE HARDWARE CONFIGURATION
HARDWARE CONFIGURATIONCHAPITRE F 'PRESCRIPTIONS DE MISE EN OEUVRE' !
ADDITIONAL INFO PREPARATION/PROCESSING -> SEE HARDWARE CONFIGURATION
ZUSAETZLICHE INFO VORBEREITUNG/VERARBEITUNG -> SIEHE HARDWARE CONFIGURATION

OPTIE 1 / OPTION 1

KADER / VLEUGEL / T-PROFIEL
CADRE / OUVRANT / TRAVERSE
FRAME / VENT / TRANSOM-MULLION
BLENDRAHMEN / FLUEGEL / SPROSSE



NOT FOR: 408.0102.XX 408.0202.XX 408.0902.XX
508.0102.XX 508.0202.XX 508.0902.XX

1

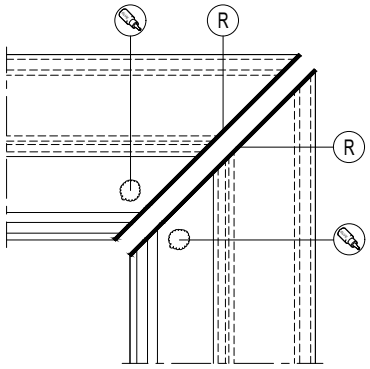

2

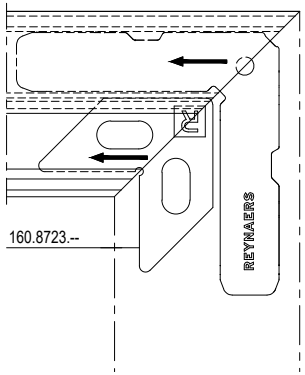

OPTIE 2 / OPTION 2

KADER / VLEUGEL / T-PROFIEL
CADRE / OUVRANT / TRAVERSE
FRAME / VENT / TRANSOM-MULLION
BLENDRAHMEN / FLUEGEL / SPROSSE



1

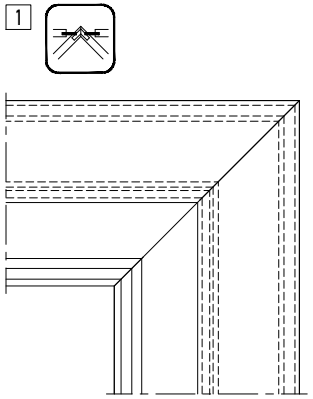

2

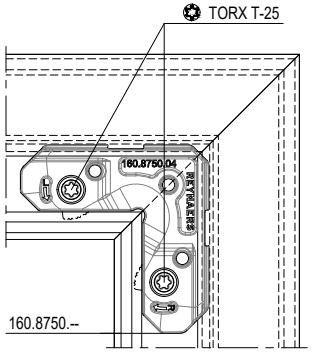

OPTIE 3 / OPTION 3

ENKEL VLEUGEL	OPTIE 3 IN COMBINATIE MET OPTIE 1 OF OPTIE 2
SEULEMENT TRAVERSE	OPTION 3 COMBINE AVEC OPTION 1 OU OPTION 2
ONLY VENT	OPTION 3 COMBINED WITH OPTION 1 OR OPTION 2
NUR FLUEGEL	OPTION 3 KOMBINIERT MIT OPTION 1 ODER OPTION 2

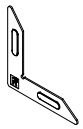

1

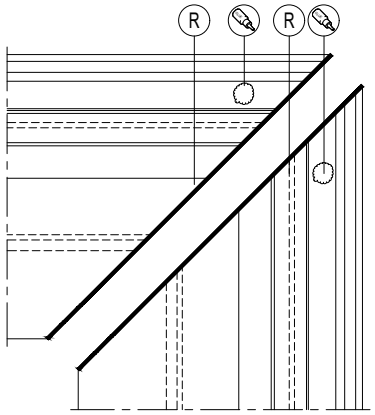

2

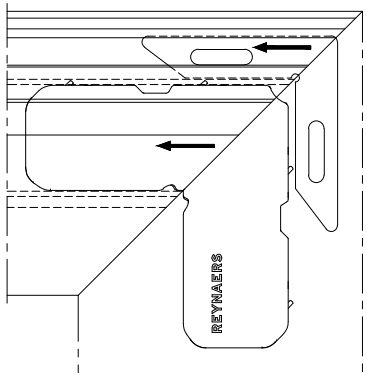

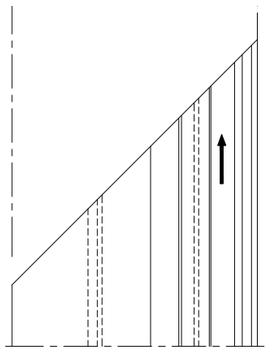

3

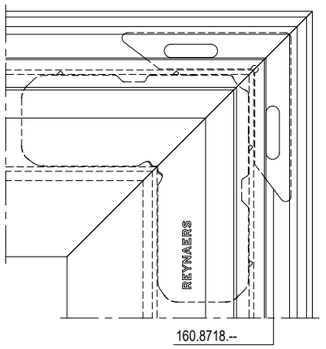

REYNASEAL DUO
REYNASEAL DUO
REYNASEAL DUO
REYNASEAL DUO

REYNAPROTECTOR
REYNAPROTECTOR
REYNAPROTECTOR
REYNAPROTECTOR

MONTAGEVOLGORDE
L 'ORDRE DE MONTAGE
THE ORDER OF ASSEMBLY
MONTAGEREIHENFOLGE
1 2 3 .

BIJKOMENDE INFO VOORBEREIDING/VERWERKING -> ZIE HOOFDSTUK F 'VERWERKINGSVOORSCHRIFTEN' !
INFO COMPLEMENTAIRE PREPARATION/USINAGE -> VOIR CHAPITRE F 'PRESCRIPTIONS DE MISE EN OEUVRE' !
ADDITIONAL INFO PREPARATION/PROCESSING -> SEE CHAPTER F 'PROCESSING DATA' !
ZUSAETZLICHE INFO VORBEREITUNG/VERARBEITUNG -> SIEHE KAPITEL F 'VERARBEITUNGSVORSCHRIFTEN' !

OPTIE 1 / OPTION 1

KADER / VLEUGEL / T-PROFIEL
CADRE / OUVRANT / TRAVERSE
FRAME / VENT / TRANSOM-MULLION
BLENDRAHMEN / FLUEGEL / SPROSSE



NOT FOR: 408.0102.XX 408.0202.XX 408.0902.XX
508.0102.XX 508.0202.XX 508.0902.XX

1

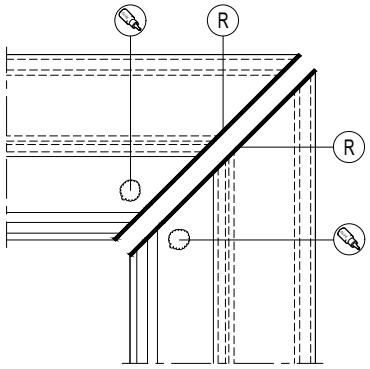

2

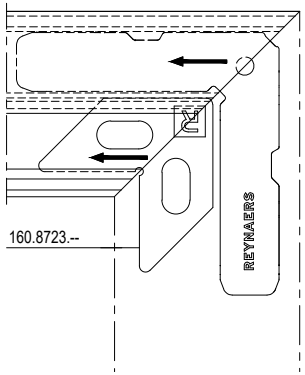

OPTIE 2 / OPTION 2

KADER / VLEUGEL / T-PROFIEL
CADRE / OUVRANT / TRAVERSE
FRAME / VENT / TRANSOM-MULLION
BLENDRAHMEN / FLUEGEL / SPROSSE



1

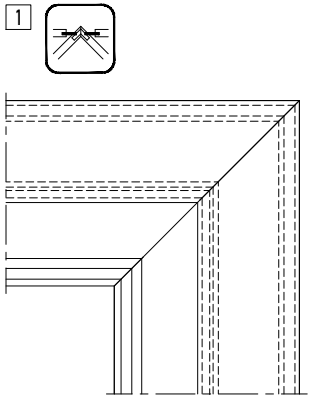

2

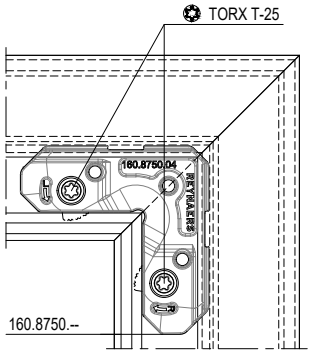

OPTIE 3 / OPTION 3

ENKEL VLEUGEL	OPTIE 3 IN COMBINATIE MET OPTIE 1 OF OPTIE 2
SEULEMENT TRAVERSE	OPTION 3 COMBINE AVEC OPTION 1 OU OPTION 2
ONLY VENT	OPTION 3 COMBINED WITH OPTION 1 OR OPTION 2
NUR FLUEGEL	OPTION 3 KOMBINIERT MIT OPTION 1 ODER OPTION 2

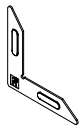

1

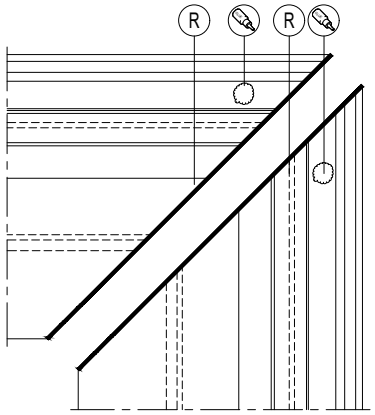

2

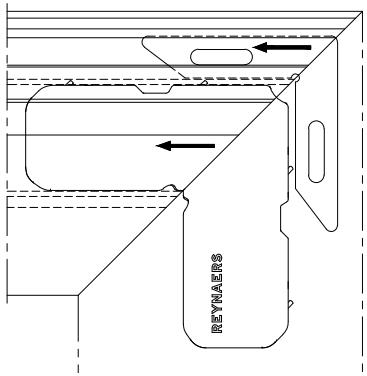

CORNER VAR MC

SCREW CORNER CLEAT ADJUSTABLE

MASTERLINE 8-Fu

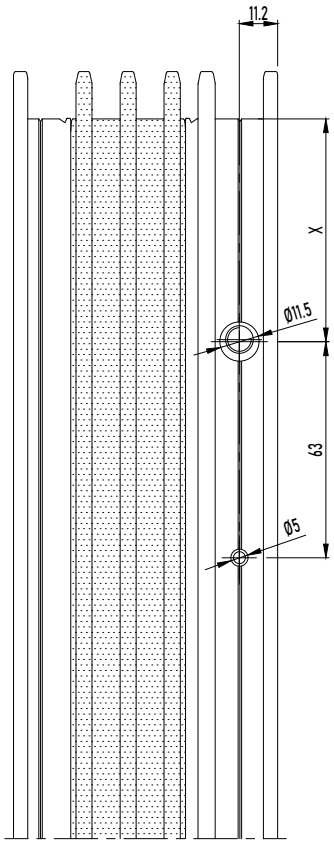

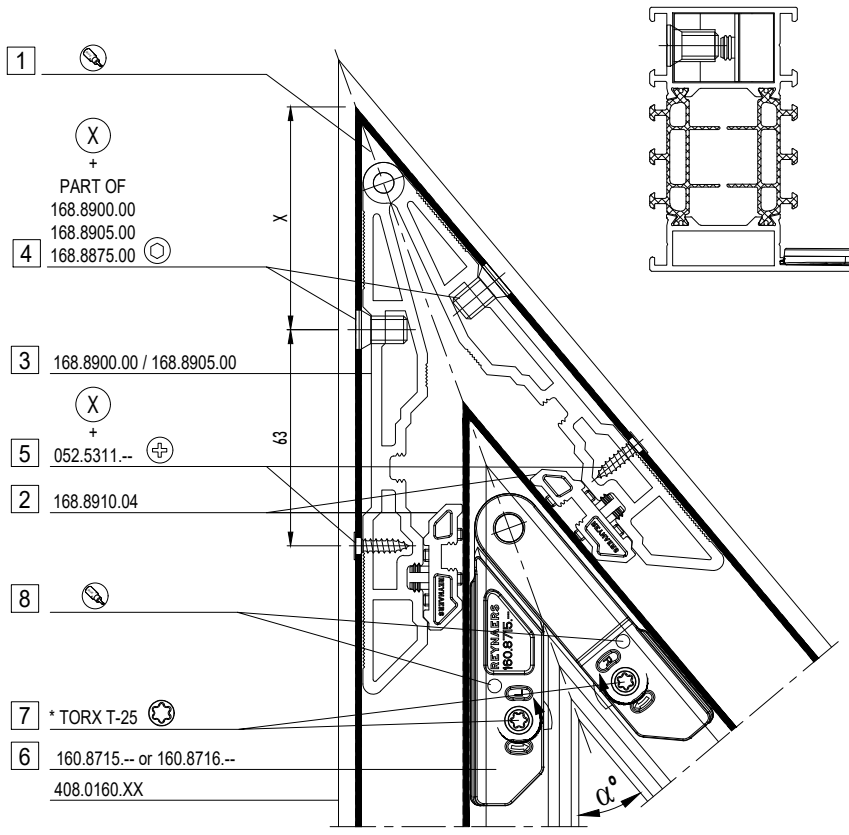

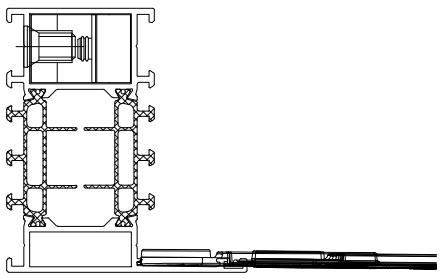

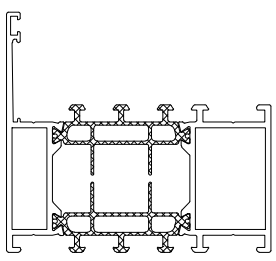

MONTAGEVOLGORDE
L'ORDRE DE MONTAGE
THE ORDER OF ASSEMBLY
MONTAGEREIHENFOLGE
1 2 3 .

REYNASEAL DUO
REYNASEAL DUO
REYNASEAL DUO
REYNASEAL DUO

DICHTINGSMIDDEL
MATIERE D'ETANCHEITE
SEALING AGENT
ABDICHTUNG

* SIMULTAAN AANSCHROEVEN !
* VISSER SIMULTANÉ !
* SCREW SIMULTANEOUSLY !
* SIMULTAN ANSCHRAUBEN !

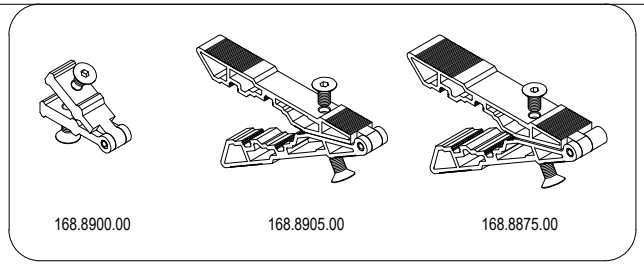

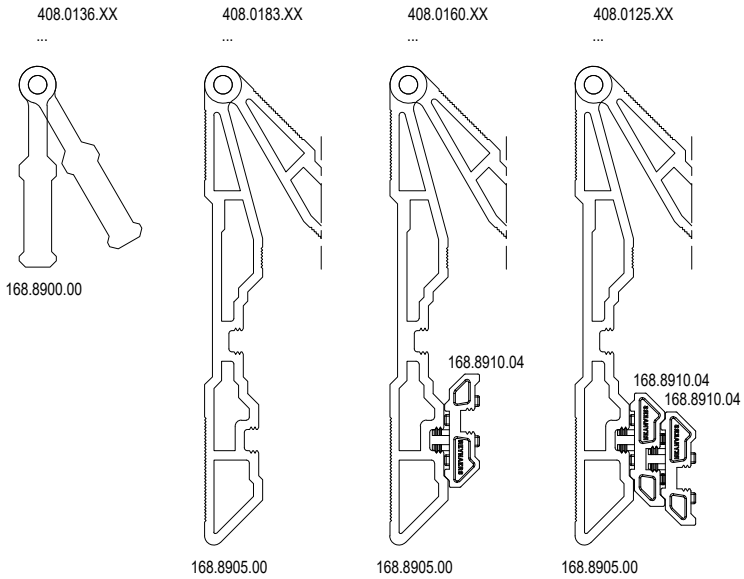

Angle α		X
MIN	45	62.1
	50	60.0
	55	58.3
	60	56.8
	65	55.6
	70	54.5
	75	53.5
	80	52.7
	85	51.9
	90	51.2
	95	50.5
	100	50.0
	105	49.4
	110	48.9
	115	48.4
	120	47.9
	125	47.5
	130	47.1
MAX	135	46.7

$$X = 43.5 + \left(\frac{7.7}{\tan(a/2)}\right)$$

ARTIKELNUMMERS PER PROFIEL: RAADPLEEG DOCUMENTATION PLATFORM
NUMÉROS DES ARTICLES PAR PROFIL: CONSULTEZ DOCUMENTATION PLATFORM
ARTICLE NUMBERS BY PROFILE: CONSULT DOCUMENTATION PLATFORM
ARTIKEL REFERENZEN PRO PROFIL: SIEHE DOCUMENTATION PLATFORM

CORNER VAR MC

SCREW CORNER CLEAT ADJUSTABLE

MASTERLINE 8-Fu

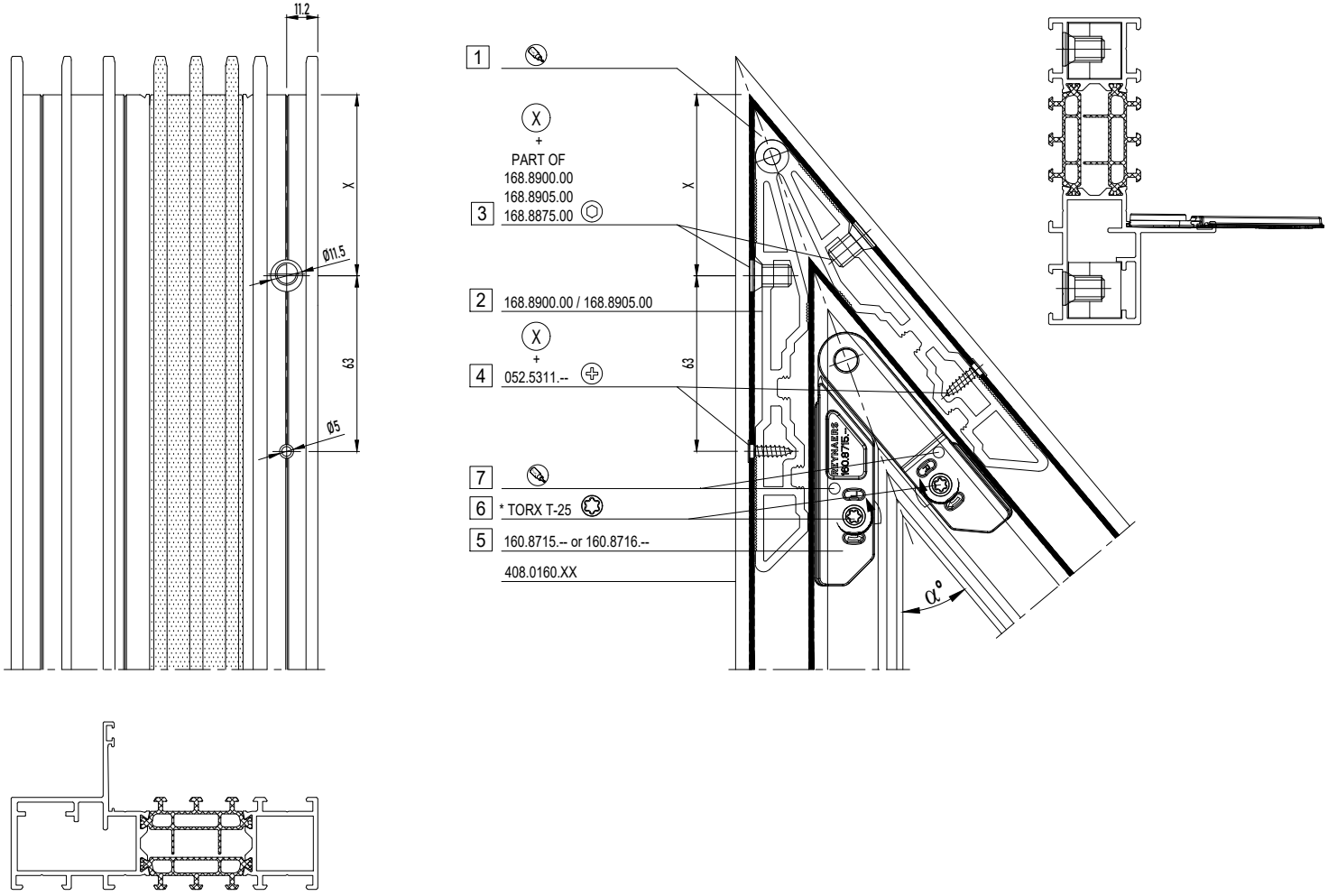

MONTAGEVOLGORDE
L 'ORDRE DE MONTAGE
THE ORDER OF ASSEMBLY
MONTAGEREIHENFOLGE
1 2 3 .

REYNASEAL DUO
REYNASEAL DUO
REYNASEAL DUO
REYNASEAL DUO

DICHTINGSMIDDEL
MATIERE D'ETANCHEITE
SEALING AGENT
ABDICHTUNG

* SIMULTAAN AANSCHROEVEN !
* VISSER SIMULTANÉ !
* SCREW SIMULTANEOUSLY !
* SIMULTAN ANSCHRAUBEN !

CORNER VAR MC

SCREW CORNER CLEAT ADJUSTABLE

MASTERLINE 8-Fu

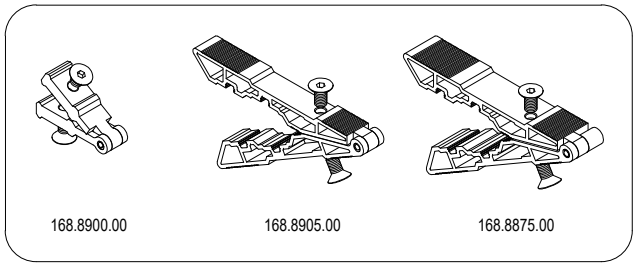

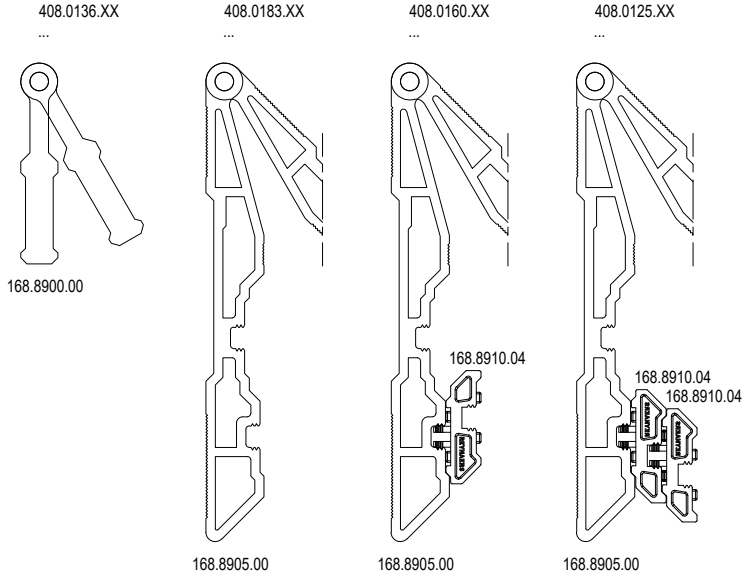

Angle α		X
MIN	45	62.1
	50	60.0
	55	58.3
	60	56.8
	65	55.6
	70	54.5
	75	53.5
	80	52.7
	85	51.9
	90	51.2
	95	50.5
	100	50.0
	105	49.4
	110	48.9
	115	48.4
	120	47.9
	125	47.5
	130	47.1
MAX	135	46.7

$$X = 43.5 + \left(\frac{7.7}{\tan(a/2)}\right)$$

ARTIKELNUMMERS PER PROFIEL: RAADPLEEG DOCUMENTATION PLATFORM
NUMÉROS DES ARTICLES PAR PROFIL: CONSULTEZ DOCUMENTATION PLATFORM
ARTICLE NUMBERS BY PROFILE: CONSULT DOCUMENTATION PLATFORM
ARTIKEL REFERENZEN PRO PROFIL: SIEHE DOCUMENTATION PLATFORM

CORNER VAR MC

SCREW CORNER CLEAT ADJUSTABLE

MASTERLINE 8-Fu

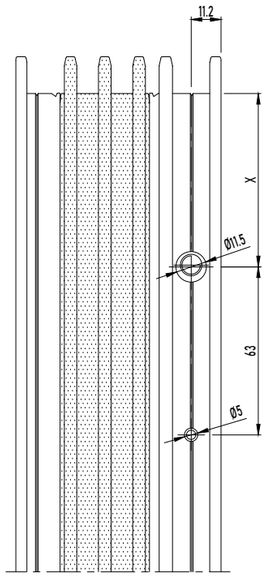

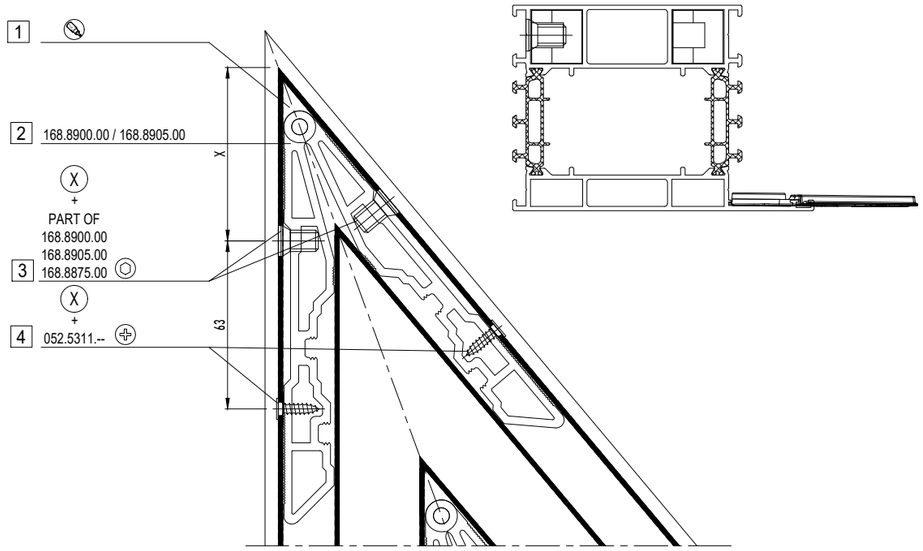

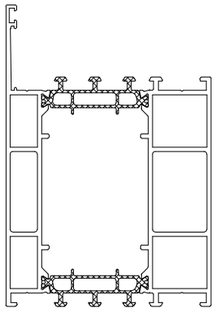

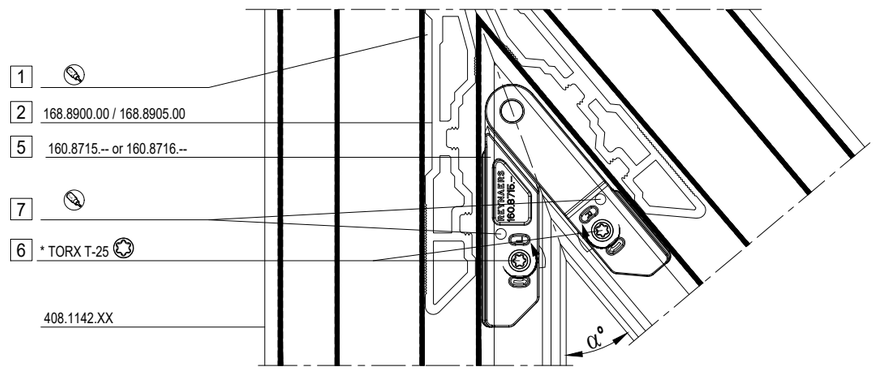

MONTAGEVOLGORDE L 'ORDRE DE MONTAGE THE ORDER OF ASSEMBLY MONTAGEREIHENFOLGE	1 2 3 .	REYNASEAL DUO REYNASEAL DUO REYNASEAL DUO REYNASEAL DUO	DICHTINGSMIDDEL MATIERE D'ETANCHEITE SEALING AGENT ABDICHTUNG	* SIMULTAAN AANSCHROEVEN ! * VISSER SIMULTANÉ ! * SCREW SIMULTANEOUSLY ! * SIMULTAN ANSCHRAUBEN !

CORNER VAR MC

SCREW CORNER CLEAT ADJUSTABLE

MASTERLINE 8-Fu

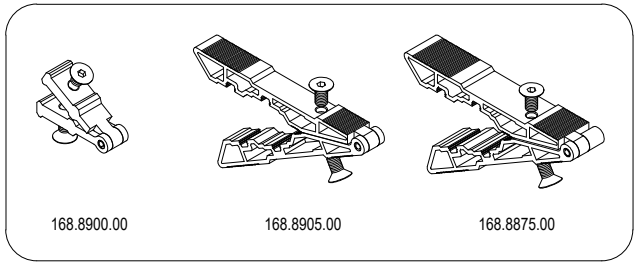

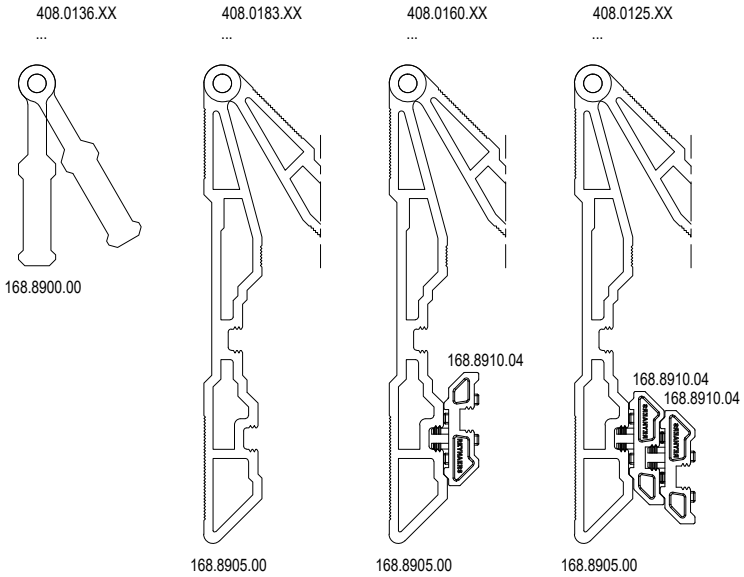

Angle α		X
MIN	45	62.1
	50	60.0
	55	58.3
	60	56.8
	65	55.6
	70	54.5
	75	53.5
	80	52.7
	85	51.9
	90	51.2
	95	50.5
	100	50.0
	105	49.4
	110	48.9
	115	48.4
	120	47.9
	125	47.5
	130	47.1
MAX	135	46.7

$$X = 43.5 + \left(\frac{7.7}{\tan(a/2)}\right)$$

ARTIKELNUMMERS PER PROFIEL: RAADPLEEG DOCUMENTATION PLATFORM
NUMÉROS DES ARTICLES PAR PROFIL: CONSULTEZ DOCUMENTATION PLATFORM
ARTICLE NUMBERS BY PROFILE: CONSULT DOCUMENTATION PLATFORM
ARTIKEL REFERENZEN PRO PROFIL: SIEHE DOCUMENTATION PLATFORM

CORNER VAR JIG

SCREW CORNER CLEAT ADJUSTABLE

MASTERLINE 8-Fu

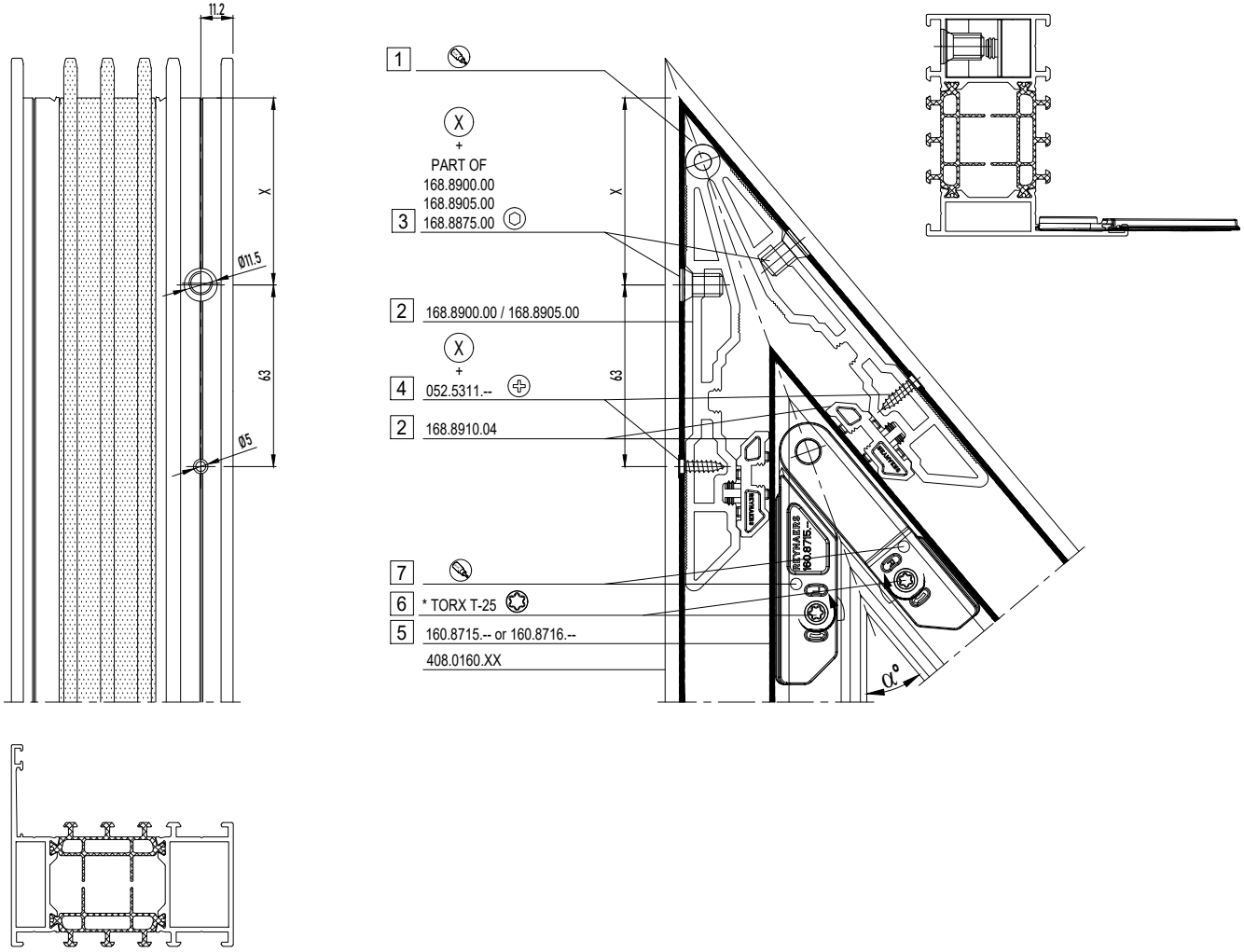

MONTAGEVOLGORDE
L 'ORDRE DE MONTAGE
THE ORDER OF ASSEMBLY
MONTAGEREIHENFOLGE
1 2 3 .

REYNASEAL DUO
REYNASEAL DUO
REYNASEAL DUO
REYNASEAL DUO

DICHTINGSMIDDEL
MATIERE D'ETANCHEITE
SEALING AGENT
ABDICHTUNG

* SIMULTAAN AANSCHROEVEN !
* VISSER SIMULTANÉ !
* SCREW SIMULTANEOUSLY !
* SIMULTAN ANSCHRAUBEN !

CORNER VAR JIG

SCREW CORNER CLEAT ADJUSTABLE

MASTERLINE 8-Fu

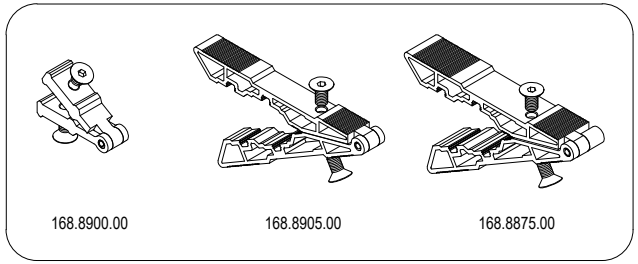

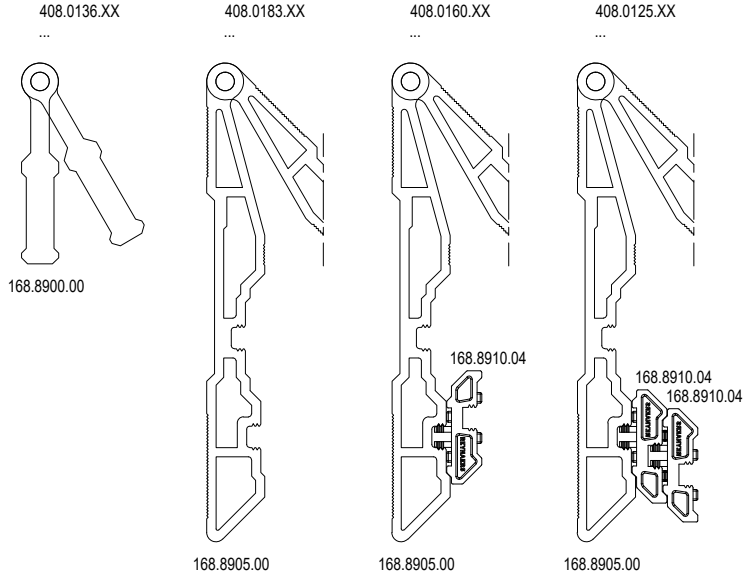

Angle	α	X
MIN	45	62.1
	50	60.0
	55	58.3
	60	56.8
	65	55.6
	70	54.5
	75	53.5
	80	52.7
	85	51.9
	90	51.2
	95	50.5
	100	50.0
	105	49.4
	110	48.9
	115	48.4
	120	47.9
	125	47.5
	130	47.1
MAX	135	46.7

$$X = 43.5 + \left(\frac{7.7}{\tan(a/2)}\right)$$

ARTIKELNUMMERS PER PROFIEL: RAADPLEEG DOCUMENTATION PLATFORM
NUMÉROS DES ARTICLES PAR PROFIL: CONSULTEZ DOCUMENTATION PLATFORM
ARTICLE NUMBERS BY PROFILE: CONSULT DOCUMENTATION PLATFORM
ARTIKEL REFERENZEN PRO PROFIL: SIEHE DOCUMENTATION PLATFORM

CORNER VAR JIG

SCREW CORNER CLEAT ADJUSTABLE

MASTERLINE 8-Fu

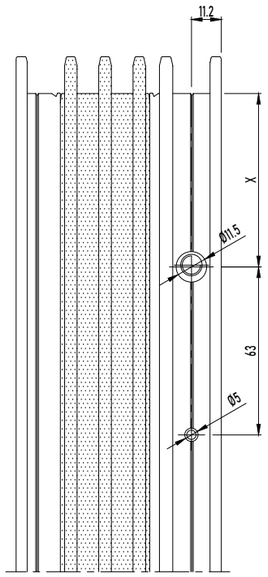

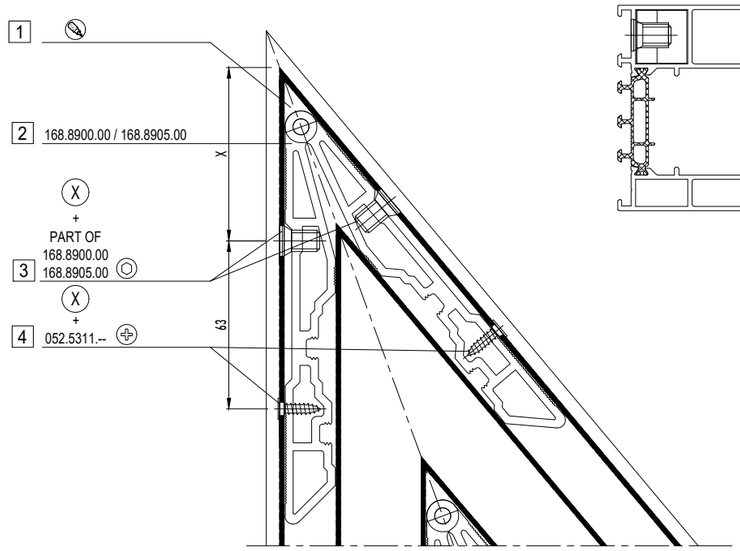

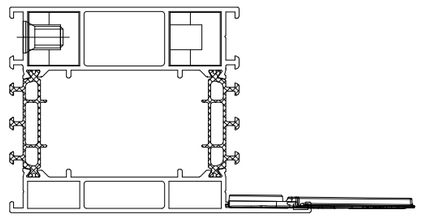

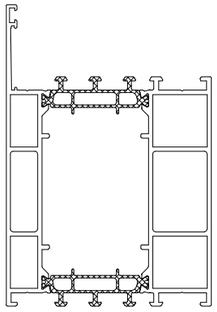

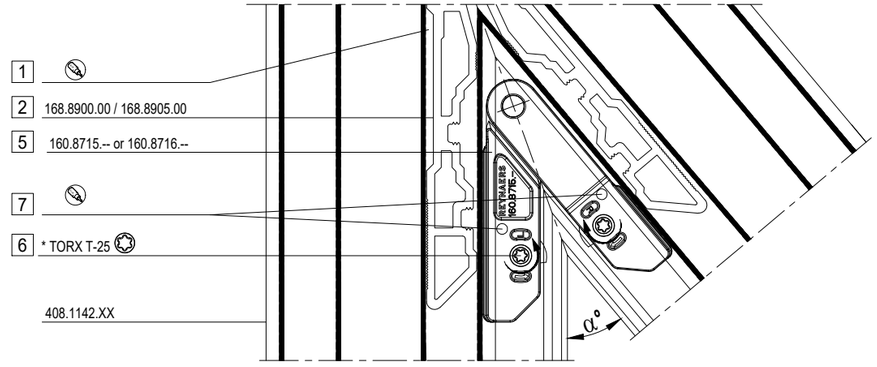

MONTAGEVOLGORDE L 'ORDRE DE MONTAGE THE ORDER OF ASSEMBLY MONTAGEREIHENFOLGE	1 2 3 .
REYNASEAL DUO REYNASEAL DUO REYNASEAL DUO REYNASEAL DUO	
DICHTINGSMIDDEL MATIERE D'ETANCHEITE SEALING AGENT ABDICHTUNG	
* SIMULTAAN AANSCHROEVEN ! * VISSER SIMULTANÉ ! * SCREW SIMULTANEOUSLY ! * SIMULTAN ANSCHRAUBEN !	

CORNER VAR JIG

SCREW CORNER CLEAT ADJUSTABLE

MASTERLINE 8-Fu

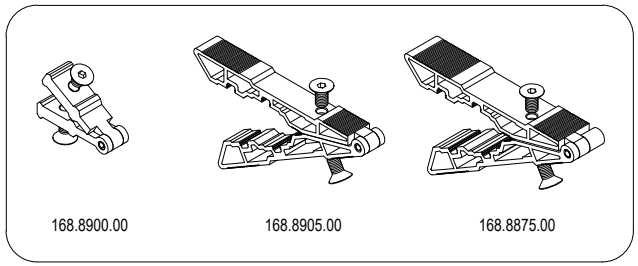

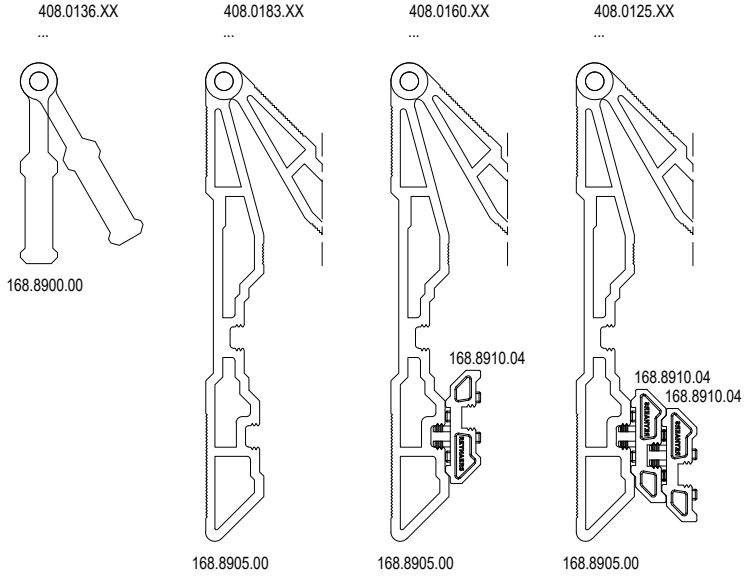

Angle α		X
MIN	45	62.1
	50	60.0
	55	58.3
	60	56.8
	65	55.6
	70	54.5
	75	53.5
	80	52.7
	85	51.9
	90	51.2
	95	50.5
	100	50.0
	105	49.4
	110	48.9
	115	48.4
	120	47.9
	125	47.5
	130	47.1
MAX	135	46.7

$$X = 43.5 + \left(\frac{7.7}{\tan(a/2)}\right)$$

ARTIKELNUMMERS PER PROFIEL: RAADPLEEG DOCUMENTATION PLATFORM
NUMÉROS DES ARTICLES PAR PROFIL: CONSULTEZ DOCUMENTATION PLATFORM
ARTICLE NUMBERS BY PROFILE: CONSULT DOCUMENTATION PLATFORM
ARTIKEL REFERENZEN PRO PROFIL: SIEHE DOCUMENTATION PLATFORM

CORNER VAR JIG

SCREW CORNER CLEAT ADJUSTABLE

MASTERLINE 8-Fu

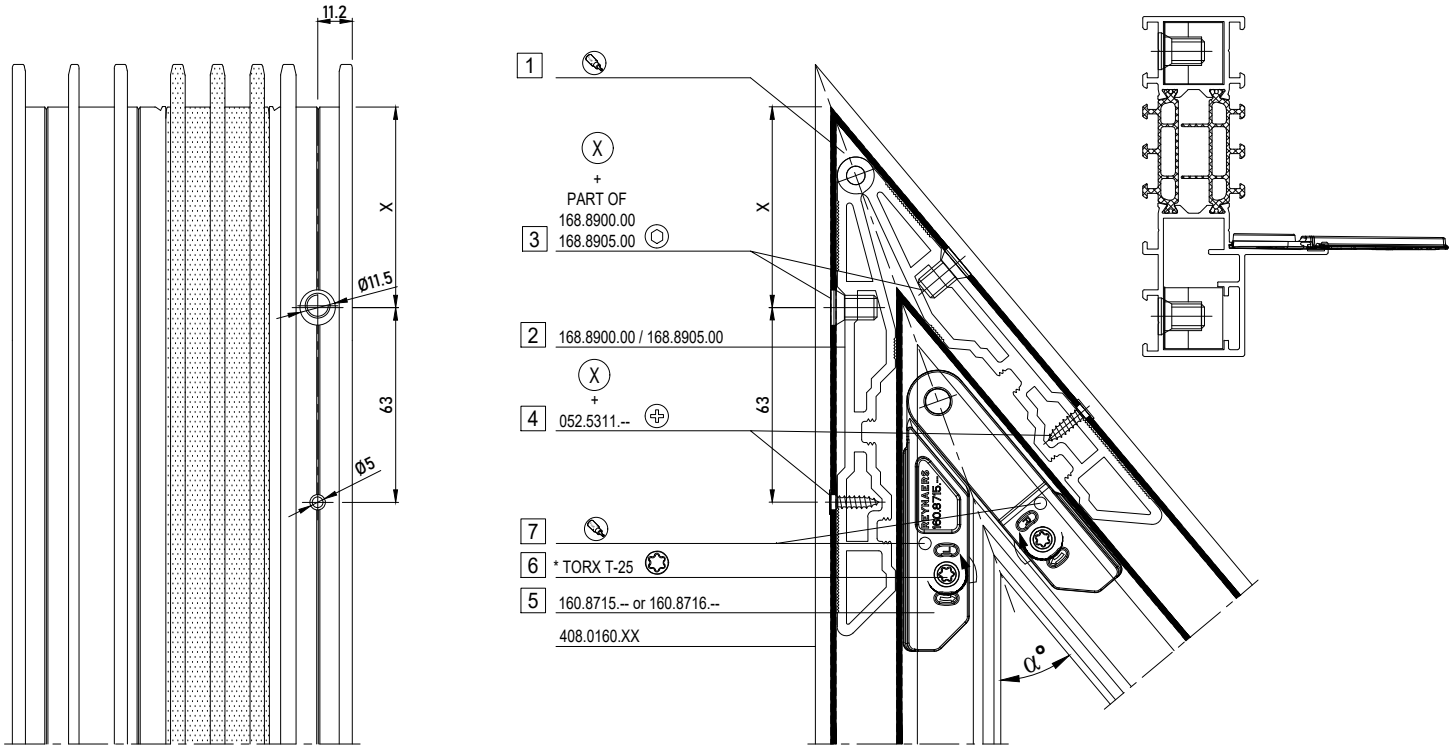

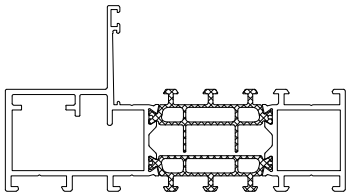

MONTAGEVOLGORDE
L 'ORDRE DE MONTAGE
THE ORDER OF ASSEMBLY
MONTAGEREIHENFOLGE
1 2 3 .

REYNASEAL DUO
REYNASEAL DUO
REYNASEAL DUO
REYNASEAL DUO

DICHTINGSMIDDEL
MATIERE D'ETANCHEITE
SEALING AGENT
ABDICHTUNG

* SIMULTAAN AANSCHROEVEN !
* VISSER SIMULTANÉ !
* SCREW SIMULTANEOUSLY !
* SIMULTAN ANSCHRAUBEN !

CORNER VAR JIG

SCREW CORNER CLEAT ADJUSTABLE

MASTERLINE 8-Fu

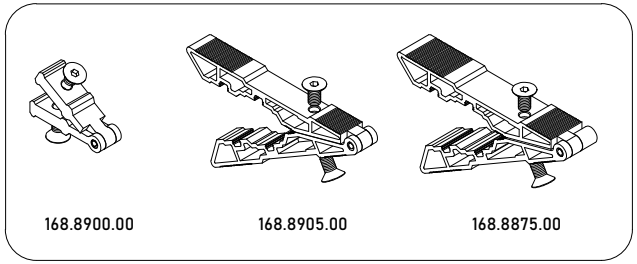

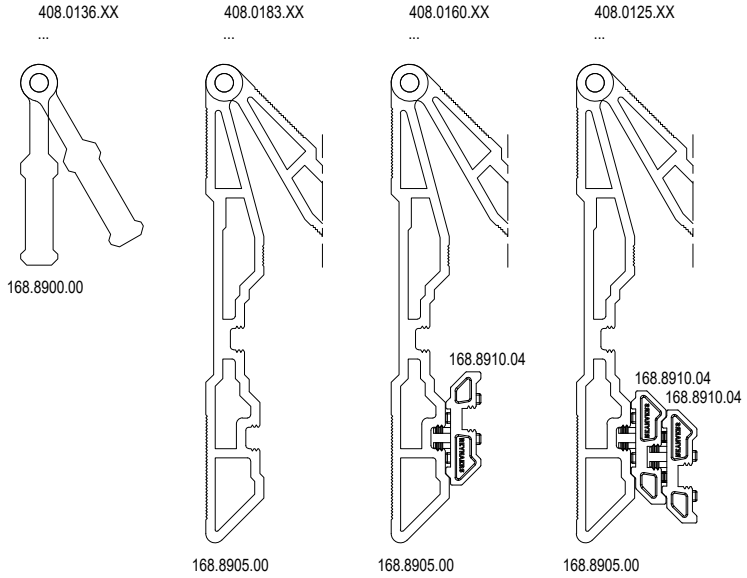

Angle α		X
MIN	45	62.1
	50	60.0
	55	58.3
	60	56.8
	65	55.6
	70	54.5
	75	53.5
	80	52.7
	85	51.9
	90	51.2
	95	50.5
	100	50.0
	105	49.4
	110	48.9
	115	48.4
	120	47.9
	125	47.5
	130	47.1
MAX	135	46.7

$$X = 43.5 + \left(\frac{7.7}{\tan(a/2)}\right)$$

ARTIKEL REFERENZEN PRO PROFIL: SIEHE KAPITEL C
INFO COMPLEMENTAIRE PREPARATION/USINAGE -> CONSULTEZ CHAPITRE B !
ADDITIONAL INFO PREPARATION/PROCESSING -> CONSULT CHAPTER B !
ZUSAETZLICHE INFO VORBEREITUNG/VERARBEITUNG -> SIEHE KAPITEL B !

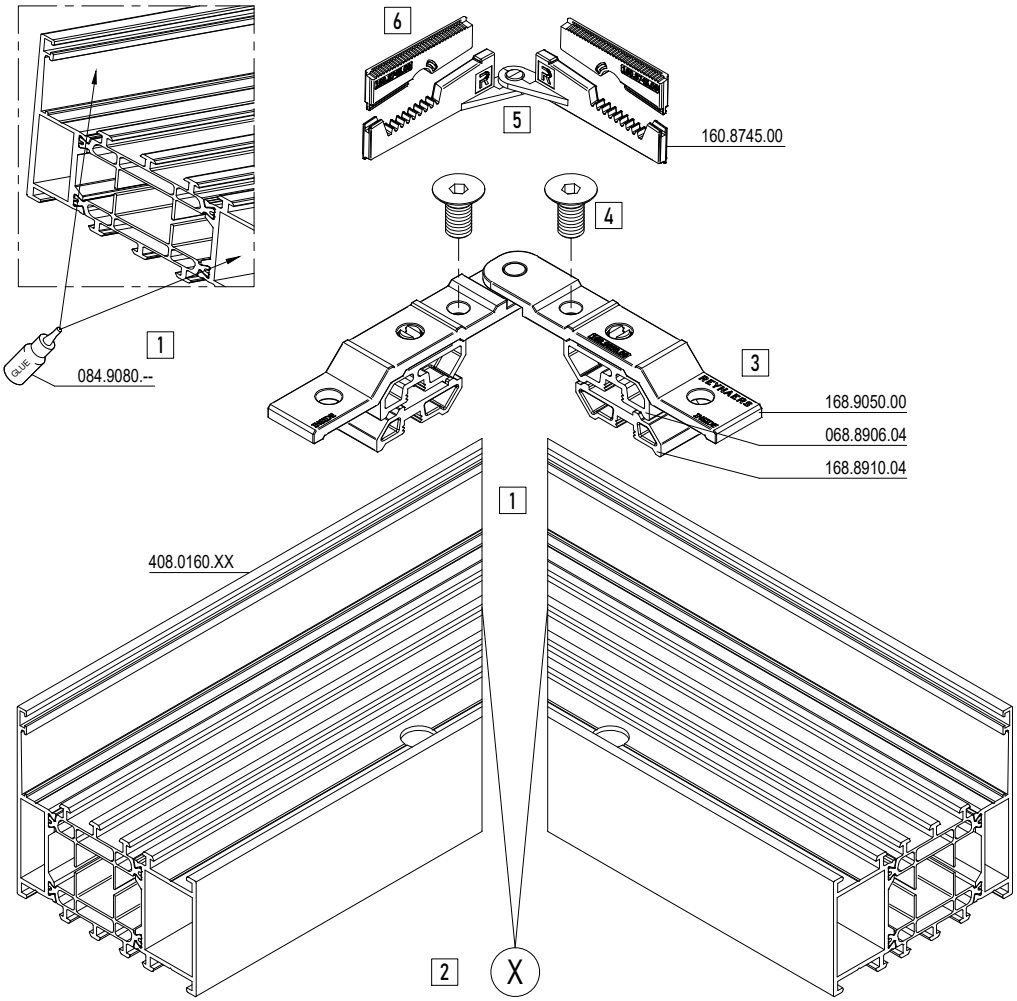

MONTAGEVOLGORDE L 'ORDRE DE MONTAGE THE ORDER OF ASSEMBLY MONTAGEREIHENFOLGE	1 2 3 .
X	DICHTINGSMIDDEL MATIERE D'ETANCHEITE SEALING AGENT ABDICHTUNG

7 Aanschroeven met bits
Vissable cles coudees bits
To screw with bits
Anschrauben mit Bits

097.0754.00

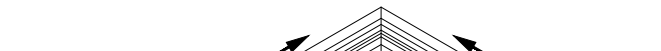

GLASS CORNER

ASSEMBLY GLASS CORNER

MASTERLINE 8-Fu

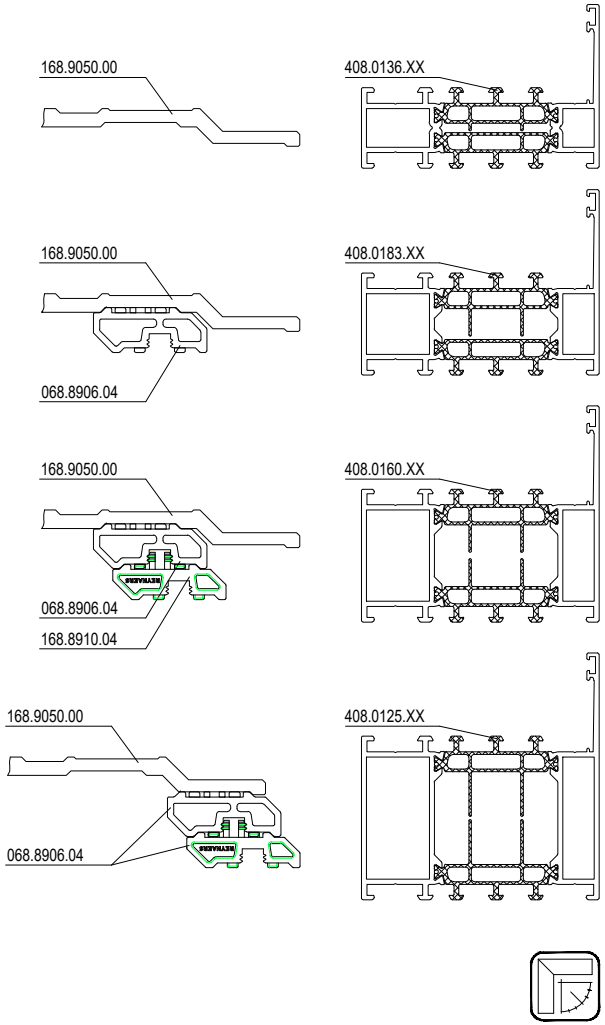

Outside Corner

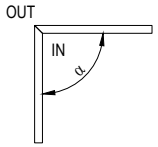

Inside Corner

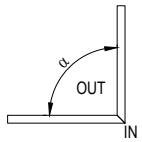

	α	X	Y
MIN	90	92.5	37.5
	95	87.0	36.6
	100	81.9	35.7
	105	77.2	34.9
	110	72.7	34.2
	115	68.6	33.5
	120	64.6	32.9
	125	60.9	32.2
	130	57.3	31.6
	135	53.9	31.0
	140	50.5	30.5
	145	47.3	30.0
MAX	150	44.2	29.5

Outside Corner

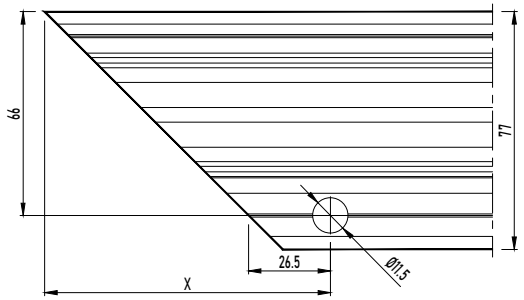

Inside Corner

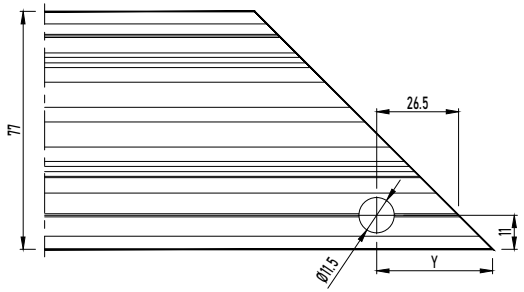

GLASS CORNER

ASSEMBLY GLASS CORNER

MASTERLINE 8-Fu

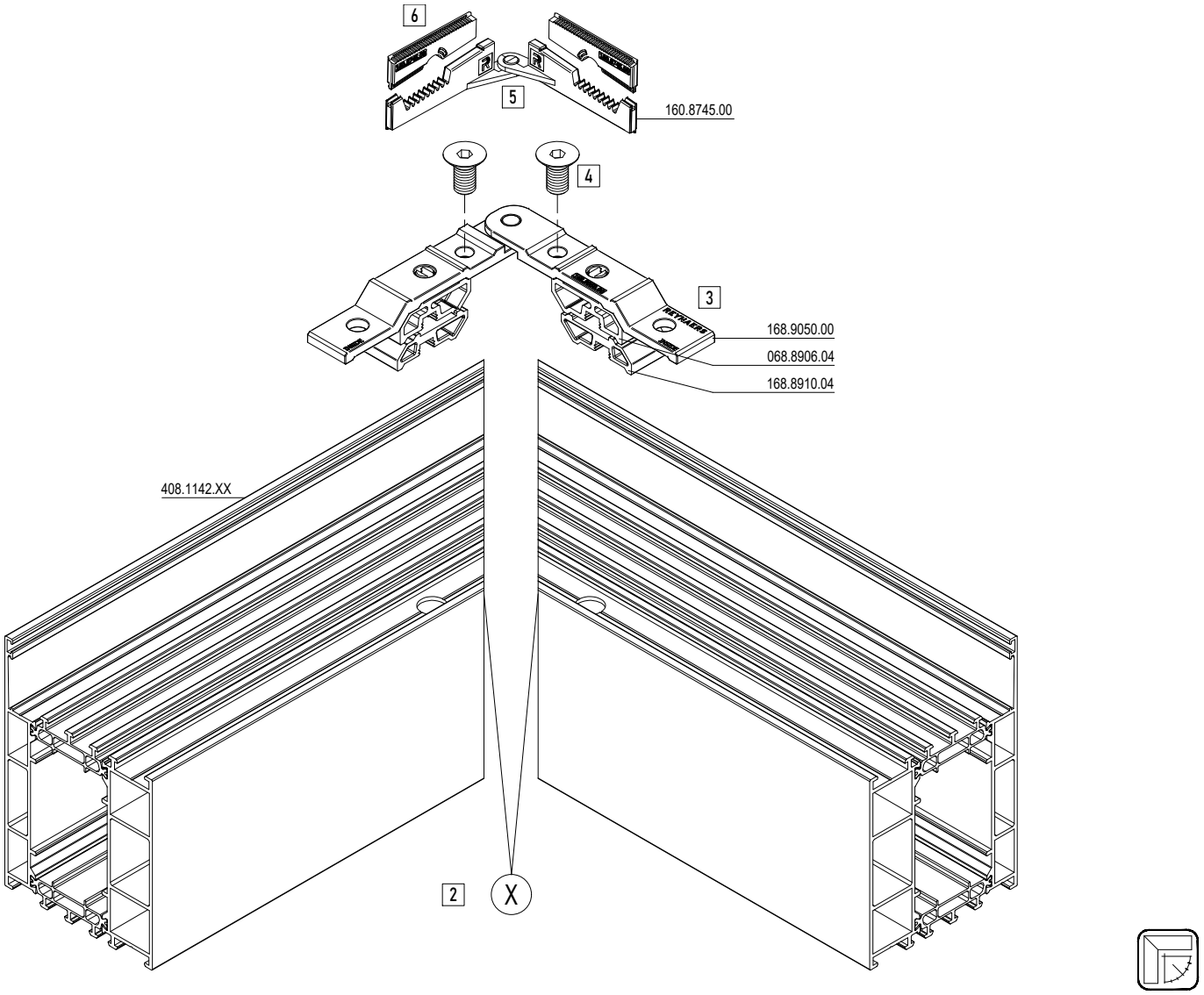

MONTAGEVOLGORDE
L 'ORDRE DE MONTAGE
THE ORDER OF ASSEMBLY
MONTAGEREIHENFOLGE
1 2 3 .

(X) DICHTINGSMIDDEL
MATIERE D'ETANCHEITE
SEALING AGENT
ABDICHTUNG

6 Aanschroeven met bits
Vissable cles coudees bits
To screw with bits
Anschrauben mit Bits

097.0754.00

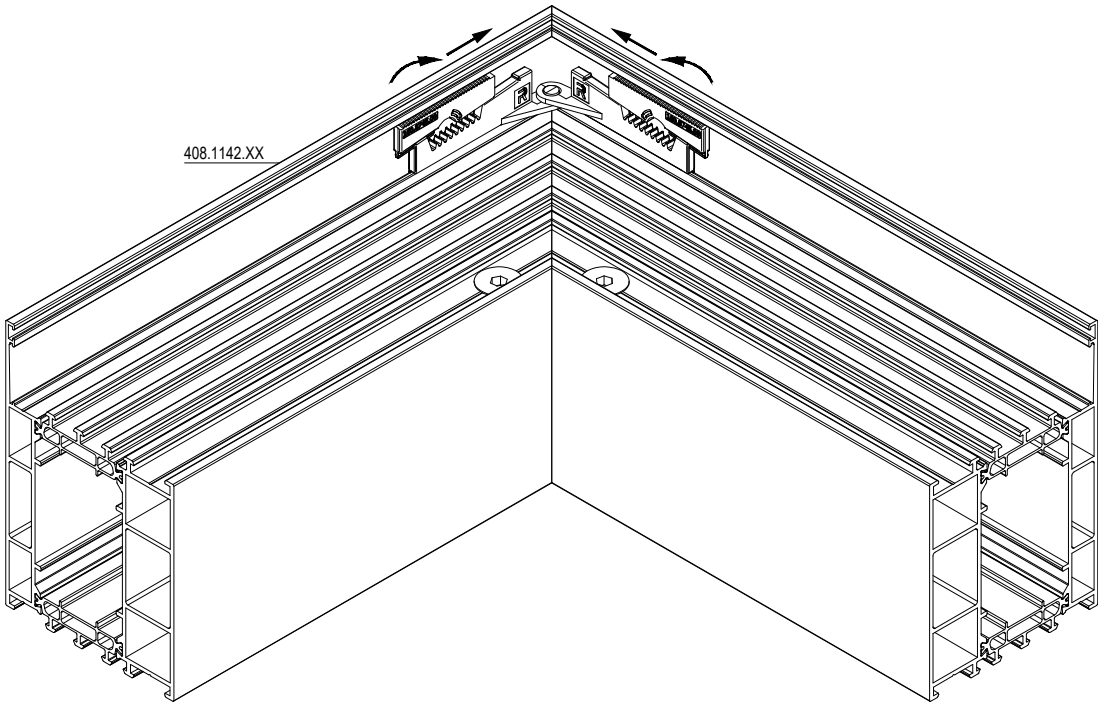

GLASS CORNER

ASSEMBLY GLASS CORNER

MASTERLINE 8-Fu

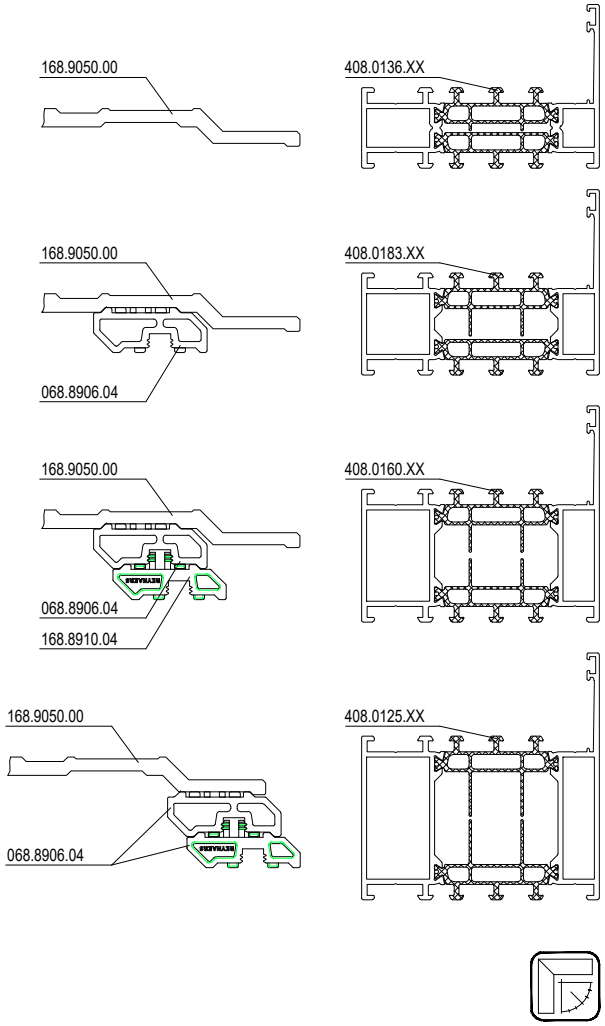

Outside Corner

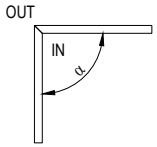

Inside Corner

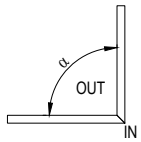

	α	X	Y
MIN	90	92.5	37.5
	95	87.0	36.6
	100	81.9	35.7
	105	77.2	34.9
	110	72.7	34.2
	115	68.6	33.5
	120	64.6	32.9
	125	60.9	32.2
	130	57.3	31.6
	135	53.9	31.0
	140	50.5	30.5
	145	47.3	30.0
MAX	150	44.2	29.5

Outside Corner

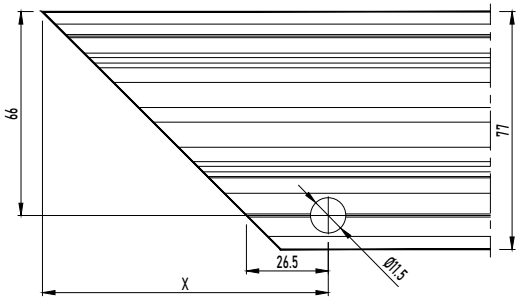

Inside Corner

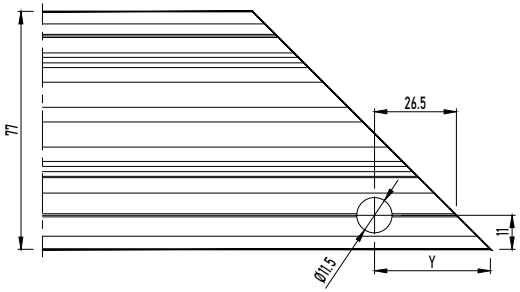

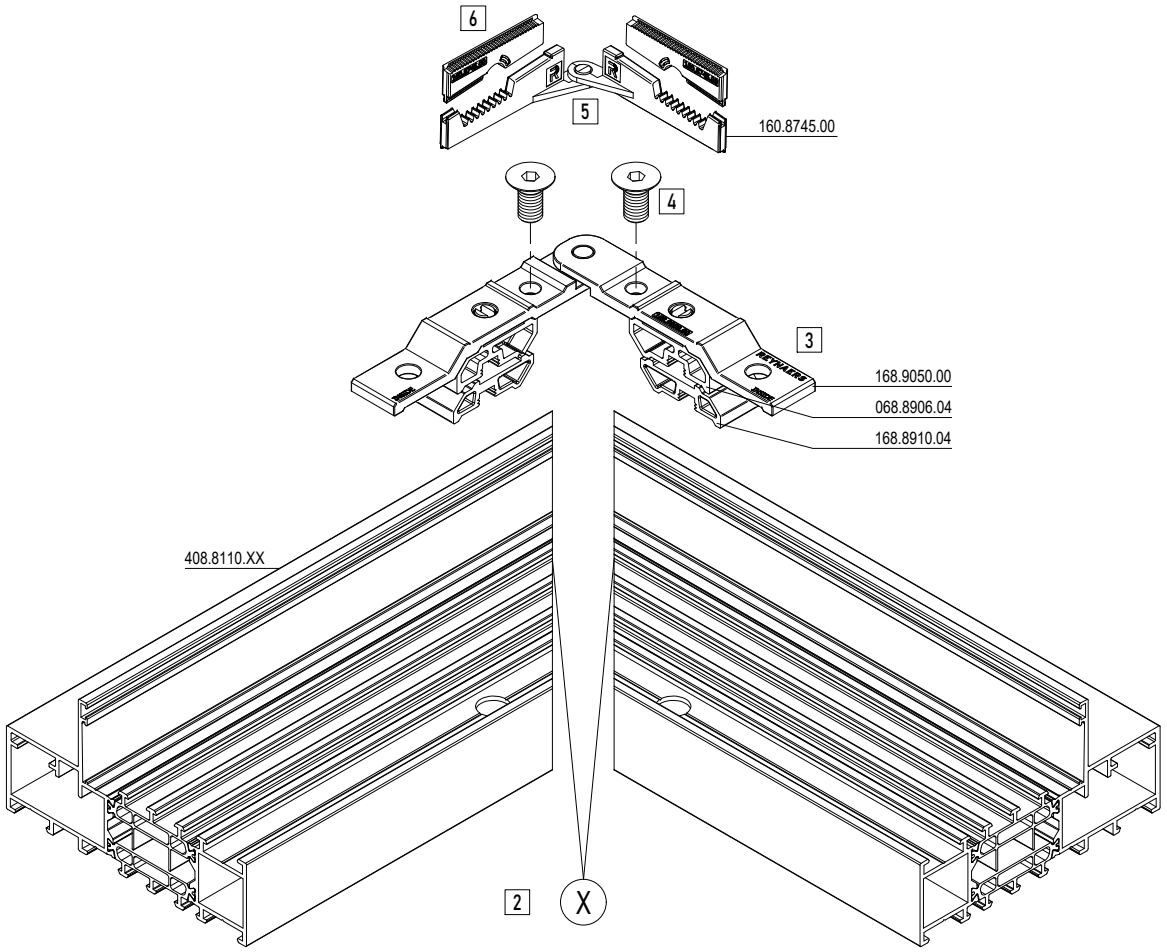

MONTAGEVOLGORDE L'ORDRE DE MONTAGE THE ORDER OF ASSEMBLY MONTAGEREIHENFOLGE	1 2 3 .
X	DICHTINGSMIDDEL MATIERE D'ETANCHEITE SEALING AGENT ABDICHTUNG

6 Aanschroeven met bits
Vissable cles coudees bits
To screw with bits
Anschrauben mit Bits

097.0754.00

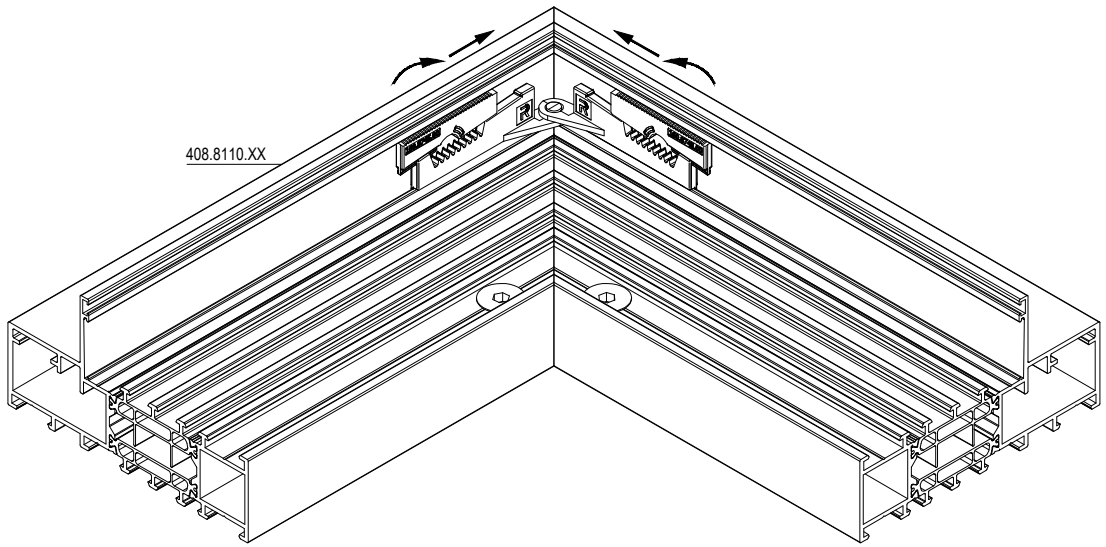

GLASS CORNER

ASSEMBLY GLASS CORNER

MASTERLINE 8-Fu

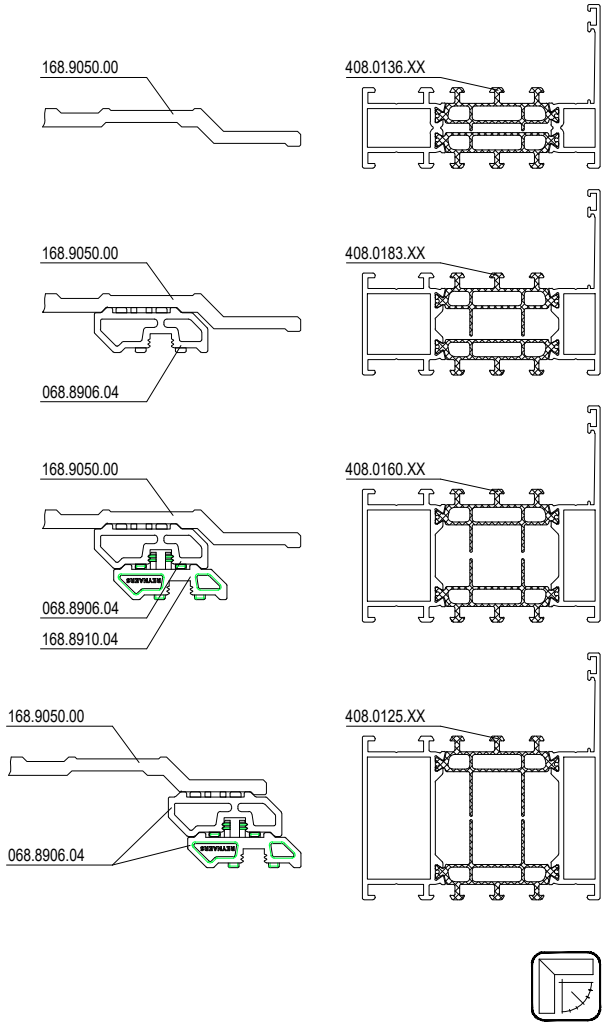

Outside Corner

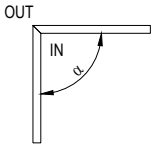

Inside Corner

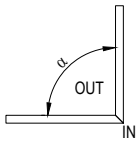

	α	X	Y
MIN	90	92.5	37.5
	95	87.0	36.6
	100	81.9	35.7
	105	77.2	34.9
	110	72.7	34.2
	115	68.6	33.5
	120	64.6	32.9
	125	60.9	32.2
	130	57.3	31.6
	135	53.9	31.0
	140	50.5	30.5
	145	47.3	30.0
MAX	150	44.2	29.5

Outside Corner

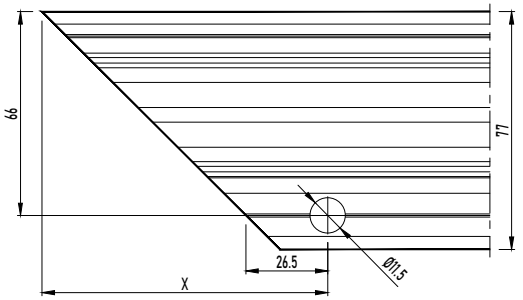

Inside Corner

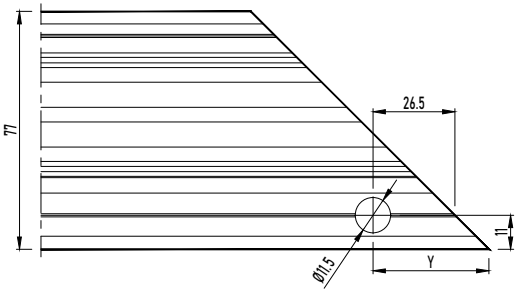

ASSEMBLY FRAME

ASSEMBLY OUTER-FRAME HIDDEN DRAINAGE

MASTERLINE 8-Fu

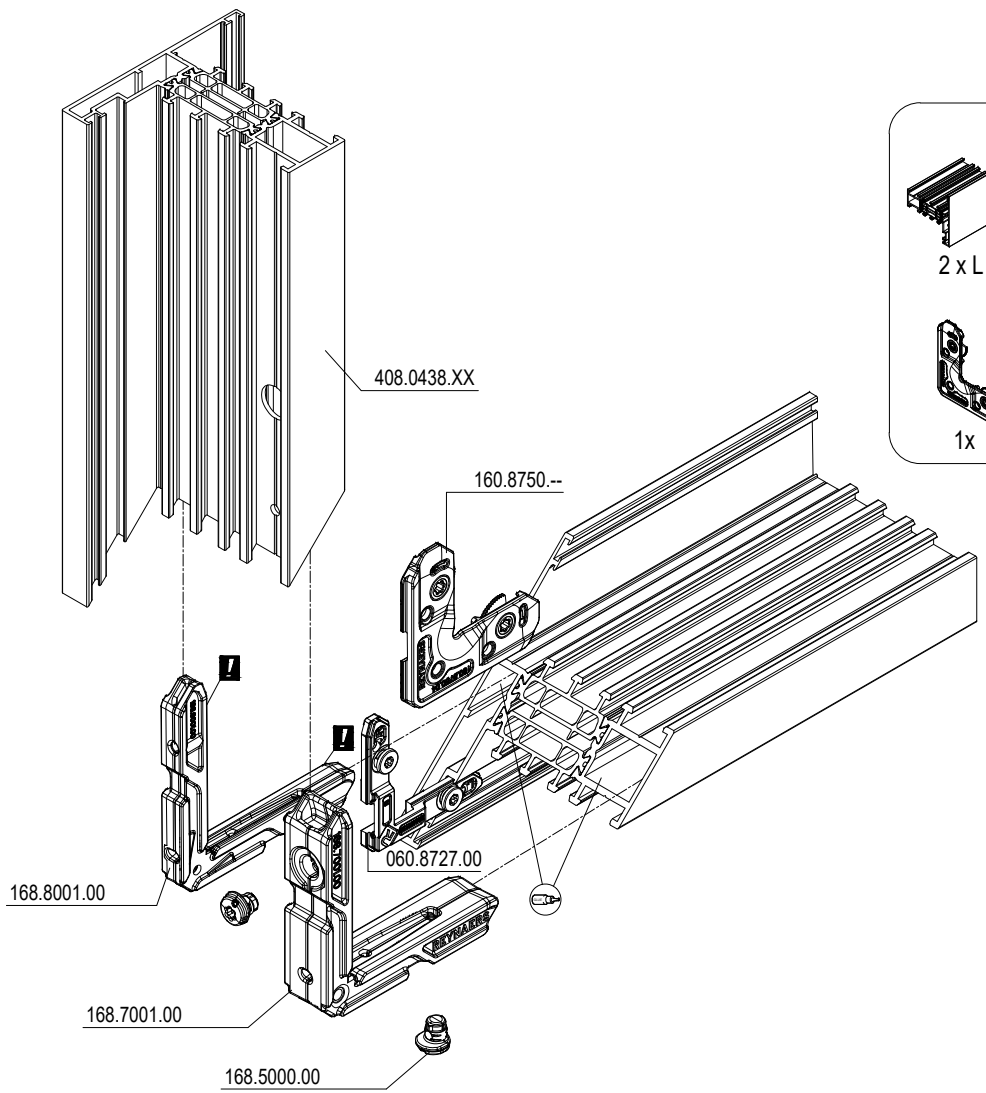

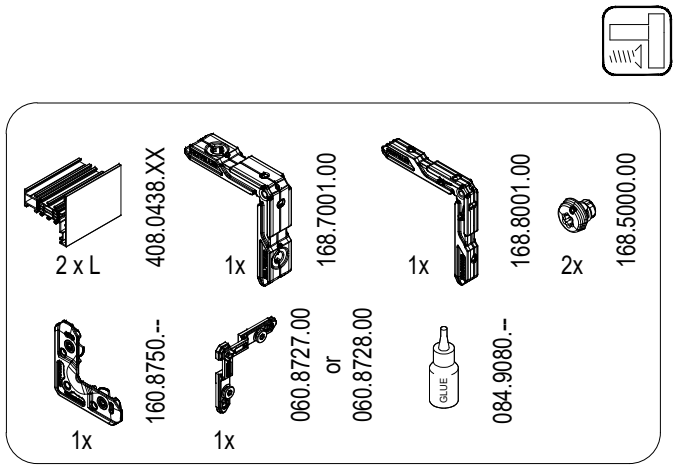

REYNASEAL DUO
REYNASEAL DUO
REYNASEAL DUO
REYNASEAL DUO

UITZONDERING: VERLIJMEN IN DE PROFIELKAMER
EXCEPTION: ENCOLLAGE DANS LA CHAMBRE DU PROFILE
EXCEPTION: GLUEING IN THE PROFILE CHAMBER
AUSNAHME: KLEBEREINSATZ IN DIE ECKWINKELKAMmER

BIJKOMENDE INFO VOORBEREIDING/VERWERKING -> ZIE 'VERWERKINGSVOORSCHRIFTEN' !
INFO COMPLEMENTAIRE PREPARATION/USINAGE -> VOIR 'PRESCRIPTIONS DE MISE EN OEUVRE' !
ADDITIONAL INFO PREPARATION/PROCESSING -> SEE 'PROCESSING DATA' !
ZUSAETZLICHE INFO VORBEREITUNG/VERARBEITUNG -> SIEHE 'VERARBEITUNGSVORSCHRIFTEN' !

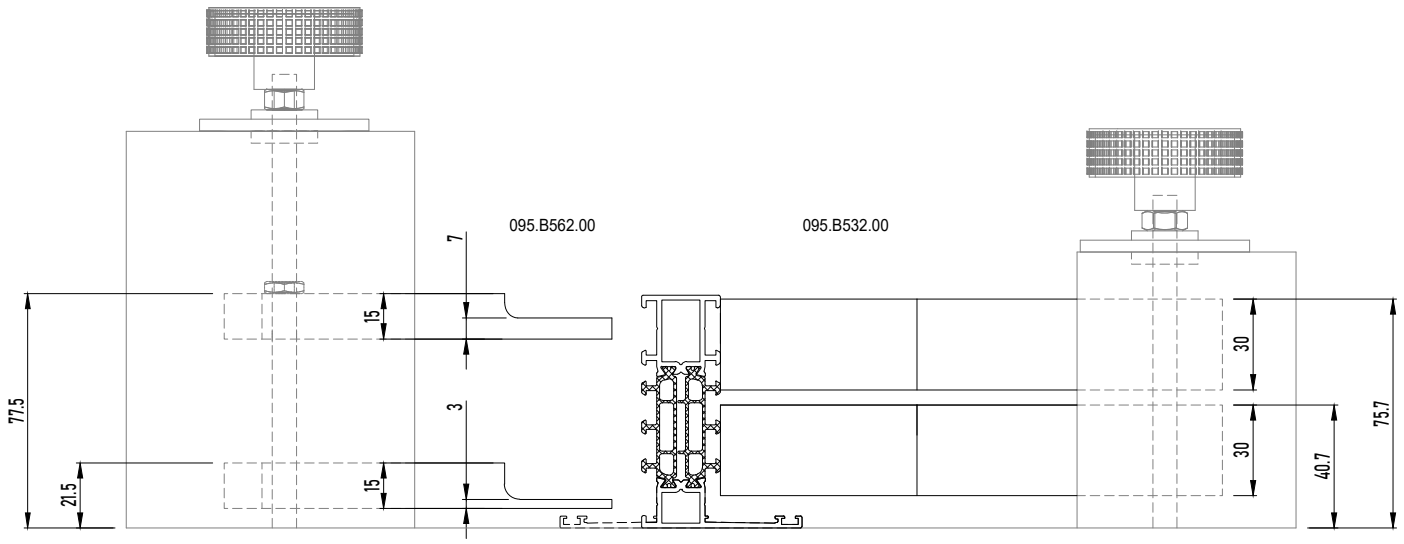

BIJKOMENDE INFO VOORBEREIDING/VERWERKING -> ZIE 'VERWERKINGSVOORSCHRIFTEN' !
INFO COMPLEMENTAIRE PREPARATION/USINAGE -> VOIR 'PRESCRIPTIONS DE MISE EN OEUVRE' !
ADDITIONAL INFO PREPARATION/PROCESSING -> SEE 'PROCESSING DATA' !
ZUSAETZLICHE INFO VORBEREITUNG/VERARBEITUNG -> SIEHE 'VERARBEITUNGSVORSCHRIFTEN' !

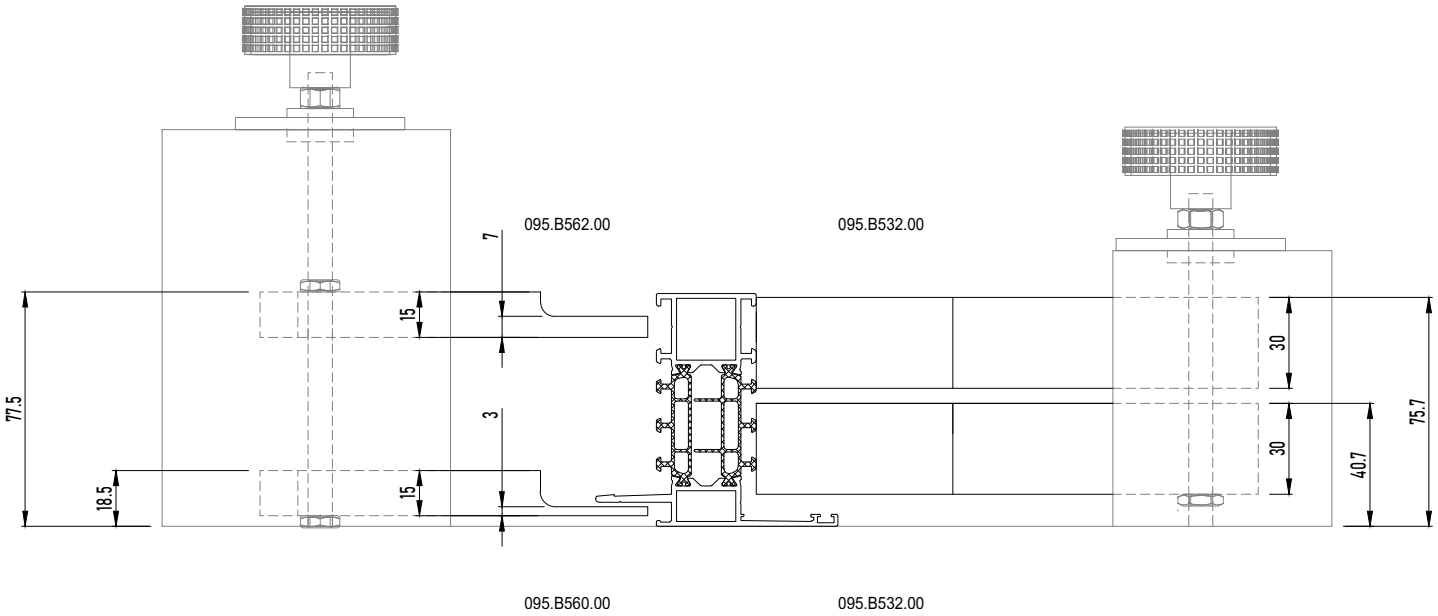

CORNER CRIMP

CRIMPING MACHINE 095.B500.00 | 095.B561.00, 095.B532.00, 095.B560.00

MASTERLINE 8-Fu

BIJKOMENDE INFO VOORBEREIDING/VERWERKING -> ZIE 'VERWERKINGSVOORSCHRIFTEN' !
INFO COMPLEMENTAIRE PREPARATION/USINAGE -> VOIR 'PRESCRIPTIONS DE MISE EN OEUVRE' !
ADDITIONAL INFO PREPARATION/PROCESSING -> SEE 'PROCESSING DATA' !
ZUSAETZLICHE INFO VORBEREITUNG/VERARBEITUNG -> SIEHE 'VERARBEITUNGSVORSCHRIFTEN' !

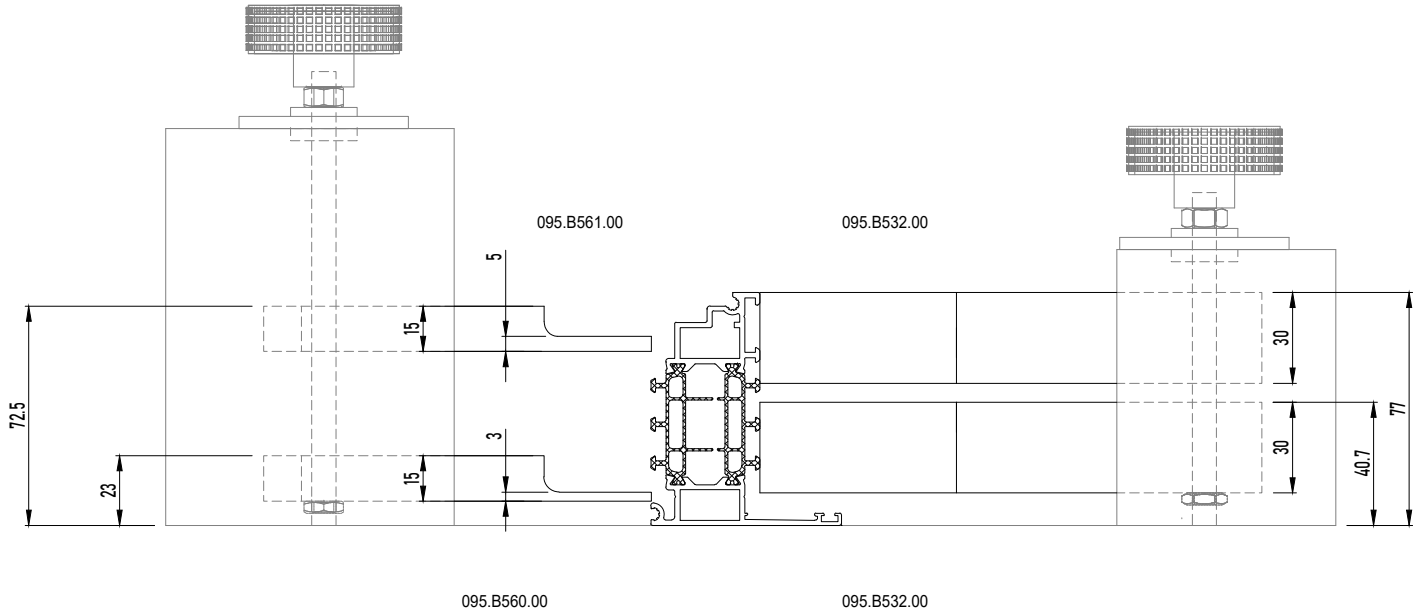

BIJKOMENDE INFO VOORBEREIDING/VERWERKING -> ZIE 'VERWERKINGSVOORSCHRIFTEN' !
INFO COMPLEMENTAIRE PREPARATION/USINAGE -> VOIR 'PRESCRIPTIONS DE MISE EN OEUVRE' !
ADDITIONAL INFO PREPARATION/PROCESSING -> SEE 'PROCESSING DATA' !
ZUSAETZLICHE INFO VORBEREITUNG/VERARBEITUNG -> SIEHE 'VERARBEITUNGSVORSCHRIFTEN' !

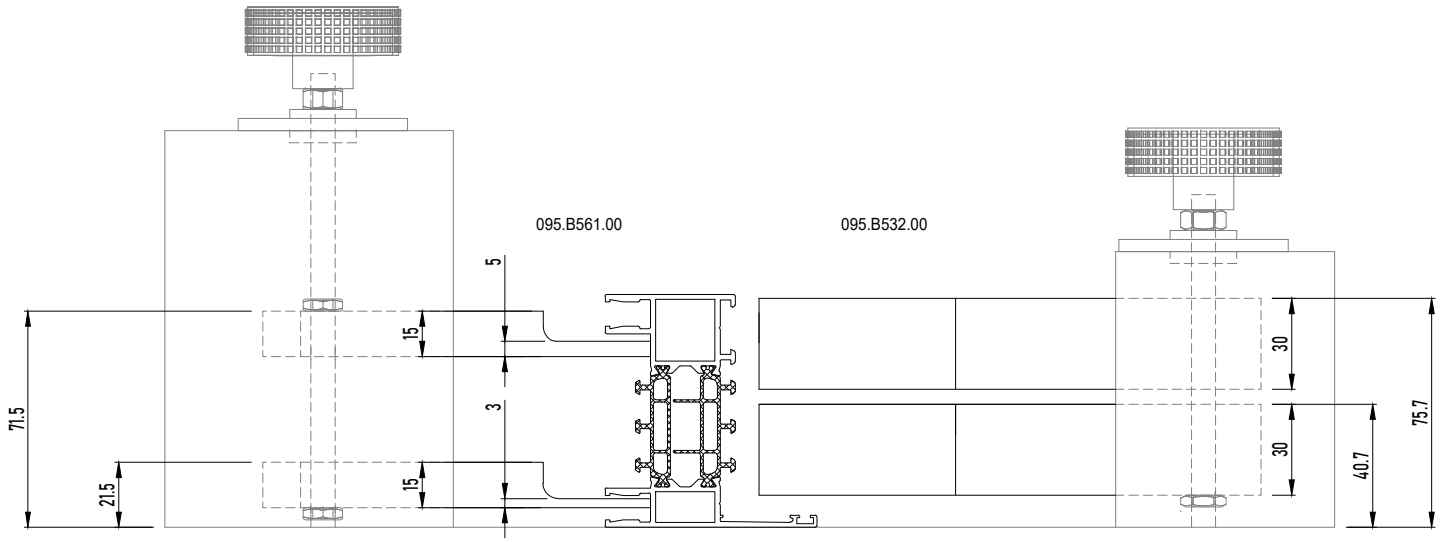

CORNER CRIMP

CRIMPING MACHINE 095.B500.00 | 095.B562.00, 095.B532.00, 095.B560.00

MASTERLINE 8-Fu

BIJKOMENDE INFO VOORBEREIDING/VERWERKING -> ZIE 'VERWERKINGSVOORSCHRIFTEN' !
INFO COMPLEMENTAIRE PREPARATION/USINAGE -> VOIR 'PRESCRIPTIONS DE MISE EN OEUVRE' !
ADDITIONAL INFO PREPARATION/PROCESSING -> SEE 'PROCESSING DATA' !
ZUSAETZLICHE INFO VORBEREITUNG/VERARBEITUNG -> SIEHE 'VERARBEITUNGSVORSCHRIFTEN' !

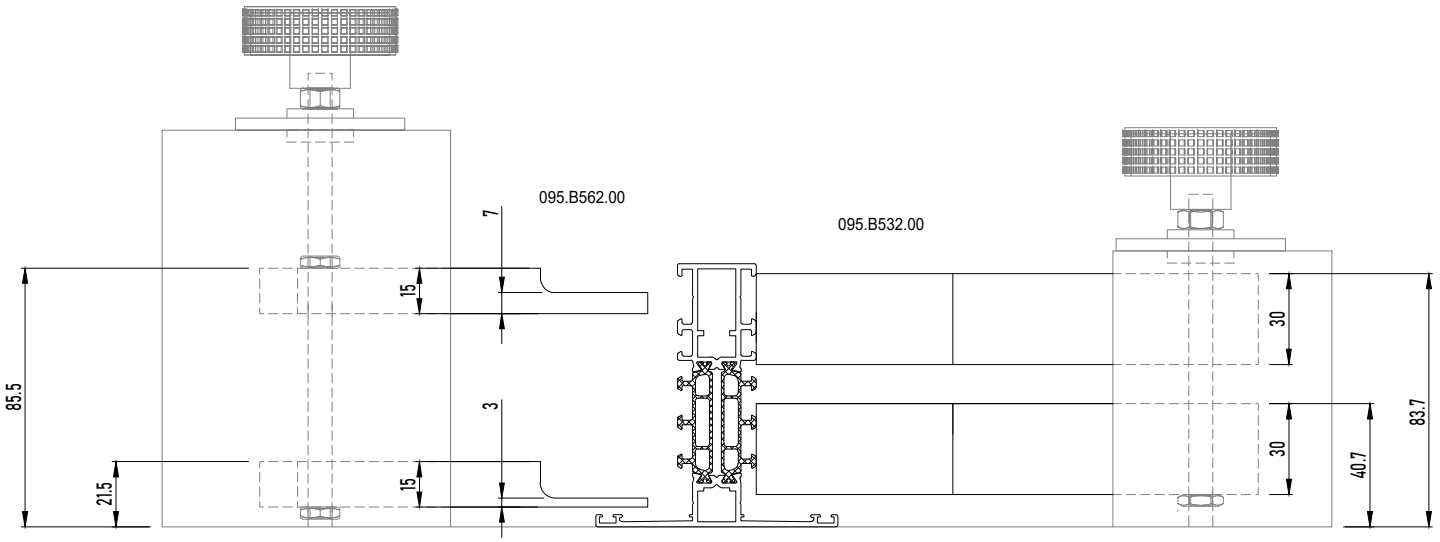

CORNER CRIMP

CRIMPING MACHINE 095.B500.00 | 095.B560.00, 095.B532.00, 095.B562.00

MASTERLINE 8-Fu

BIJKOMENDE INFO VOORBEREIDING/VERWERKING -> ZIE 'VERWERKINGSVOORSCHRIFTEN' !
INFO COMPLEMENTAIRE PREPARATION/USINAGE -> VOIR 'PRESCRIPTIONS DE MISE EN OEUVRE' !
ADDITIONAL INFO PREPARATION/PROCESSING -> SEE 'PROCESSING DATA' !
ZUSAETZLICHE INFO VORBEREITUNG/VERARBEITUNG -> SIEHE 'VERARBEITUNGSVORSCHRIFTEN' !

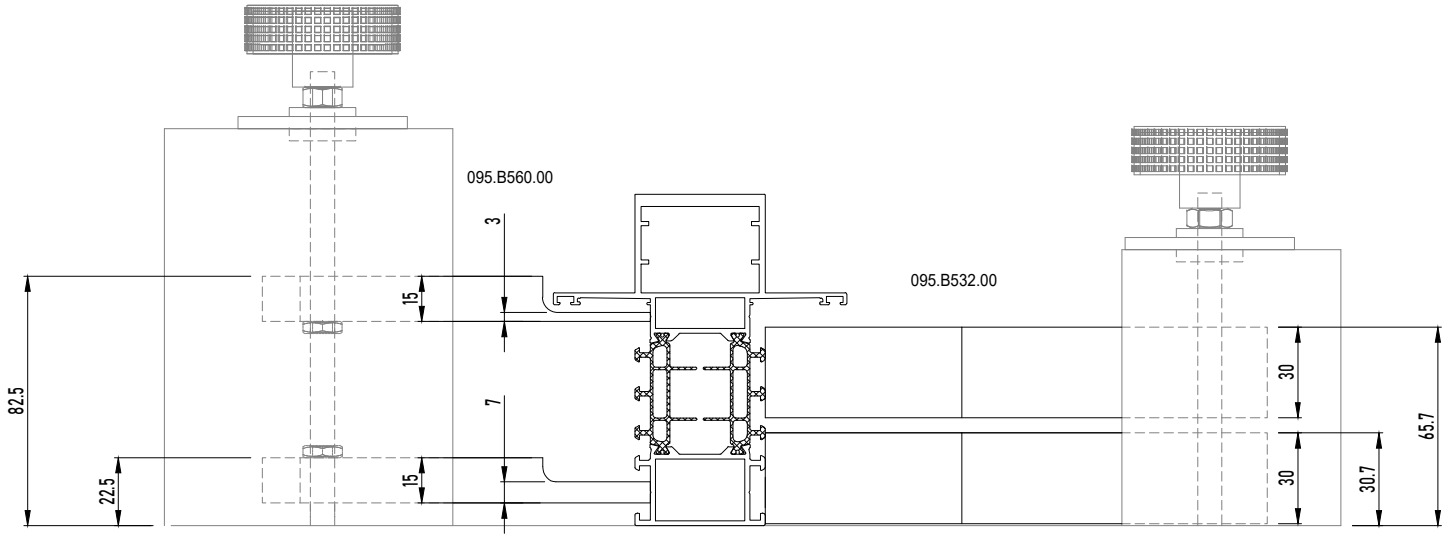

CORNER CRIMP

OUTER FRAME ASSEMBLY MEDIUM TUBULAR | 095.B560.00, 095.B562.00, 095.B532.00

MASTERLINE 8-Fu

BIJKOMENDE INFO VOORBEREIDING/VERWERKING -> ZIE 'VERWERKINGSVOORSCHRIFTEN' !
INFO COMPLEMENTAIRE PREPARATION/USINAGE -> VOIR 'PRESCRIPTIONS DE MISE EN OEUVRE' !
ADDITIONAL INFO PREPARATION/PROCESSING -> SEE 'PROCESSING DATA' !
ZUSAETZLICHE INFO VORBEREITUNG/VERARBEITUNG -> SIEHE 'VERARBEITUNGSVORSCHRIFTEN' !

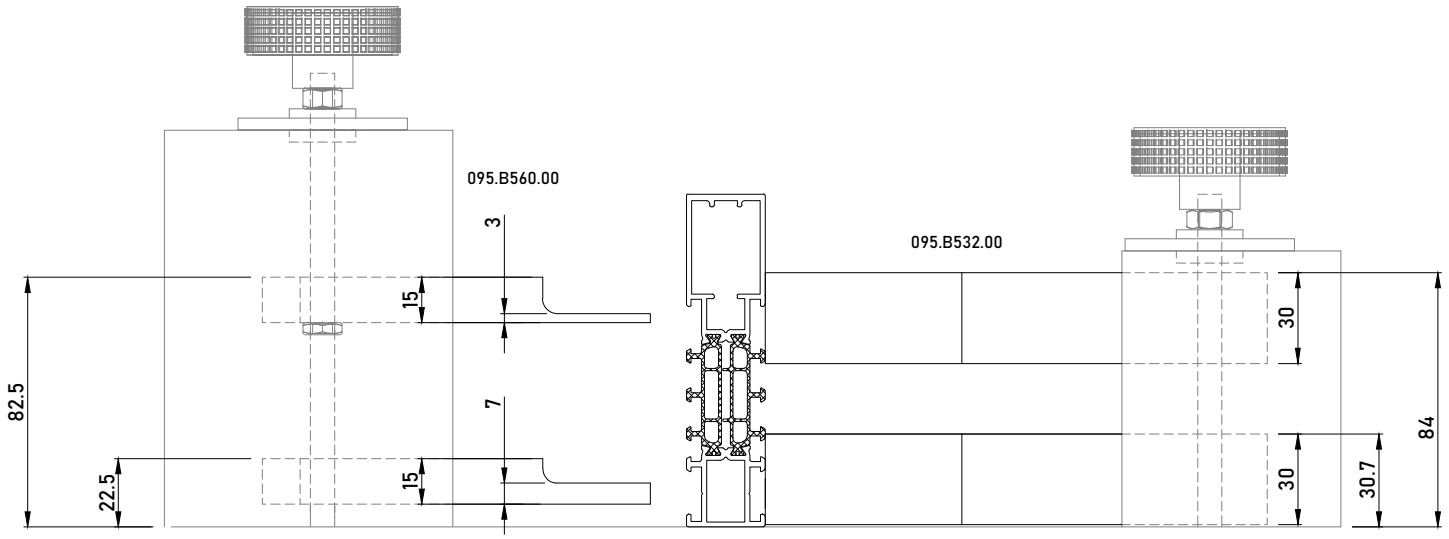

095.B562.00 095.B532.00

BIJKOMENDE INFO VOORBEREIDING/VERWERKING -> ZIE 'VERWERKINGSVOORSCHRIFTEN' !
INFO COMPLEMENTAIRE PREPARATION/USINAGE -> VOIR 'PRESCRIPTIONS DE MISE EN OEUVRE' !
ADDITIONAL INFO PREPARATION/PROCESSING -> SEE 'PROCESSING DATA' !
ZUSAETZLICHE INFO VORBEREITUNG/VERARBEITUNG -> SIEHE 'VERARBEITUNGSVORSCHRIFTEN' !

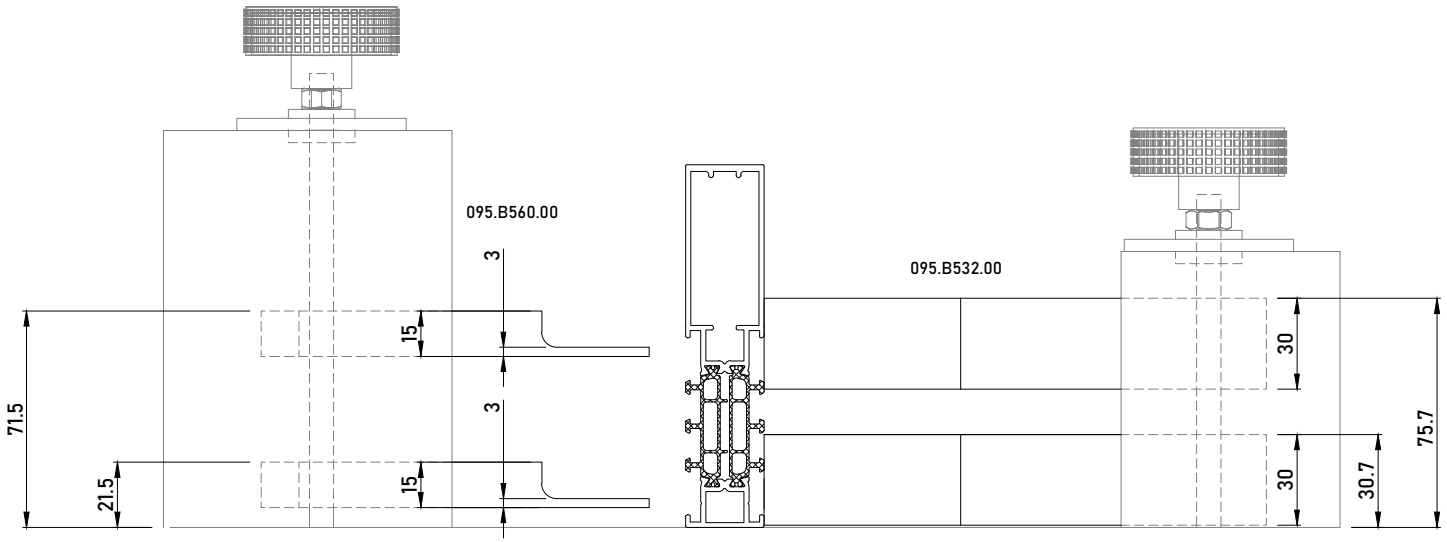

095.B562.00 095.B532.00

BIJKOMENDE INFO VOORBEREIDING/VERWERKING -> ZIE 'VERWERKINGSVOORSCHRIFTEN' !
INFO COMPLEMENTAIRE PREPARATION/USINAGE -> VOIR 'PRESCRIPTIONS DE MISE EN OEUVRE' !
ADDITIONAL INFO PREPARATION/PROCESSING -> SEE 'PROCESSING DATA' !
ZUSAETZLICHE INFO VORBEREITUNG/VERARBEITUNG -> SIEHE 'VERARBEITUNGSVORSCHRIFTEN' !

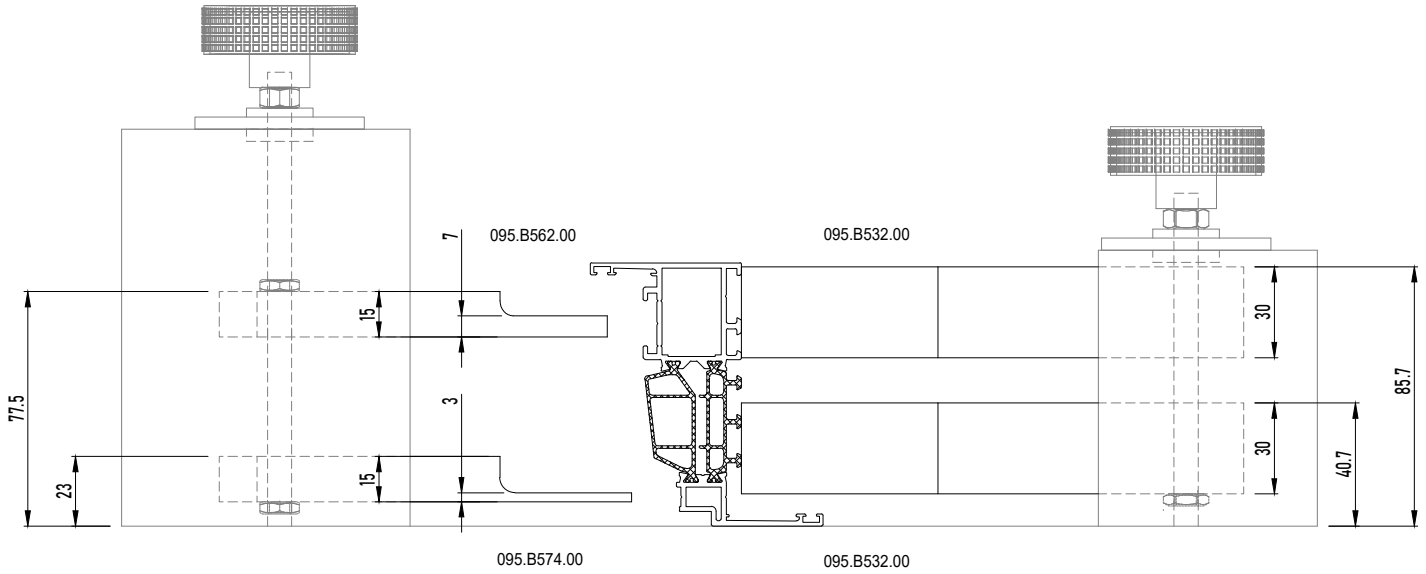

BIJKOMENDE INFO VOORBEREIDING/VERWERKING -> ZIE 'VERWERKINGSVOORSCHRIFTEN' !
INFO COMPLEMENTAIRE PREPARATION/USINAGE -> VOIR 'PRESCRIPTIONS DE MISE EN OEUVRE' !
ADDITIONAL INFO PREPARATION/PROCESSING -> SEE 'PROCESSING DATA' !
ZUSAETZLICHE INFO VORBEREITUNG/VERARBEITUNG -> SIEHE 'VERARBEITUNGSVORSCHRIFTEN' !

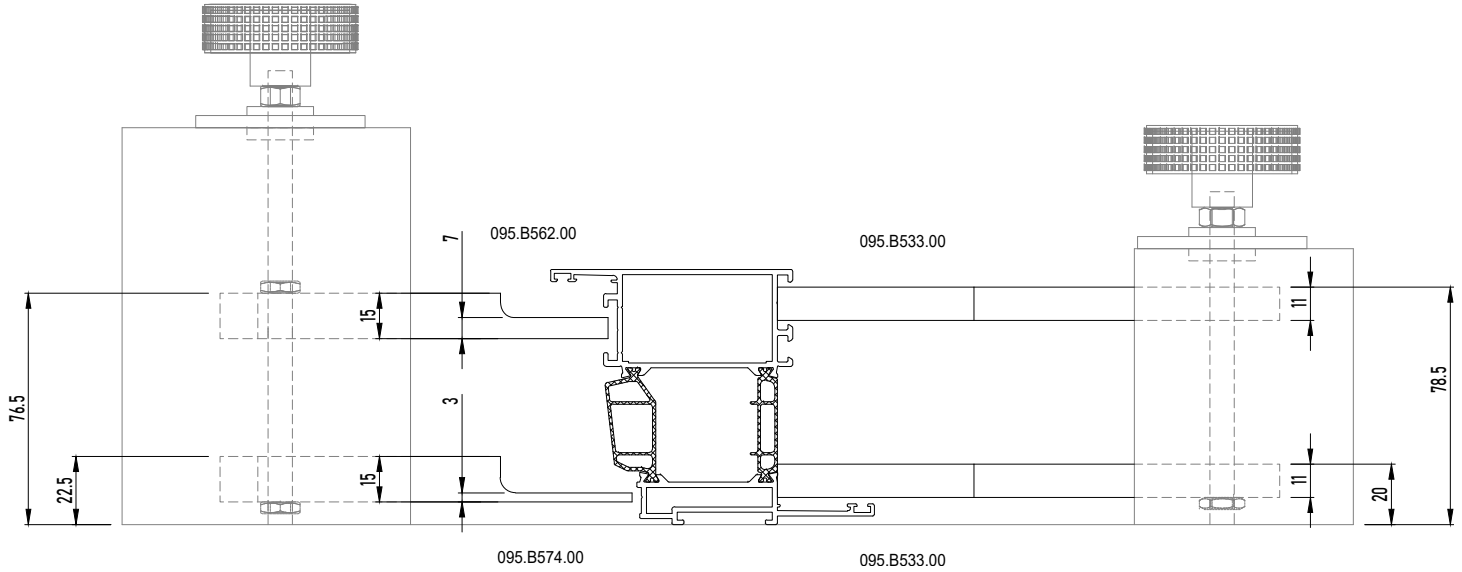

CORNER CRIMP

CRIMPING MACHINE 095.H800.00 | 095.H853.00, 095.H850.00, 095.H820.00

MASTERLINE 8-Fu

408.0825.XX 408.0826.XX 408.0828.XX	508.0825.XX 508.0826.XX 508.0828.XX

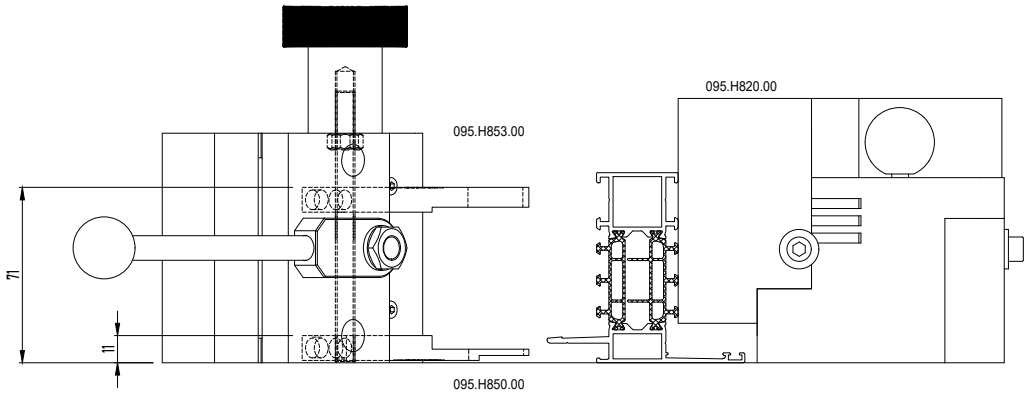

BIJKOMENDE INFO VOORBEREIDING/VERWERKING -> ZIE 'VERWERKINGSVOORSCHRIFTEN' !
INFO COMPLEMENTAIRE PREPARATION/USINAGE -> VOIR 'PRESCRIPTIONS DE MISE EN OEUVRE' !
ADDITIONAL INFO PREPARATION/PROCESSING -> SEE 'PROCESSING DATA' !
ZUSAETZLICHE INFO VORBEREITUNG/VERARBEITUNG -> SIEHE 'VERARBEITUNGSVORSCHRIFTEN' !

408.0885.XX 408.0886.XX	508.0885.XX 508.0886.XX

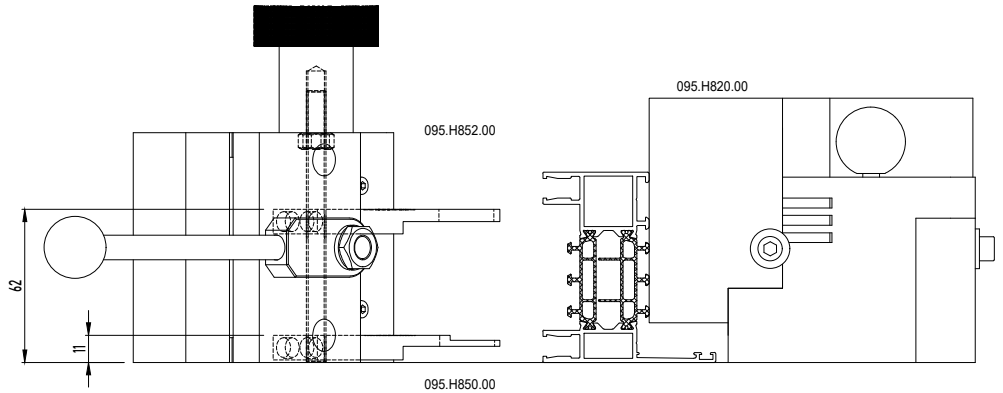

BIJKOMENDE INFO VOORBEREIDING/VERWERKING -> ZIE 'VERWERKINGSVOORSCHRIFTEN' !
INFO COMPLEMENTAIRE PREPARATION/USINAGE -> VOIR 'PRESCRIPTIONS DE MISE EN OEUVRE' !
ADDITIONAL INFO PREPARATION/PROCESSING -> SEE 'PROCESSING DATA' !
ZUSAETZLICHE INFO VORBEREITUNG/VERARBEITUNG -> SIEHE 'VERARBEITUNGSVORSCHRIFTEN' !

	
408.4001.XX	508.4001.XX

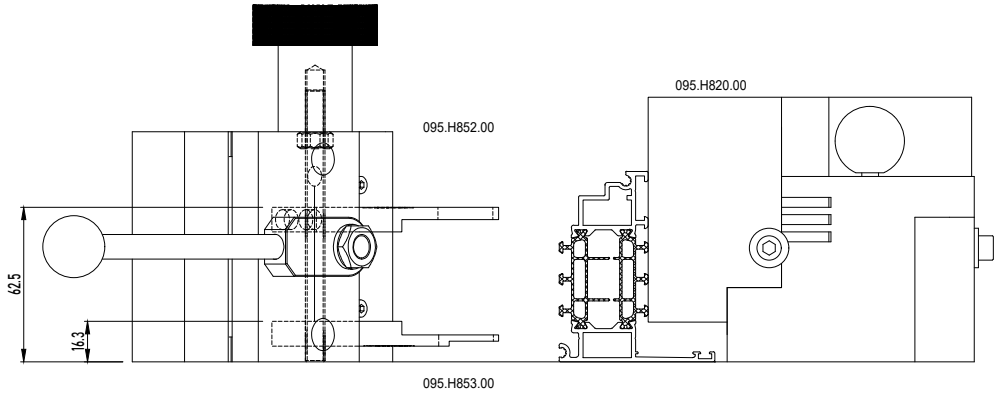

BIJKOMENDE INFO VOORBEREIDING/VERWERKING -> ZIE 'VERWERKINGSVOORSCHRIFTEN' !
INFO COMPLEMENTAIRE PREPARATION/USINAGE -> VOIR 'PRESCRIPTIONS DE MISE EN OEUVRE' !
ADDITIONAL INFO PREPARATION/PROCESSING -> SEE 'PROCESSING DATA' !
ZUSAETZLICHE INFO VORBEREITUNG/VERARBEITUNG -> SIEHE 'VERARBEITUNGSVORSCHRIFTEN' !



408.0136.XX	508.0136.XX
408.0183.XX	508.0183.XX
408.0160.XX	508.0160.XX
408.0169.XX	508.0169.XX
408.0125.XX	508.0125.XX
408.0113.XX	508.0113.XX
408.0120.XX	508.0120.XX
408.0165.XX	508.0165.XX
408.0114.XX	508.0114.XX
408.0442.XX	508.0442.XX
408.0443.XX	508.0443.XX
408.0444.XX	508.0444.XX
408.0452.XX	508.0111.XX
408.0453.XX	508.0890.XX
408.0454.XX	508.0892.XX
408.0111.XX	508.0894.XX
408.0890.XX	408.0118.XX
408.0892.XX	
408.0894.XX	
408.0118.XX	
408.8160.XX	
408.3111.XX	

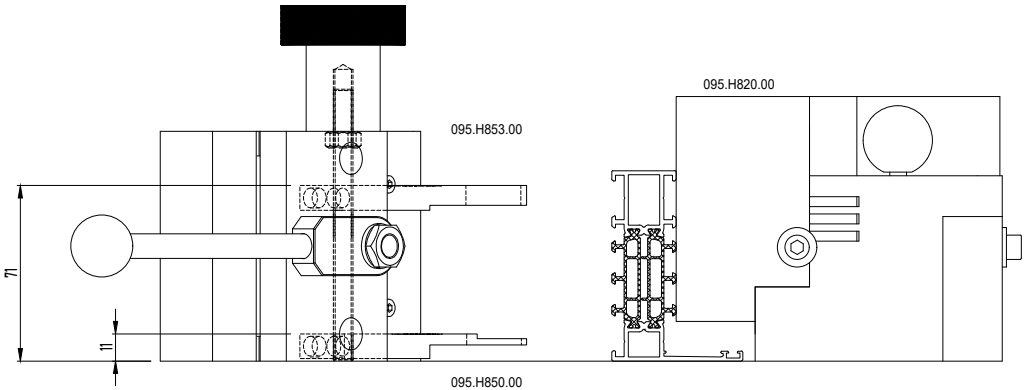

BIJKOMENDE INFO VOORBEREIDING/VERWERKING -> ZIE 'VERWERKINGSVOORSCHRIFTEN' !
INFO COMPLEMENTAIRE PREPARATION/USINAGE -> VOIR 'PRESCRIPTIONS DE MISE EN OEUVRE' !
ADDITIONAL INFO PREPARATION/PROCESSING -> SEE 'PROCESSING DATA' !
ZUSAETZLICHE INFO VORBEREITUNG/VERARBEITUNG -> SIEHE 'VERARBEITUNGSVORSCHRIFTEN' !



CORNER CRIMP

CRIMPING MACHINE 095.H800.00 | 095.H853.00, 095.H820.00, 095.H862.00

MASTERLINE 8-Fu

408.0102.XX 408.0192.XX 408.0112.XX	508.0102.XX 508.0192.XX 508.0112.XX

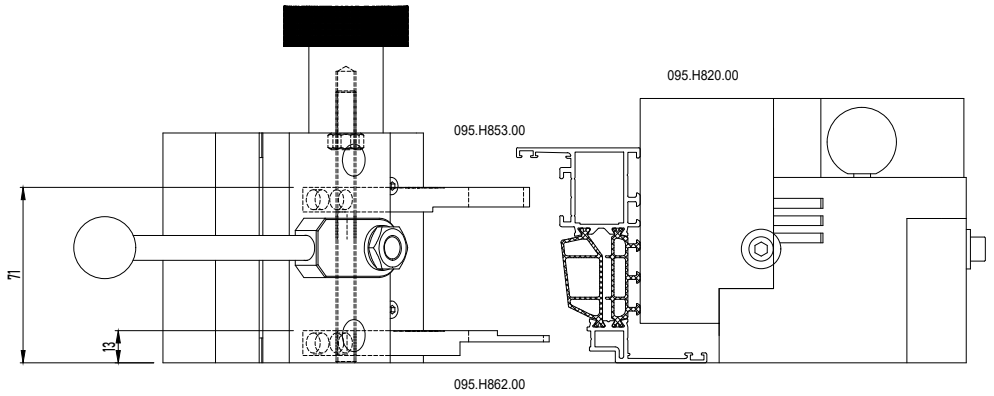

BIJKOMENDE INFO VOORBEREIDING/VERWERKING -> ZIE 'VERWERKINGSVOORSCHRIFTEN' !
INFO COMPLEMENTAIRE PREPARATION/USINAGE -> VOIR 'PRESCRIPTIONS DE MISE EN OEUVRE' !
ADDITIONAL INFO PREPARATION/PROCESSING -> SEE 'PROCESSING DATA' !
ZUSAETZLICHE INFO VORBEREITUNG/VERARBEITUNG -> SIEHE 'VERARBEITUNGSVORSCHRIFTEN' !

CORNER CRIMP

CRIMPING MACHINE 095.H800.00 | 095.H853.00, 095.H820.00, 095.H862.00

MASTERLINE 8-Fu



408.0266.XX

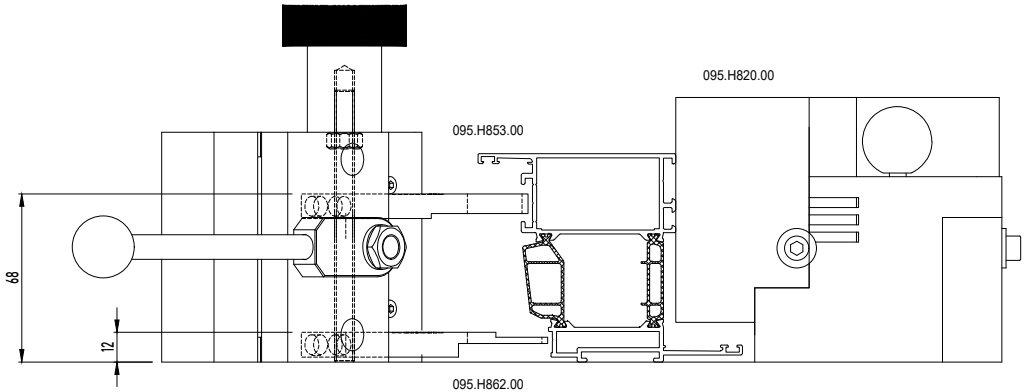

BIJKOMENDE INFO VOORBEREIDING/VERWERKING -> ZIE 'VERWERKINGSVOORSCHRIFTEN' !
INFO COMPLEMENTAIRE PREPARATION/USINAGE -> VOIR 'PRESCRIPTIONS DE MISE EN OEUVRE' !
ADDITIONAL INFO PREPARATION/PROCESSING -> SEE 'PROCESSING DATA' !
ZUSAETZLICHE INFO VORBEREITUNG/VERARBEITUNG -> SIEHE 'VERARBEITUNGSVORSCHRIFTEN' !



CORNER CRIMP

CRIMPING MACHINE 095.H800.00 | 095.H862.00, 095.H820.00, 095.H853.00

MASTERLINE 8-Fu

408.1051.XX 408.0041.XX	508.1051.XX

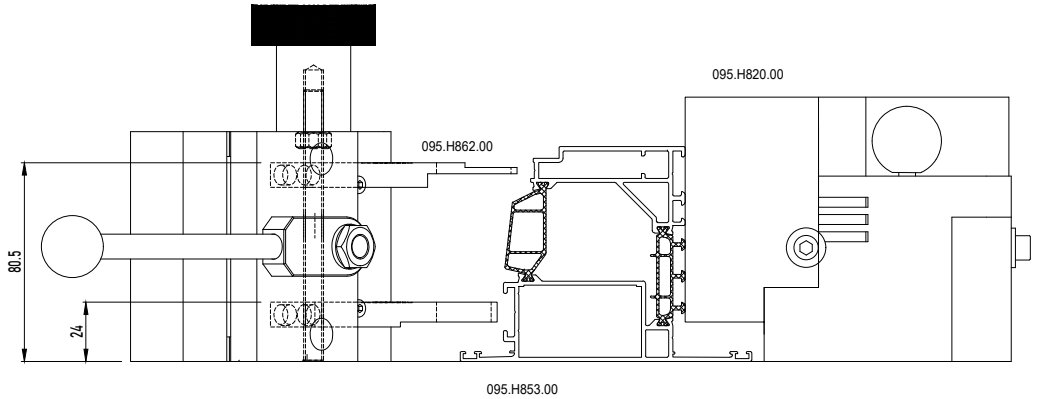

BIJKOMENDE INFO VOORBEREIDING/VERWERKING -> ZIE 'VERWERKINGSVOORSCHRIFTEN' !
INFO COMPLEMENTAIRE PREPARATION/USINAGE -> VOIR 'PRESCRIPTIONS DE MISE EN OEUVRE' !
ADDITIONAL INFO PREPARATION/PROCESSING -> SEE 'PROCESSING DATA' !
ZUSAETZLICHE INFO VORBEREITUNG/VERARBEITUNG -> SIEHE 'VERARBEITUNGSVORSCHRIFTEN' !

CORNER CRIMP

CRIMPING MACHINE 095.H800.00 | 095.H853.00, 095.H820.00, 095.H850.00

MASTERLINE 8-Fu

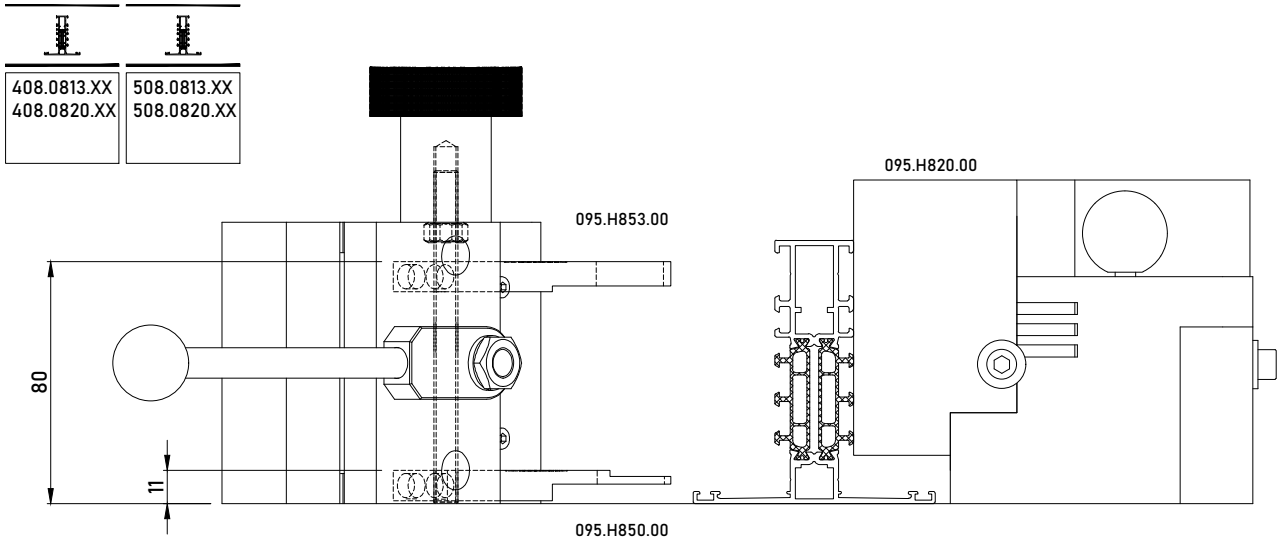

BIJKOMENDE INFO VOORBEREIDING/VERWERKING -> ZIE 'VERWERKINGSVOORSCHRIFTEN' !
INFO COMPLEMENTAIRE PREPARATION/USINAGE -> VOIR 'PRESCRIPTIONS DE MISE EN OEUVRE' !
ADDITIONAL INFO PREPARATION/PROCESSING -> SEE PROCESSING DATA' !
ZUSAETZLICHE INFO VORBEREITUNG/VERARBEITUNG -> SIEHE 'VERARBEITUNGSVORSCHRIFTEN' !

CORNER CRIMP

CRIMPING MACHINE 095.H800.00 | 095.H850.00, 095.H853.00, 097.W100.00

MASTERLINE 8-Fu

408.0100.XX	508.0100.XX
408.0109.XX	508.0109.XX
408.0110.XX	508.0110.XX
408.0161.XX	508.0161.XX
408.0449.XX	508.0449.XX
408.0117.XX	508.0117.XX
408.3100.XX	508.3100.XX
408.3109.XX	508.3109.XX
408.3110.XX	508.3110.XX
408.0450.XX	508.0450.XX

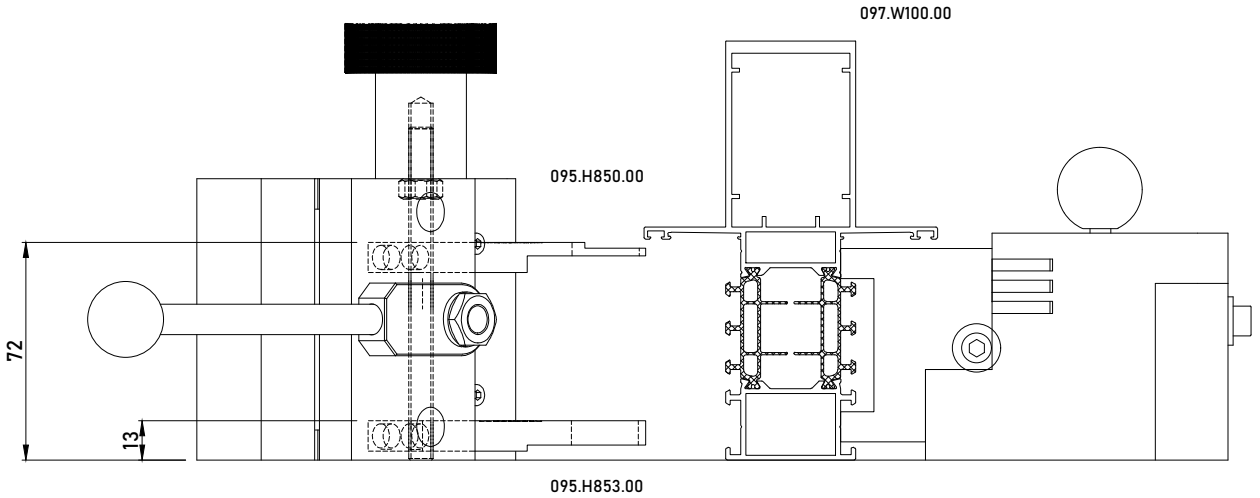

BIJKOMENDE INFO VOORBEREIDING/VERWERKING -> ZIE 'VERWERKINGSVOORSCHRIFTEN' !
INFO COMPLEMENTAIRE PREPARATION/USINAGE -> VOIR 'PRESCRIPTIONS DE MISE EN OEUVRE' !
ADDITIONAL INFO PREPARATION/PROCESSING -> SEE PROCESSING DATA' !
ZUSAETZLICHE INFO VORBEREITUNG/VERARBEITUNG -> SIEHE 'VERARBEITUNGSVORSCHRIFTEN' !



CORNER CRIMP

CRIMPING MACHINE 095.H800.00 | 095.E000.00, 097.0205.00, 097.W100.00, 095.H850.00, 095.H853.00

MASTERLINE 8-Fu

408.0161.XX 408.0162.XX 408.0163.XX 408.8139.XX 408.8110.XX 408.8130.XX 408.8155.XX 406.0327.XX	508.0161.XX 508.0162.XX 508.0163.XX 508.8139.XX 408.8110.XX 508.8130.XX 508.8155.XX 508.8180.XX

	--
	095.C300.00 or 095.E000.00 or 095.E010.00
	097.0205.00

1

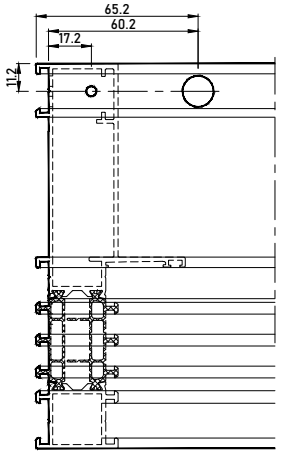

2

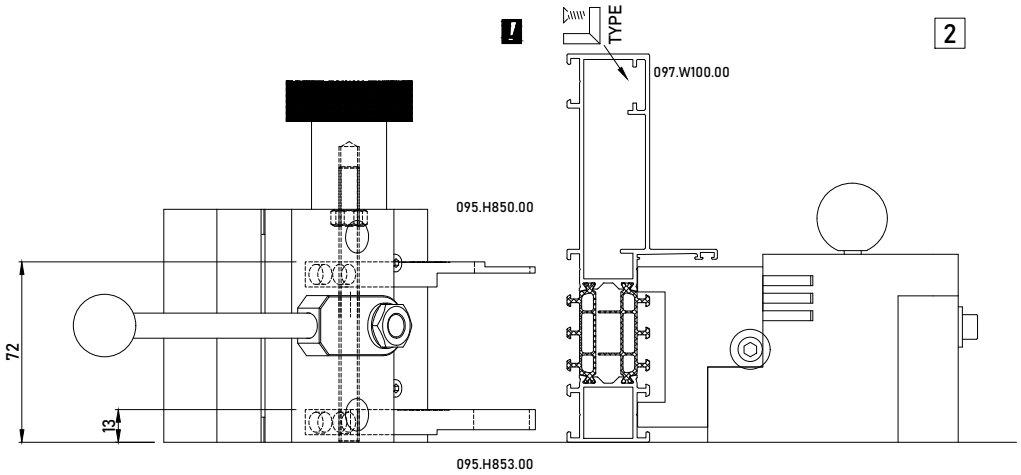

BIJKOMENDE INFO VOORBEREIDING/VERWERKING -> ZIE 'VERWERKINGSVOORSCHRIFTEN' !
INFO COMPLEMENTAIRE PREPARATION/USINAGE -> VOIR 'PRESCRIPTIONS DE MISE EN OEUVRE' !
ADDITIONAL INFO PREPARATION/PROCESSING -> SEE PROCESSING DATA' !
ZUSAETZLICHE INFO VORBEREITUNG/VERARBEITUNG -> SIEHE 'VERARBEITUNGSVORSCHRIFTEN' !

MONTAGEVOLGORDE
L 'ORDRE DE MONTAGE
THE ORDER OF ASSEMBLY
MONTAGEREIHENFOLGE
1 2 3 .

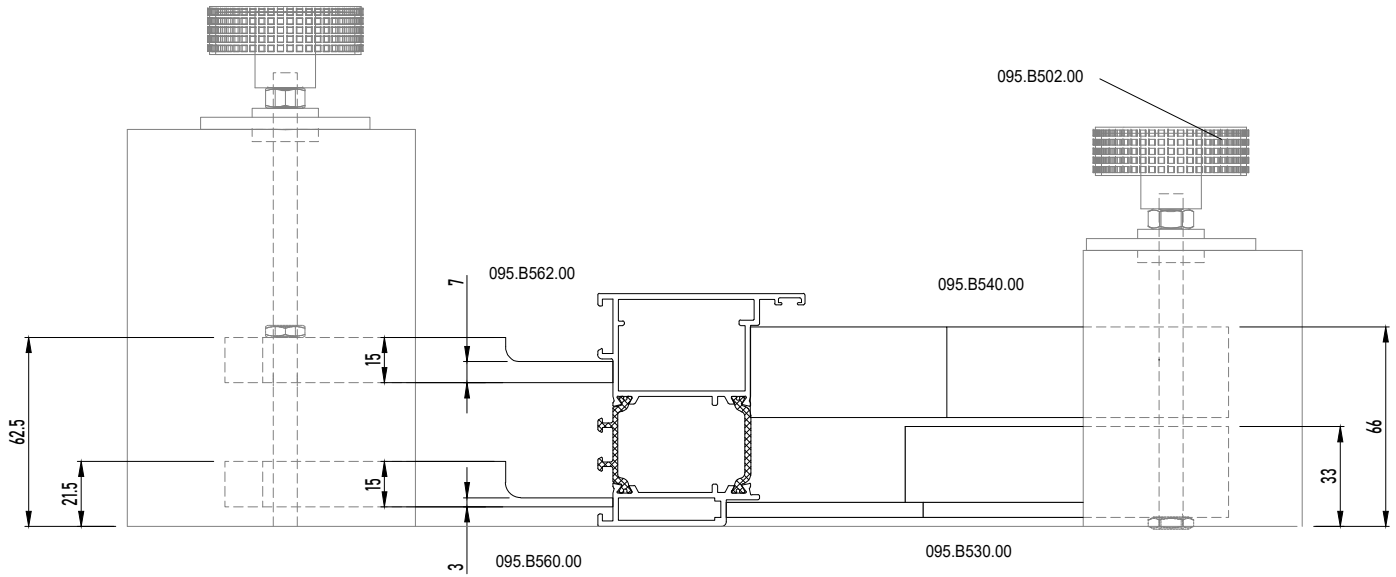

BIJKOMENDE INFO VOORBEREIDING/VERWERKING -> ZIE 'VERWERKINGSVOORSCHRIFTEN' !
INFO COMPLEMENTAIRE PREPARATION/USINAGE -> VOIR 'PRESCRIPTIONS DE MISE EN OEUVRE' !
ADDITIONAL INFO PREPARATION/PROCESSING -> SEE 'PROCESSING DATA' !
ZUSAETZLICHE INFO VORBEREITUNG/VERARBEITUNG -> SIEHE 'VERARBEITUNGSVORSCHRIFTEN' !



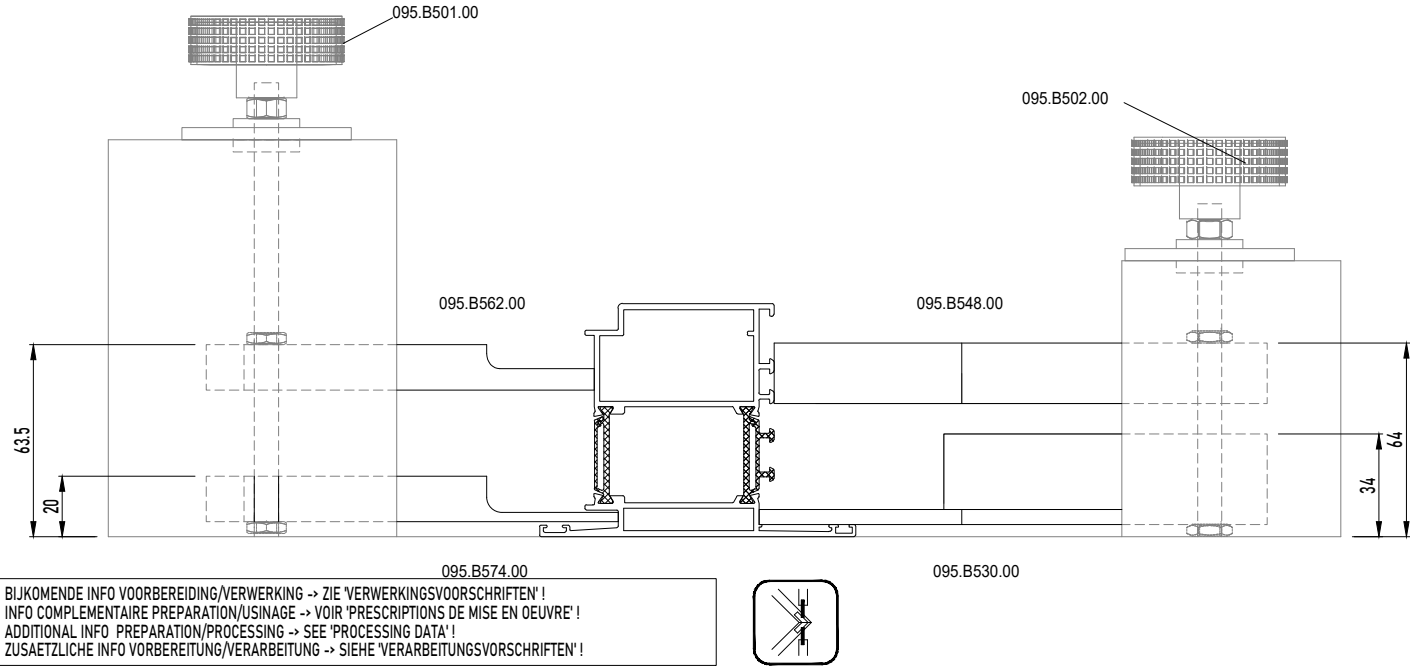
095.B501.00
095.B502.00
095.B562.00
095.B548.00
63.5
20
64
34
095.B574.00
095.B530.00
BIJKOMENDE INFO VOORBEREIDING/VERWERKING -> ZIE 'VERWERKINGSVOORSCHRIFTEN' !
INFO COMPLEMENTAIRE PREPARATION/USINAGE -> VOIR 'PRESCRIPTIONS DE MISE EN OEUVRE' !
ADDITIONAL INFO PREPARATION/PROCESSING -> SEE 'PROCESSING DATA' !
ZUSAETZLICHE INFO VORBEREITUNG/VERARBEITUNG -> SIEHE 'VERARBEITUNGSVORSCHRIFTEN' !

CORNER CRIMP

CRIMPING MACHINE 095.B500.00

MASTERLINE 8-Fu

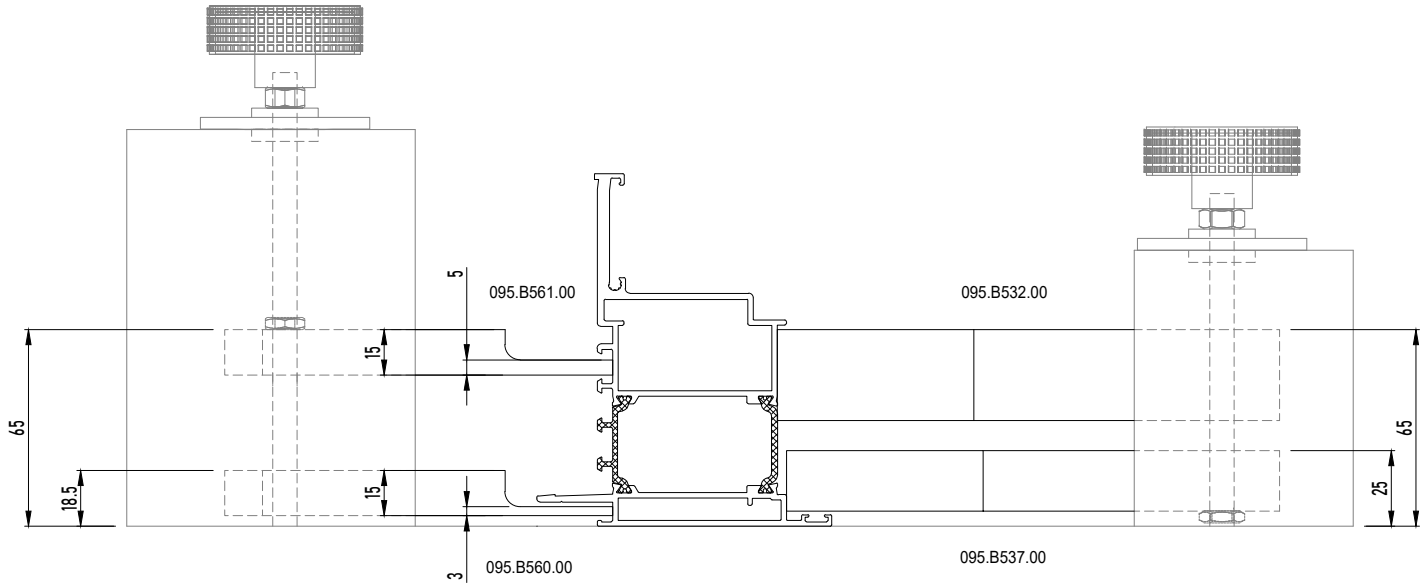

BIJKOMENDE INFO VOORBEREIDING/VERWERKING -> ZIE 'VERWERKINGSVOORSCHRIFTEN' !
INFO COMPLEMENTAIRE PREPARATION/USINAGE -> VOIR 'PRESCRIPTIONS DE MISE EN OEUVRE' !
ADDITIONAL INFO PREPARATION/PROCESSING -> SEE 'PROCESSING DATA' !
ZUSAETZLICHE INFO VORBEREITUNG/VERARBEITUNG -> SIEHE 'VERARBEITUNGSVORSCHRIFTEN' !

BIJKOMENDE INFO VOORBEREIDING/VERWERKING -> ZIE 'VERWERKINGSVOORSCHRIFTEN' !
INFO COMPLEMENTAIRE PREPARATION/USINAGE -> VOIR 'PRESCRIPTIONS DE MISE EN OEUVRE' !
ADDITIONAL INFO PREPARATION/PROCESSING -> SEE 'PROCESSING DATA' !
ZUSAETZLICHE INFO VORBEREITUNG/VERARBEITUNG -> SIEHE 'VERARBEITUNGSVORSCHRIFTEN' !

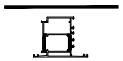

408.1314.XX
408.1316.XX
408.1334.XX
408.0214.XX
408.0224.XX
408.0226.XX



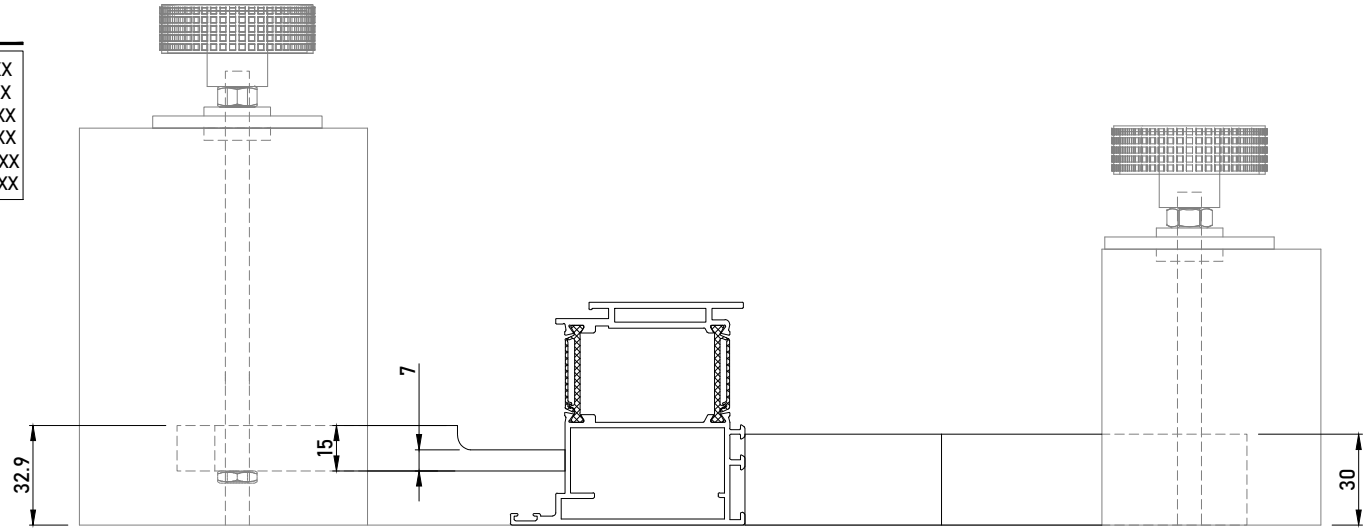

095.B562.00

095.B532.00

BIJKOMENDE INFO VOORBEREIDING/VERWERKING -> ZIE 'VERWERKINGSVOORSCHRIFTEN' !
INFO COMPLEMENTAIRE PREPARATION/USINAGE -> VOIR 'PRESCRIPTIONS DE MISE EN OEUVRE' !
ADDITIONAL INFO PREPARATION/PROCESSING -> SEE 'PROCESSING DATA' !
ZUSAETZLICHE INFO VORBEREITUNG/VERARBEITUNG -> SIEHE 'VERARBEITUNGSVORSCHRIFTEN' !

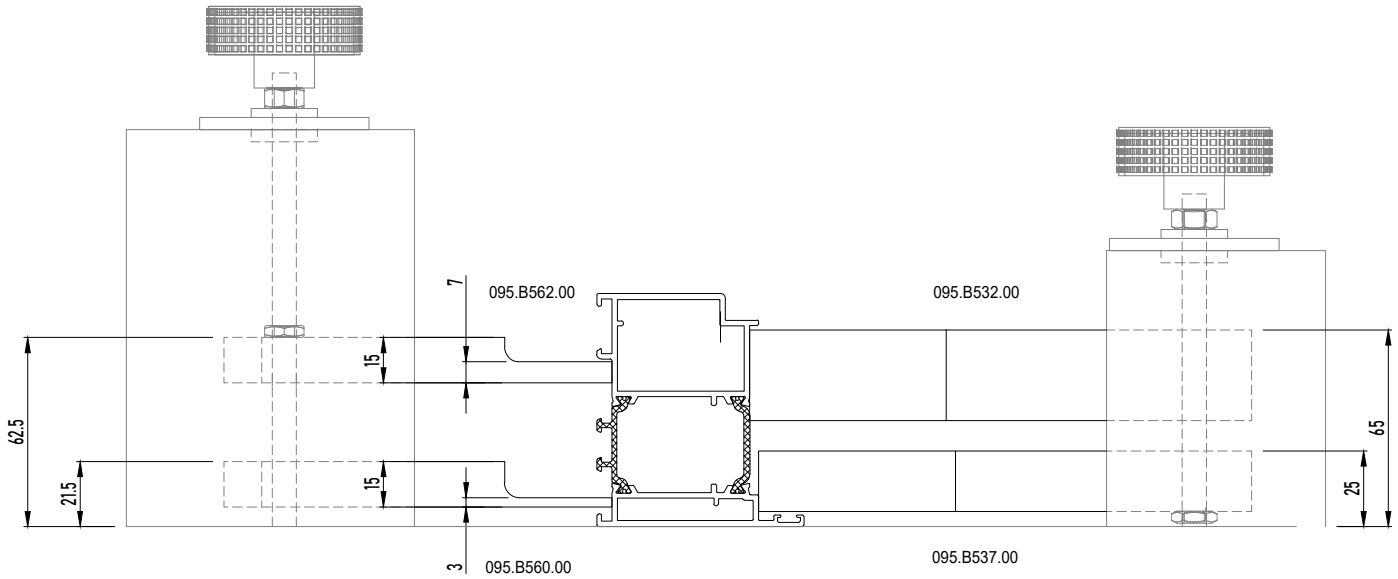

BIJKOMENDE INFO VOORBEREIDING/VERWERKING -> ZIE 'VERWERKINGSVOORSCHRIFTEN' !
INFO COMPLEMENTAIRE PREPARATION/USINAGE -> VOIR 'PRESCRIPTIONS DE MISE EN OEUVRE' !
ADDITIONAL INFO PREPARATION/PROCESSING -> SEE 'PROCESSING DATA' !
ZUSAETZLICHE INFO VORBEREITUNG/VERARBEITUNG -> SIEHE 'VERARBEITUNGSVORSCHRIFTEN' !

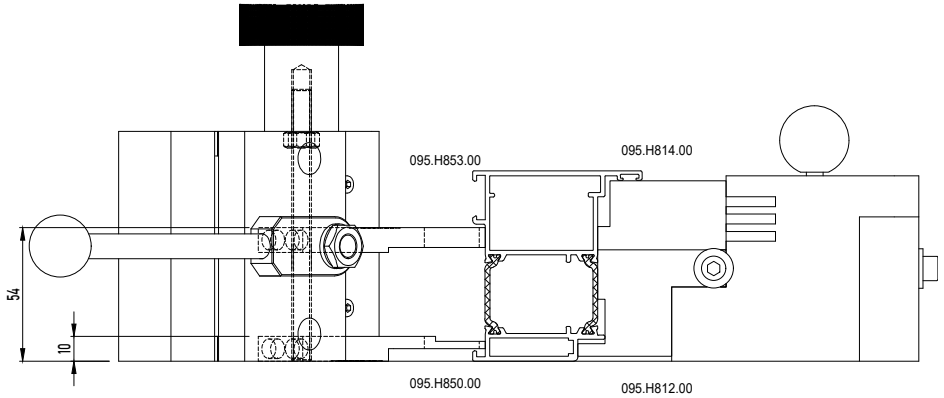

BIJKOMENDE INFO VOORBEREIDING/VERWERKING -> ZIE 'VERWERKINGSVOORSCHRIFTEN' !
INFO COMPLEMENTAIRE PREPARATION/USINAGE -> VOIR 'PRESCRIPTIONS DE MISE EN OEUVRE' !
ADDITIONAL INFO PREPARATION/PROCESSING -> SEE 'PROCESSING DATA' !
ZUSAETZLICHE INFO VORBEREITUNG/VERARBEITUNG -> SIEHE 'VERARBEITUNGSVORSCHRIFTEN' !

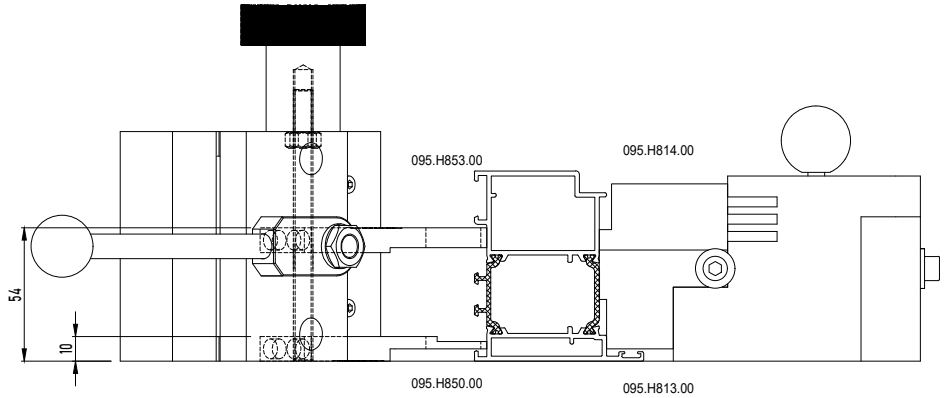

BIJKOMENDE INFO VOORBEREIDING/VERWERKING -> ZIE 'VERWERKINGSVOORSCHRIFTEN' !
INFO COMPLEMENTAIRE PREPARATION/USINAGE -> VOIR 'PRESCRIPTIONS DE MISE EN OEUVRE' !
ADDITIONAL INFO PREPARATION/PROCESSING -> SEE 'PROCESSING DATA' !
ZUSAETZLICHE INFO VORBEREITUNG/VERARBEITUNG -> SIEHE 'VERARBEITUNGSVORSCHRIFTEN' !

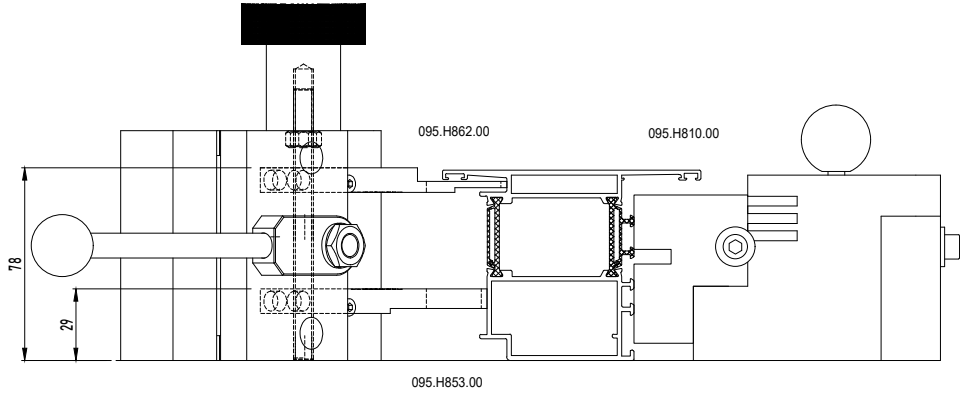

CORNER CRIMP

CRIMPING MACHINE 095.H800.00

MASTERLINE 8-Fu

BIJKOMENDE INFO VOORBEREIDING/VERWERKING -> ZIE 'VERWERKINGSVOORSCHRIFTEN' !
INFO COMPLEMENTAIRE PREPARATION/USINAGE -> VOIR 'PRESCRIPTIONS DE MISE EN OEUVRE' !
ADDITIONAL INFO PREPARATION/PROCESSING -> SEE 'PROCESSING DATA' !
ZUSAETZLICHE INFO VORBEREITUNG/VERARBEITUNG -> SIEHE 'VERARBEITUNGSVORSCHRIFTEN' !

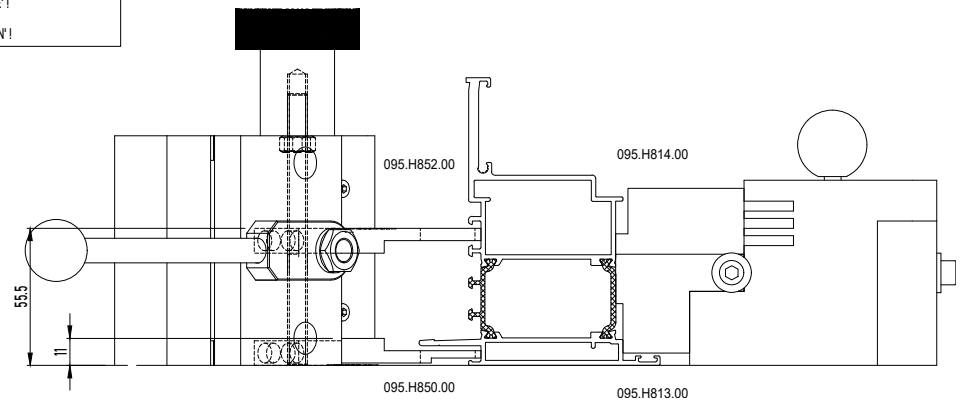

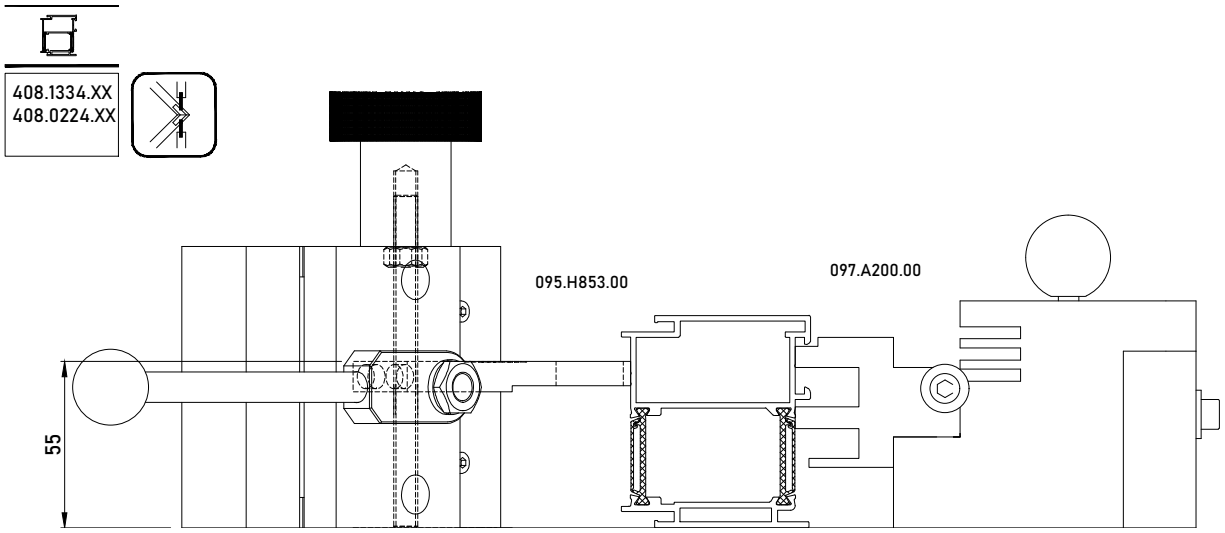
408.1334.XX
408.0224.XX
095.H853.00
097.A200.00
55

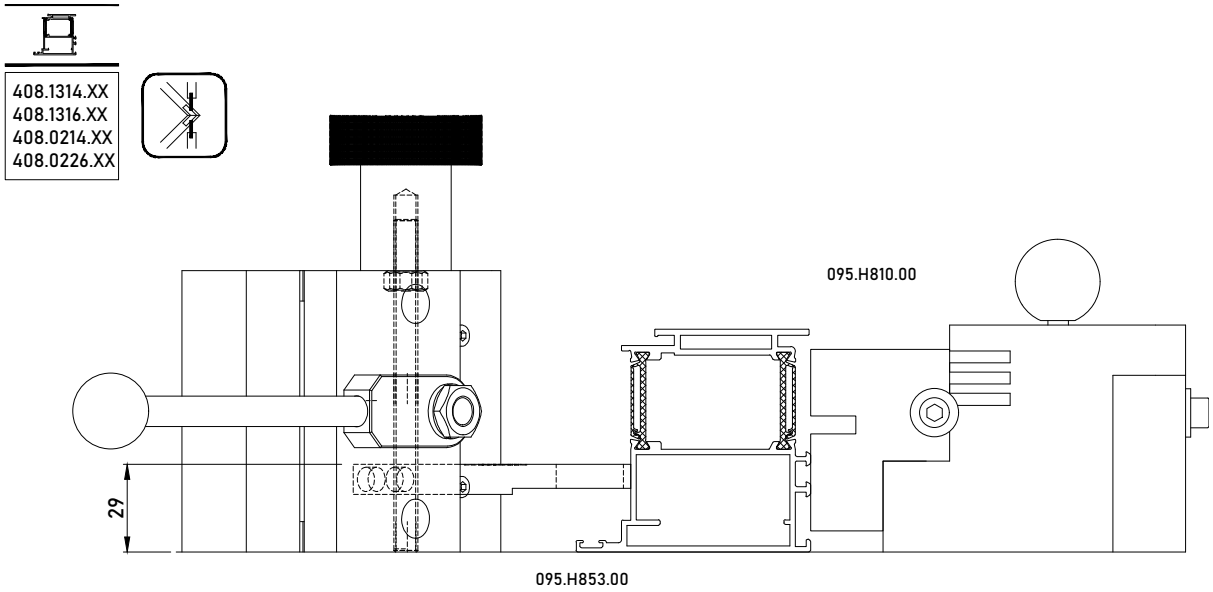
408.1314.XX
408.1316.XX
408.0214.XX
408.0226.XX
095.H810.00
29
095.H853.00

CONNECTING BRACKET

CRIMPING MACHINE 095.B500.00 | 095.B574.00, 095.B532.00, 095.B562.00

MASTERLINE 8-Fu

BIJKOMENDE INFO VOORBEREIDING/VERWERKING -> ZIE 'VERWERKINGSVOORSCHRIFTEN' !
INFO COMPLEMENTAIRE PREPARATION/USINAGE -> VOIR 'PRESCRIPTIONS DE MISE EN OEUVRE' !
ADDITIONAL INFO PREPARATION/PROCESSING -> SEE 'PROCESSING DATA' !
ZUSAETZLICHE INFO VORBEREITUNG/VERARBEITUNG -> SIEHE 'VERARBEITUNGSVORSCHRIFTEN' !

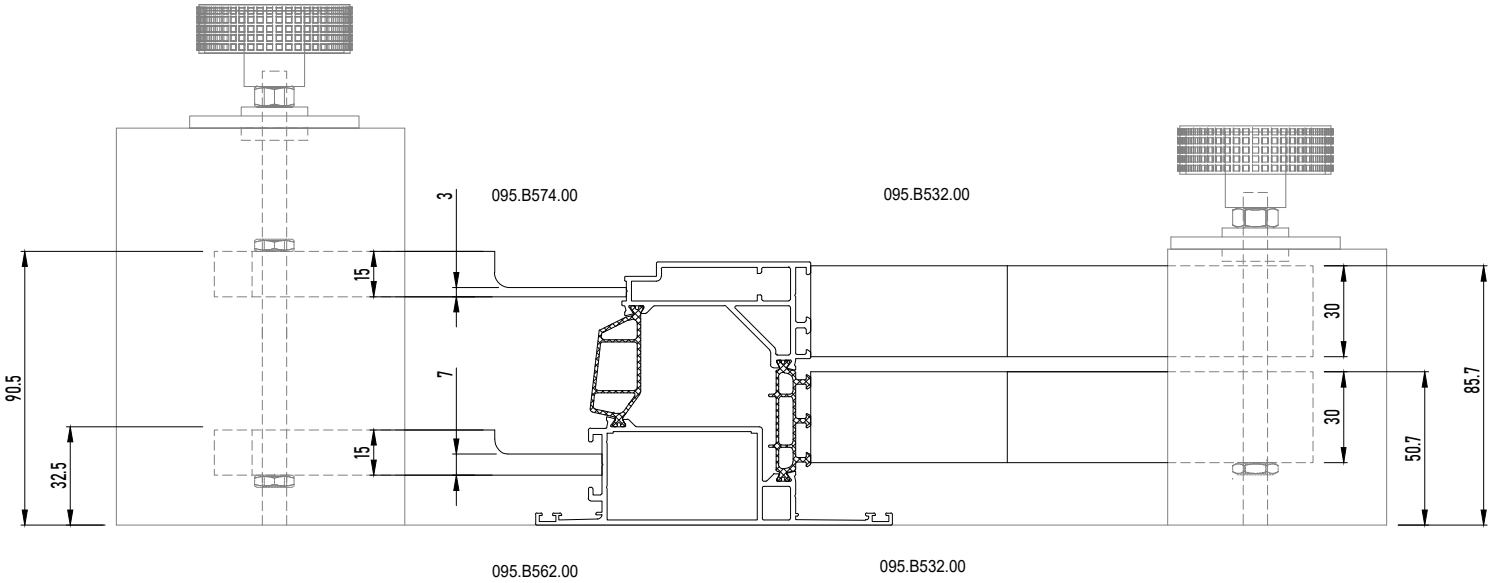

CUTTING GASKET

CENTRAL GASKET

MASTERLINE 8-Fu

				1	2	3	
OPTION 1	CORNER PIECES	EPDM	180.9697.04 + 180.9497.04	097.0217.00	086.9231.-- AND /OR 086.9232.--	084.9108.--	St
		TPE	180.8682.04 + 180.9497.04			084.9107.--	St
		EPDM	180.9698.04 + 180.9498.04			084.9108.--	HI/HI+
		TPE	180.8686.04 + 180.9498.04			084.9107.--	HI/HI+
		FOAMED EPDM	180.9885.04 + 180.9498.04			084.9108.--	HI/HI+
OPTION 2	GASKET ONLY	EPDM	180.9697.04	097.0217.00	086.9231.-- AND /OR 086.9232.--	084.9108.--	St
		TPE	180.8682.04			084.9107.--	St
		EPDM	180.9698.04			084.9108.--	HI/HI+
		TPE	180.8686.04			084.9107.--	HI/HI+
		FOAMED EPDM	180.9885.04			084.9108.--	HI/HI+
OPTION 3	FRAME	EPDM	18F.9697.04				St
		TPE	18F.8682.04				St
		EPDM	18F.9698.04				HI/HI+

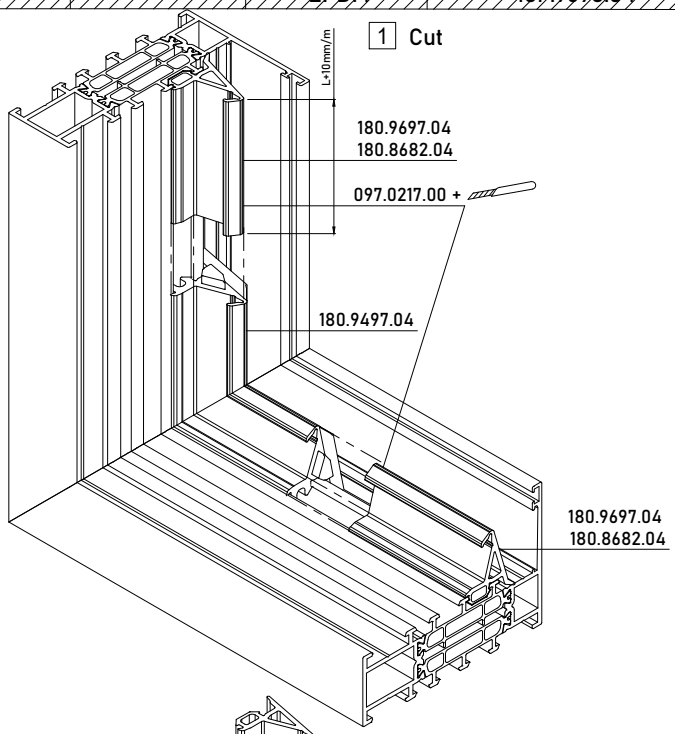

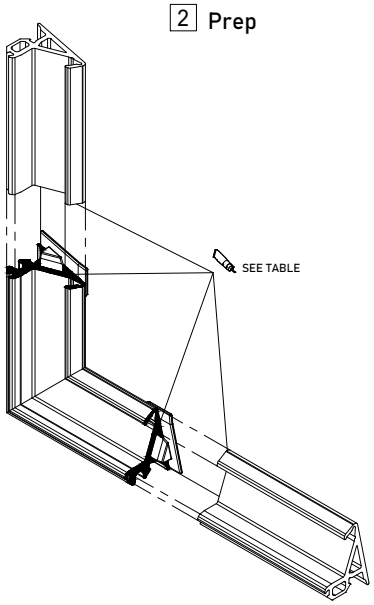

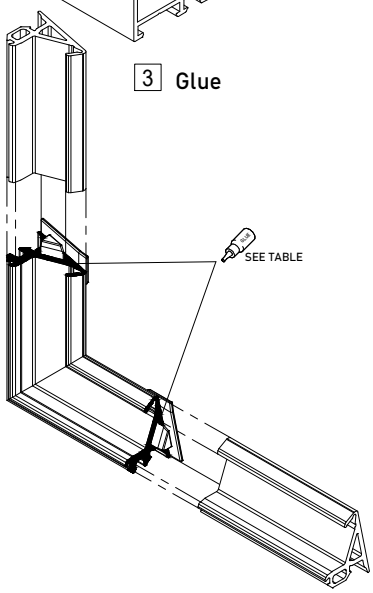

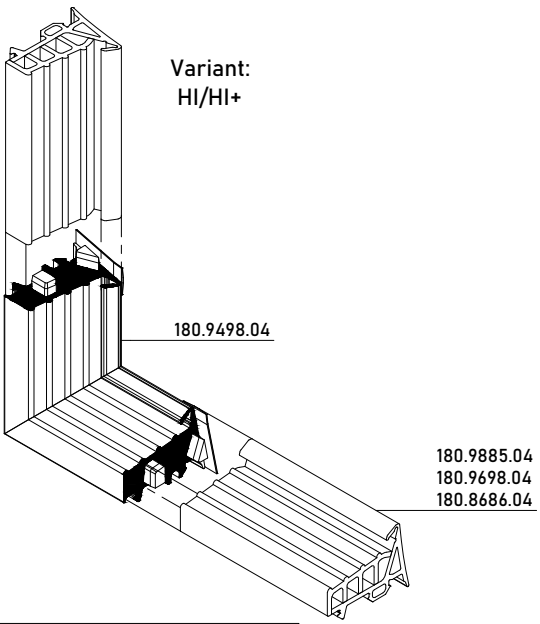

BIJKOMENDE INFO VOORBEREIDING/VERWERKING -> ZIE VERWERKINGSVOORSCHRIFTEN' !
INFO COMPLEMENTAIRE PREPARATION/USINAGE -> VOIR 'PRESCRIPTIONS DE MISE EN OEUVRE' !
ADDITIONAL INFO PREPARATION/PROCESSING -> SEE 'PROCESSING DATA' !
ZUSAETZLICHE INFO VORBEREITUNG/VERARBEITUNG -> SIEHE 'VERARBEITUNGSVORSCHRIFTEN' !

MONTAGE VOLGORDE
L'ORDRE DE MONTAGE
THE ORDER OF ASSEMBLY
MONTAGEREIHENFOLGE
1 2 3 .

CUTTING GASKET

CENTRAL GASKET

MASTERLINE 8-Fu

				1	2	3	
OPTION 1	CORNER PIECES	EPDM	180.9697.04 + 180.9497.04	097.0217.00	086.9231.-- AND /OR 086.9232.--	084.9108.--	St
		TPE	180.8682.04 + 180.9497.04			084.9107.--	St
		EPDM	180.9698.04 + 180.9498.04			084.9108.--	HI/HI+
		TPE	180.8686.04 + 180.9498.04			084.9107.--	HI/HI+
		FOAMED EPDM	180.9885.04 + 180.9498.04			084.9108.--	HI/HI+
OPTION 2	GASKET ONLY	EPDM	180.9697.04	097.0217.00	086.9231.-- AND /OR 086.9232.--	084.9108.--	St
		TPE	180.8682.04			084.9107.--	St
		EPDM	180.9698.04			084.9108.--	HI/HI+
		TPE	180.8686.04			084.9107.--	HI/HI+
		FOAMED EPDM	180.9885.04			084.9108.--	HI/HI+
OPTION 3	FRAME	EPDM	18F.9697.04				St
		TPE	18F.8682.04				St
		EPDM	18F.9698.04				HI/HI+

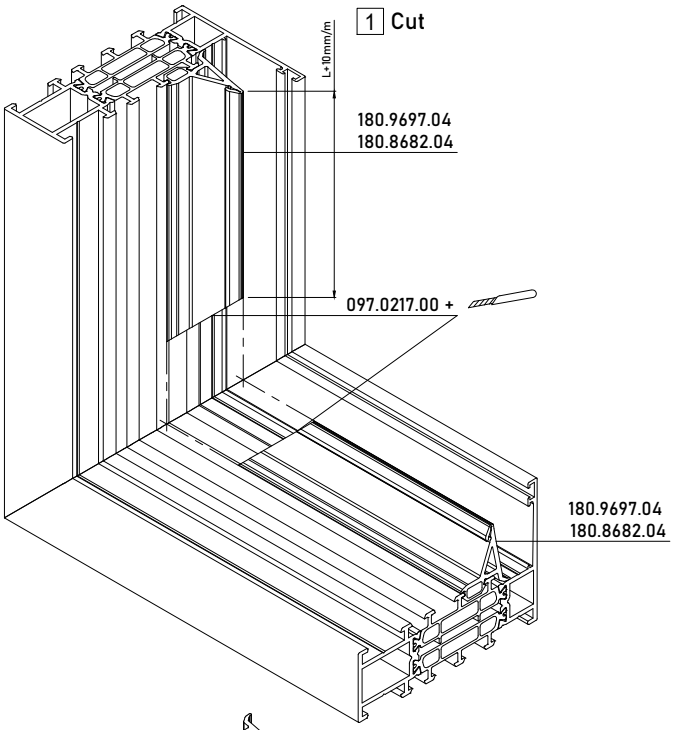

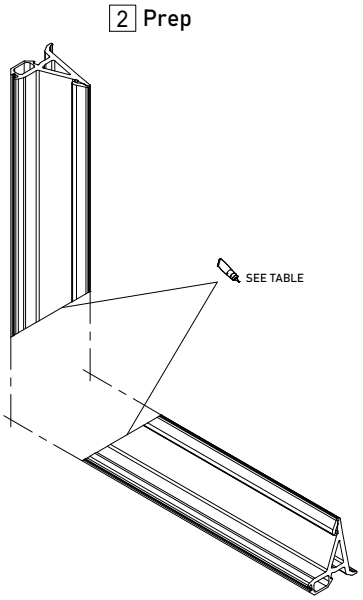

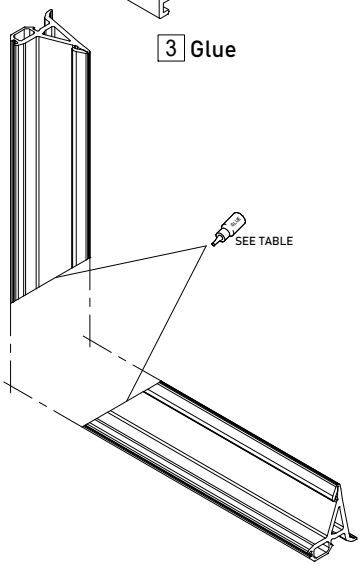

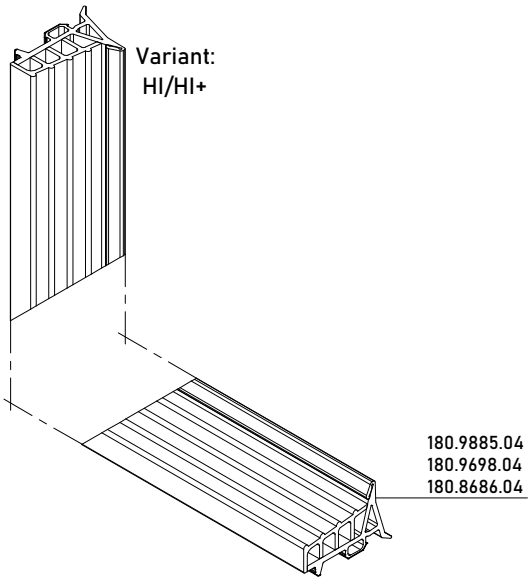

BIJKOMENDE INFO VOORBEREIDING/VERWERKING -> ZIE VERWERKINGSVOORSCHRIFTEN' !
INFO COMPLEMENTAIRE PREPARATION/USINAGE -> VOIR 'PRESCRIPTIONS DE MISE EN OEUVRE' !
ADDITIONAL INFO PREPARATION/PROCESSING -> SEE 'PROCESSING DATA' !
ZUSAETZLICHE INFO VORBEREITUNG/VERARBEITUNG -> SIEHE 'VERARBEITUNGSVORSCHRIFTEN' !

MONTAGE VOLGORDE
L 'ORDRE DE MONTAGE
THE ORDER OF ASSEMBLY
MONTAGEREIHENFOLGE
1 2 3 .

VULCANISED FRAME

CENTRAL GASKET

MASTERLINE 8-Fu

				1	2	3	
OPTION 1	CORNER PIECES	EPDM	180.9497.04 + 180.9697.04	097.0217.00	086.9231.-- AND /OR 086.9232.--	084.9108.--	St
		EPDM+TPE	180.9497.04 + 180.8682.04			084.9107.--	St
		EPDM	180.9498.04 + 180.9698.04			084.9108.--	HI/HI+
		EPDM+TPE	180.9498.04 + 180.8686.04			084.9107.--	HI/HI+
OPTION 2	GASKET ONLY	EPDM	180.9697.04	097.0217.00	086.9231.-- AND /OR 086.9232.--	084.9108.--	St
		TPE	180.8682.04			084.9107.--	St
		EPDM	180.9698.04			084.9108.--	HI/HI+
		TPE	180.8686.04			084.9107.--	HI/HI+
		FOAMED EPDM	180.9885.04			084.9108.--	HI/HI+
OPTION 3	FRAME	EPDM	18F.9697.04				St
		TPE	18F.8682.04				St
		EPDM	18F.9698.04				HI/HI+

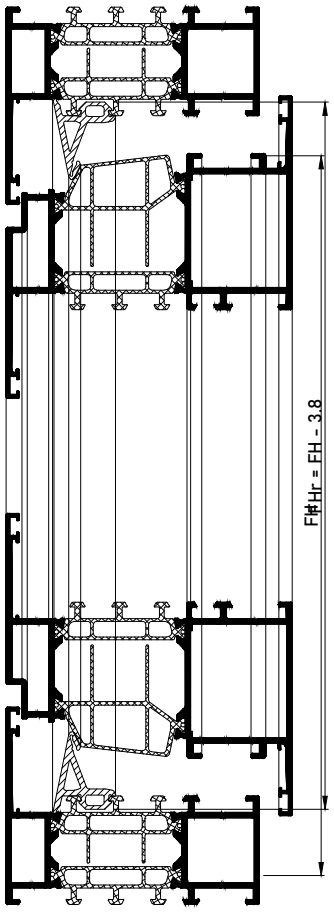

GEVULCANISEERDE KADER
CADRE VULCANISE
VULCANISED FRAME
VULKANISIERTE BLENDRAHMEN

STANDARD

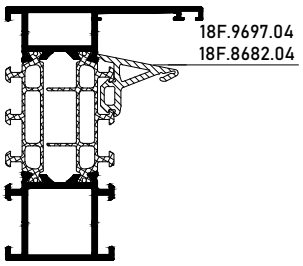

FHr = FH - 3.8
FBr = FB - 3.8

HI/HI+

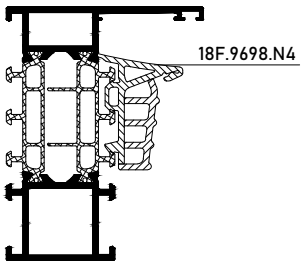

FHr = FH - 3.8
FBr = FB - 3.8

Gevulcaniseerde kader middendichting
Cadre vulcanisé joint central
Vulcanised frame central gasket
Vulkanisierter Rahmen Mitteldichtung

Enkel op bestelling!
Seulement sur commande!
Only special ordering!
Nur auf Bestellung!

TE BESTELLEN AFMETINGEN : FHr & FBr
DIMENSIONS DE COMMANDE : FHr & FBr
ORDER DIMENSIONS : FHr & FBr
BESTELLUNG ABMESSUNGEN : FHr & FBr

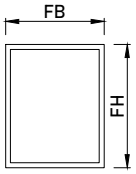

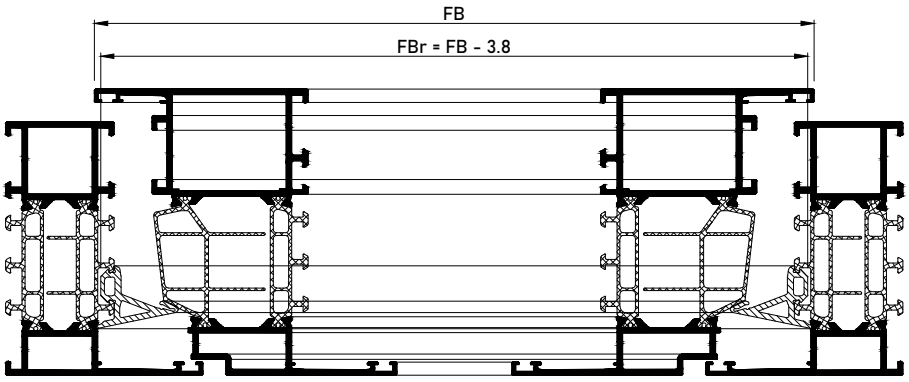

FH = VLEUGELHOOGTE / HAUTEUR D'OUVRANT / VENT HEIGHT / FLÜGELHÖHE
FB = VLEUGELBREEDTE / LARGEUR D'OUVRANT / VENT WIDTH / FLÜGELBREITE

MILLING GLAZING BEAD

GLAZING METHOD

MASTERLINE 8-Fu

095.B300.00	130.3647.XX 130.3654.XX 130.3648.XX 130.3655.XX 130.3649.XX 130.3656.XX 130.3650.XX 130.3657.XX 130.3651.XX 130.3658.XX 130.3652.XX 130.3659.XX 130.3653.XX

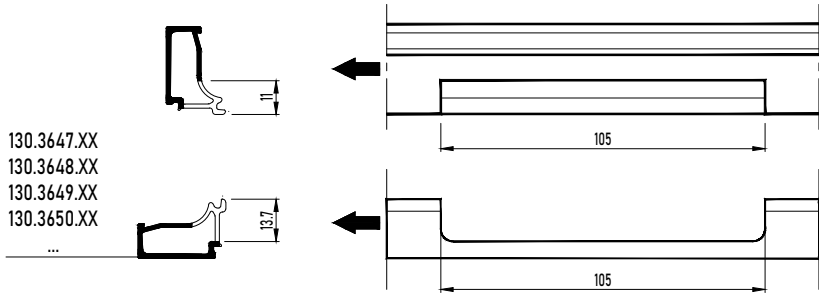

VERLIJMEN BIJKOMENDE GLASSTEUN
COLLAGE SUPPORT SUPPLEMENTAIRE
GLUING ADDITIONAL SUPPORT
VERKLEBUNG ZUSAETZLICHES GLASAUFLAGEPROFIL

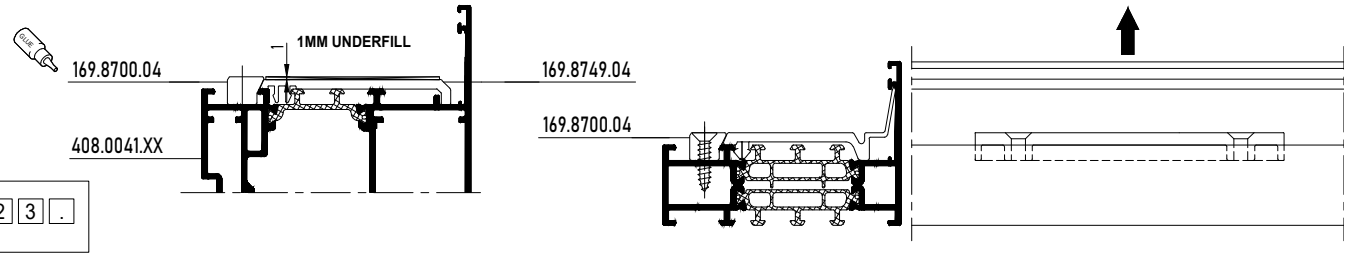

MONTAGEVOLGORDE
L 'ORDRE DE MONTAGE
THE ORDER OF ASSEMBLY
MONTAGEREIHENFOLGE
1 2 3 .

BIJKOMENDE INFO VOORBEREIDING/VERWERKING -> ZIE 'VERWERKINGSVOORSCHRIFTEN' !
INFO COMPLEMENTAIRE PREPARATION/USINAGE -> VOIR 'PRESCRIPTIONS DE MISE EN OEUVRE' !
ADDITIONAL INFO PREPARATION/PROCESSING -> SEE 'PROCESSING DATA' !
ZUSAETZLICHE INFO VORBEREITUNG/VERARBEITUNG -> SIEHE 'VERARBEITUNGSVORSCHRIFTEN' !

MILLING GLAZING BEAD

GLAZING METHOD

MASTERLINE 8-Fu

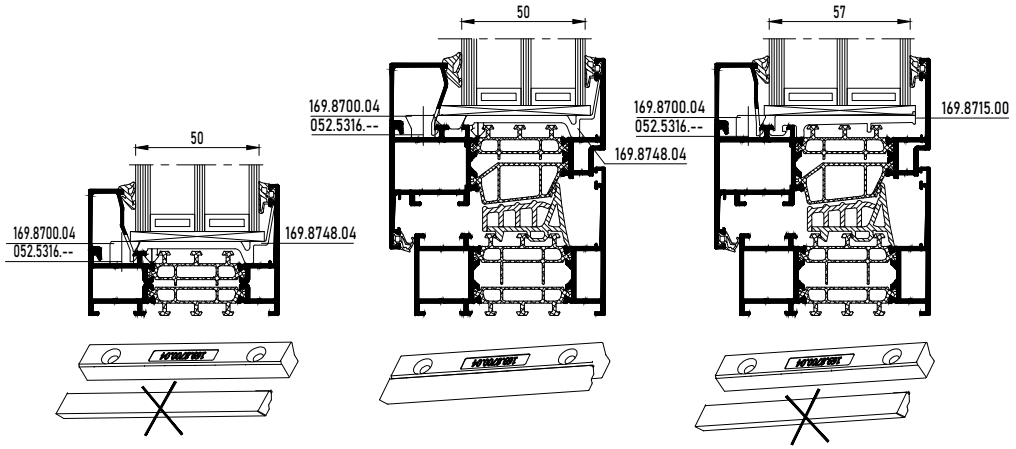

*** GLASS THICKNESS > 50MM :**
PLACE ADDITIONAL GLASS SUPPORT 169.8700.04
WHEN USING STANDARD GLASS SUPPORT 169.8748.04

**** GLASS THICKNESS > 57MM :**
PLACE ADDITIONAL GLASS SUPPORT 169.8700.04
WHEN USING HIW GLASS SUPPORT 169.8715.00

MILLING GLAZING BEAD

GLAZING METHOD | 095.C500.00, 095.C600.00, 197.H200.00

MASTERLINE 8-Fu



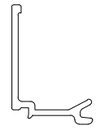

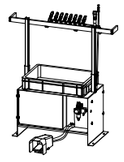

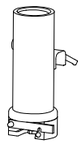

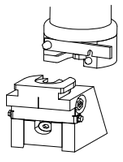

095.C500.00 095.C600.00
197.H200.00

130.3644.XX
130.3645.XX

MONTAGEVOLGORDE
L 'ORDRE DE MONTAGE
THE ORDER OF ASSEMBLY
MONTAGEREIHENFOLGE

1 2 3 .



BIJKOMENDE INFO VOORBEREIDING/VERWERKING -> ZIE 'VERWERKINGSVOORSCHRIFTEN' !
INFO COMPLEMENTAIRE PREPARATION/USINAGE -> VOIR 'PRESCRIPTIONS DE MISE EN OEUVRE' !
ADDITIONAL INFO PREPARATION/PROCESSING -> SEE 'PROCESSING DATA' !
ZUSAETZLICHE INFO VORBEREITUNG/VERARBEITUNG -> SIEHE 'VERARBEITUNGSVORSCHRIFTEN' !

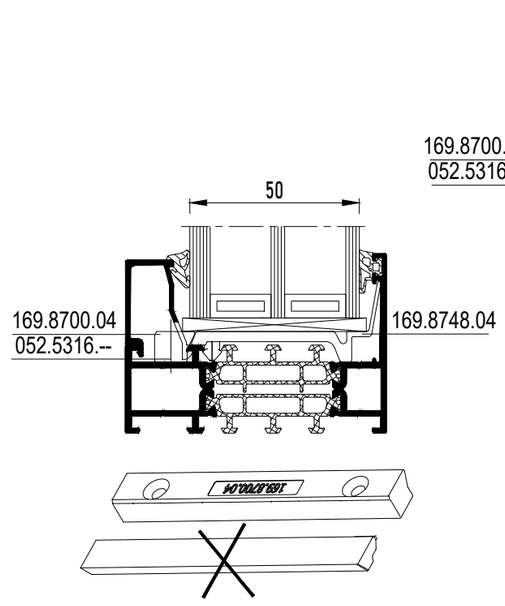

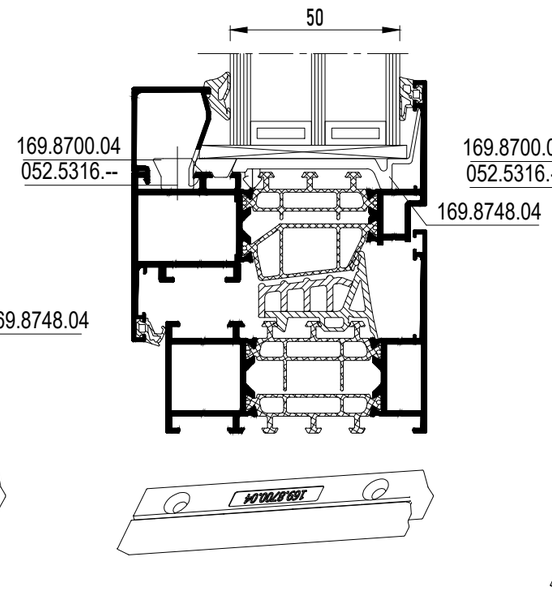

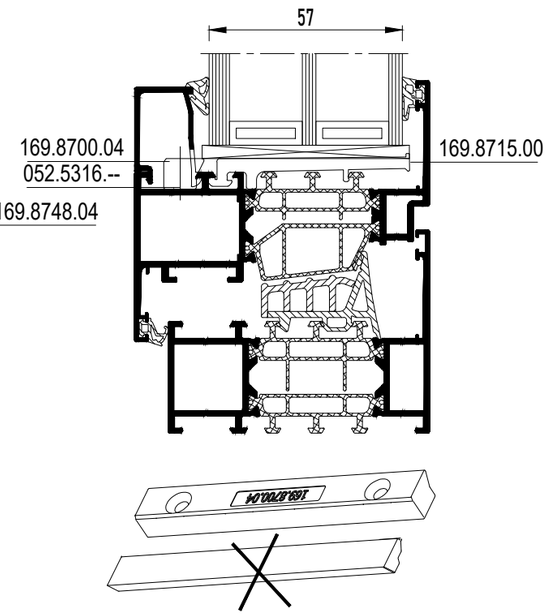

*** GLASS THICKNESS > 50MM :**
PLACE ADDITIONAL GLASS SUPPORT 169.8700.04
WHEN USING STANDARD GLASS SUPPORT 169.8748.04

**** GLASS THICKNESS > 57MM :**
PLACE ADDITIONAL GLASS SUPPORT 1
WHEN USING HIW GLASS SUPPORT 169

MILLING GLAZING BEAD

GLAZING METHOD | 095.C500.00, 095.C600.00, 197.H200.00

MASTERLINE 8-Fu

	095.C500.00 095.C600.00 197.H200.00	030.3200.XX 030.3328.XX 030.3606.XX 030.3621.XX 030.3626.XX
	-	
	-	
	-	

004.3328.XX
030.3200.XX
030.3606.XX
030.3621.XX
030.3626.XX

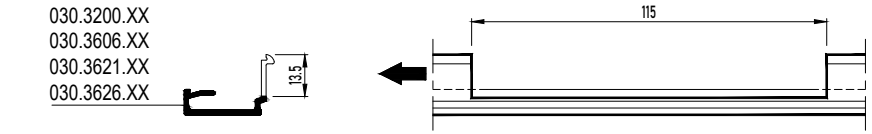

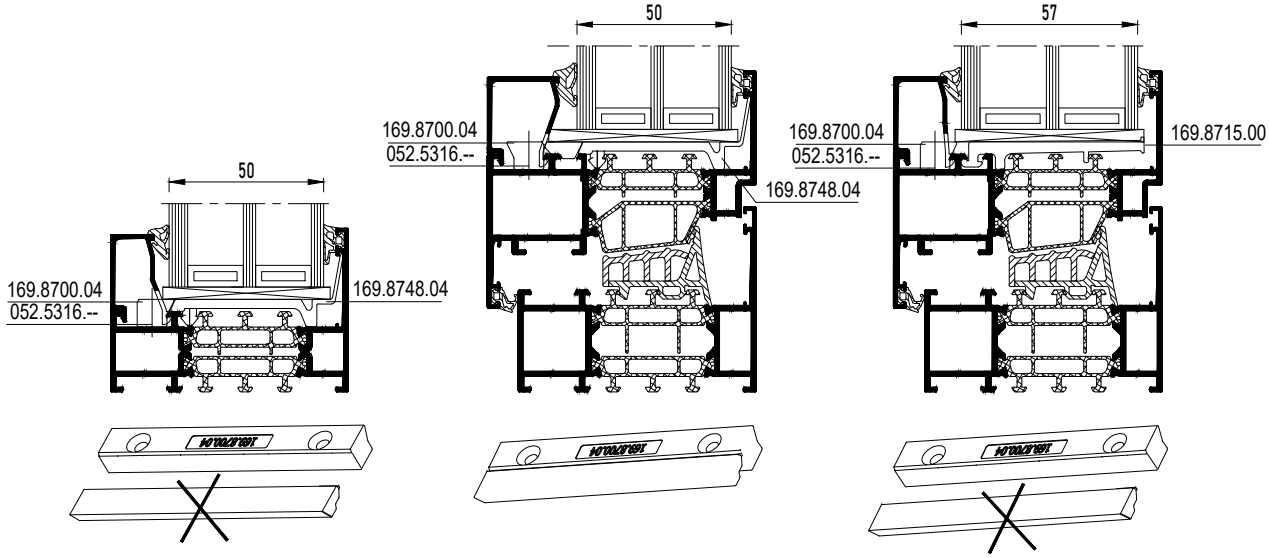

* GLASS THICKNESS > 50MM :
PLACE ADDITIONAL GLASS SUPPORT 169.8700.04
WHEN USING STANDARD GLASS SUPPORT 169.8748.04

** GLASS THICKNESS > 57MM :
PLACE ADDITIONAL GLASS SUPPORT 169.8700
WHEN USING HIW GLASS SUPPORT 169.8715.0

MILLING GLAZING BEAD

GLAZING METHOD | 095.C500.00, 095.C600.00, 197.H200.00

MASTERLINE 8-Fu

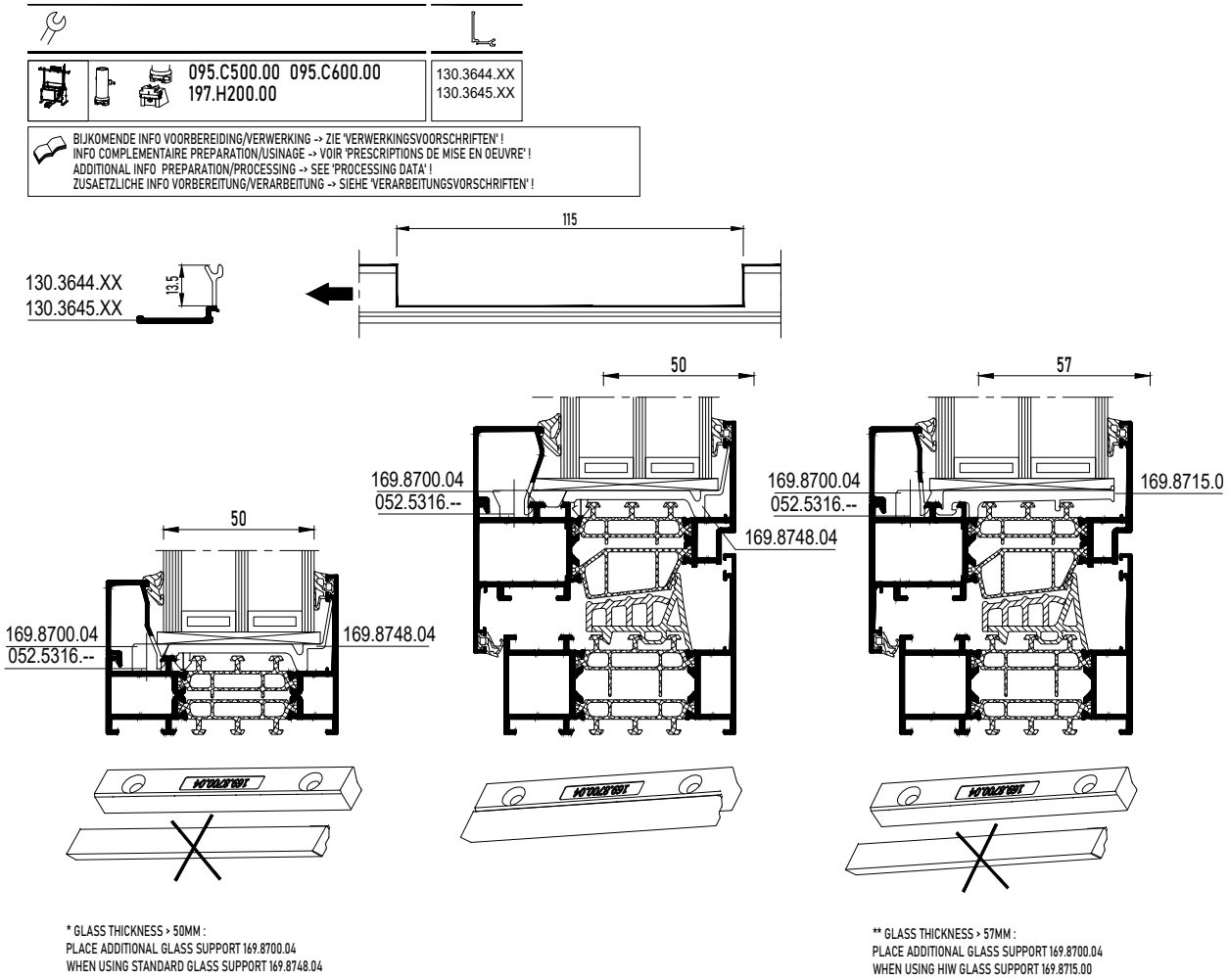

MILLING GLAZING BEAD

GLAZING METHOD - ADDITIONAL GLASS SUPPORT | 095.C500.00, 095.C600.00, 197.H200.00

MASTERLINE 8-Fu

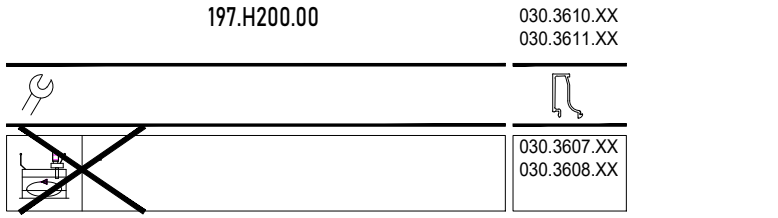

BIJKOMENDE INFO VOORBEREIDING/VERWERKING -> ZIE 'VERWERKINGSVOORSCHRIFTEN' !
INFO COMPLEMENTAIRE PREPARATION/USINAGE -> VOIR 'PRESCRIPTIONS DE MISE EN OEUVRE' !
ADDITIONAL INFO PREPARATION/PROCESSING -> SEE 'PROCESSING DATA' !
ZUSAETZLICHE INFO VORBEREITUNG/VERARBEITUNG -> SIEHE 'VERARBEITUNGSVORSCHRIFTEN' !

MILLING GLAZING BEAD

GLAZING METHOD - ADDITIONAL GLASS SUPPORT | 095.C500.00, 095.C600.00, 197.H200.00

MASTERLINE 8-Fu

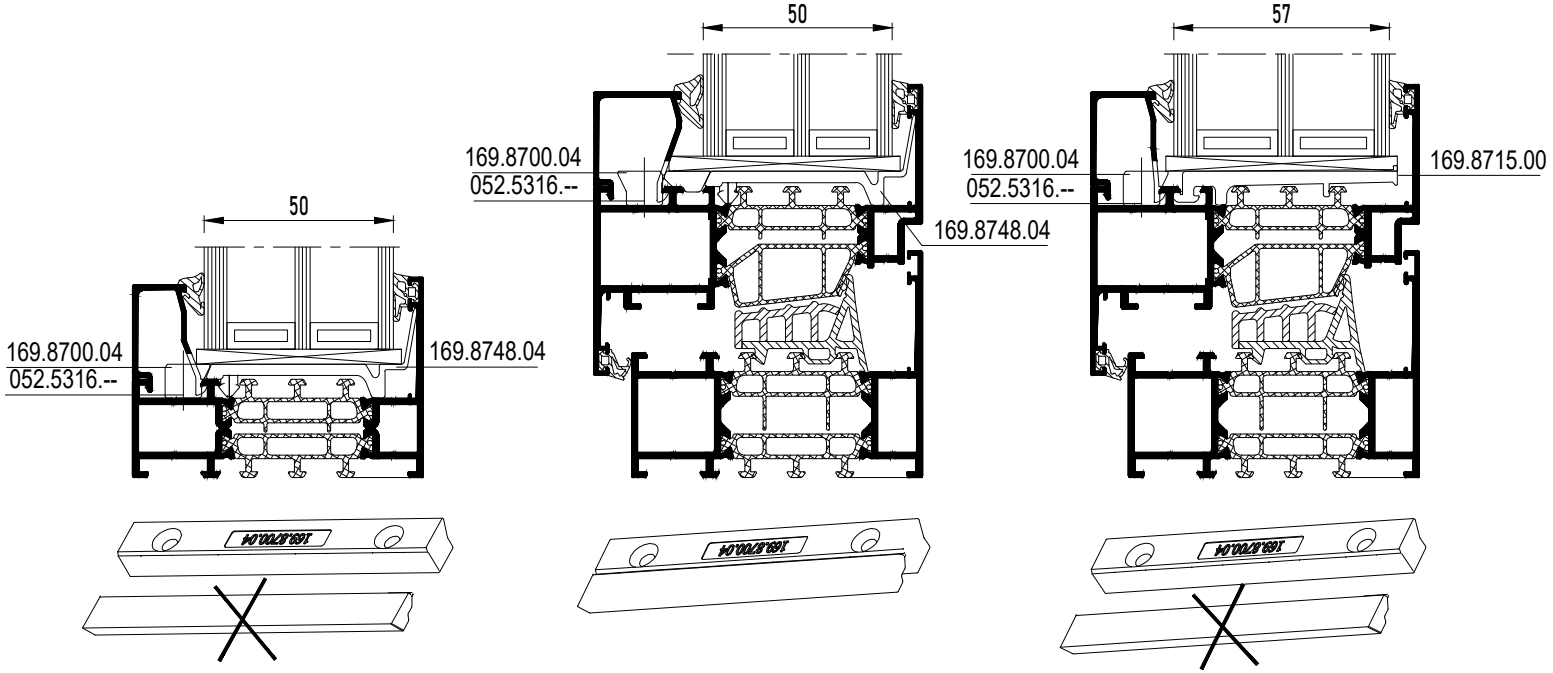

*** GLASS THICKNESS > 50MM :**
PLACE ADDITIONAL GLASS SUPPORT 169.8700.04
WHEN USING STANDARD GLASS SUPPORT 169.8748.04

**** GLASS THICKNESS > 57MM :**
PLACE ADDITIONAL GLASS SUPPORT 169.8700.04
WHEN USING HIW GLASS SUPPORT 169.8715.00

Glazing Tables
Beglazingstabellen
Tableaux de vitrage
Verglasungstabellen

Reynaers Aluminium

GLAZING METHOD MASTERLINE 8 RC2

GLAZING METHOD RC2

MASTERLINE 8-De, MASTERLINE 8-Fu, MASTERLINE 8-Re

1

Aanbrengen van dichting
Mise en place joint
Insert gasket
Montage Dichtung

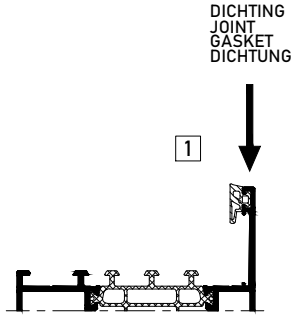

2

Aanbrengen glassteun
Mise en place support cale de vitrage
Insert glazing support
Montage Klotzbrücke

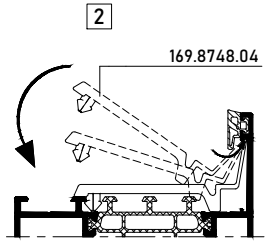

3

Glasplaatsing en opspieën
Pose de vitrage et des cales
Pos. of glass panels with spacers
Verklotzung der Scheibe

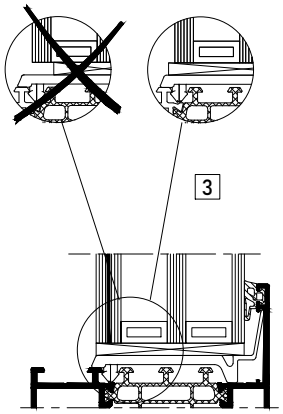

4

Afdichten van glassteunen en aanbrengen van glaslatten

Etancher les supports cale de vitrage et mettre en place les parcloses

Seal off glass supports and clip in beads

Verglasungsklötze sichern und Montage Glasleisten

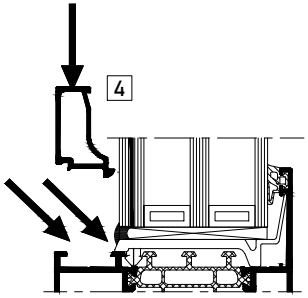

MONTAGEVOLGORDE
L 'ORDRE DE MONTAGE
THE ORDER OF ASSEMBLY
MONTAGEREIHENFOLGE
1 2 3 .

5

Aanbrengen van dichting
Mise en place joint
Insert gasket
Montage dichtung

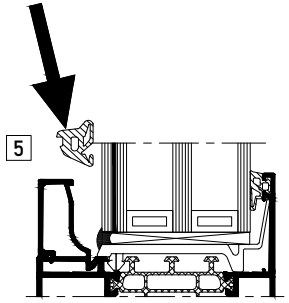

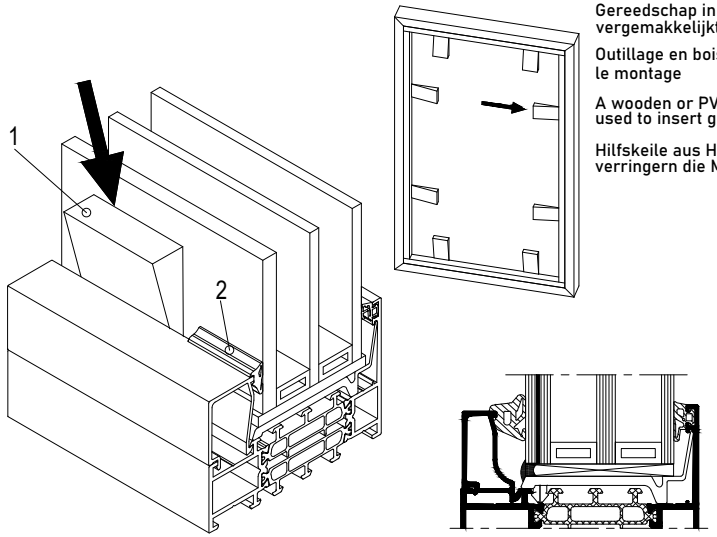

Gereedschap in hout of PVC vergemakkelijkt het plaatsen

Outillage en bois ou PVC facilite le montage

A wooden or PVC spacer can be used to insert glazing gasket

Hilfskeile aus Holz oder Kunststoff verringern die Montagezeiten

Production Steps
Productiestappen
Étapes de production
Verarbeitungs-Zeichnungen

Reynaers Aluminium

ASSEMBLY SUPPORT PROFILE RC2

MONTAGE SUPPORT PROFILE WINDOW BURGULAR PROOF RC2

MASTERLINE 8-Fu

1

WI

Fu

Re

De

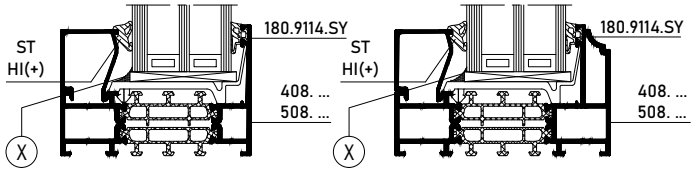

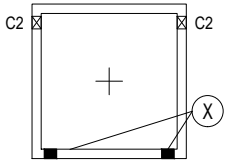

C1 = 1 x 169.8748.04 (GMAX<800KG)
C1 = 2 x 169.8748.04 (GMAX<1200KG)

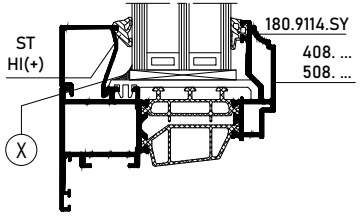

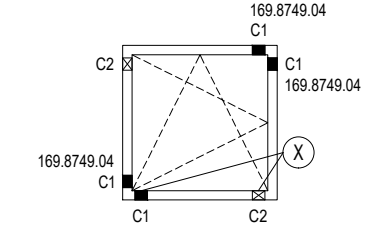

169.8749.04 (<200 kg*)

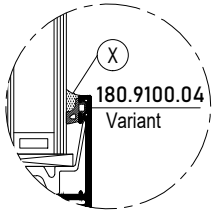

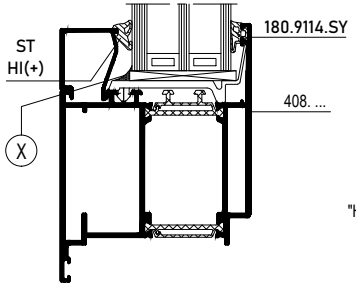

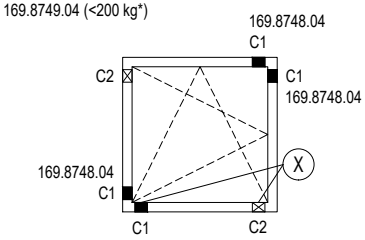

169.8748.04 (<200 kg*)
"HID" 169.8718.00 (<250 kg*)

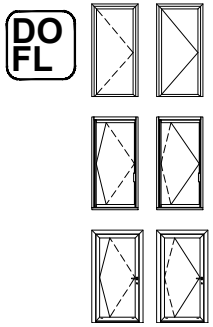

2

WI

Fu

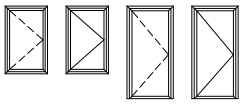

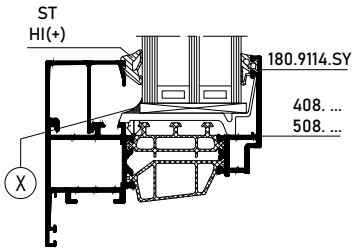

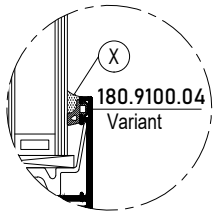

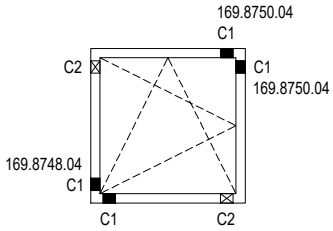

169.8748.04 (<170 kg*)
"HIW" 169.8715.00 (<300 kg*)

STANDARD GLAZING BEADS
P < 800 Pa WxH < 3200 x 3200 MM
P < 1600 Pa WxH < 1400 x 2400 MM
TUBULAR GLAZING BEADS
P < 2000 Pa WxH < 3200 x 3200 MM

BEGLAZINGSMETHODE
METHODE DE VITRAGE
GLAZING METHOD
VERGLASUNGSWEISE

ASSEMBLY SUPPORT PROFILE RC2

MONTAGE SUPPORT PROFILE WINDOW BURGULAR PROOF RC2

MASTERLINE 8-Fu

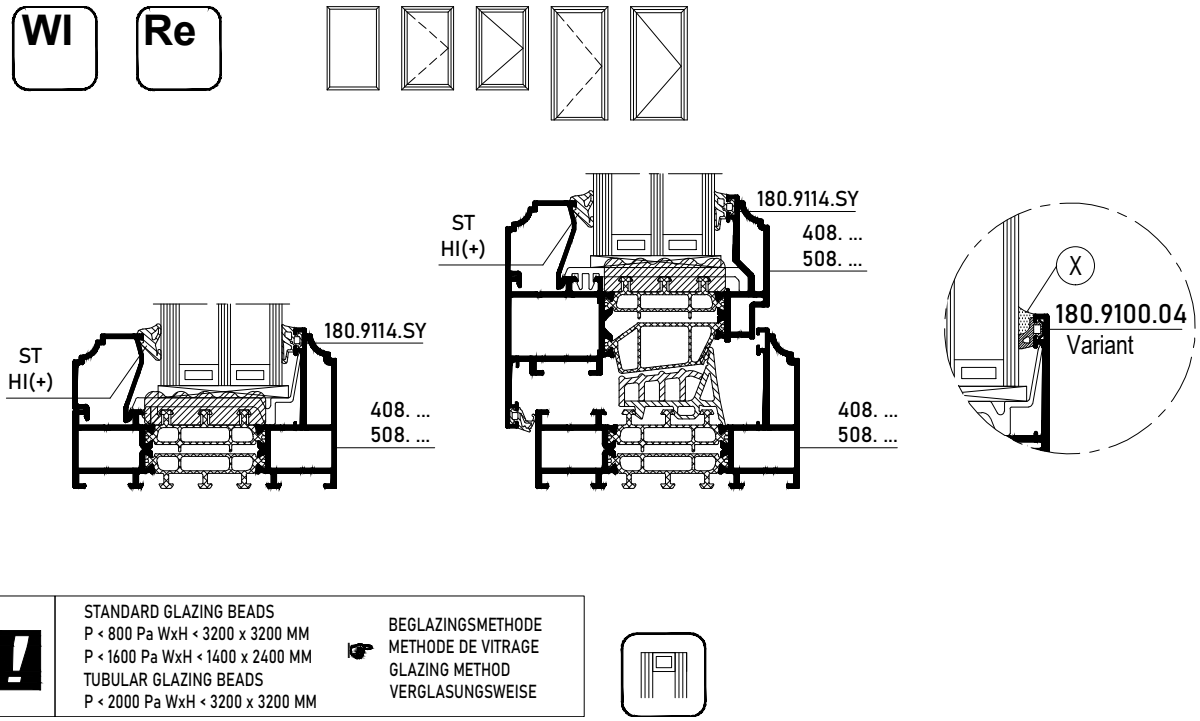

!	STANDARD GLAZING BEADS P < 800 Pa WxH < 3200 x 3200 MM P < 1600 Pa WxH < 1400 x 2400 MM TUBULAR GLAZING BEADS P < 2000 Pa WxH < 3200 x 3200 MM	BEGLAZINGSMETHODE METHODE DE VITRAGE GLAZING METHOD VERGLASUNGSWEISE

ASSEMBLY SUPPORT PROFILE RC2

MONTAGE SUPPORT PROFILE WINDOW BURGULAR PROOF RC2

MASTERLINE 8-Fu

1

WI

Fu

Re

De

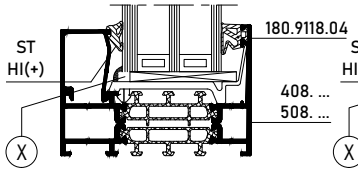

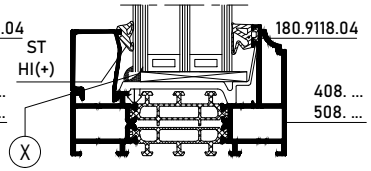

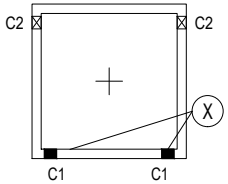

C1 = 1 x 169.8748.04 (GMAX<800KG)
C1 = 2 x 169.8748.04 (GMAX<1200KG)

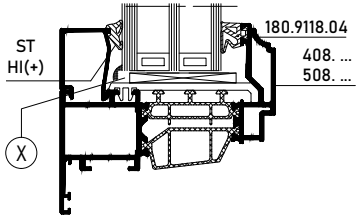

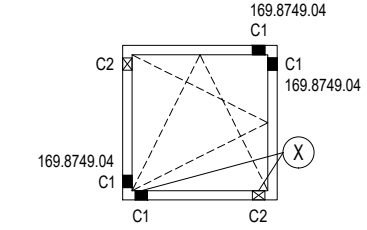

169.8749.04 (<200 kg*)

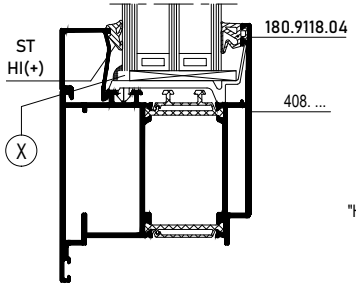

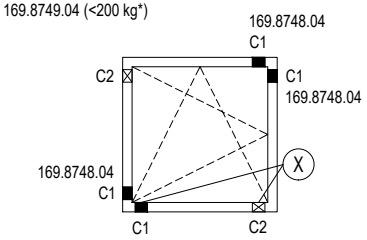

169.8748.04 (<200 kg*)
"HID" 169.8718.00 (<250 kg*)

DO
FL

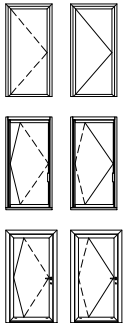

2

WI

Fu

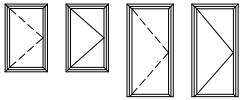

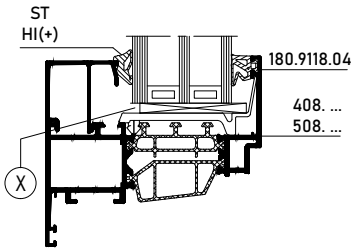

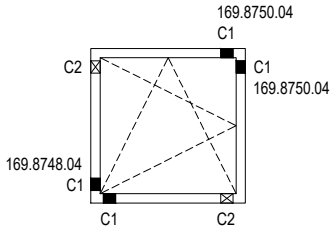

169.8748.04 (<170 kg*)
"HIW" 169.8715.00 (<300 kg*)

STANDARD GLAZING BEADS
P < 800 Pa WxH < 3200 x 3200 MM
P < 1600 Pa WxH < 1400 x 2400 MM
TUBULAR GLAZING BEADS
P < 2000 Pa WxH < 3200 x 3200 MM

BEGLAZINGSMETHODE
METHODE DE VITRAGE
GLAZING METHOD
VERGLASUNGSWEISE

ASSEMBLY SUPPORT PROFILE RC2

MONTAGE SUPPORT PROFILE WINDOW BURGULAR PROOF RC2

MASTERLINE 8-Fu

WI Fu

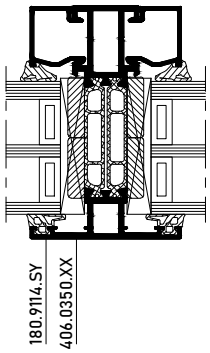

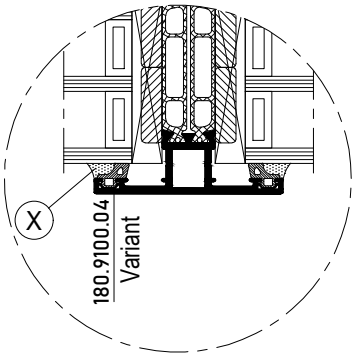

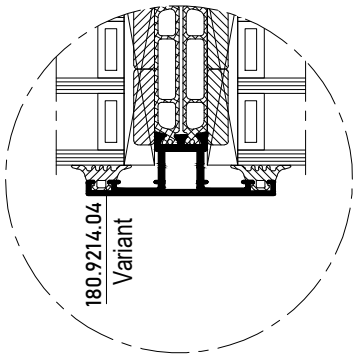

!	STANDARD GLAZING BEADS P < 800 Pa WxH < 3200 x 3200 MM P < 1600 Pa WxH < 1400 x 2400 MM TUBULAR GLAZING BEADS P < 2000 Pa WxH < 3200 x 3200 MM	BEGLAZINGSMETHODE METHODE DE VITRAGE GLAZING METHOD VERGLASUNGSWEISE

ASSEMBLY SUPPORT PROFILE RC2

MONTAGE SUPPORT PROFILE WINDOW BURGULAR PROOF RC2

MASTERLINE 8-Fu

gasket outside	glass size 1	glass size 2	gasket inside	glazing bead	
180.9114.SY	4	14	180.9368.04 080.9128.SY	030.3620.XX -	0 0
180.9114.SY	6	16	180.9366.04 080.9127.SY	030.3620.XX -	0 0
180.9114.SY	8	18	180.9372.04 080.9125.SY	030.3620.XX -	0 0
180.9114.SY	10	20	180.9366.04 080.9126.SY	030.3623.XX -	0 0
180.9114.SY	12	22	180.9366.04 080.9127.SY	030.3622.XX -	0 0
180.9114.SY	14	24	180.9372.04 080.9125.SY	030.3622.XX -	0 0
180.9114.SY	16	26	180.9366.04 080.9126.SY	030.3619.XX 130.3659.XX	0 3
180.9114.SY	18	28	180.9366.04 080.9127.SY	030.3618.XX 130.3658.XX	0 3
180.9114.SY	20	30	180.9372.04 080.9125.SY	030.3618.XX 130.3658.XX	0 3
180.9114.SY	22	32	180.9366.04 080.9126.SY	030.3617.XX 130.3657.XX	0 3

gasket outside	glass size 1	glass size 2	gasket inside	glazing bead	
180.9114.SY	24	34	180.9366.04 080.9127.SY	030.3616.XX 130.3656.XX	0 3
180.9114.SY	26	36	180.9372.04 080.9125.SY	030.3616.XX 130.3656.XX	0 3
180.9114.SY	28	38	180.9366.04 080.9126.SY	030.3615.XX 130.3655.XX	0 3
180.9114.SY	30	40	180.9366.04 080.9127.SY	030.3614.XX 130.3654.XX	0 3
180.9114.SY	32	42	180.9372.04 080.9125.SY	030.3614.XX 130.3654.XX	0 3
180.9114.SY	34	44	180.9366.04 080.9126.SY	030.3613.XX 130.3653.XX	0 3
180.9114.SY	36	46	180.9366.04 080.9127.SY	030.3612.XX 130.3652.XX	0 3
180.9114.SY	38	48	180.9372.04 080.9125.SY	030.3612.XX 130.3652.XX	0 3
180.9114.SY	40	50	180.9366.04 080.9126.SY	030.3611.XX 130.3651.XX	0 3
180.9114.SY	42	52	180.9366.04 080.9127.SY	030.3610.XX 130.3650.XX	0 3

gasket outside	glass size 1	glass size 2	gasket inside	glazing bead	
180.9114.SY	44	54	180.9372.04 080.9125.SY	030.3610.XX 130.3650.XX	0 3
180.9114.SY	46	56	180.9366.04 080.9126.SY	030.3609.XX 130.3649.XX	0 3
180.9114.SY	48	58	180.9366.04 080.9127.SY	030.3608.XX 130.3648.XX	0 3
180.9114.SY	50	60	180.9372.04 080.9125.SY	030.3608.XX 130.3648.XX	0 3
180.9114.SY	52	62	180.9366.04 080.9126.SY	030.3607.XX 130.3647.XX	0 3
180.9114.SY	54	64	180.9366.04 080.9127.SY	030.3606.XX 130.3646.XX	0 2
180.9114.SY	56	66	180.9372.04 080.9125.SY	030.3606.XX 130.3646.XX	0 2
180.9114.SY	58	68	180.9366.04 080.9126.SY	- 130.3645.XX	0 2
180.9114.SY	60	70	180.9366.04 080.9127.SY	- 130.3644.XX	0 2
180.9114.SY	62	72	180.9372.04 080.9125.SY	- 130.3644.XX	0 2

(1) FROM GLASS THICKNESS > 50MM :
PLACE ADDITIONAL GLASS SUPPORT 169.8700.04 WHEN USING STANDARD GLASS SUPPORT 169.8748.04

(2) FROM GLASS THICKNESS > 50MM :
PLACE ADDITIONAL GLASS SUPPORT 169.8700.04 WHEN USING STANDARD GLASS SUPPORT 169.8749.04

FROM GLASS THICKNESS > 45MM :
PLACE ADDITIONAL GLASS SUPPORT 169.8700.04 WHEN USING HID GLASS SUPPORT 169.8718.00

FROM GLASS THICKNESS > 55MM :
PLACE ADDITIONAL GLASS SUPPORT 169.8700.04 WHEN USING HIW GLASS SUPPORT 169.8715.00

GLAZING METHOD

ASSEMBLY SUPPORT PROFILE RC2

MONTAGE SUPPORT PROFILE WINDOW BURGULAR PROOF RC2

MASTERLINE 8-Fu

glass outside	glass size	HI/HI+ gasket inside	glazing bead
180.9114.SY	28	080.9128.SY	130.0206.XX
180.9114.SY	30	080.9126.SY	130.0206.XX
180.9114.SY	32	080.9125.SY	130.0206.XX
180.9114.SY	36	080.9130.SY	130.0203.XX
180.9114.SY	38	080.9128.SY	130.0203.XX
180.9114.SY	40	080.9126.SY	130.0203.XX
180.9114.SY	42	080.9124.SY	130.0203.XX

glass outside	glass size	HI/HI+ gasket inside	glazing bead
180.9114.SY	46	080.9128.SY	130.0200.XX
180.9114.SY	48	080.9126.SY	130.0200.XX
180.9114.SY	50	080.9125.SY	130.0200.XX

ASSEMBLY SUPPORT PROFILE RC2

MONTAGE SUPPORT PROFILE WINDOW BURGULAR PROOF RC2

MASTERLINE 8-Fu

gasket outside	glass size 1	glass size 2	gasket inside	glazing bead	
180.9118.04	4	14	180.9372.04 080.9125.SY	030.3620.XX -	
180.9118.04	6	16	180.9365.04 080.9126.SY	030.3623.XX -	
180.9118.04	8	18	180.9366.04 080.9127.SY	030.3622.XX -	
180.9118.04	10	20	180.9372.04 080.9125.SY	030.3622.XX -	
180.9118.04	12	22	180.9365.04 080.9126.SY	030.3619.XX 130.3659.XX	3
180.9118.04	14	24	180.9366.04 080.9127.SY	030.3618.XX 130.3658.XX	3
180.9118.04	16	26	180.9372.04 080.9125.SY	030.3618.XX 130.3658.XX	3
180.9118.04	18	28	180.9365.04 080.9126.SY	030.3617.XX 130.3657.XX	3
180.9118.04	20	30	180.9366.04 080.9127.SY	030.3616.XX 130.3656.XX	3
180.9118.04	22	32	180.9372.04 080.9125.SY	030.3616.XX 130.3656.XX	3
180.9118.04	24	34	180.9365.04 080.9126.SY	030.3615.XX 130.3655.XX	3
180.9118.04	26	36	180.9366.04 080.9127.SY	030.3614.XX 130.3654.XX	3
180.9118.04	28	38	180.9372.04 080.9125.SY	030.3614.XX 130.3654.XX	3
180.9118.04	30	40	180.9365.04 080.9126.SY	030.3613.XX 130.3653.XX	3
180.9118.04	32	42	180.9366.04 080.9127.SY	030.3612.XX 130.3652.XX	3
180.9118.04	34	44	180.9372.04 080.9125.SY	030.3612.XX 130.3652.XX	3
180.9118.04	36	46	180.9365.04 080.9126.SY	030.3611.XX 130.3651.XX	3
180.9118.04	38	48	180.9366.04 080.9127.SY	030.3610.XX 130.3650.XX	3
180.9118.04	40	50	180.9372.04 080.9125.SY	030.3610.XX 130.3650.XX	3
180.9118.04	42	52	180.9365.04 080.9126.SY	030.3609.XX 130.3649.XX	3
180.9118.04	44	54	180.9366.04 080.9127.SY	030.3608.XX 130.3648.XX	3
180.9118.04	46	56	180.9372.04 080.9125.SY	030.3608.XX 130.3648.XX	3
180.9118.04	48	58	180.9365.04 080.9126.SY	030.3607.XX 130.3647.XX	3
180.9118.04	50	60	180.9366.04 080.9127.SY	030.3606.XX 130.3646.XX	2
180.9118.04	52	62	180.9372.04 080.9125.SY	030.3606.XX 130.3646.XX	2
180.9118.04	54	64	180.9365.04 080.9126.SY	- 130.3645.XX	2
180.9118.04	56	66	180.9366.04 080.9127.SY	- 130.3644.XX	2
180.9118.04	58	68	180.9372.04 080.9125.SY	- 130.3644.XX	2

(1) FROM GLASS THICKNESS > 46MM :
PLACE ADDITIONAL GLASS SUPPORT 169.8700.04 WHEN USING STANDARD GLASS SUPPORT 169.8748.04

(2) FROM GLASS THICKNESS > 46MM :
PLACE ADDITIONAL GLASS SUPPORT 169.8700.04 WHEN USING STANDARD GLASS SUPPORT 169.8748.04

FROM GLASS THICKNESS > 41MM :
PLACE ADDITIONAL GLASS SUPPORT 169.8700.04 WHEN USING HID GLASS SUPPORT 169.8718.00

FROM GLASS THICKNESS > 51MM :
PLACE ADDITIONAL GLASS SUPPORT 169.8700.04 WHEN USING HIW GLASS SUPPORT 169.8715.00

GLAZING METHOD

ASSEMBLY SUPPORT PROFILE RC2

MONTAGE SUPPORT PROFILE WINDOW BURGULAR PROOF RC2

MASTERLINE 8-Fu

gasket outside	glass size ①	glass size ②	gasket inside ST	glazing bead RC	
180.9118.04	4	14	180.9372.04 080.9125.SY	030.3620.XX -	
180.9118.04	6	16	180.9365.04 080.9126.SY	030.3623.XX -	
180.9118.04	8	18	180.9366.04 080.9127.SY	030.3622.XX -	
180.9118.04	10	20	180.9372.04 080.9125.SY	030.3622.XX -	
180.9118.04	12	22	180.9365.04 080.9126.SY	030.3619.XX 130.3659.XX	3
180.9118.04	14	24	180.9366.04 080.9127.SY	030.3618.XX 130.3658.XX	3
180.9118.04	16	26	180.9372.04 080.9125.SY	030.3618.XX 130.3658.XX	3
180.9118.04	18	28	180.9365.04 080.9126.SY	030.3617.XX 130.3657.XX	3
180.9118.04	20	30	180.9366.04 080.9127.SY	030.3616.XX 130.3656.XX	3
180.9118.04	22	32	180.9372.04 080.9125.SY	030.3616.XX 130.3656.XX	3
180.9118.04	24	34	180.9365.04 080.9126.SY	030.3615.XX 130.3655.XX	3
180.9118.04	26	36	180.9366.04 080.9127.SY	030.3614.XX 130.3654.XX	3
180.9118.04	28	38	180.9372.04 080.9125.SY	030.3614.XX 130.3654.XX	3
180.9118.04	30	40	180.9365.04 080.9126.SY	030.3613.XX 130.3653.XX	3
180.9118.04	32	42	180.9366.04 080.9127.SY	030.3612.XX 130.3652.XX	3
180.9118.04	34	44	180.9372.04 080.9125.SY	030.3612.XX 130.3652.XX	3
180.9118.04	36	46	180.9365.04 080.9126.SY	030.3611.XX 130.3651.XX	3
180.9118.04	38	48	180.9366.04 080.9127.SY	030.3610.XX 130.3650.XX	3
180.9118.04	40	50	180.9372.04 080.9125.SY	030.3610.XX 130.3650.XX	3
180.9118.04	42	52	180.9365.04 080.9126.SY	030.3609.XX 130.3649.XX	3
180.9118.04	44	54	180.9366.04 080.9127.SY	030.3608.XX 130.3648.XX	3
180.9118.04	46	56	180.9372.04 080.9125.SY	030.3608.XX 130.3648.XX	3
180.9118.04	48	58	180.9365.04 080.9126.SY	030.3607.XX 130.3647.XX	3
180.9118.04	50	60	180.9366.04 080.9127.SY	030.3606.XX 130.3646.XX	2
180.9118.04	52	62	180.9372.04 080.9125.SY	030.3606.XX 130.3646.XX	2
180.9118.04	54	64	180.9365.04 080.9126.SY	- 130.3645.XX	2
180.9118.04	56	66	180.9366.04 080.9127.SY	- 130.3644.XX	2
180.9118.04	58	68	180.9372.04 080.9125.SY	- 130.3644.XX	2

① FROM GLASS THICKNESS > 46MM :
PLACE ADDITIONAL GLASS SUPPORT 169.8700.04 WHEN USING STANDARD GLASS SUPPORT 169.8748.04

② FROM GLASS THICKNESS > 46MM :
PLACE ADDITIONAL GLASS SUPPORT 169.8700.04 WHEN USING STANDARD GLASS SUPPORT 169.8748.04

FROM GLASS THICKNESS > 41MM :
PLACE ADDITIONAL GLASS SUPPORT 169.8700.04 WHEN USING HID GLASS SUPPORT 169.8718.00

FROM GLASS THICKNESS > 51MM :
PLACE ADDITIONAL GLASS SUPPORT 169.8700.04 WHEN USING HIW GLASS SUPPORT 169.8715.00

GLAZING METHOD

ASSEMBLY SUPPORT PROFILE RC2

MONTAGE SUPPORT PROFILE WINDOW BURGULAR PROOF RC2

MASTERLINE 8-Fu

1

Aanbrengen van dichting
Mise en place joint
Insert gasket
Montage Dichtung

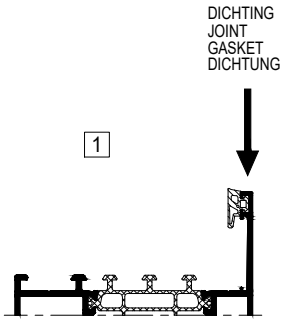

2

Aanbrengen glassteun
Mise en place support cale de vitrage
Insert glazing support
Montage Klotzbrücke

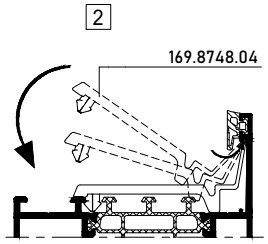

3

Glasplaatsing en opspieën
Pose de vitrage et des cales
Pos. of glass panels with spacers
Verklotzung der Scheibe

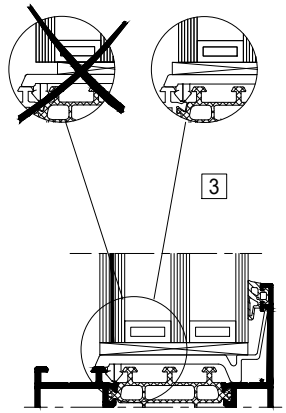

4

Afdichten van glassteunen en aanbrengen van glaslatten

Etancher les supports cale de vitrage et mettre en place les parcloses

Seal off glass supports and clip in beads

Verglasungsklötze sichern und Montage Glasleisten

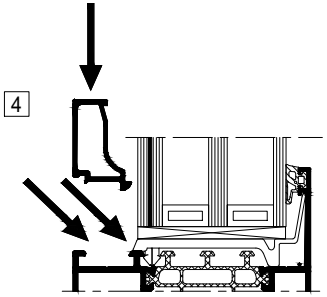

5

Aanbrengen van dichting
Mise en place joint
Insert gasket
Montage Dichtung

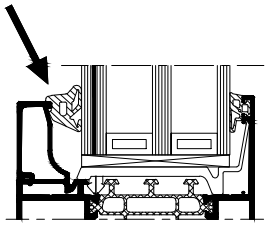

5 DICHTING
JOINT
GASKET
DICHTUNG

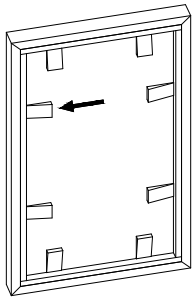

Gereedschap in hout of PVC vergemakkelijkt het plaatsen

Outillage en bois ou PVC facilite le montage

A wooden or PVC spacer can be used to insert glazing gasket

Hilfskeile aus Holz oder Kunststoff verringern die Montagezeiten

MONTAGEVOLGORDE
L 'ORDRE DE MONTAGE
THE ORDER OF ASSEMBLY
MONTAGEREIHENFOLGE
1 2 3 .

Niet mogelijk voor Renaissance en Deco - Alleen met lokale glasverlijming.
Pas possible pour la Renaissance et la Déco - Seulement avec un collage local du verre.
Not possible for Renaissance and Deco - Only with local glass bonding.
Nicht möglich für Renaissance und Deco - Nur mit lokaler Glasverklebung.

BIJKOMENDE INFO VOORBEREIDING/VERWERKING -> ZIE 'VERWERKINGSVOORSCHRIFTEN' !
INFO COMPLEMENTAIRE PREPARATION/USINAGE -> VOIR 'PRESCRIPTIONS DE MISE EN OEUVRE' !
ADDITIONAL INFO PREPARATION/PROCESSING -> SEE 'PROCESSING DATA' !
ZUSAETZLICHE INFO VORBEREITUNG/VERARBEITUNG -> SIEHE 'VERARBEITUNGSVORSCHRIFTEN' !

ASSEMBLY SUPPORT PROFILE RC3

MONTAGE FRAME PROFILE BURGLARPROOF RC3

MASTERLINE 8-Fu

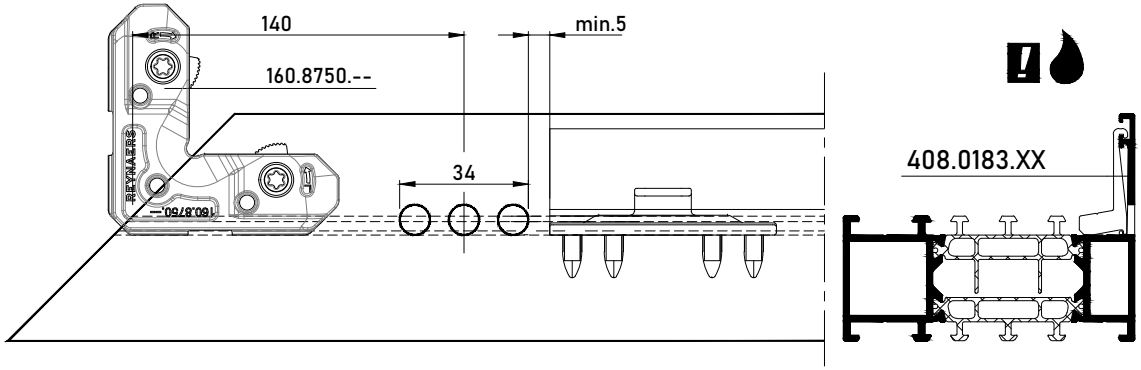

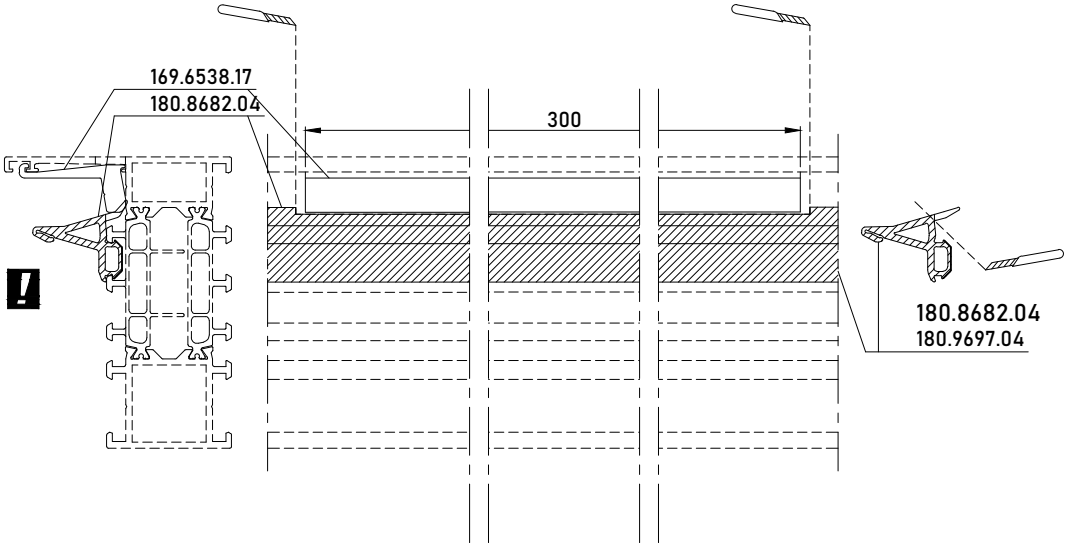

ASSEMBLY SUPPORT PROFILE RC3

MONTAGE FRAME PROFILE BURGLARPROOF RC3

MASTERLINE 8-Fu

1

Aanbrengen van dichting
Mise en place joint
Insert gasket
Montage Dichtung

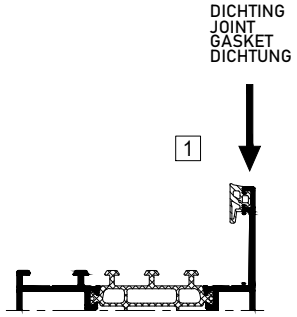

2

Aanbrengen glassteun
Mise en place support cale de vitrage
Insert glazing support
Montage Klotzbrücke

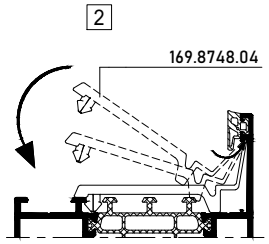

3

Glasplaatsing en opspieën
Pose de vitrage et des cales
Pos. of glass panels with spacers
Verklotzung der Scheibe

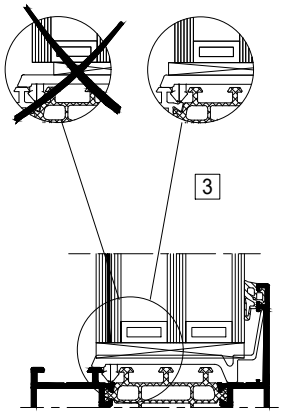

4

Afdichten van glassteunen en aanbrengen van glaslatten

Etancher les supports cale de vitrage et mettre en place les parcloses

Seal off glass supports and clip in beads

Verglasungsklötze sichern und Montage Glasleisten

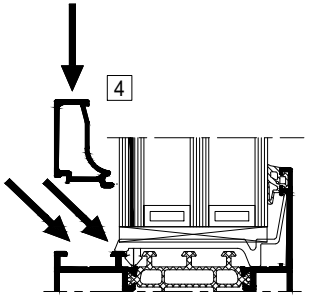

MONTAGEVOLGORDE
L 'ORDRE DE MONTAGE
THE ORDER OF ASSEMBLY
MONTAGEREIHENFOLGE
1 2 3 .

5

Aanbrengen van lijm
Application de colle
Application glue
Anbringen verkleben

NOVATIO Seal&Bond MS 50-2K
(or KENT Rotabond 2000 (084.9055
similar (084.9056.04))

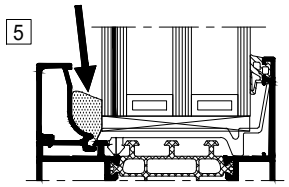

Schematisch aanzicht van verlijming
Vue schématique d'adhésif
Schematic view of adhesive
Schematische Ansicht Klebstoff

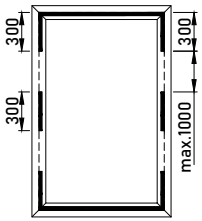

2-COMPONENTENLIJM OVEREENSTEMMEND MET DE VOORSCHRIFTEN VAN DE GLASLEVERANCIER
APPLICATION OF TWO COMPONENT GLUE CORRESPONDING TO THE REQUIREMENTS OF THE GLASS SUPPLIER
APPLICATION DE COLLE A DEUX COMPOSANTS CONFORMEMENT AUX PRESCRIPTIONS DU FOURNISSEUR DE VERRE
ANBRINGEN ZWEIKOMPONENTENKLEBER GEMASS DEN ANFORDERUNGEN DES GLAS LIEFERANTEN

6

Aanbrengen van dichting
Mise en place joint
Insert gasket
Montage Dichtung

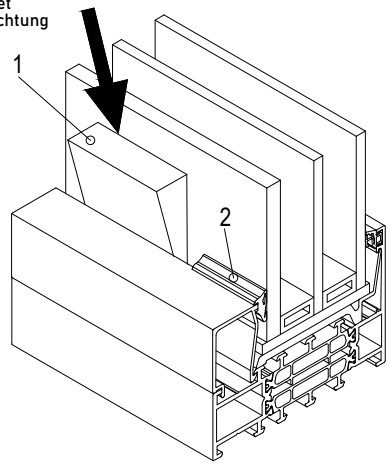

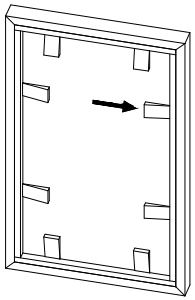

Gereedschap in hout of PVC vergemakkelijkt het plaatsen

Outillage en bois ou PVC facilite le montage

A wooden or PVC spacer can be used to insert glazing gasket

Hilfskeile aus Holz oder Kunststoff verringern die Montagezeiten

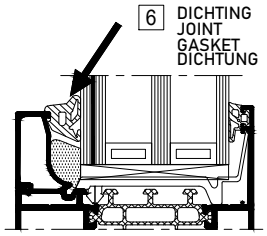

ASSEMBLY SUPPORT PROFILE RC3

MONTAGE FRAME PROFILE BURGLARPROOF RC3

MASTERLINE 8-Fu

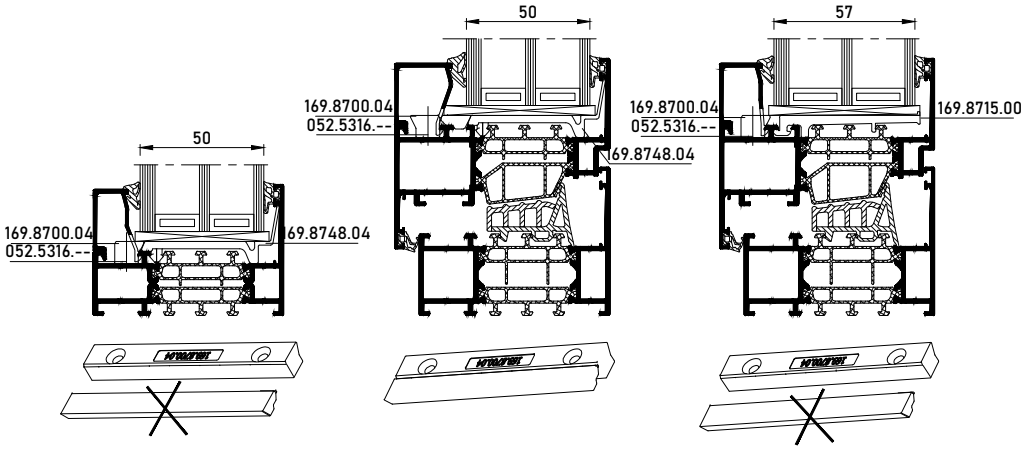

* GLASS THICKNESS > 50MM :
PLACE ADDITIONAL GLASS SUPPORT 169.8700.04
WHEN USING STANDARD GLASS SUPPORT 169.8748.04

** GLASS THICKNESS > 57MM :
PLACE ADDITIONAL GLASS SUPPORT 169.8700.04
WHEN USING HIW GLASS SUPPORT 169.8715.00

ASSEMBLY SUPPORT PROFILE RC3

MONTAGE FRAME PROFILE BURGLARPROOF RC3

MASTERLINE 8-Fu

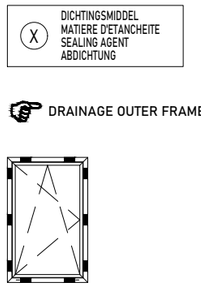

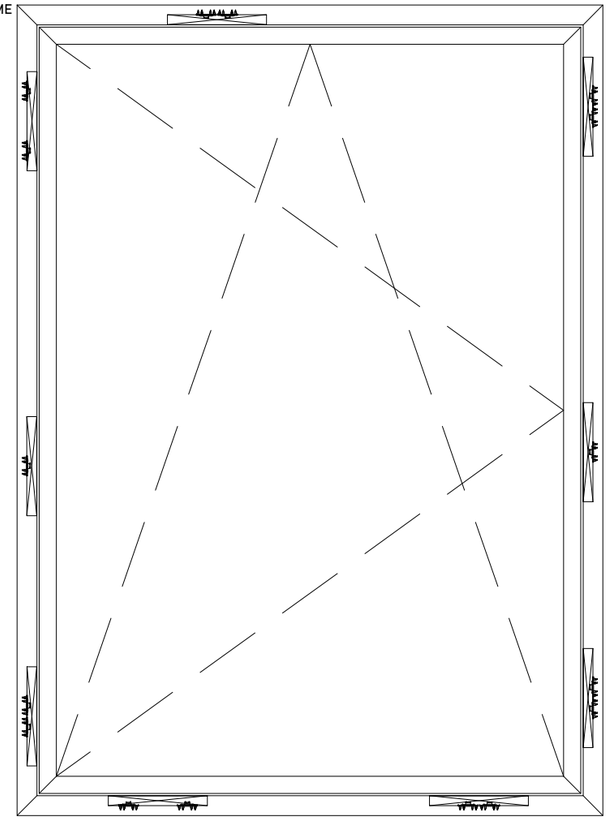

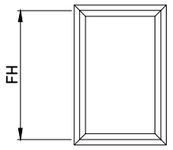

169.6568.17 (x 8) ⩽ 1250mm
169.6568.17 (x 10) >1250mm

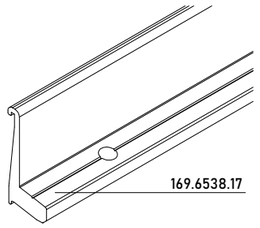

VOOR IEDER SLUITPUNT PLAATSEN
FIXER A L'HAUTEUR DE CHAQUE POINT DE FERMETURE
PLACE IN FRONT OF EACH LOCKING POINT
VOR JEDEM SCHLIESSPUNKT MONTIEREN

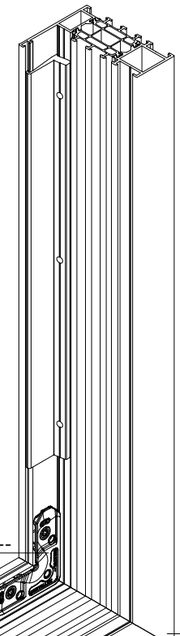

408.0183.XX
508.0183.XX
408.0160.XX
508.0160.XX
408.0125.XX
508.0125.XX
408.0142.XX
508.0142.XX
4F8.0142.XX
5F8.0142.XX
408.0140.XX
508.0140.XX
408.8110.XX
508.8110.XX
408.8130.XX
508.8130.XX
408.8139.XX
508.8139.XX
408.8155.XX
508.8155.XX
408.0283.XX
508.0283.XX
408.0983.XX
508.0983.XX
406.0327.XX

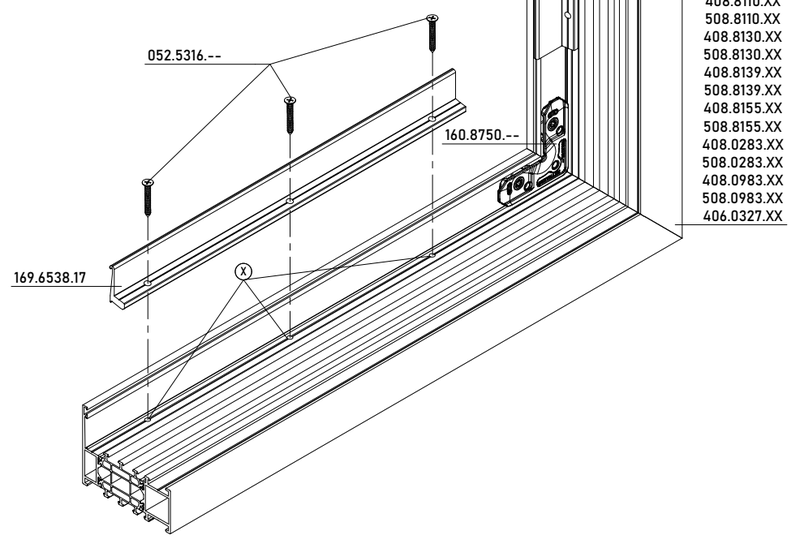

CORNER SOLUTION RC2 RC3

CORNER SOLUTION RC2/RC3

MASTERLINE 8-Fu

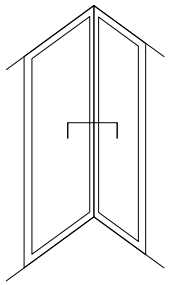

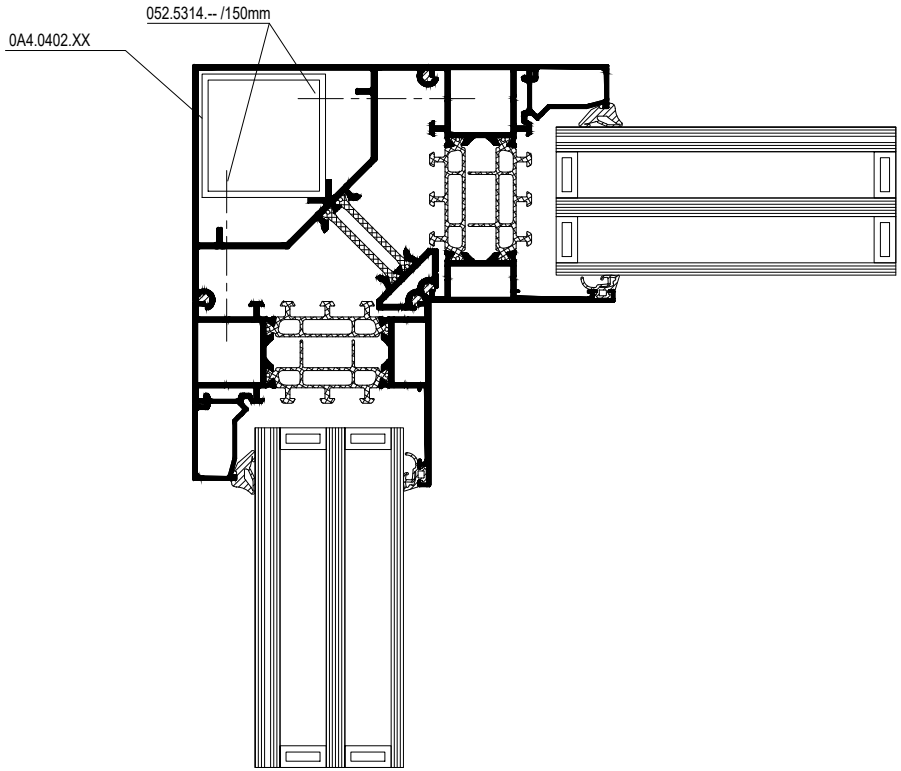

CORNER SOLUTION RC2 RC3

CORNER SOLUTION RC2/RC3

MASTERLINE 8-Fu

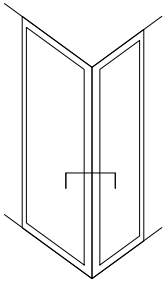

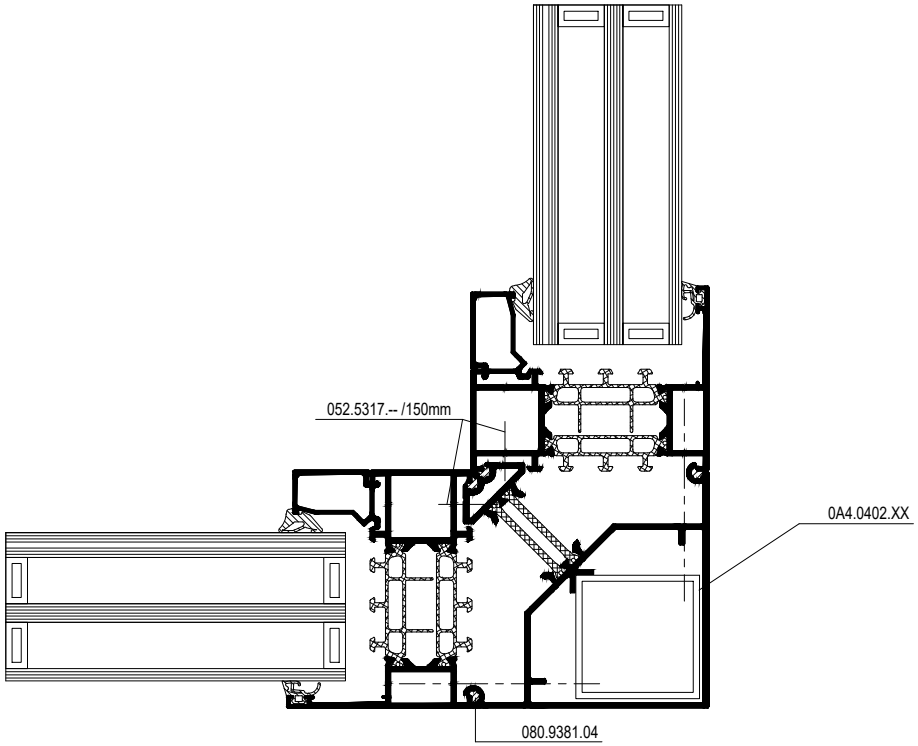

CONNECTION PROFILE DOOR RC3

FIXATION ADDITIONAL PROFILES RC3

MASTERLINE 8-FP, MASTERLINE 8-Fu

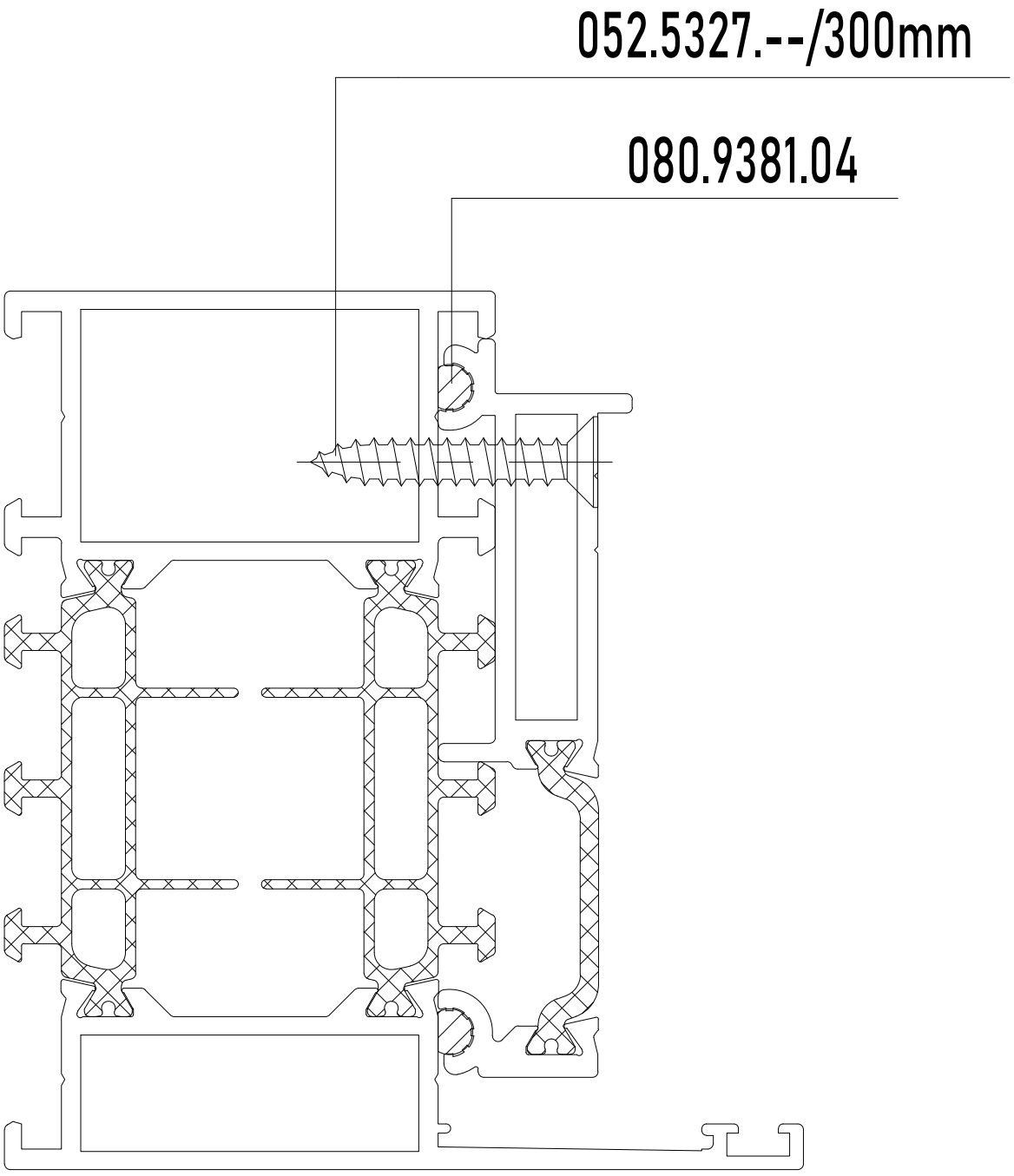

CONNECTION PROFILE DOOR RC3

FIXATION ADDITIONAL PROFILES RC3

MASTERLINE 8-Fu

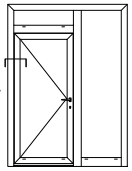

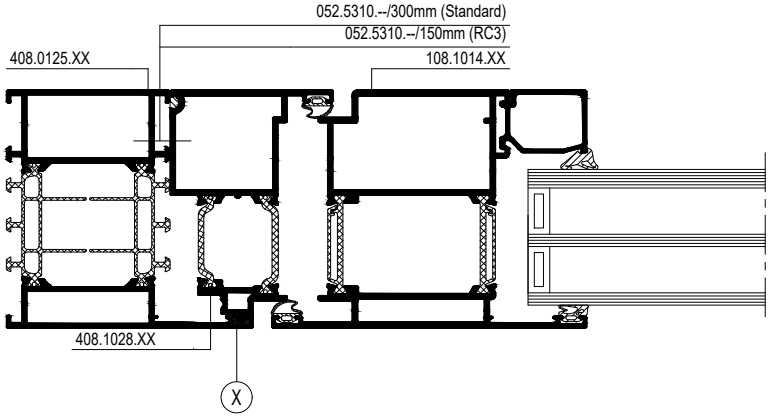

X DICHTINGSMIDDEL
MATIERE D'ETANCHEITE
SEALING AGENT
ABDICHTUNG

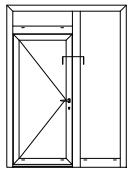

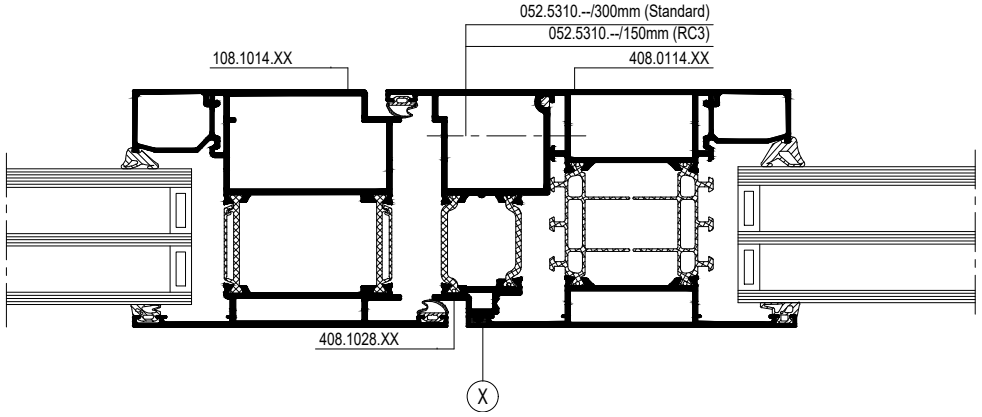

DRAINAGE POSITION GLASS SUPPORT

POSITION GLASS SUPPORT - DRAINAGE

MASTERLINE 8-Fu

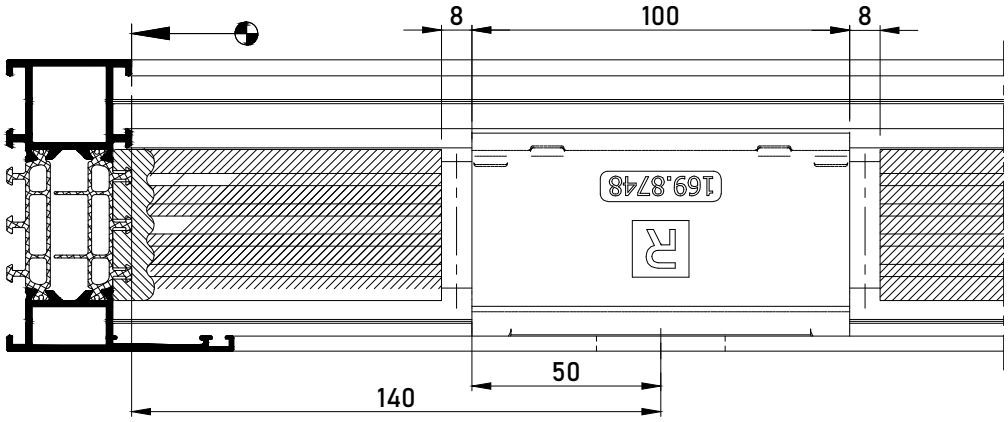

!	ENKEL BIJ VAST RAAM SEULEMENT POUR FENËTRE FIXE ONLY FOR FIXED WINDOW NUR BEI FESTVERGLASUNG

DRAINAGE POSITION GLASS SUPPORT

POSITION GLASS SUPPORT - DRAINAGE

MASTERLINE 8-Fu

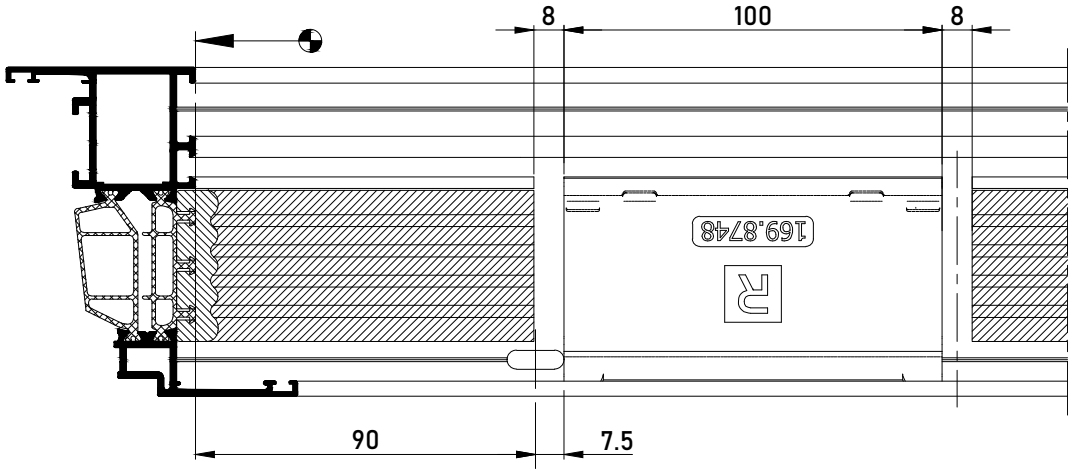

ENKEL BIJ VAST RAAM
SEULEMENT POUR FENËTRE FIXE
ONLY FOR FIXED WINDOW
NUR BEI FESTVERGLASUNG

DRAINAGE POSITION GLASS SUPPORT

POSITION GLASS SUPPORT - DRAINAGE

MASTERLINE 8-Fu

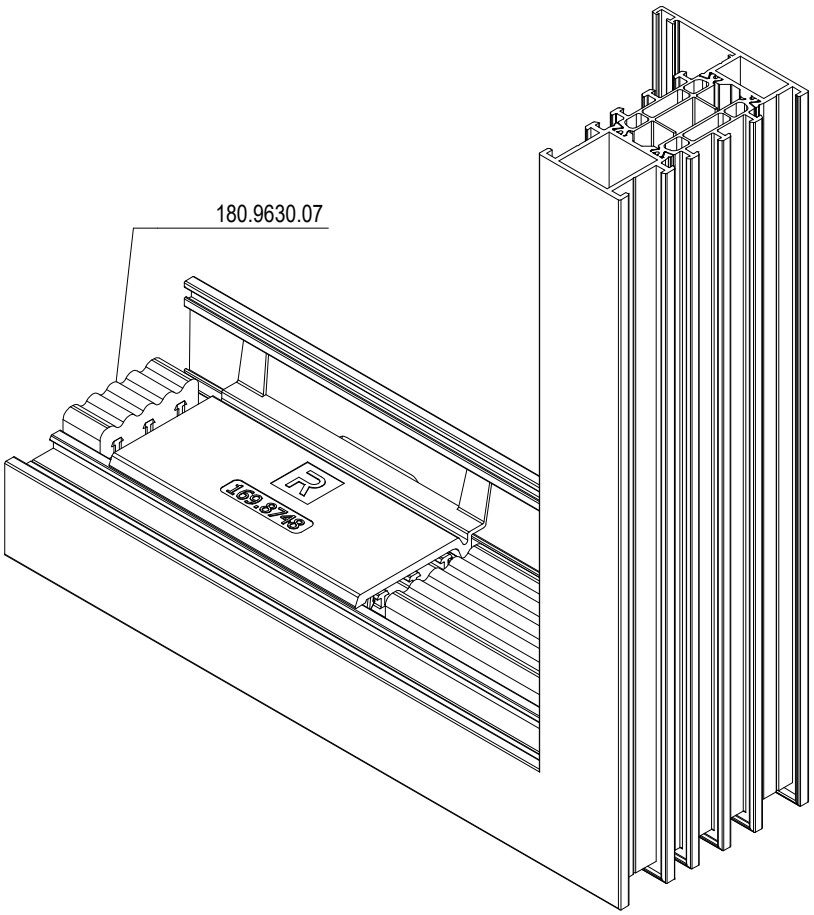

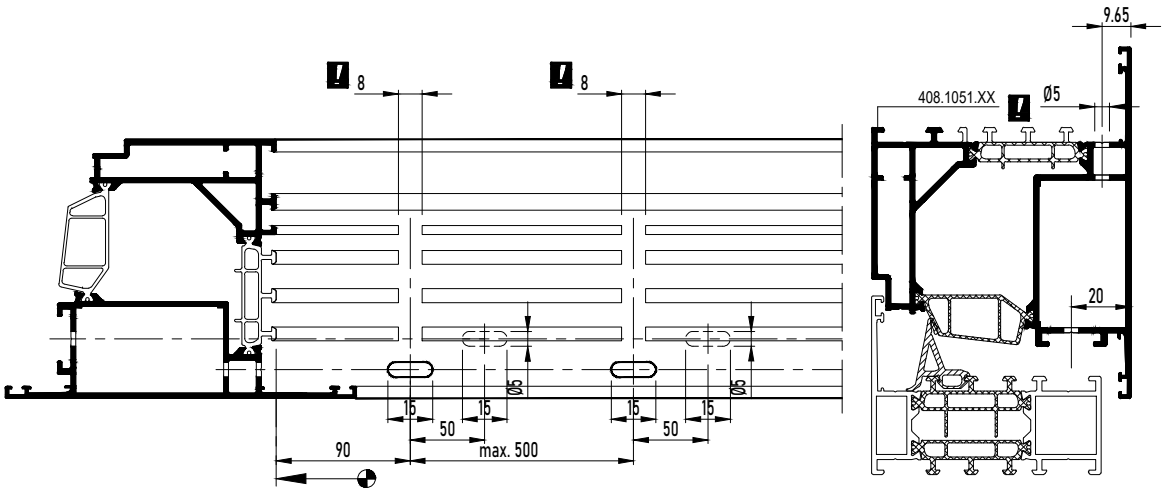
8
8
Ø5
Ø5
15
15
15
15
50
50
90
max. 500
9.65
408.1051.XX
Ø5
20

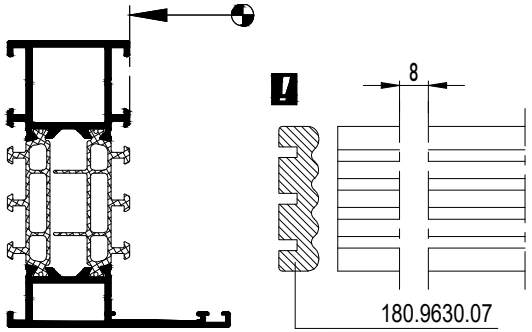
8
180.9630.07

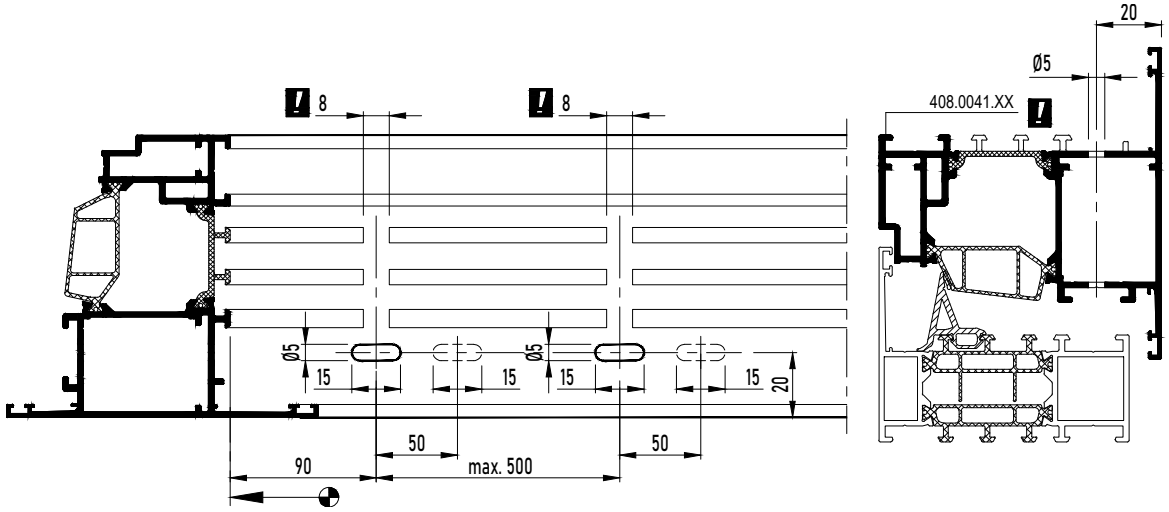
8
8
Ø5
Ø5
15
15
15
15
20
50
50
90
max. 500
20
Ø5
408.0041.XX

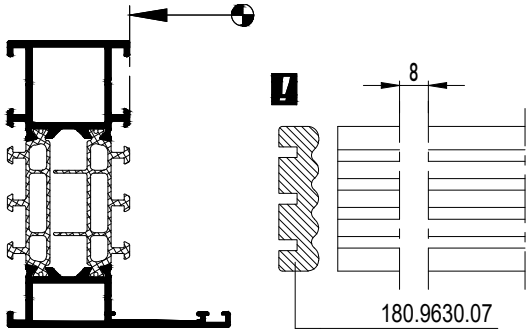
8
180.9630.07

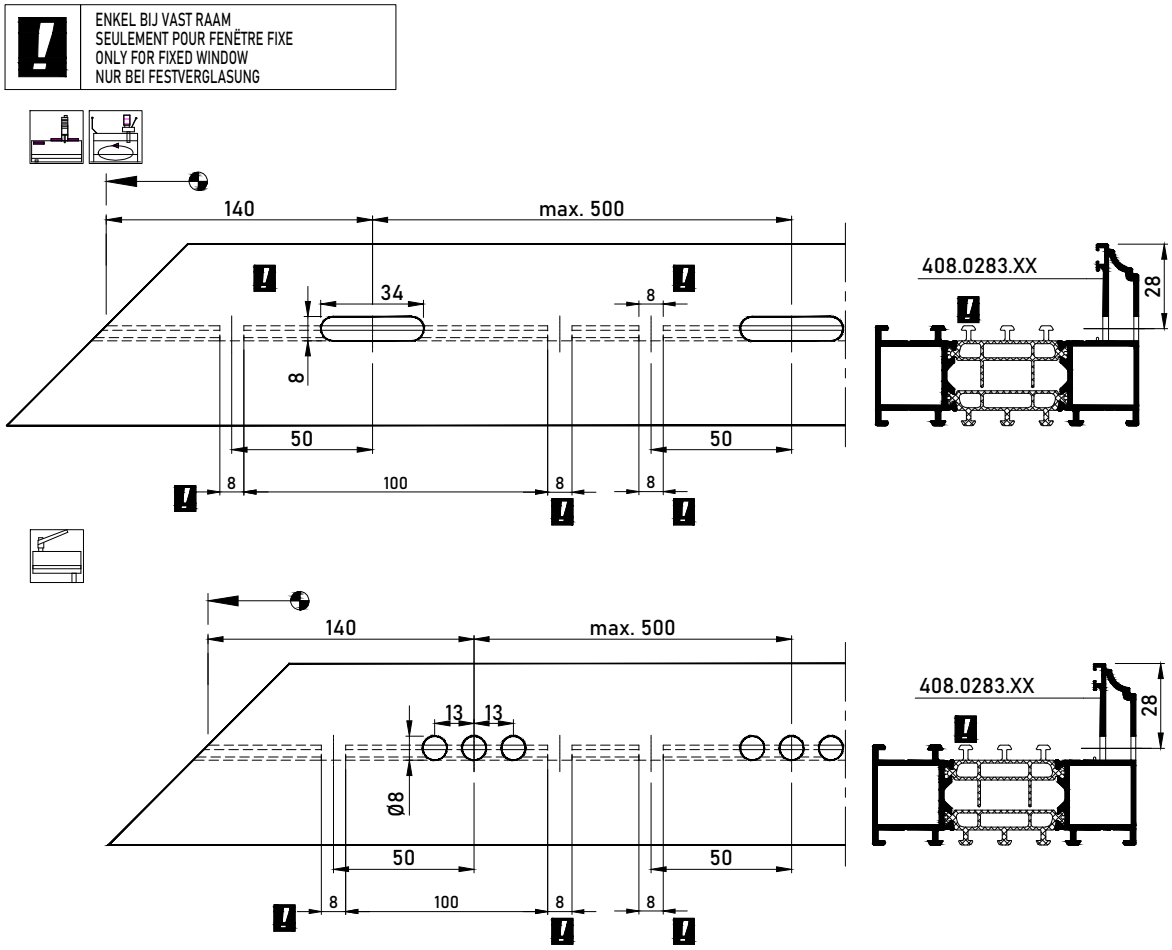
ENKEL BIJ VAST RAAM
SEULEMENT POUR FENÊTRE FIXE
ONLY FOR FIXED WINDOW
NUR BEI FESTVERGLASUNG
140
max. 500
34
8
8
50
50
8
100
8
8
408.0283.XX
28
140
max. 500
13
13
Ø8
50
50
8
100
8
8
408.0283.XX
28

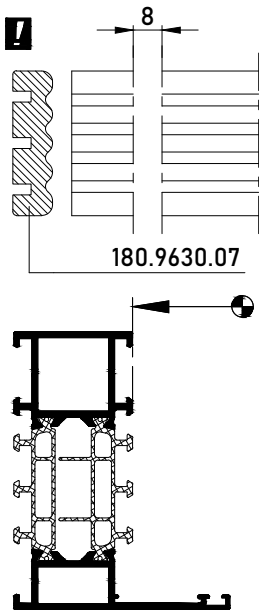
8
180.9630.07

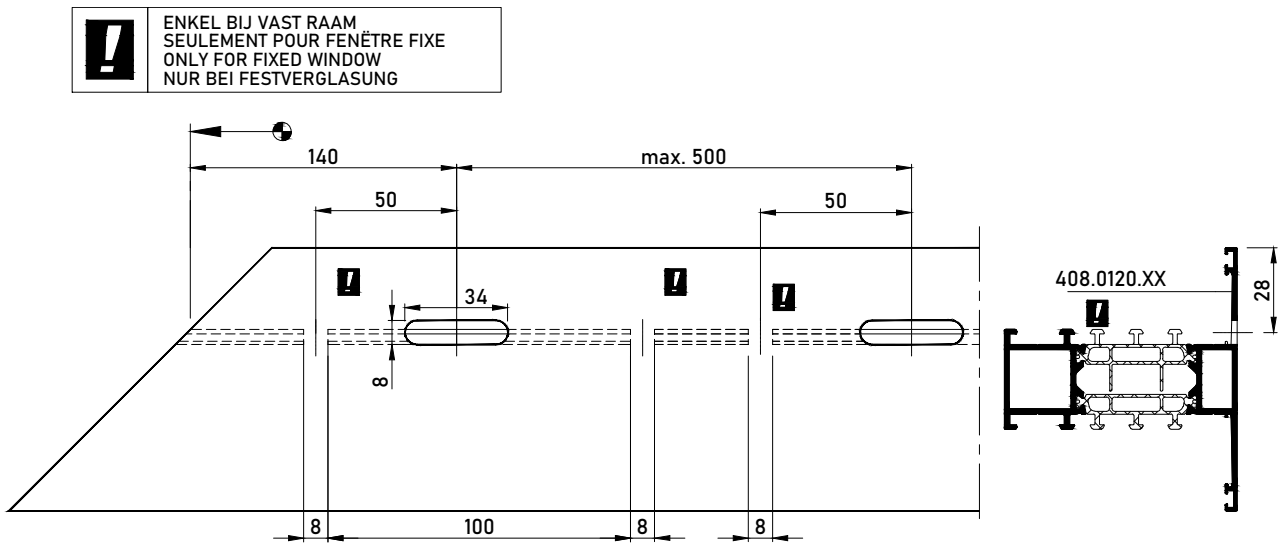
ENKEL BIJ VAST RAAM
SEULEMENT POUR FENËTRE FIXE
ONLY FOR FIXED WINDOW
NUR BEI FESTVERGLASUNG
140
max. 500
50
50
34
8
8
100
8
8
408.0120.XX
28

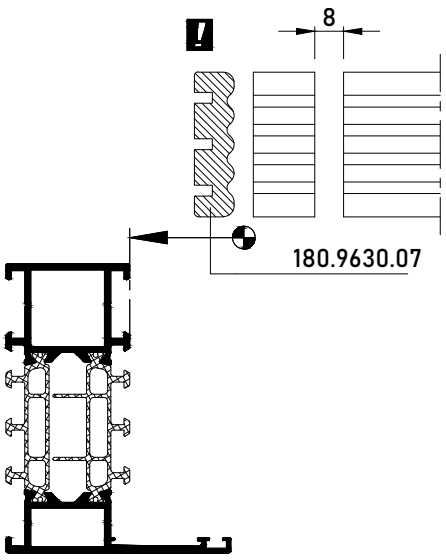
8
180.9630.07

ENKEL BIJ VAST RAAM
SEULEMENT POUR FENËTRE FIXE
ONLY FOR FIXED WINDOW
NUR BEI FESTVERGLASUNG

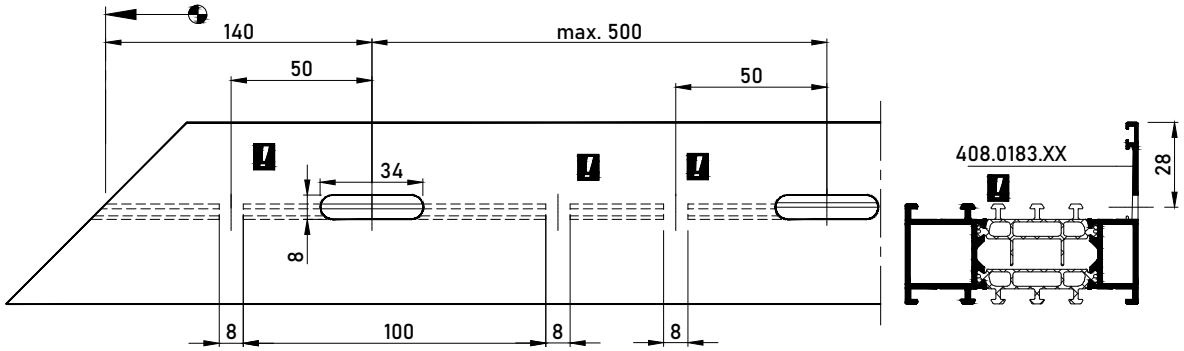

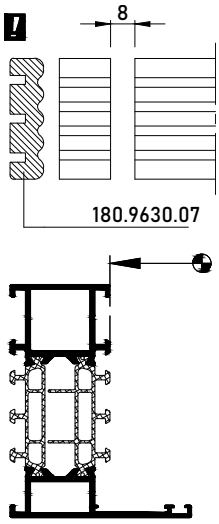
8
180.9630.07

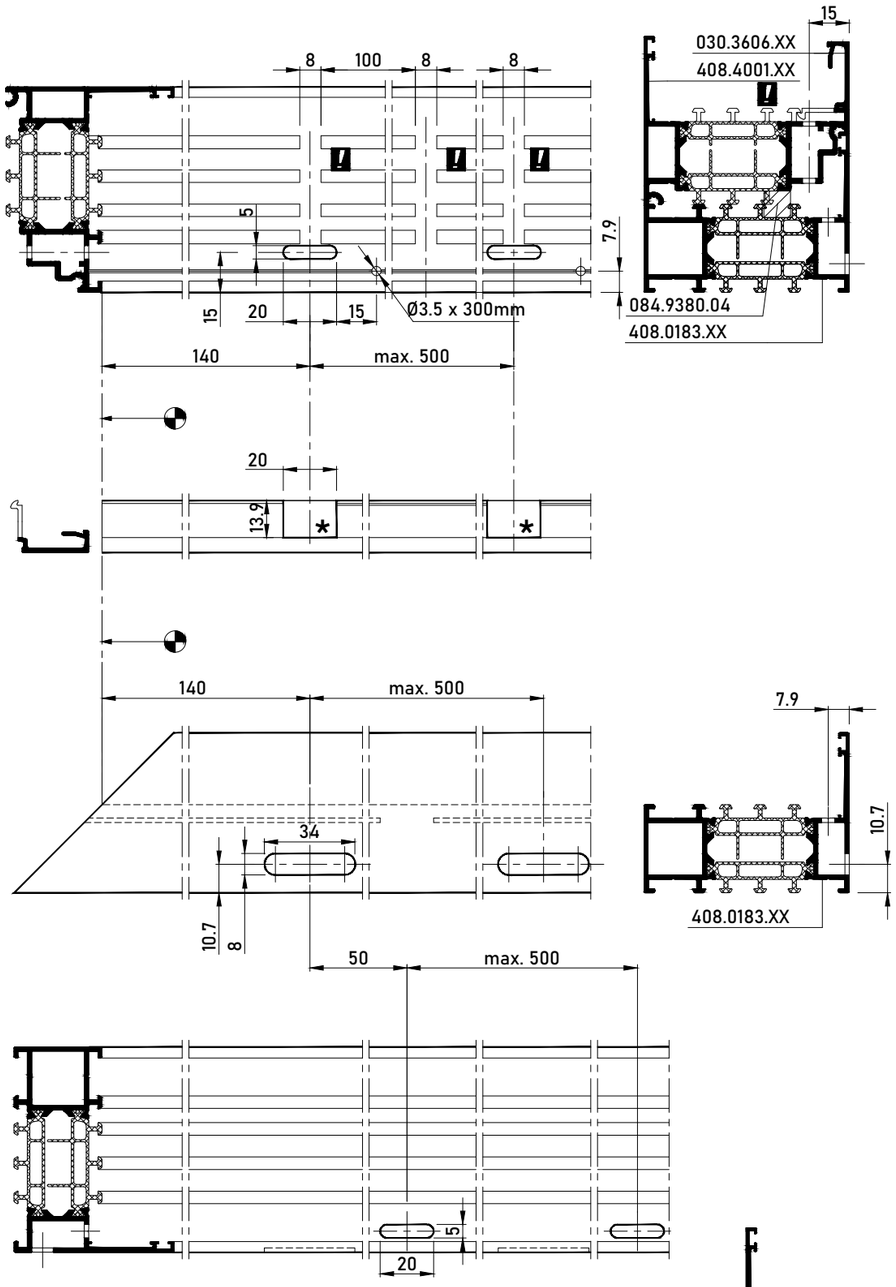

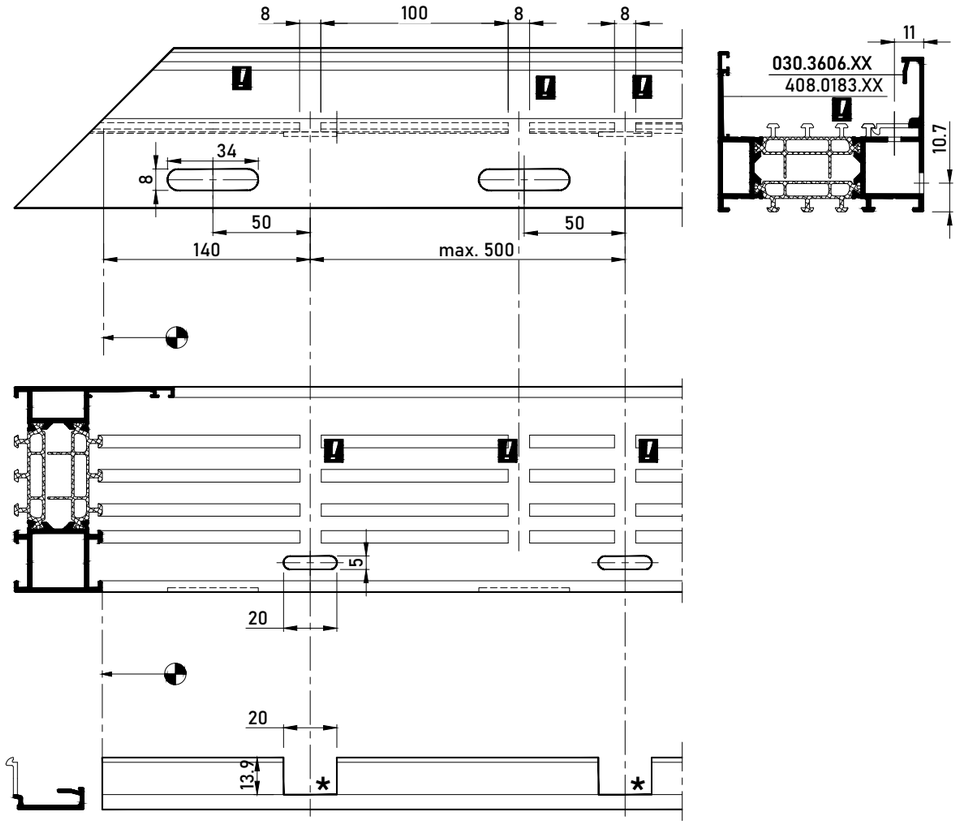

*
De uitfrezingen voor ontwatering van de glaslat dienen recht boven de ontwateringsgaten van de kader te gebeuren.
Le poinçonnage pour le drainge de la parclose doit être positionné juste au-dessous des trous de drainage du dormant.
The drilling for the glazing bead drainage must be done straight above the drainage holes of the outer frame.
Die Ausfräsung für die Entwässerung der Glasleiste soll genau über den Entwässerungslöcher des Blendrahmens positioniert sein

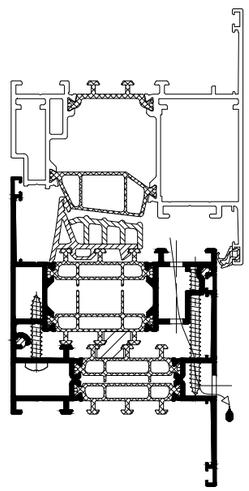

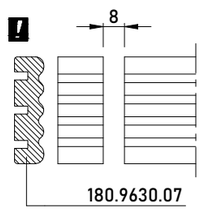

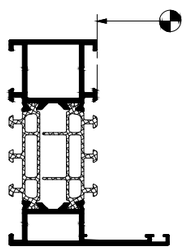

ENKEL BIJ VAST RAAM
SEULEMENT POUR FENÊTRE FIXE
ONLY FOR FIXED WINDOW
NUR BEI FESTVERGLASUNG

DRAINAGE MC

DRAINAGE CHANGEOVER PROFILE

MASTERLINE 8-Fu

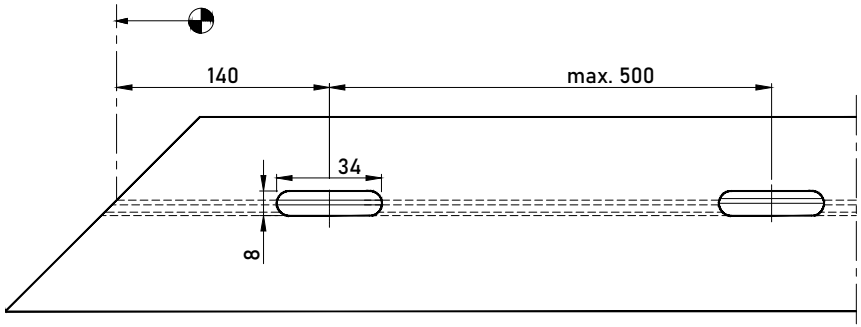

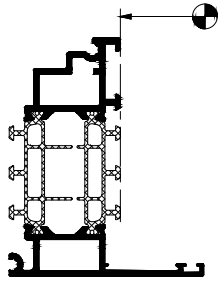

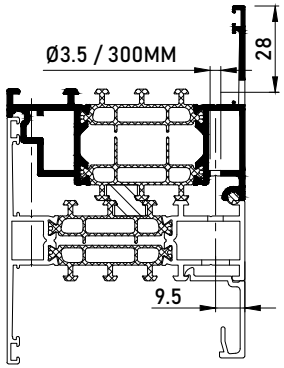

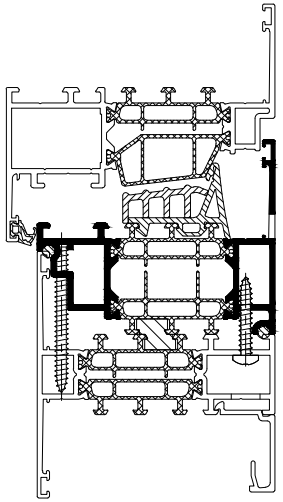

DRAINAGE MC

DRAINAGE CHANGEOVER PROFILE

MASTERLINE 8-Fu

*

De uitfrezingen voor ontwatering van de glaslat dienen recht boven de ontwateringsgaten van de kader te gebeuren.
Le poinçonnage pour le drainge de la parclose doit être positionné juste au-dessous des trous de drainage du dormant.
The drilling for the glazing bead drainage must be done straight above the drainage holes of the outer frame.
Die Ausfräsung für die Entwässerung der Glasleiste soll genau über den Entwässerungslöcher des Blendrahmens positioniert sein

ENKEL BIJ VAST RAAM
SEULEMENT POUR FENÊTRE FIXE
ONLY FOR FIXED WINDOW
NUR BEI FESTVERGLASUNG

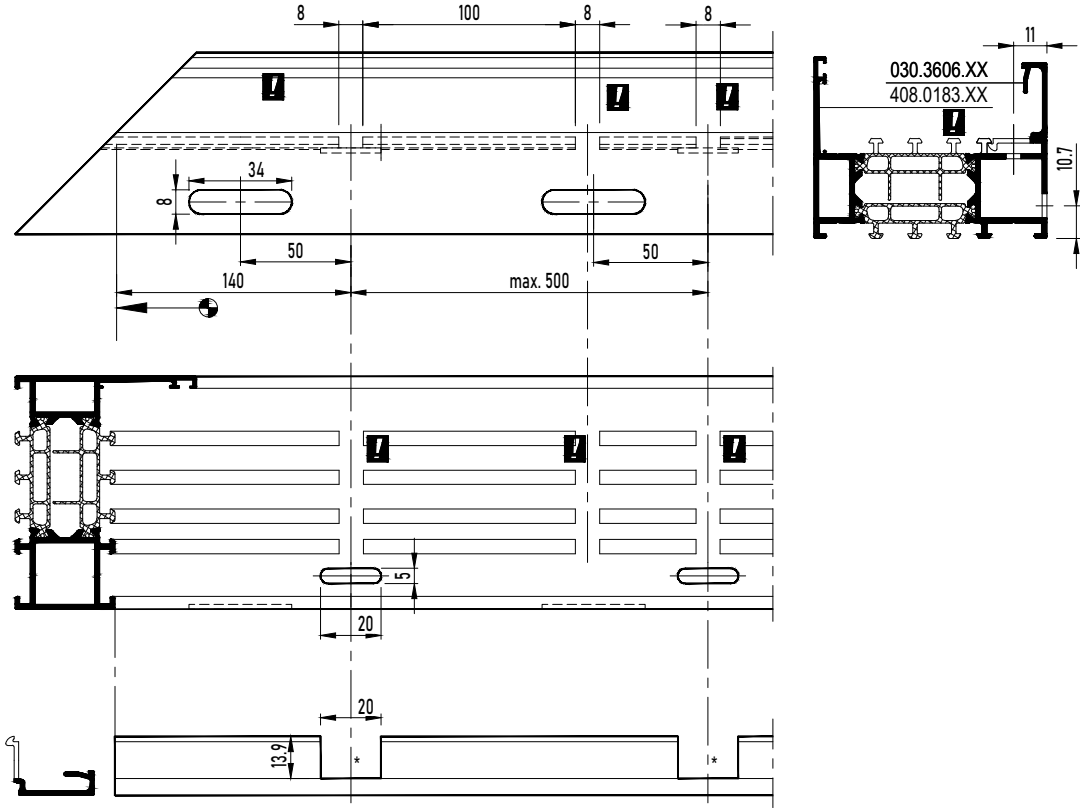

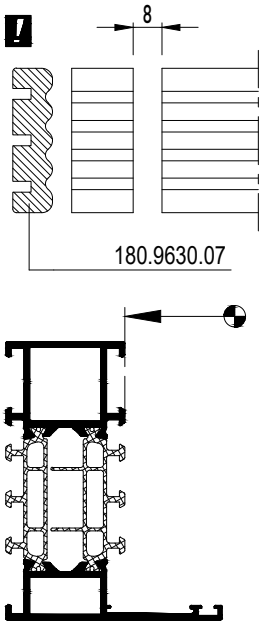
8
180.9630.07

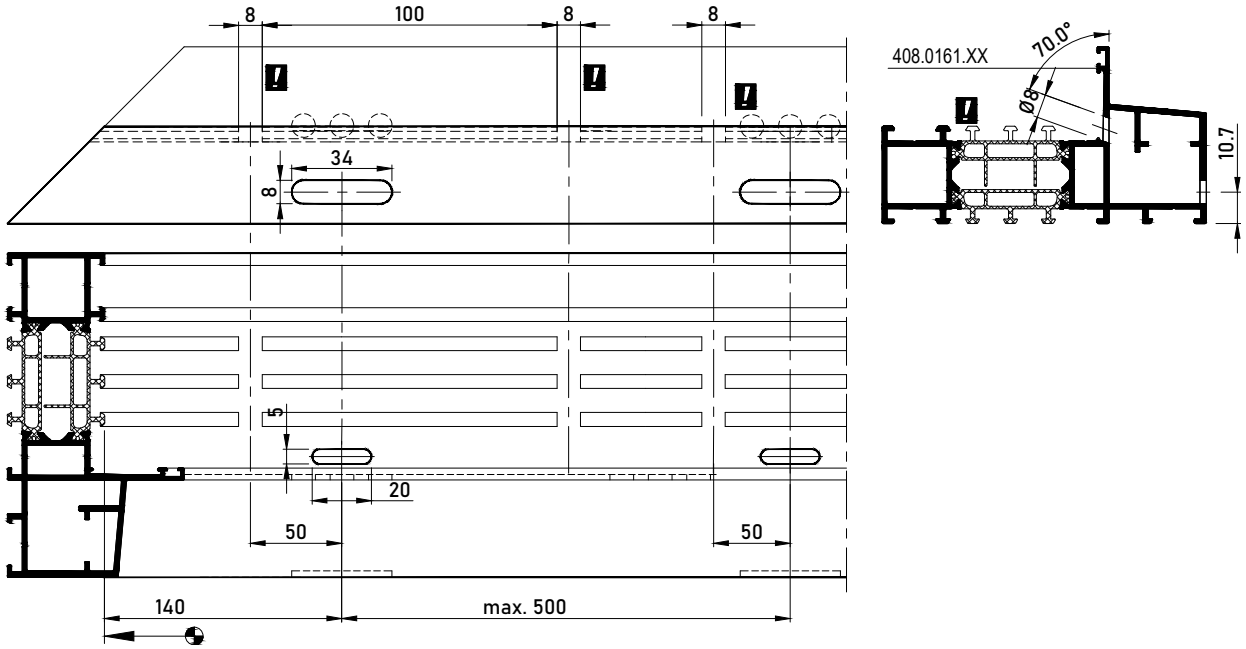
8
100
8
8
34
8
5
20
50
50
140
max. 500
408.0161.XX
70.0°
Ø8
10.7

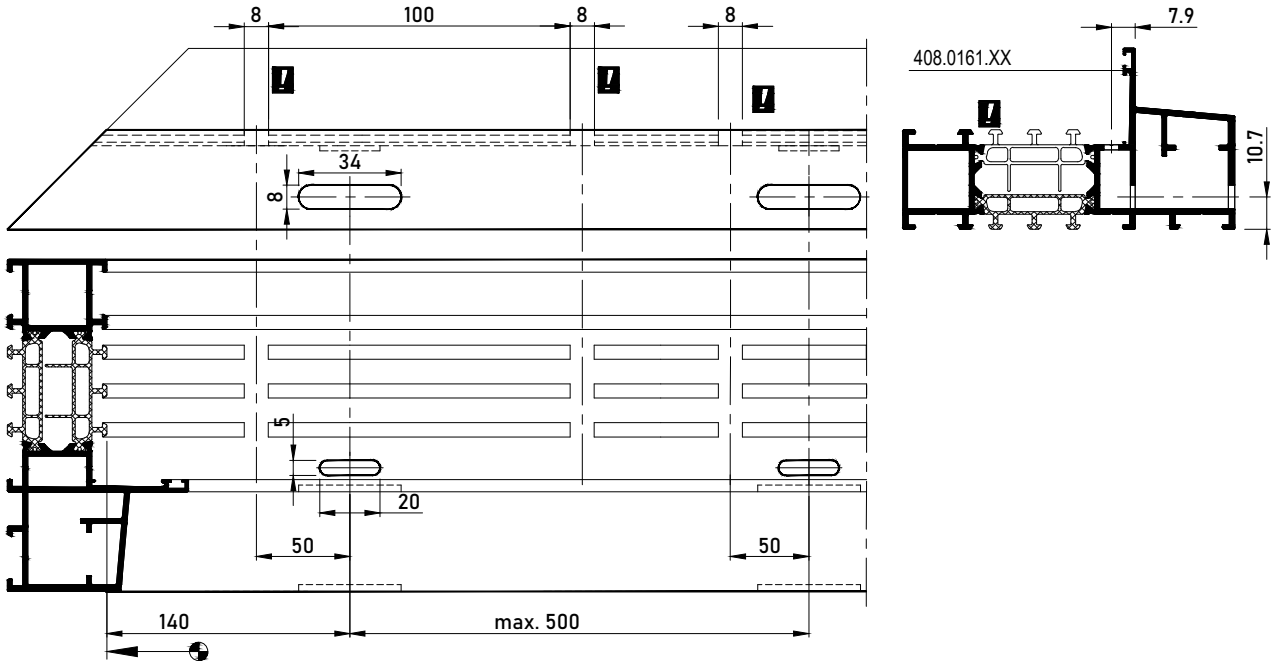
8
100
8
8
34
8
5
20
50
50
140
max. 500
7.9
408.0161.XX
10.7

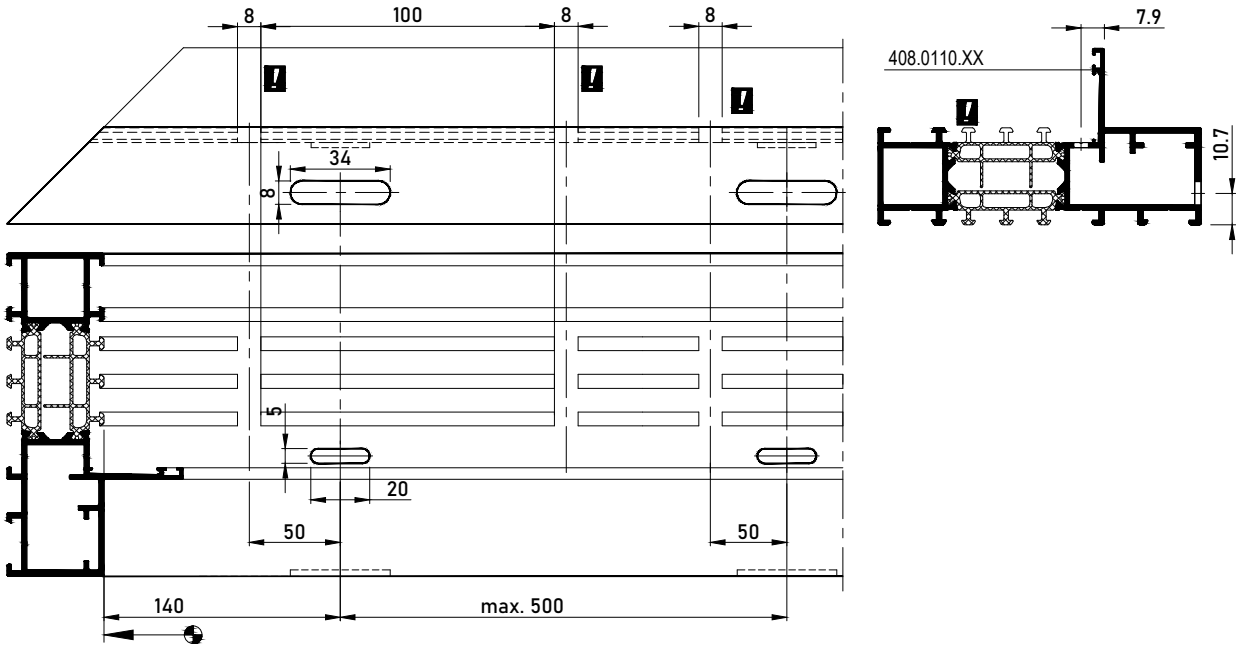
8
100
8
8
34
8
5
20
50
50
140
max. 500
7.9
408.0110.XX
10.7

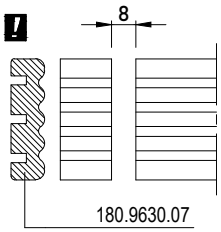
8
180.9630.07

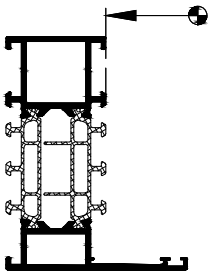

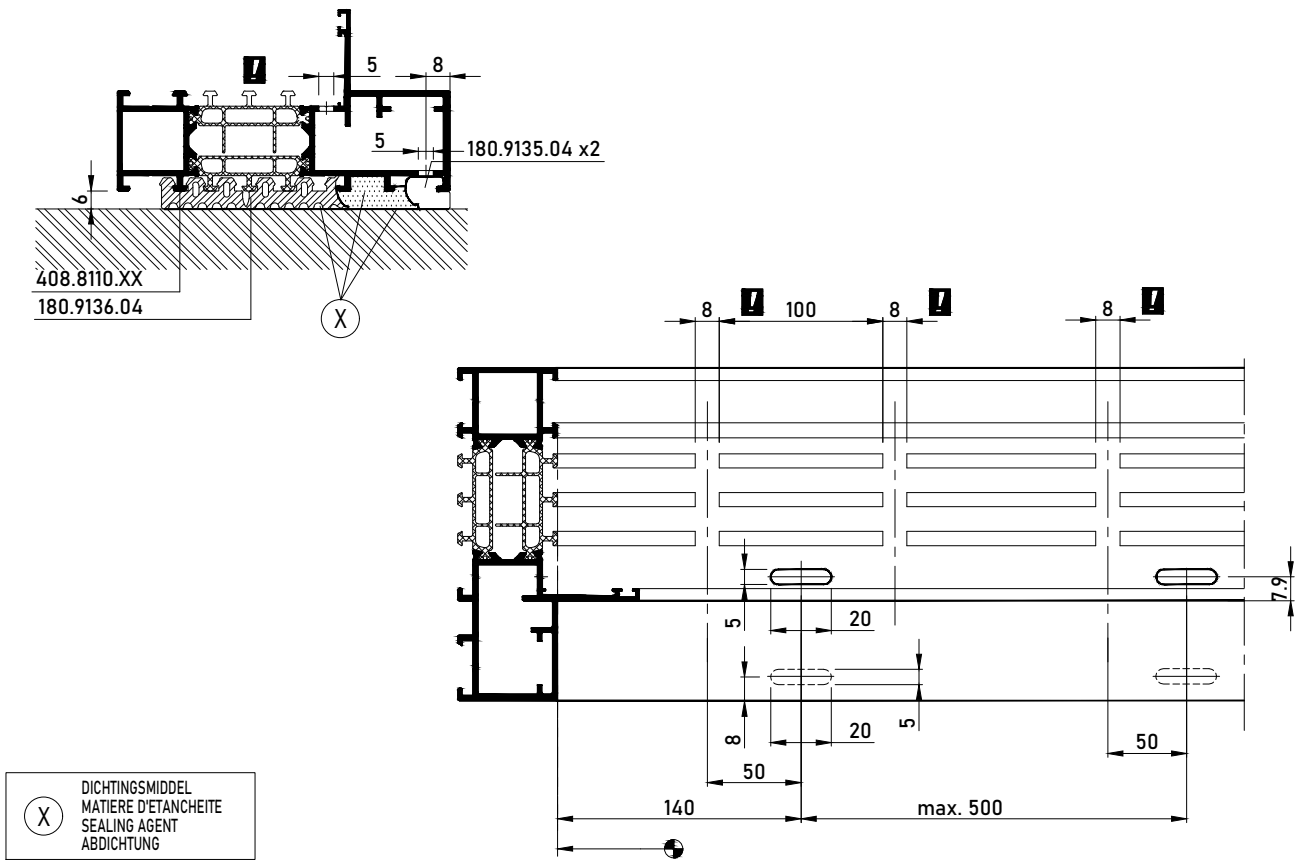
5
8
5
180.9135.04 x2
6
408.8110.XX
180.9136.04
X
8
100
8
8
7.9
5
20
8
20
5
50
50
140
max. 500
X
DICHTINGSMIDDEL
MATIERE D'ETANCHEITE
SEALING AGENT
ABDICHTUNG

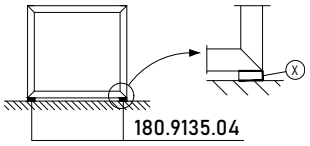
X
180.9135.04

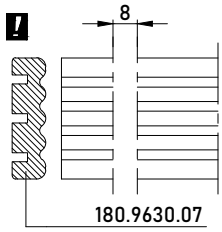
8
180.9630.07

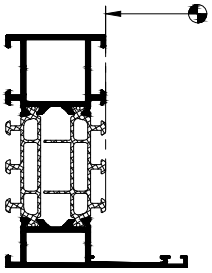

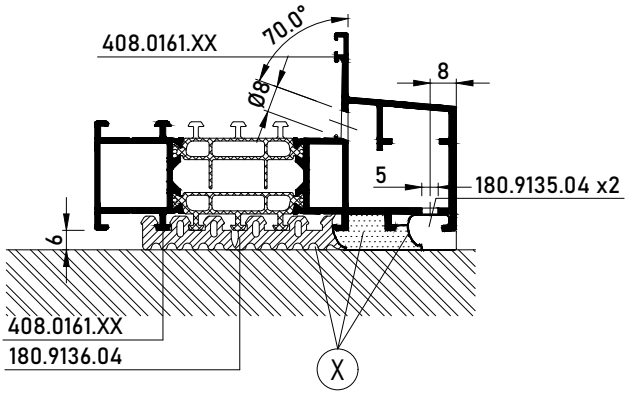

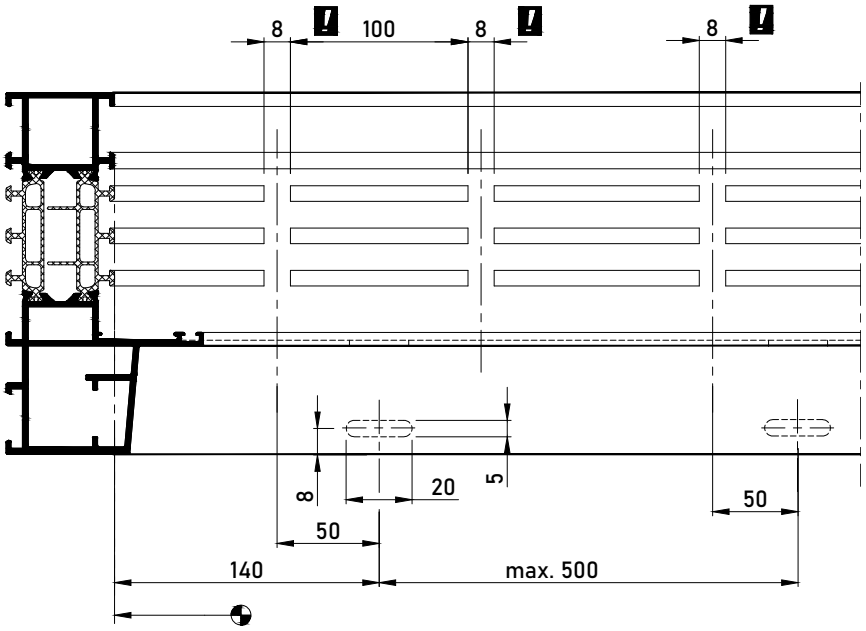

X DICHTINGSMIDDEL
MATIERE D'ETANCHEITE
SEALING AGENT
ABDICHTUNG

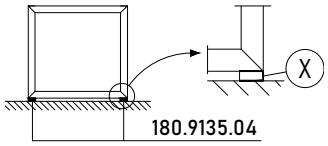
X
180.9135.04

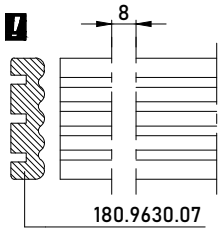
8
180.9630.07

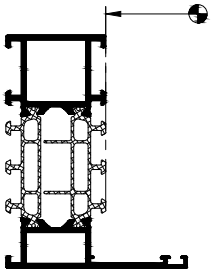

ENKEL BIJ VAST RAAM
SEULEMENT POUR FENËTRE FIXE
ONLY FOR FIXED WINDOW
NUR BEI FESTVERGLASUNG

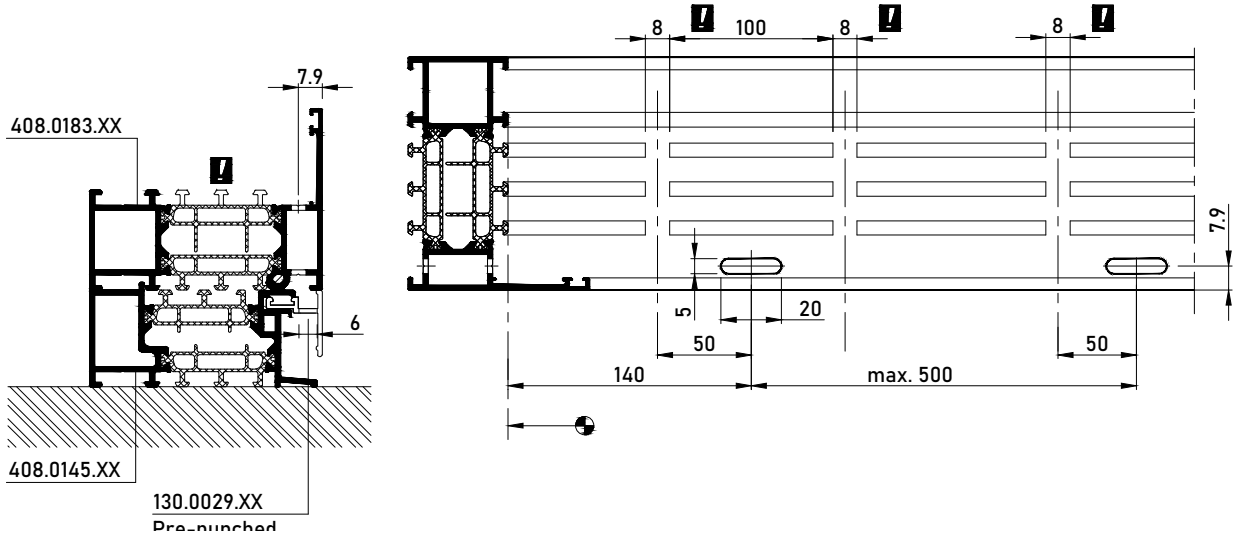

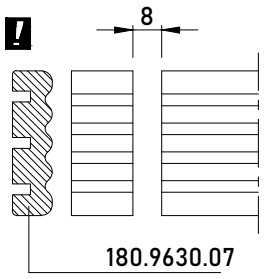
8
180.9630.07

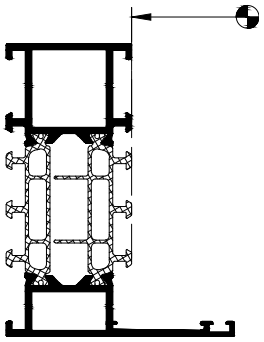

*

De uitfrezingen voor ontwatering van de glaslat dienen recht boven de ontwateringsgaten van de kader te gebeuren. Le poinçonnage pour le draingе de la parclose doit être positionné juste au-dessous des trous de drainage du dormant. The drilling for the glazing bead drainage must be done straight above the drainage holes of the outer frame. Die Ausfräsung für die Entwässerung der Glasleiste soll genau über den Entwässerungslöcher des Blendrahmens positioniert sein	!	ENKEL BIJ VAST RAAM SEULEMENT POUR FENËTRE FIXE ONLY FOR FIXED WINDOW NUR BEI FESTVERGLASUNG
	(X)	DICHTINGSMIDDEL MATIERE D'ETANCHEITE SEALING AGENT ABDICHTUNG

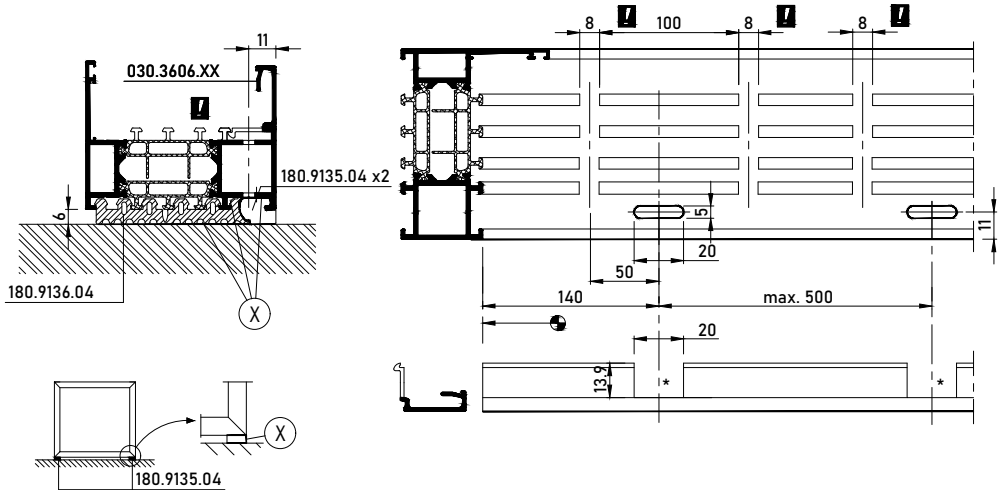

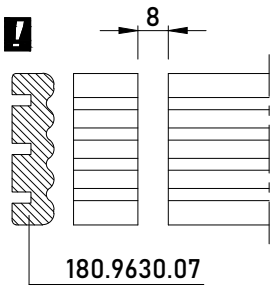
8
180.9630.07

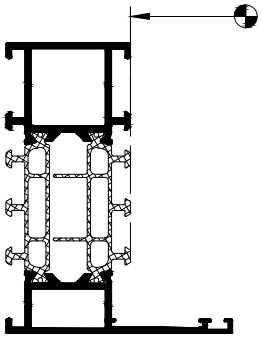

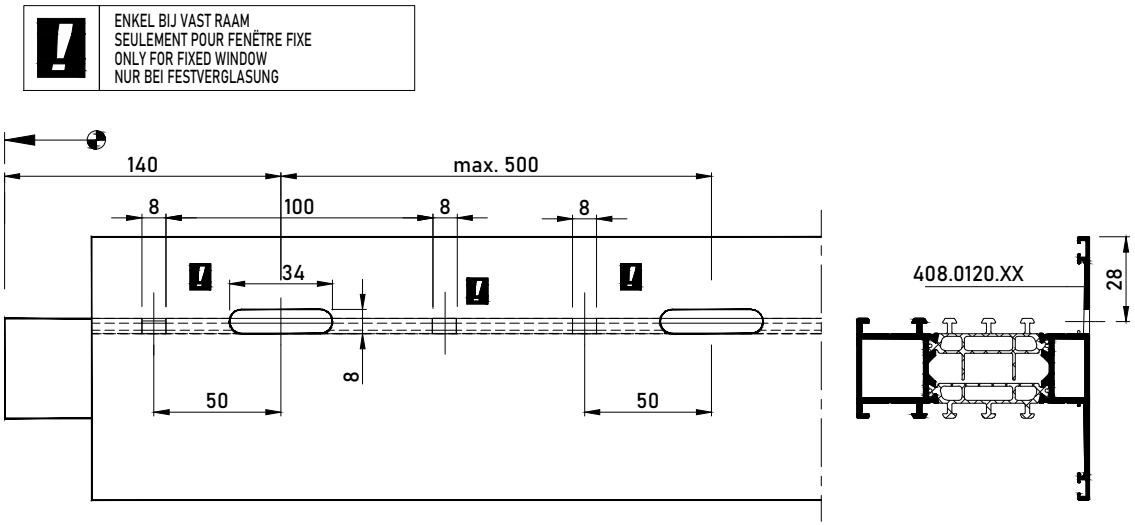
ENKEL BIJ VAST RAAM
SEULEMENT POUR FENÊTRE FIXE
ONLY FOR FIXED WINDOW
NUR BEI FESTVERGLASUNG
140
max. 500
8
100
8
8
34
8
50
50
408.0120.XX
28

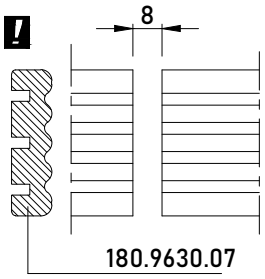
8
180.9630.07

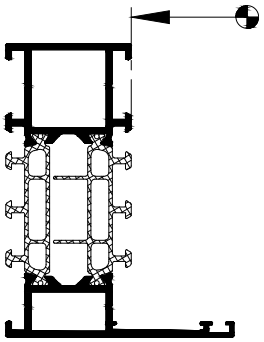

Ontwatering

VOLGORDE
1. Correct ponsen, boren of frezen
2. Ontbramen (Indien noodzakelijk)
3. Stof en zaagresten verwijderen
4. Ontvetten met Degreaser, art. nr. 086.9210.--
5. Anticorrosieproduct aanbrengen, art. nr. 086.9208.--, 086.9225.--

Drainage

ORDRE
1. Poinçonnage, forage ou fraisage correct
2. Ebavurage (si nécessaire)
3. Enlèvement des poussières et des copeaux
4. Dégraissage avec Degreaser, art. nr. 086.9210.--
5. Application de produit anti-corrosion, art. nr. 086.9208.--, 086.9225.--

Drainage

SEQUENCE
1. Correct punching, drilling or milling
2. Deburring (if necessary)
3. Removing dust and saw-dust
4. Degreasing with Degreaser, art. nr. 086.9210.--
5. Applying anti-corrosion product, art. nr. 086.9208.--, 086.9225.--

Entwässerung

REIHENFOLGE
1. Stanzen, bohren oder fräsen
2. Entgraten (falls erforderlich)
3. Staub und Sägereste entfernen
4. Entfetten mit Degreaser, art. nr. 086.9210.--
5. Korrosionsschutzprodukt aufbringen, art. nr. 086.9208.--, 086.9225.--

OPTION 1: MILLED HOLES

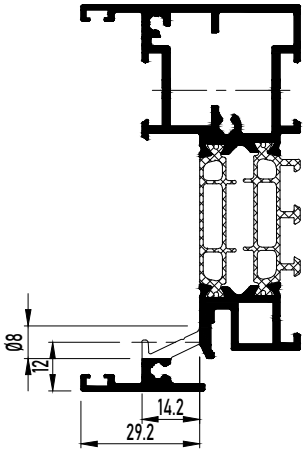

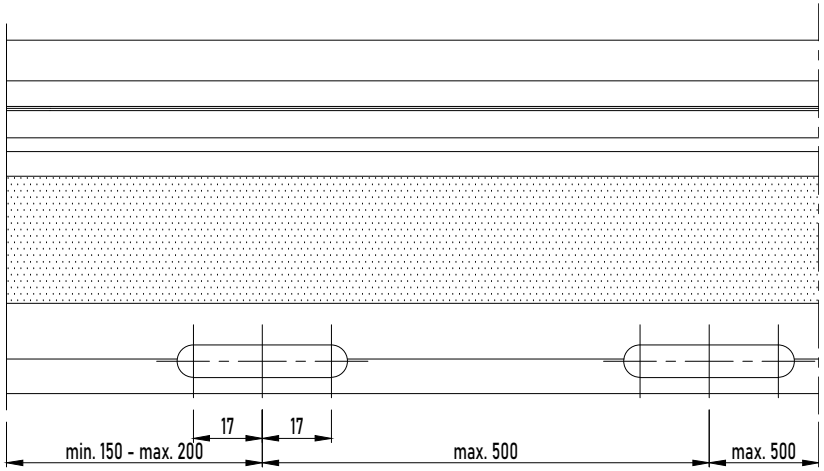

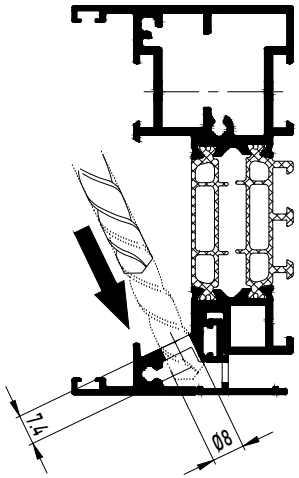

OPTION 2: DRILLED HOLES

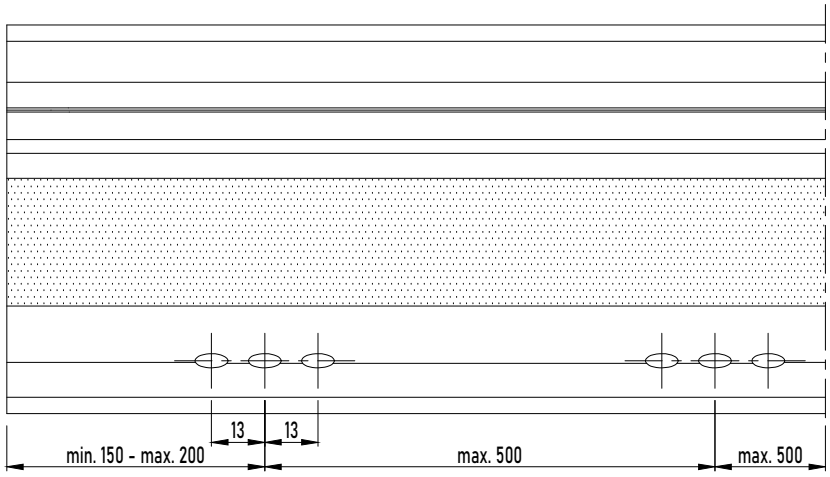

Ontwatering

VOLGORDE
1. Correct ponsen, boren of frezen
2. Ontbramen (Indien noodzakelijk)
3. Stof en zaagresten verwijderen
4. Ontvetten met Degreaser, art. nr. 086.9210.--
5. Anticorrosieproduct aanbrengen, art. nr. 086.9208.--, 086.9225.--

Drainage

ORDRE
1. Poinçonnage, forage ou fraisage correct
2. Ebavurage (si nécessaire)
3. Enlèvement des poussières et des copeaux
4. Dégraissage avec Degreaser, art. nr. 086.9210.--
5. Application de produit anti-corrosion, art. nr. 086.9208.--, 086.9225.--

Drainage

SEQUENCE
1. Correct punching, drilling or milling
2. Deburring (if necessary)
3. Removing dust and saw-dust
4. Degreasing with Degreaser, art. nr. 086.9210.--
5. Applying anti-corrosion product, art. nr. 086.9208.--, 086.9225.--

Entwässerung

REIHENFOLGE
1. Stanzen, bohren oder fräsen
2. Entgraten (falls erforderlich)
3. Staub und Sägereste entfernen
4. Entfetten mit Degreaser, art. nr. 086.9210.--
5. Korrosionsschutzprodukt aufbringen, art. nr. 086.9208.--, 086.9225.--

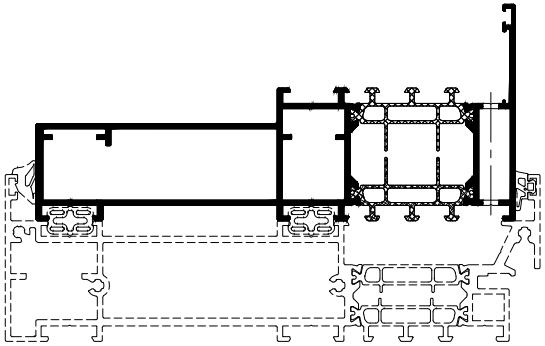

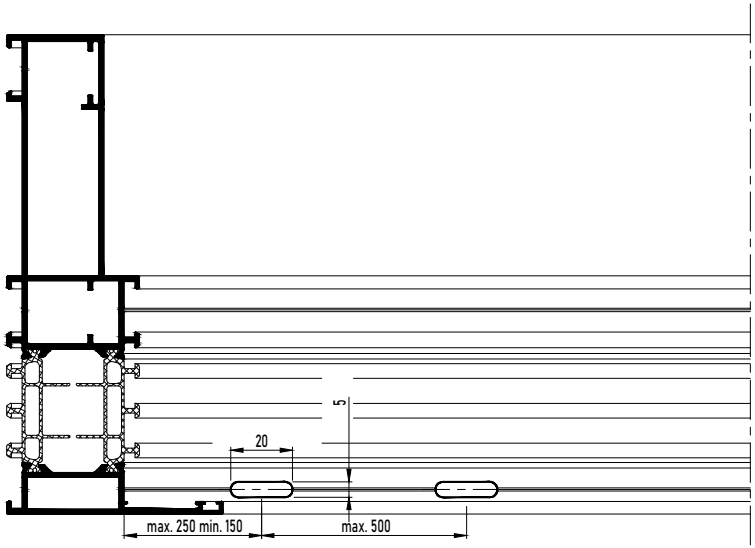

Ontwatering

VOLGORDE
1. Correct ponsen, boren of frezen
2. Ontbramen (indien noodzakelijk)
3. Stof en zaagresten verwijderen
4. Ontvetten met Degreaser, art. nr. 086.9210.--
5. Anticorrosieproduct aanbrengen, art. nr. 086.9208.--, 086.9225.--

Drainage

ORDRE
1. Poinçonnage, forage ou fraisage correct
2. Ebavurage (si nécessaire)
3. Enlèvement des poussières et des copeaux
4. Dégraissage avec Degreaser, art. nr. 086.9210.--
5. Application de produit anti-corrosion, art. nr. 086.9208.--, 086.9225.--

Drainage

SEQUENCE
1. Correct punching, drilling or milling
2. Deburring (if necessary)
3. Removing dust and saw-dust
4. Degreasing with Degreaser, art. nr. 086.9210.--
5. Applying anti-corrosion product, art. nr. 086.9208.--, 086.9225.--

Entwässerung

REIHENFOLGE
1. Stanzen, bohren oder fräsen
2. Entgraten (falls erforderlich)
3. Staub und Sägereste entfernen
4. Entfetten mit Degreaser, art. nr. 086.9210.--
5. Korrosionsschutzprodukt aufbringen, art. nr. 086.9208.--, 086.9225.--

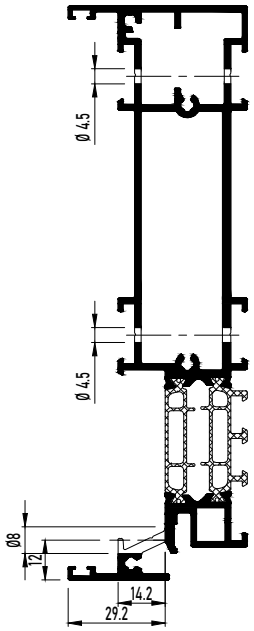

OPTION 1: MILLED HOLES

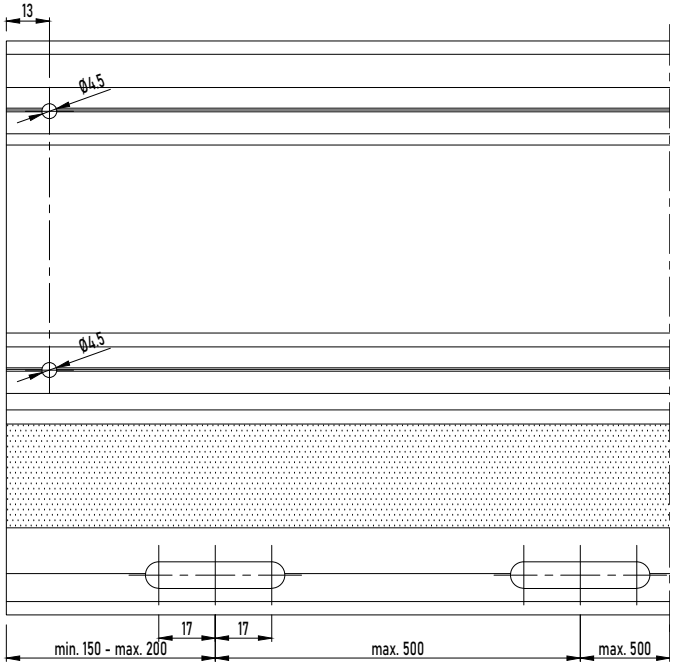

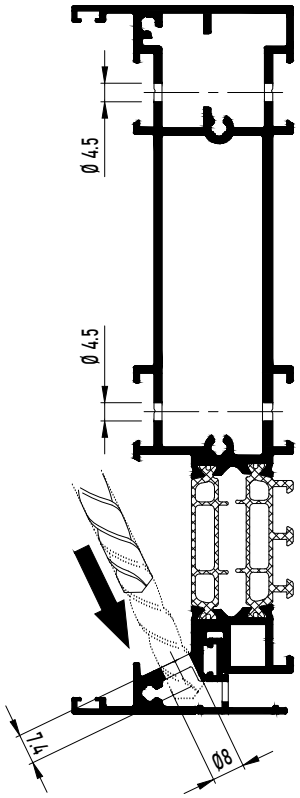

OPTION 2: DRILLED HOLES

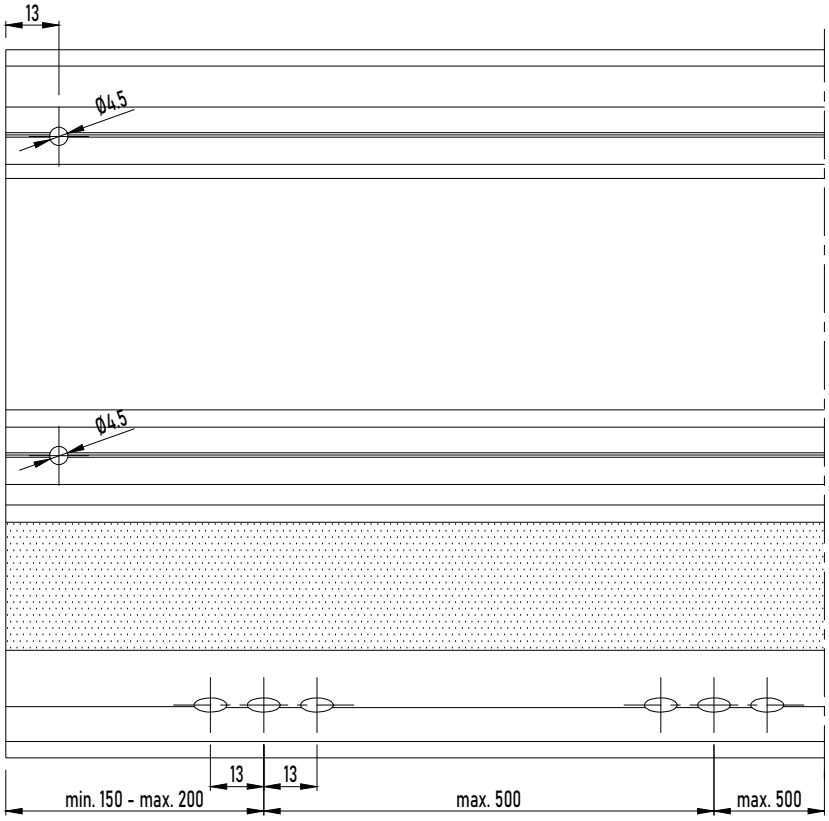

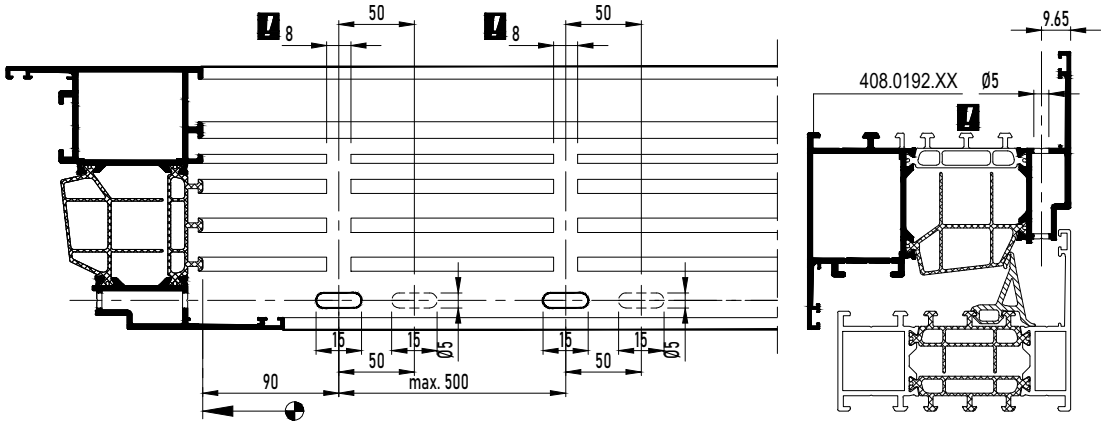
8
50
8
50
15
15
Ø5
15
15
Ø5
50
50
90
max. 500
9.65
408.0192.XX
Ø5

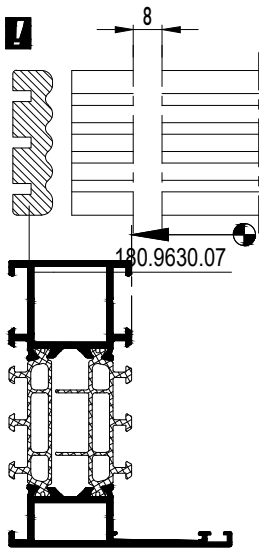
8
180.9630.07

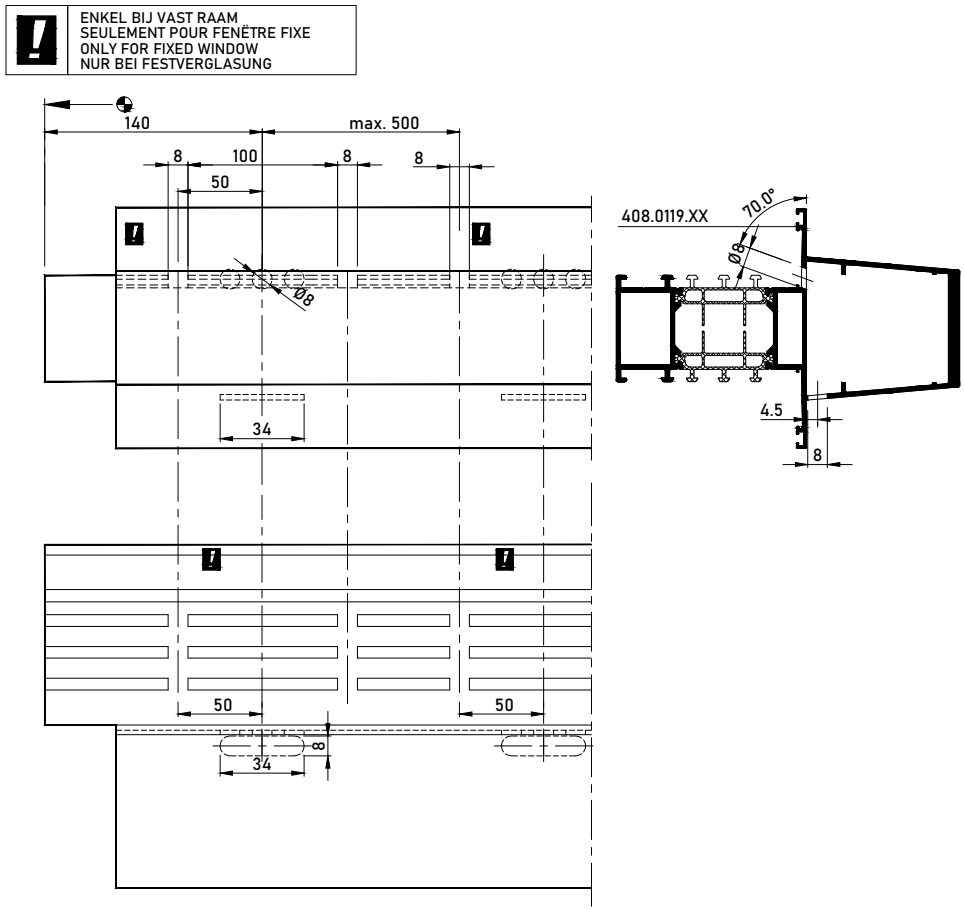
ENKEL BIJ VAST RAAM
SEULEMENT POUR FENÊTRE FIXE
ONLY FOR FIXED WINDOW
NUR BEI FESTVERGLASUNG
140
max. 500
8
100
8
8
50
Ø8
34
50
50
8
34
408.0119.XX
70.0°
Ø8
4.5
8

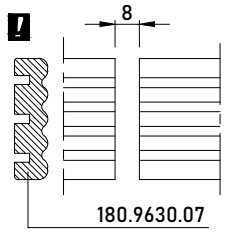
8
180.9630.07

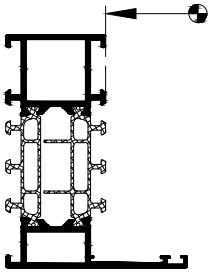

!	ENKEL BIJ VAST RAAM SEULEMENT POUR FENËTRE FIXE ONLY FOR FIXED WINDOW NUR BEI FESTVERGLASUNG

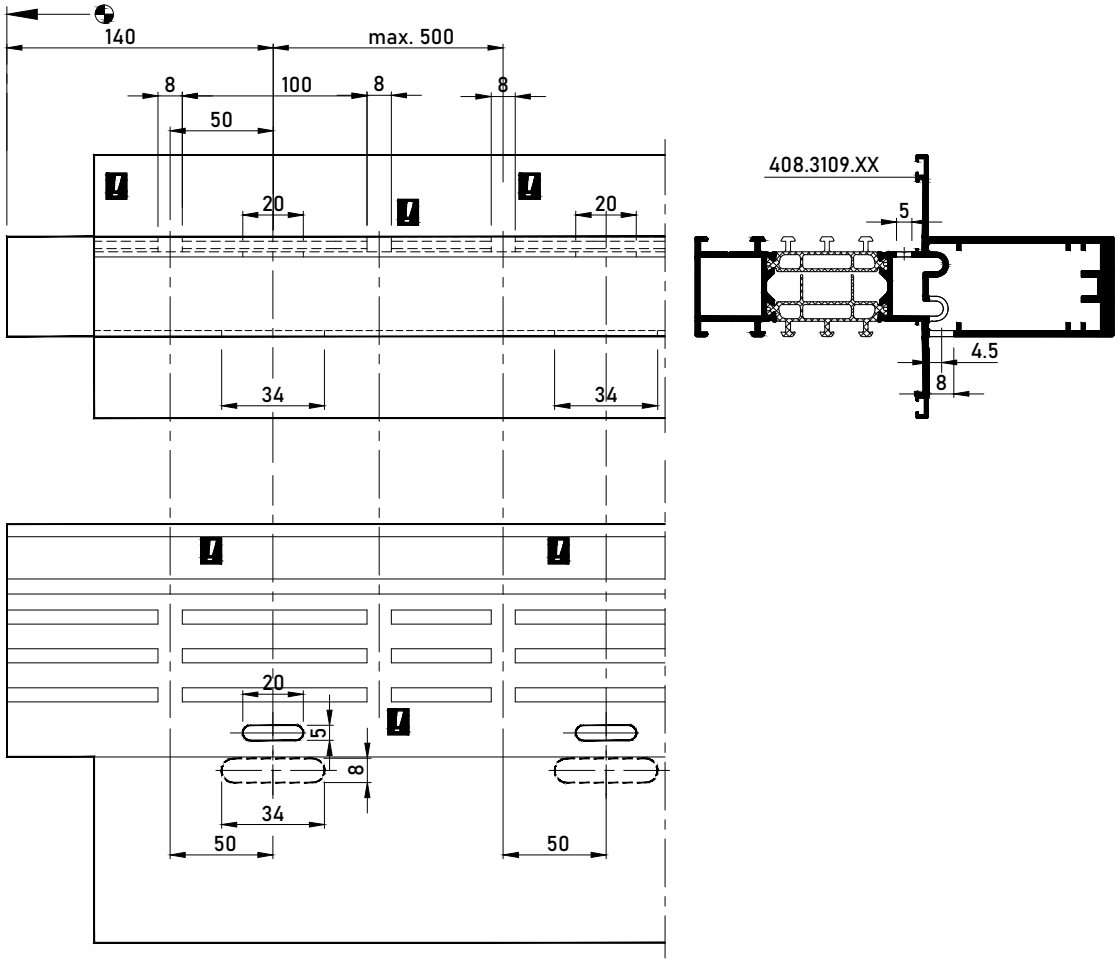

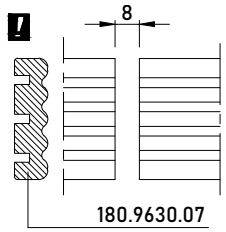
8
180.9630.07

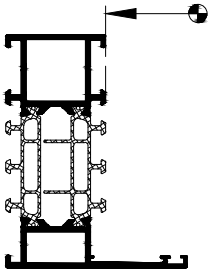

X DICHTINGSMIDDEL
MATIERE D'ETANCHEITE
SEALING AGENT
ABDICHTUNG

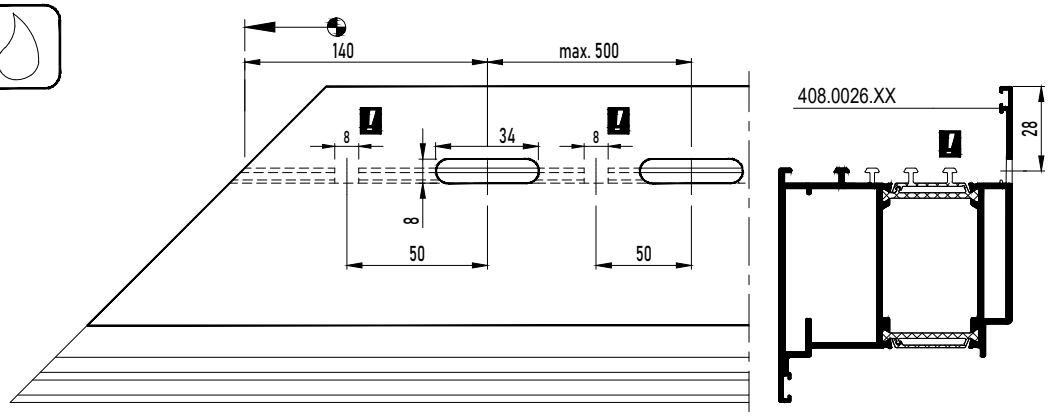


X
DICHTINGSMIDDEL
MATIERE D'ETANCHEITE
SEALING AGENT
ABDICHTUNG

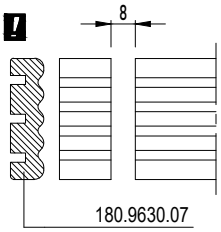
8
180.9630.07

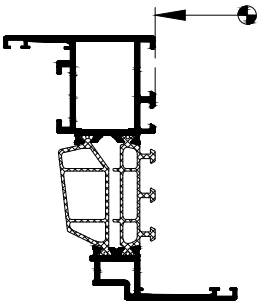

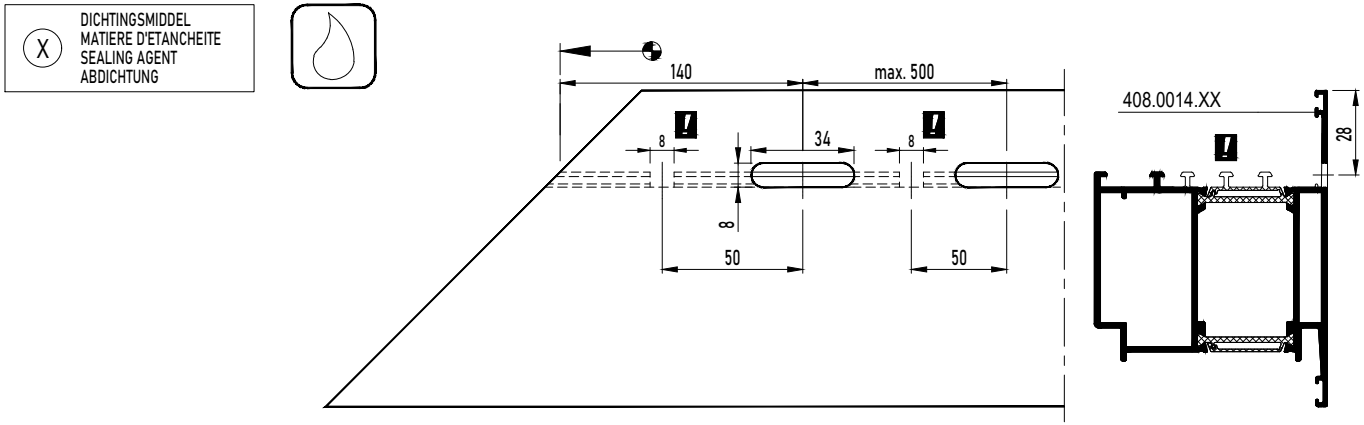
X
DICHTINGSMIDDEL
MATIERE D'ETANCHEITE
SEALING AGENT
ABDICHTUNG
140
max. 500
8
34
8
8
50
50
408.0014.XX
28


X
DICHTINGSMIDDEL
MATIERE D'ETANCHEITE
SEALING AGENT
ABDICHTUNG

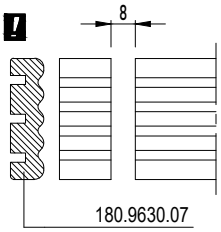
8
180.9630.07

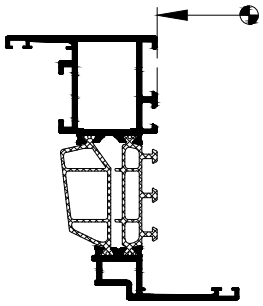

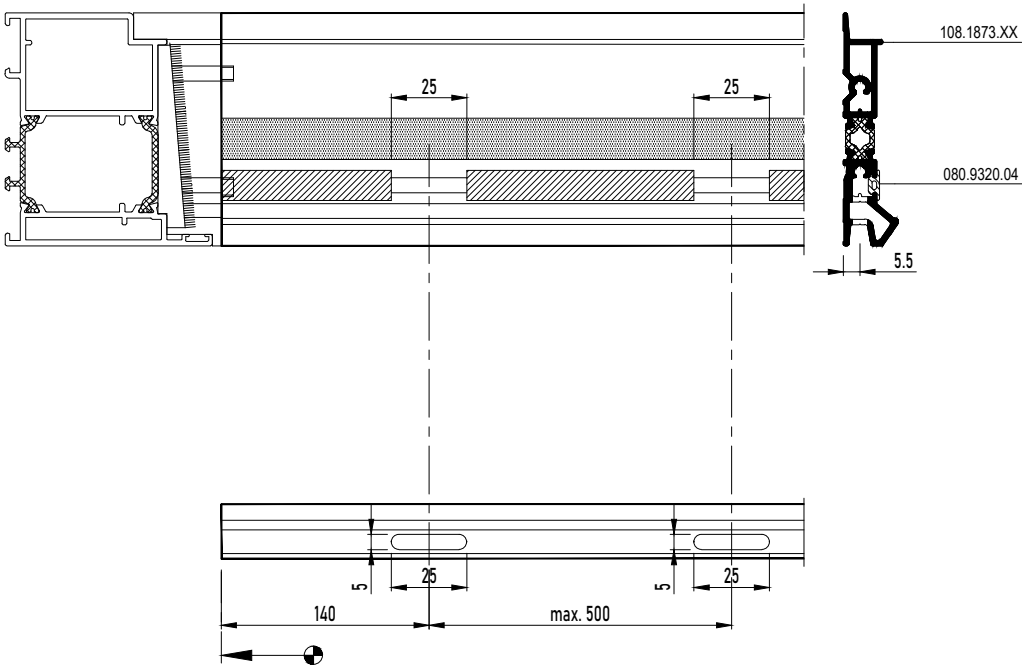
108.1873.XX
080.9320.04
25
25
5.5
5
25
5
25
140
max. 500

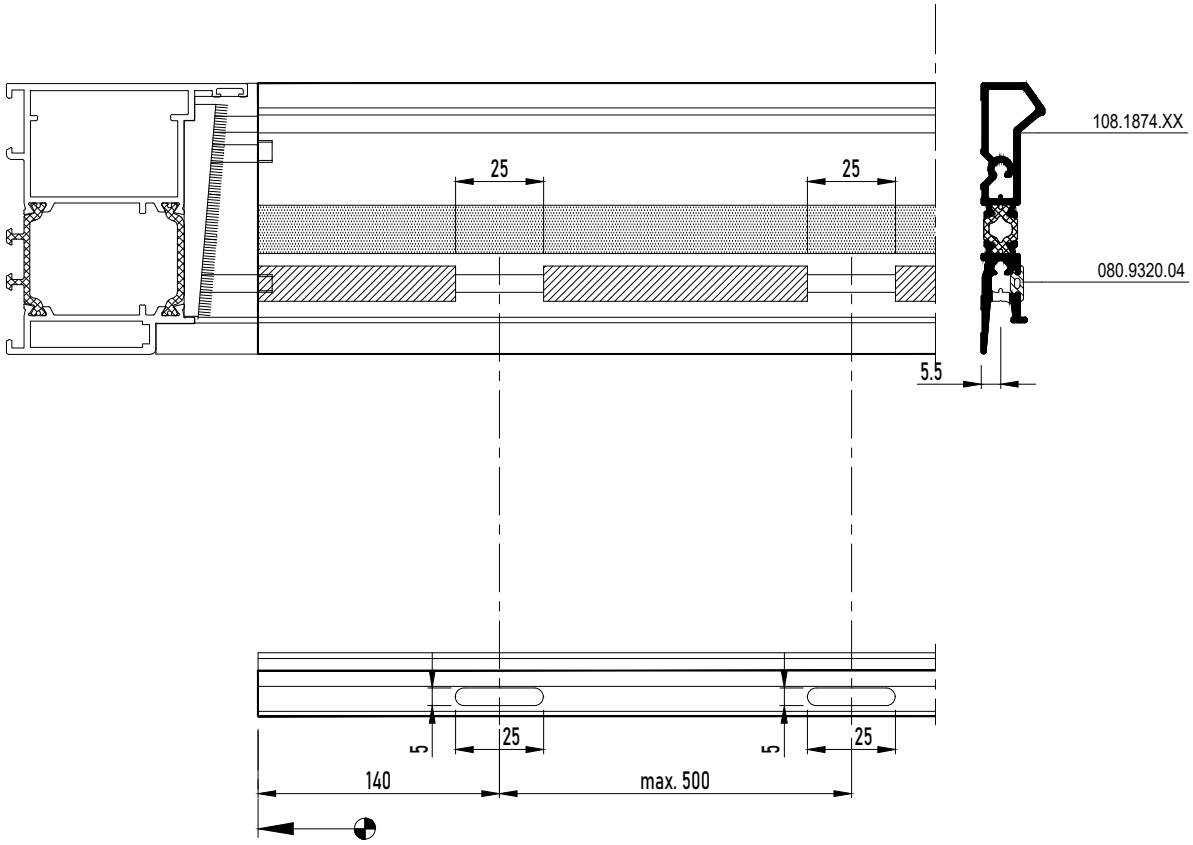
108.1874.XX
080.9320.04
25
25
5.5
5
25
5
25
140
max. 500

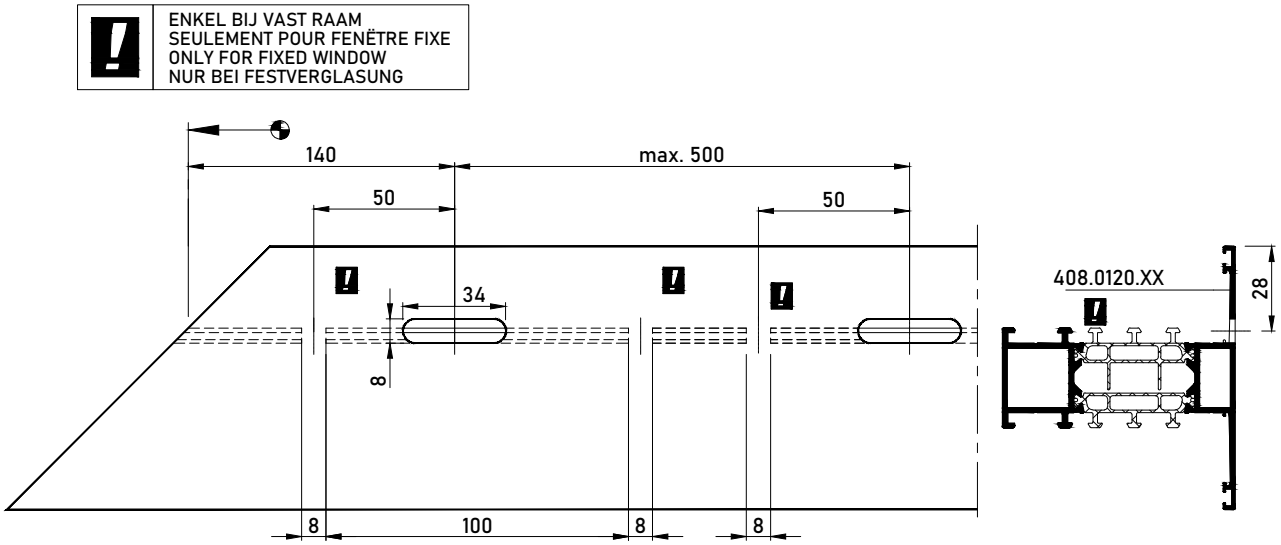
ENKEL BIJ VAST RAAM
SEULEMENT POUR FENÊTRE FIXE
ONLY FOR FIXED WINDOW
NUR BEI FESTVERGLASUNG
140
max. 500
50
50
34
8
408.0120.XX
28
8
100
8
8

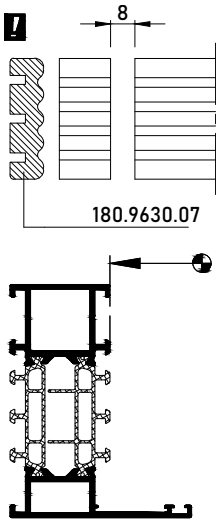
8
180.9630.07

DRAINAGE MFPT

DRAINAGE FRAME | 097.0183.00

MASTERLINE 8-Fu

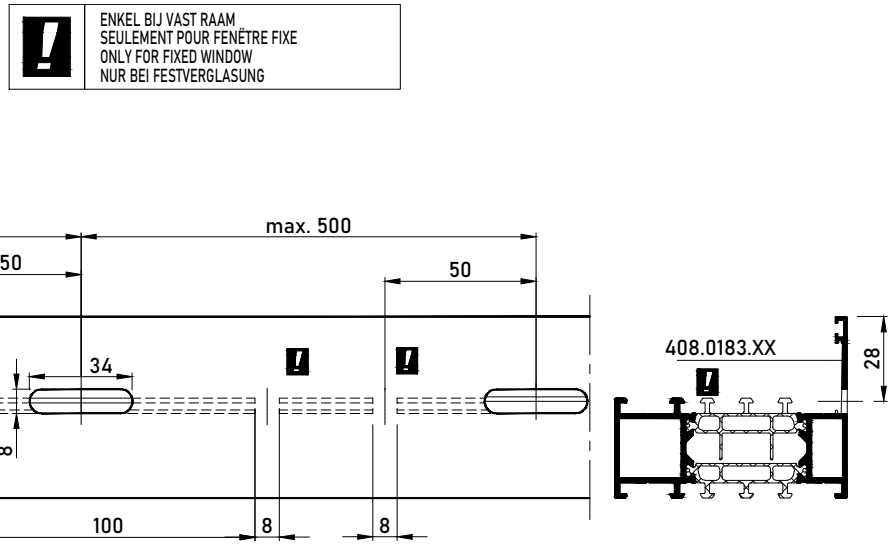

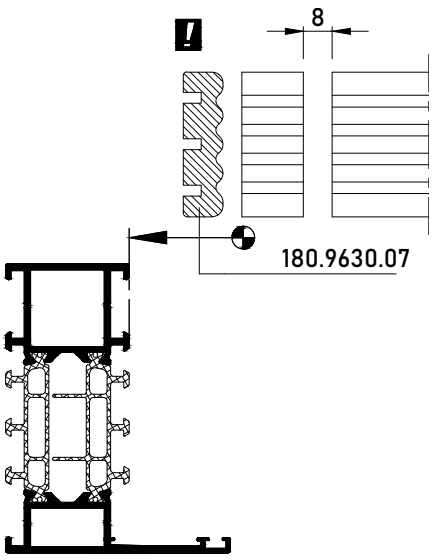
8
180.9630.07

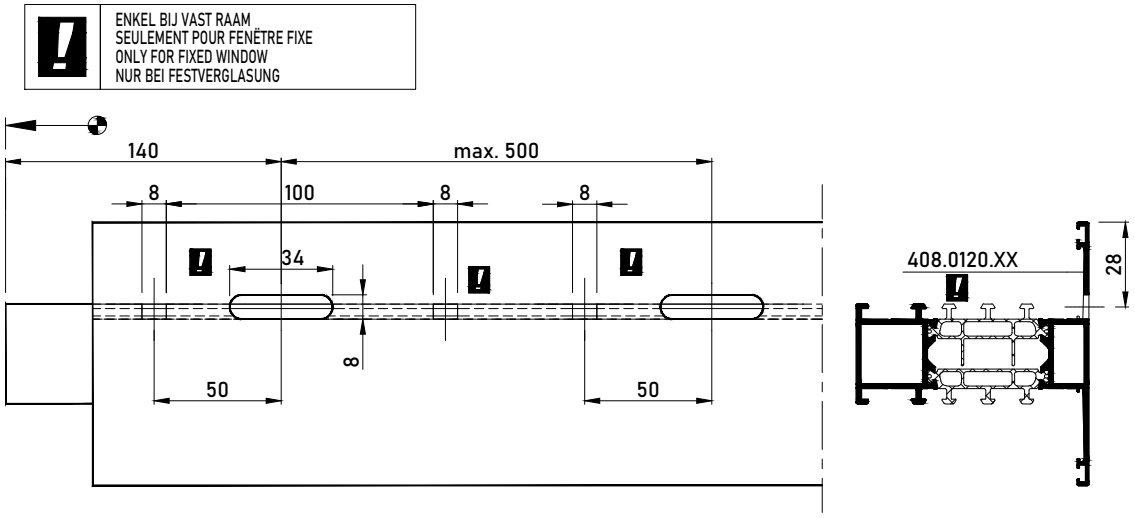
ENKEL BIJ VAST RAAM
SEULEMENT POUR FENÊTRE FIXE
ONLY FOR FIXED WINDOW
NUR BEI FESTVERGLASUNG
140
max. 500
8
100
8
8
34
8
50
50
408.0120.XX
28

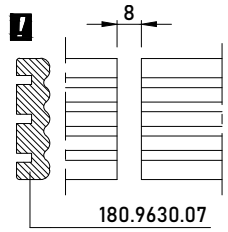
8
180.9630.07

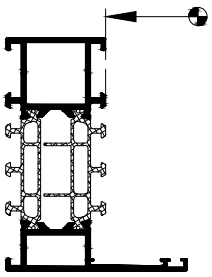

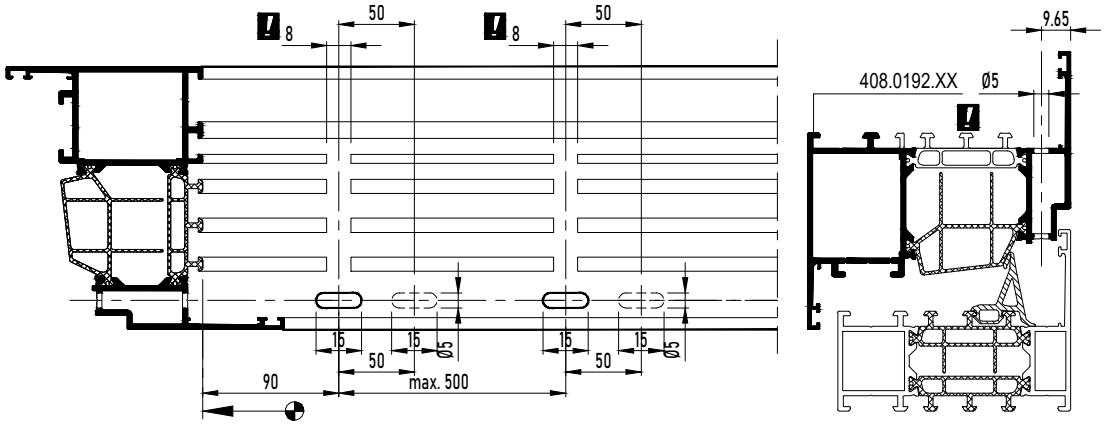
8
50
8
50
15
15
Ø5
15
15
Ø5
50
50
90
max. 500
9.65
408.0192.XX
Ø5

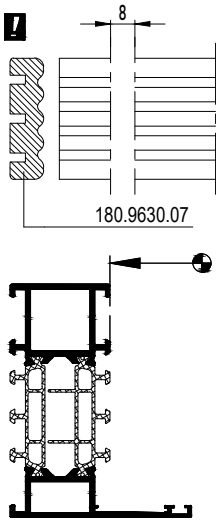
8
180.9630.07

MONTAGEVOLGORDE
L 'ORDRE DE MONTAGE
THE ORDER OF ASSEMBLY
MONTAGEREIHENFOLGE

1 2 3 .

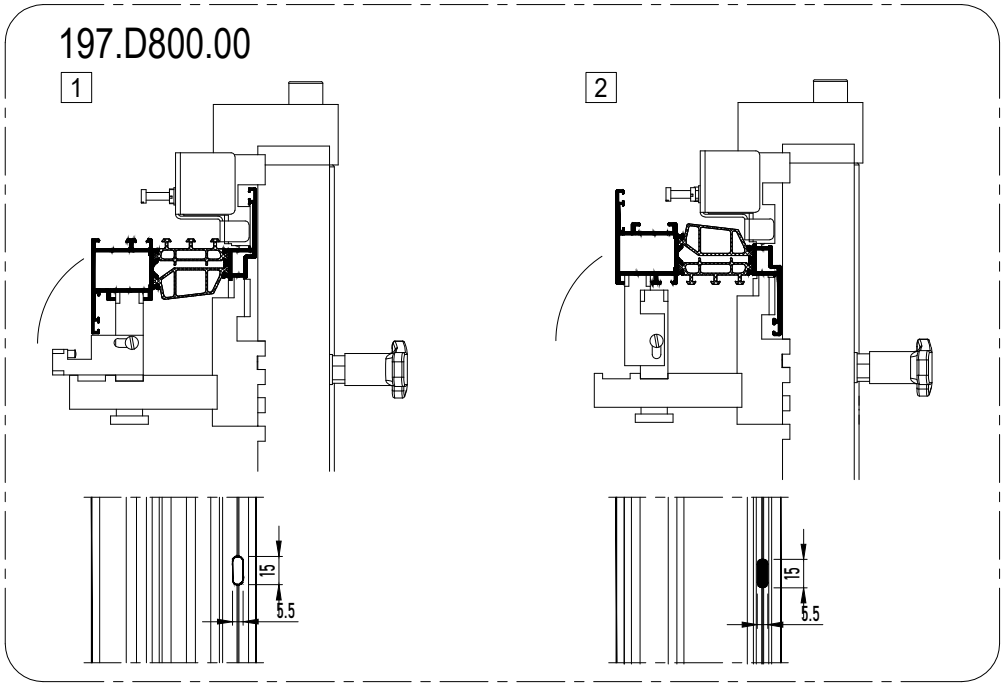

DRAINAGE MFPT

DRAINAGE VENT FLUSH DOOR | 097.0183.00

MASTERLINE 8-Fu

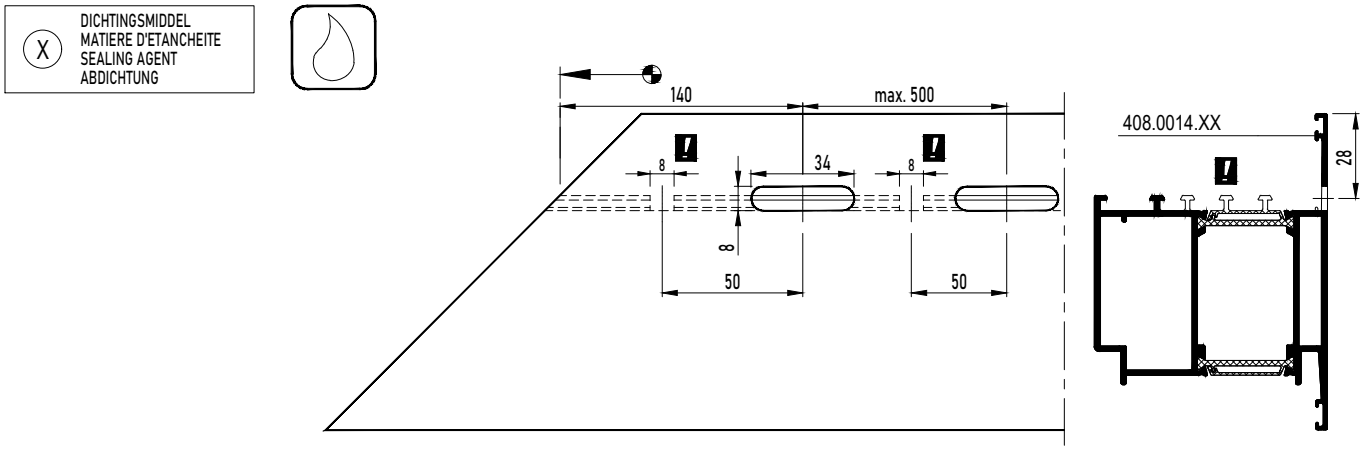


X
DICHTINGSMIDDEL
MATIERE D'ETANCHEITE
SEALING AGENT
ABDICHTUNG

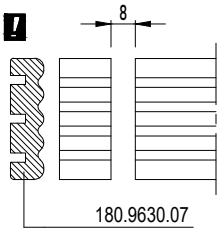
8
180.9630.07

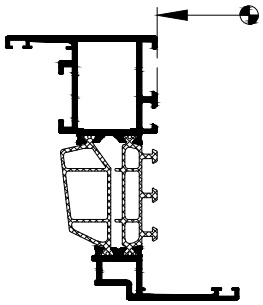

DRAINAGE MFPT

DRAINAGE VENT FLUSH DOOR | 097.0183.00

MASTERLINE 8-Fu

X DICHTINGSMIDDEL
MATIERE D'ETANCHEITE
SEALING AGENT
ABDICHTUNG

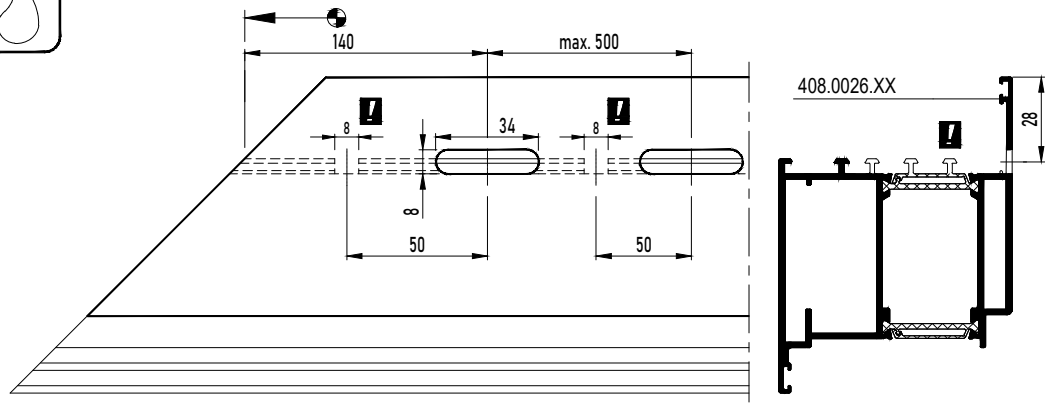

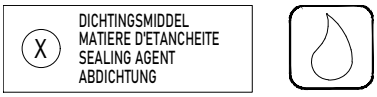
X
DICHTINGSMIDDEL
MATIERE D'ETANCHEITE
SEALING AGENT
ABDICHTUNG

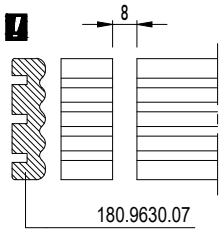
8
180.9630.07

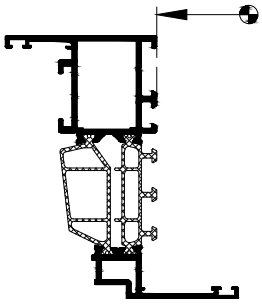

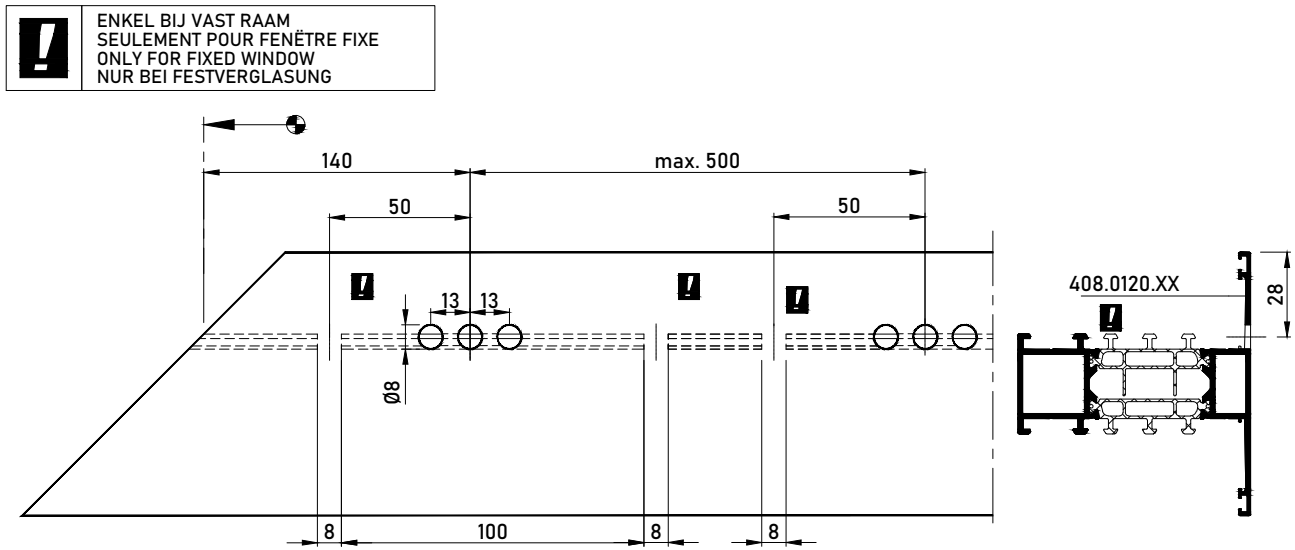
ENKEL BIJ VAST RAAM
SEULEMENT POUR FENËTRE FIXE
ONLY FOR FIXED WINDOW
NUR BEI FESTVERGLASUNG
140
max. 500
50
50
13
13
Ø8
408.0120.XX
28
8
100
8
8

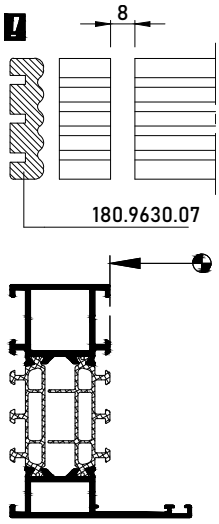
8
180.9630.07

ENKEL BIJ VAST RAAM
SEULEMENT POUR FENËTRE FIXE
ONLY FOR FIXED WINDOW
NUR BEI FESTVERGLASUNG

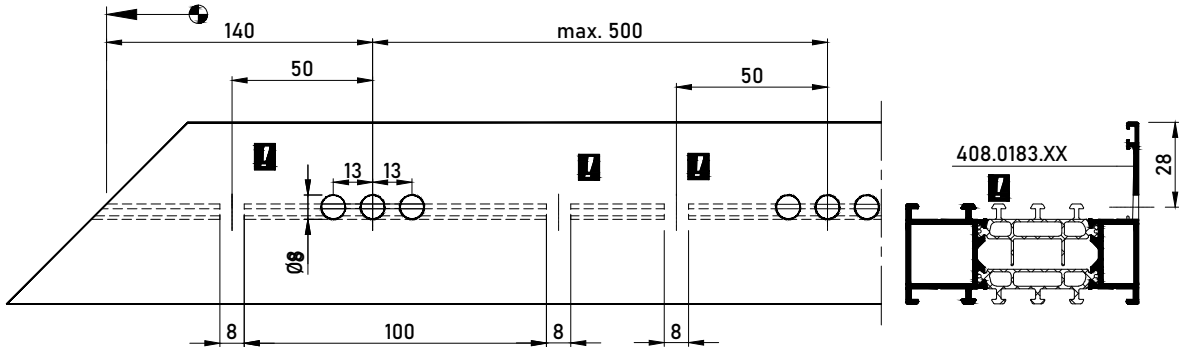

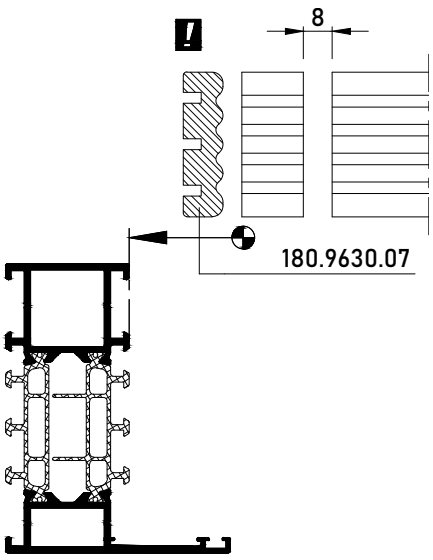
8
180.9630.07

DRAINAGE JIG

DRAINAGE TRANSOM-MULLION

MASTERLINE 8-Fu

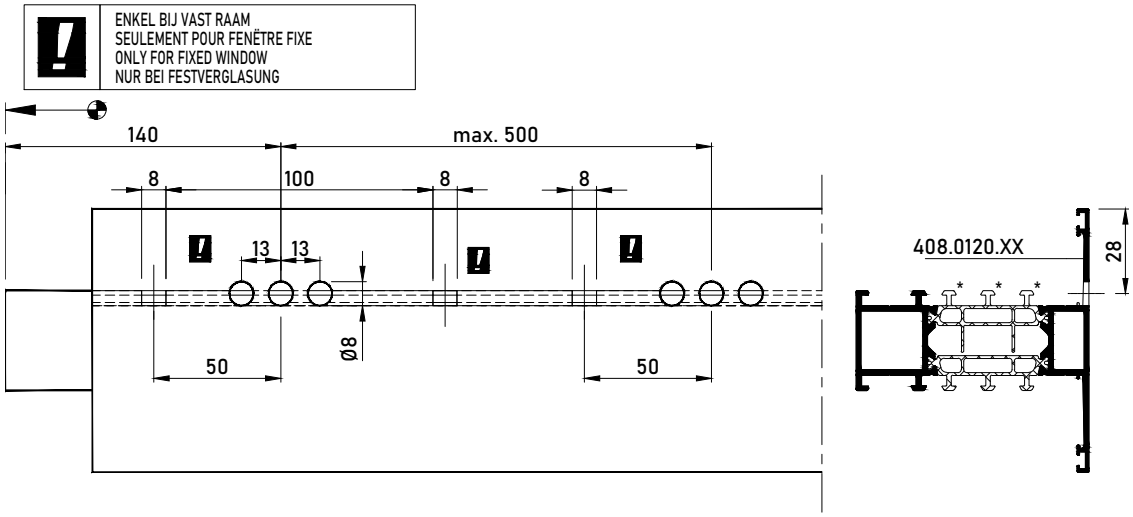

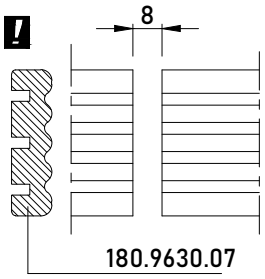
8
180.9630.07

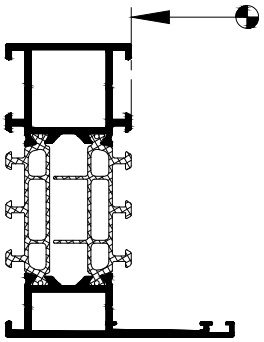

DRAINAGE JIG

DRAINAGE VENT FLUSH DOOR

MASTERLINE 8-Fu

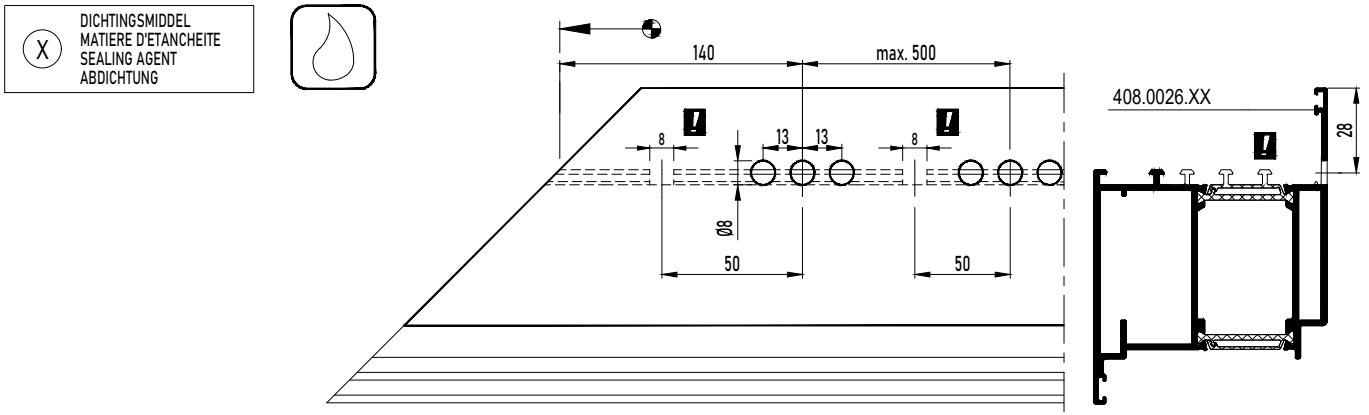


X
DICHTINGSMIDDEL
MATIERE D'ETANCHEITE
SEALING AGENT
ABDICHTUNG

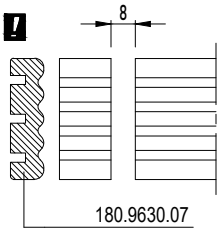
8
180.9630.07

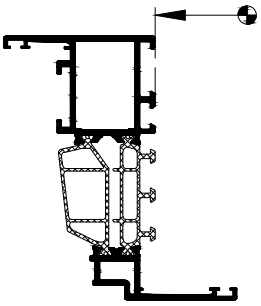

X DICHTINGSMIDDEL
MATIERE D'ETANCHEITE
SEALING AGENT
ABDICHTUNG

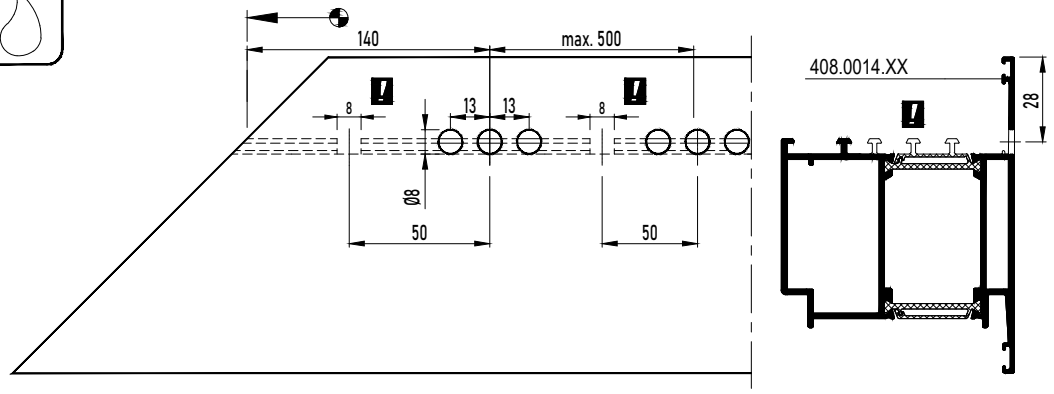


X
DICHTINGSMIDDEL
MATIERE D'ETANCHEITE
SEALING AGENT
ABDICHTUNG

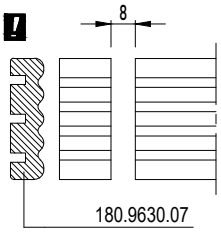
8
180.9630.07

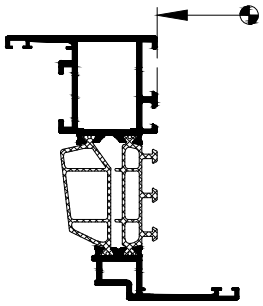

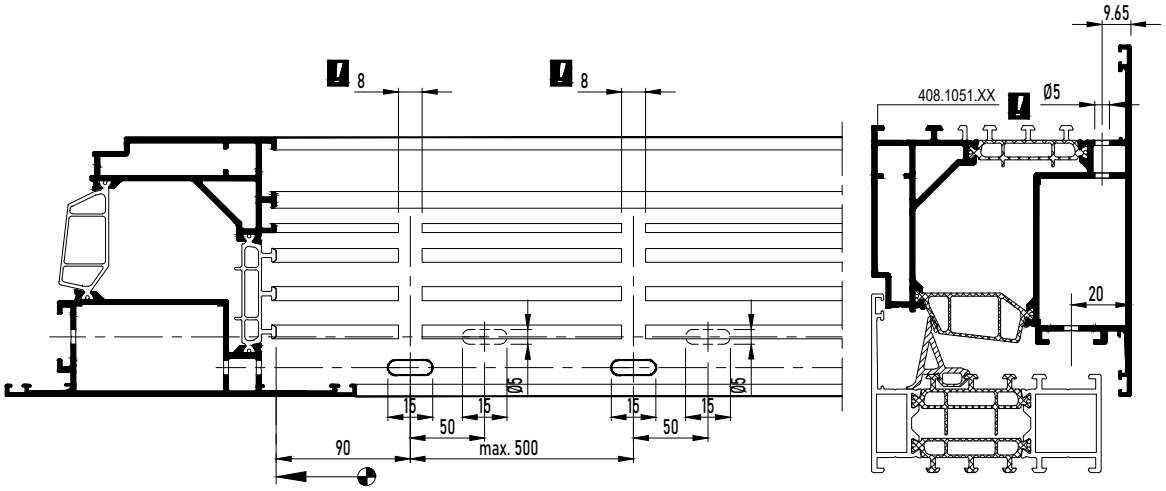
8
8
15
15
50
15
15
50
Ø5
Ø5
90
max. 500
9.65
408.1051.XX
Ø5
20

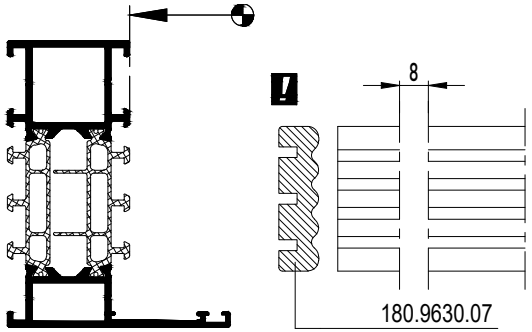
8
180.9630.07

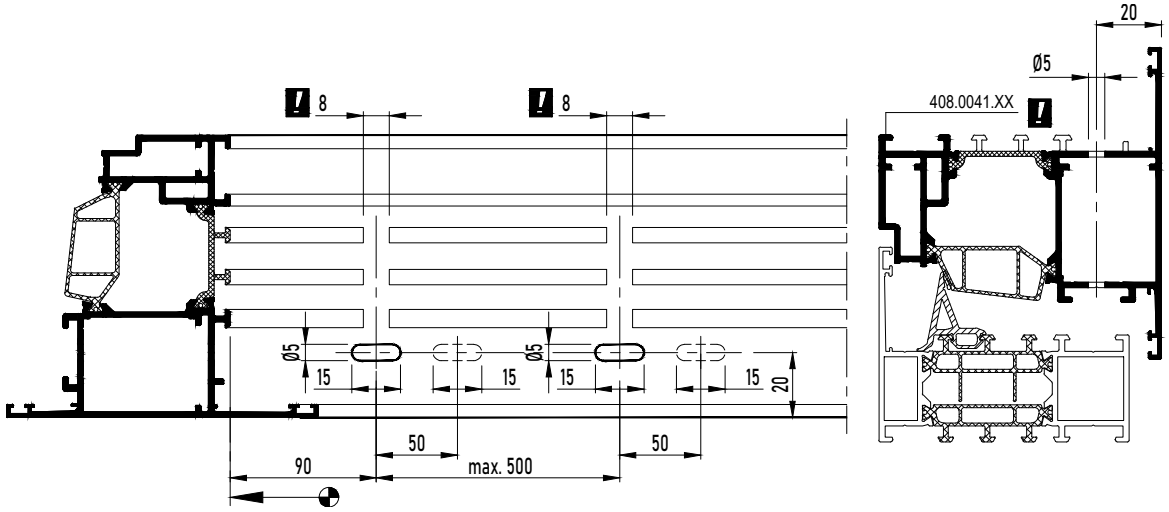
8
8
Ø5
Ø5
15
15
15
15
20
50
50
90
max. 500
20
Ø5
408.0041.XX

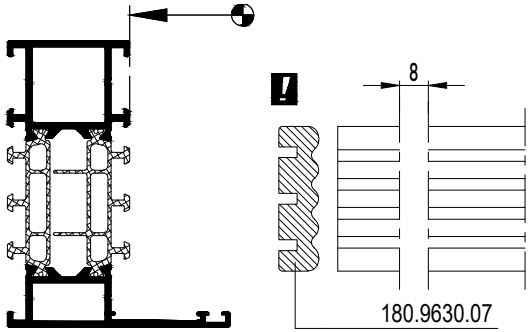
8
180.9630.07

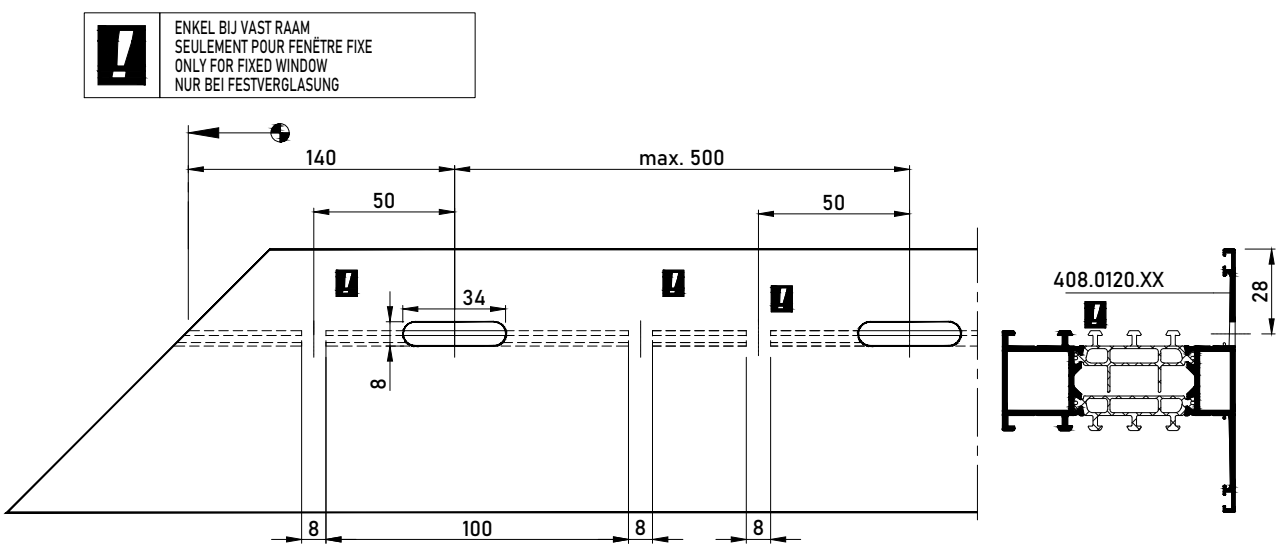
ENKEL BIJ VAST RAAM
SEULEMENT POUR FENÊTRE FIXE
ONLY FOR FIXED WINDOW
NUR BEI FESTVERGLASUNG
140
max. 500
50
50
34
8
8
100
8
8
408.0120.XX
28

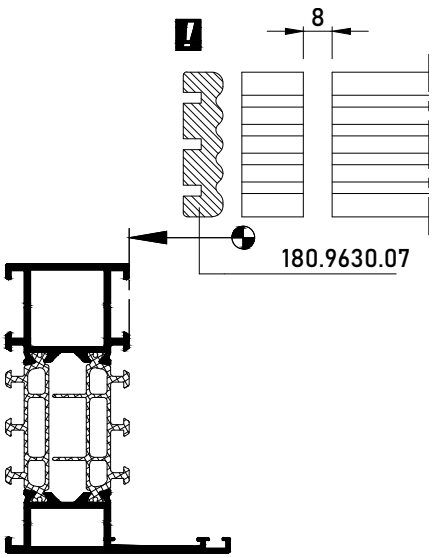
8
180.9630.07

ENKEL BIJ VAST RAAM
SEULEMENT POUR FENËTRE FIXE
ONLY FOR FIXED WINDOW
NUR BEI FESTVERGLASUNG

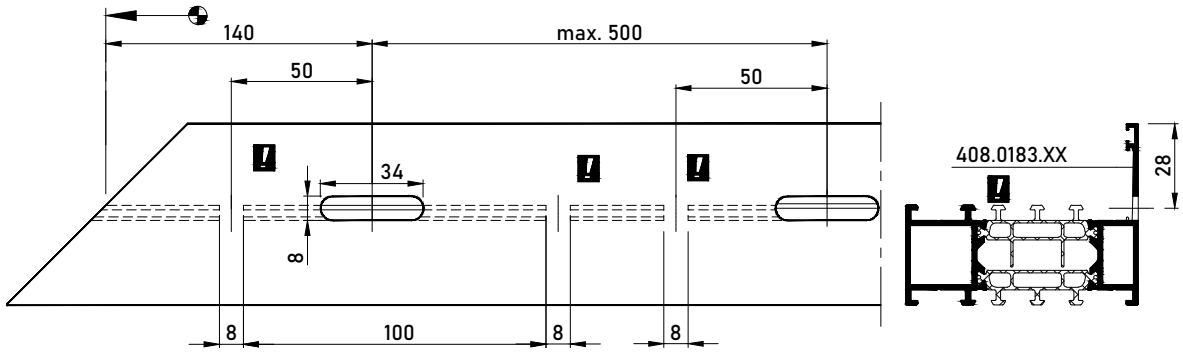

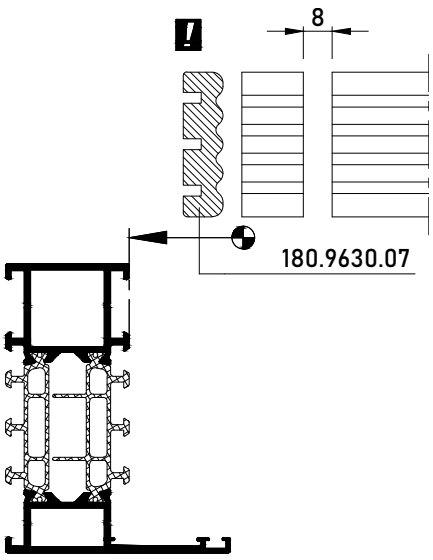
8
180.9630.07

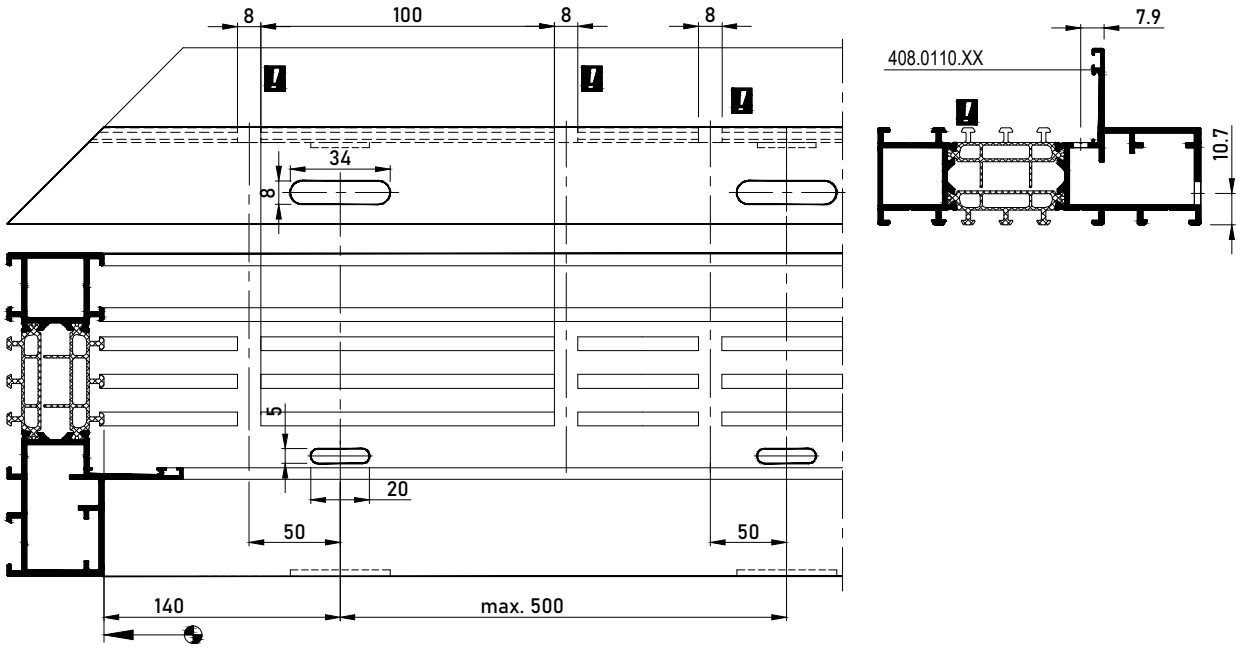
8
100
8
8
34
8
5
20
50
50
140
max. 500
7.9
408.0110.XX
10.7

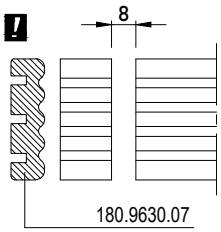
8
180.9630.07

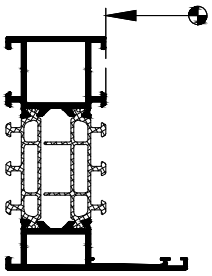

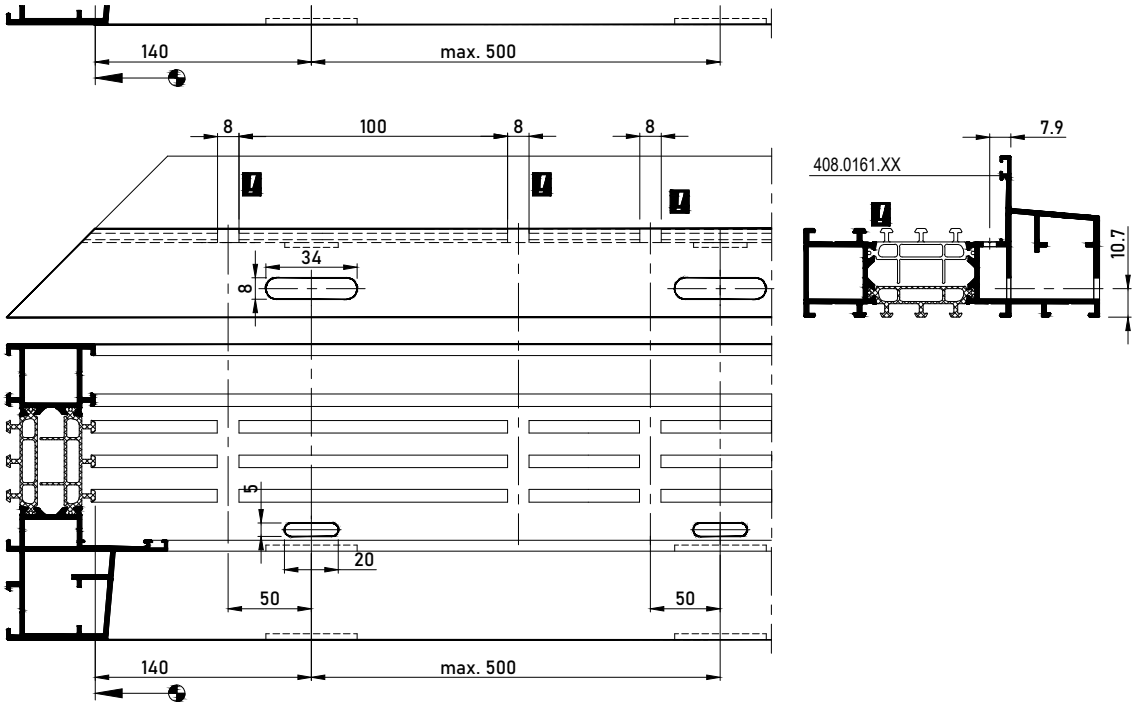
140
max. 500
8
100
8
8
34
8
5
20
50
50
140
max. 500
7.9
408.0161.XX
10.7

ENKEL BIJ VAST RAAM
SEULEMENT POUR FENËTRE FIXE
ONLY FOR FIXED WINDOW
NUR BEI FESTVERGLASUNG

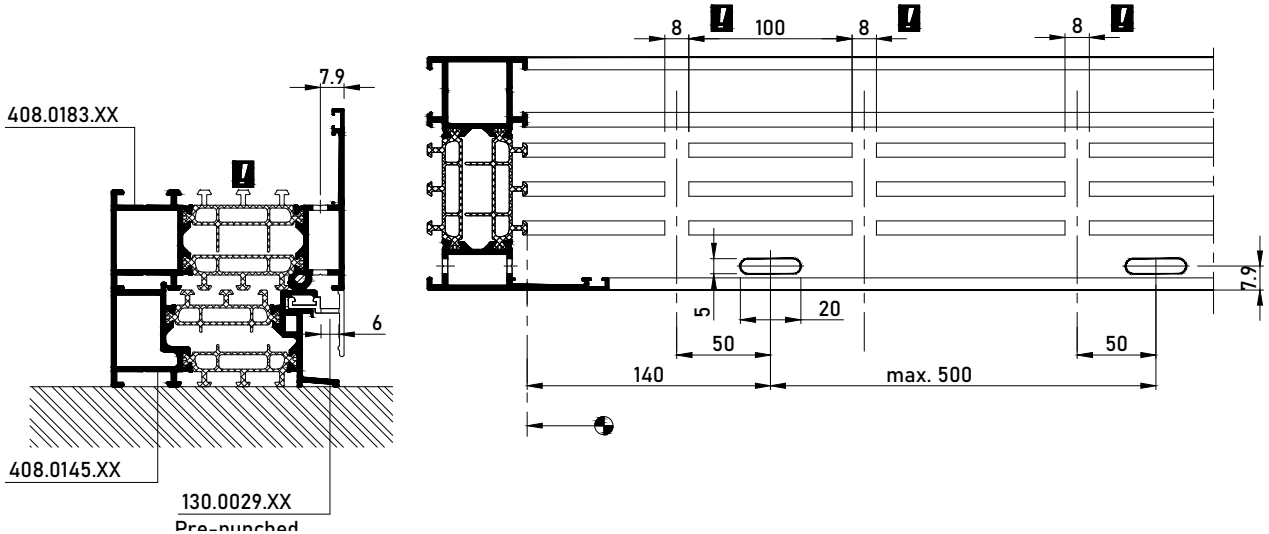

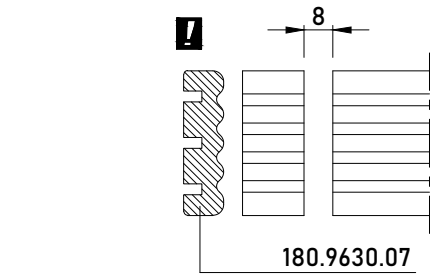
8
180.9630.07

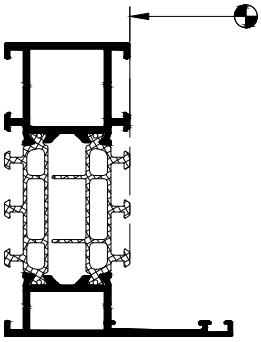

*

De uitfrezingen voor ontwatering van de glaslat dienen recht boven de ontwateringsgaten van de kader te gebeuren. Le poinçonnage pour le draingе de la parclose doit être positionné juste au-dessous des trous de drainage du dormant. The drilling for the glazing bead drainage must be done straight above the drainage holes of the outer frame. Die Ausfräsung für die Entwässerung der Glasleiste soll genau über den Entwässerungslöcher des Blendrahmens positioniert sein	! ENKEL BIJ VAST RAAM SEULEMENT POUR FENÊTRE FIXE ONLY FOR FIXED WINDOW NUR BEI FESTVERGLASUNG
	(X) DICHTINGSMIDDEL MATIERE D'ETANCHEITE SEALING AGENT ABDICHTUNG

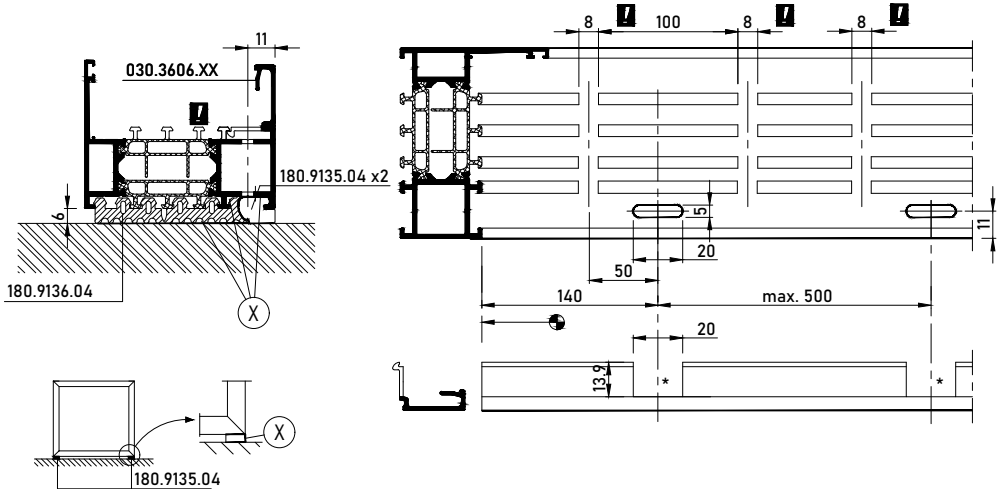

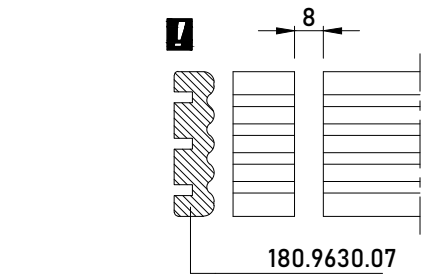
8
180.9630.07

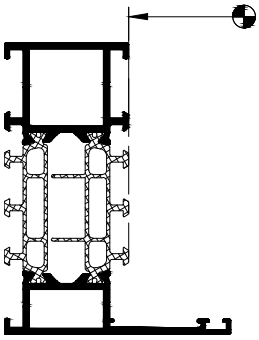

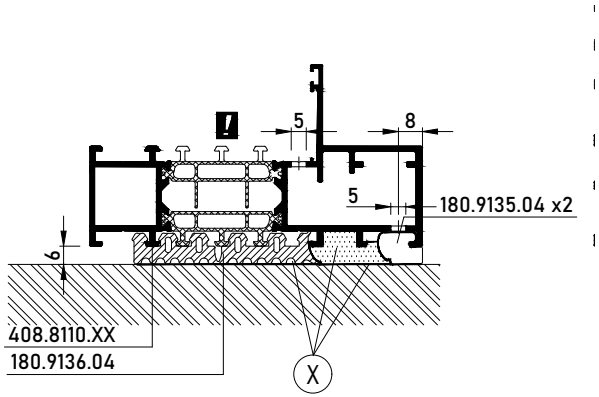

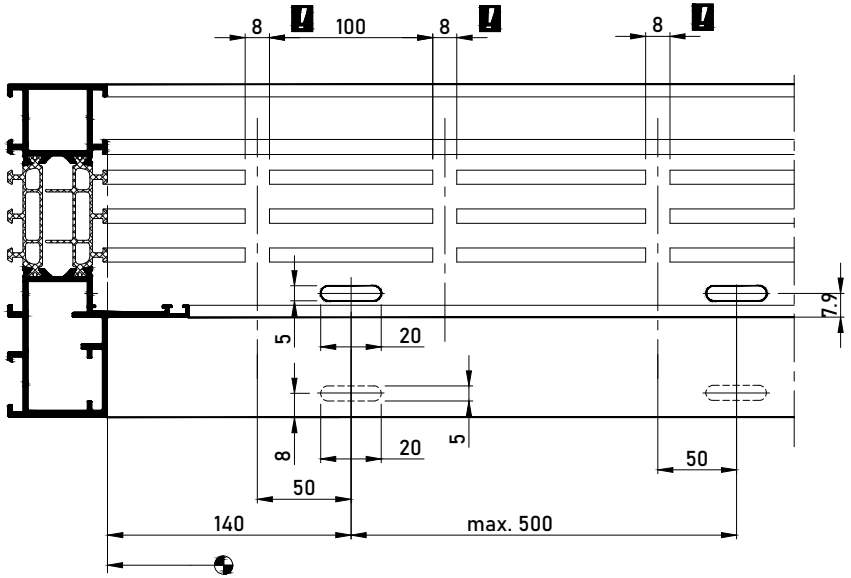

X DICHTINGSMIDDEL
MATIERE D'ETANCHEITE
SEALING AGENT
ABDICHTUNG

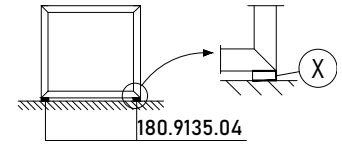
X
180.9135.04

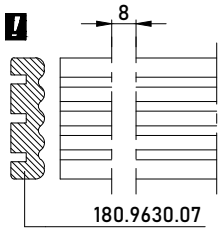
8
180.9630.07

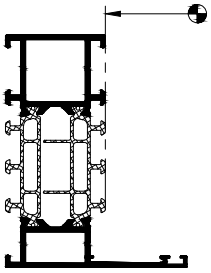

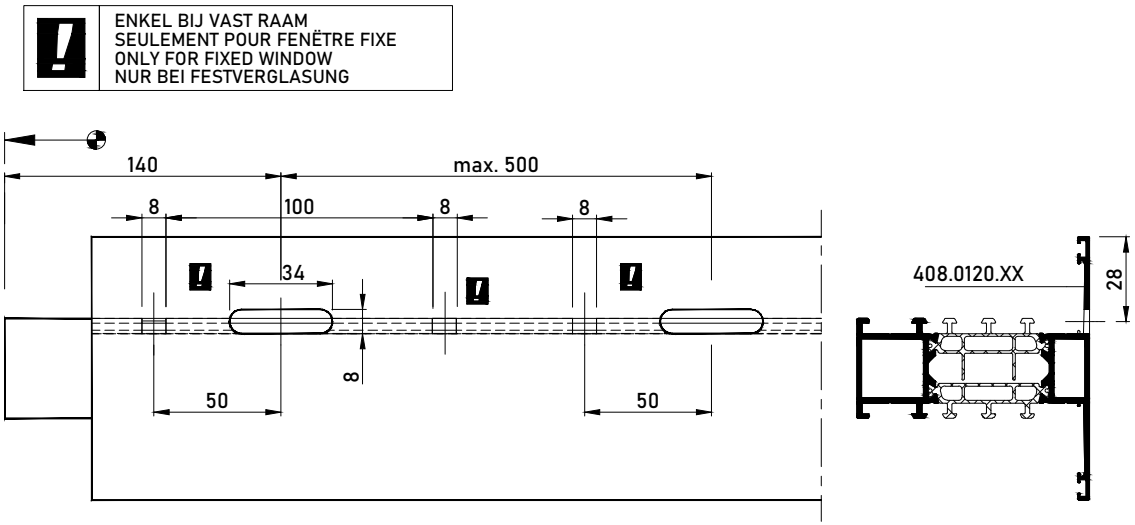
ENKEL BIJ VAST RAAM
SEULEMENT POUR FENÊTRE FIXE
ONLY FOR FIXED WINDOW
NUR BEI FESTVERGLASUNG
140
max. 500
8
100
8
8
34
8
50
50
408.0120.XX
28

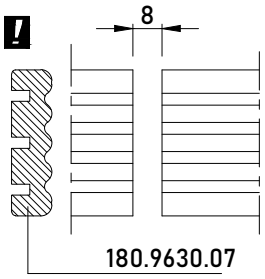
8
180.9630.07

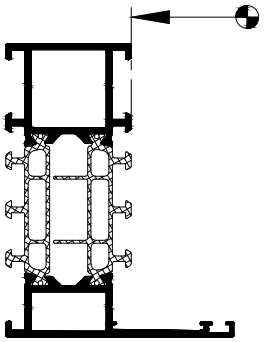

Ontwatering

VOLGORDE
1. Correct ponsen, boren of frezen
2. Ontbramen (Indien noodzakelijk)
3. Stof en zaagresten verwijderen
4. Ontvetten met Degreaser, art. nr. 086.9210.--
5. Anticorrosieproduct aanbrengen, art. nr. 086.9208.--, 086.9225.--

Drainage

ORDRE
1. Poinçonnage, forage ou fraisage correct
2. Ebavurage (si nécessaire)
3. Enlèvement des poussières et des copeaux
4. Dégraissage avec Degreaser, art. nr. 086.9210.--
5. Application de produit anti-corrosion, art. nr. 086.9208.--, 086.9225.--

Drainage

SEQUENCE
1. Correct punching, drilling or milling
2. Deburring (if necessary)
3. Removing dust and saw-dust
4. Degreasing with Degreaser, art. nr. 086.9210.--
5. Applying anti-corrosion product, art. nr. 086.9208.--, 086.9225.--

Entwässerung

REIHENFOLGE
1. Stanzen, bohren oder fräsen
2. Entgraten (falls erforderlich)
3. Staub und Sägereste entfernen
4. Entfetten mit Degreaser, art. nr. 086.9210.--
5. Korrosionsschutzprodukt aufbringen, art. nr. 086.9208.--, 086.9225.--

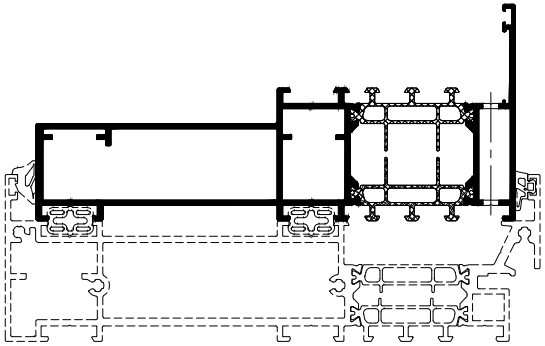

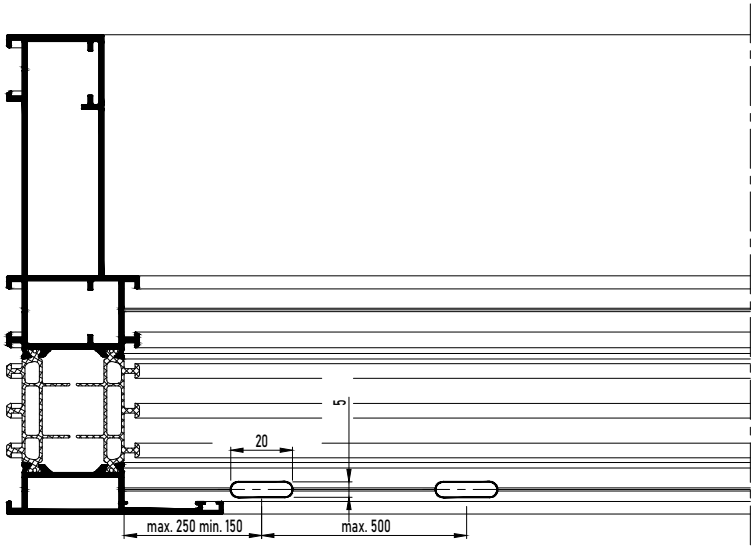

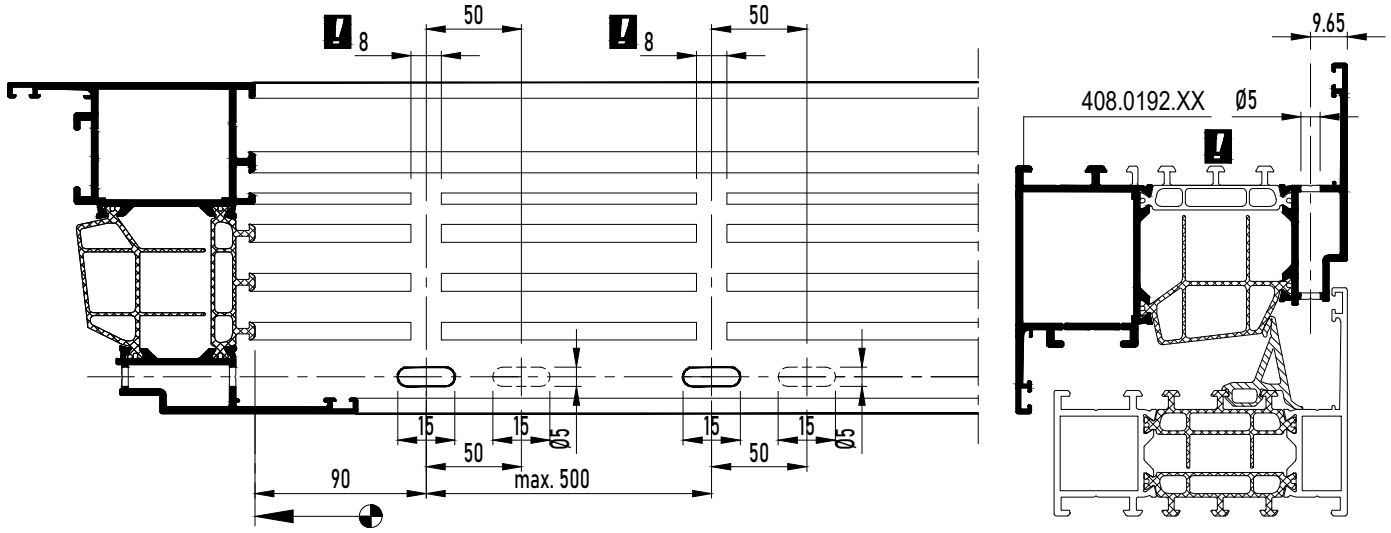
8
50
8
50
15
15
Ø5
15
15
Ø5
50
50
90
max. 500
9.65
408.0192.XX
Ø5

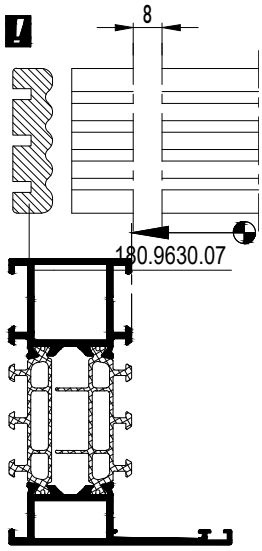
8
180.9630.07

X DICHTINGSMIDDEL
MATIERE D'ETANCHEITE
SEALING AGENT
ABDICHTUNG

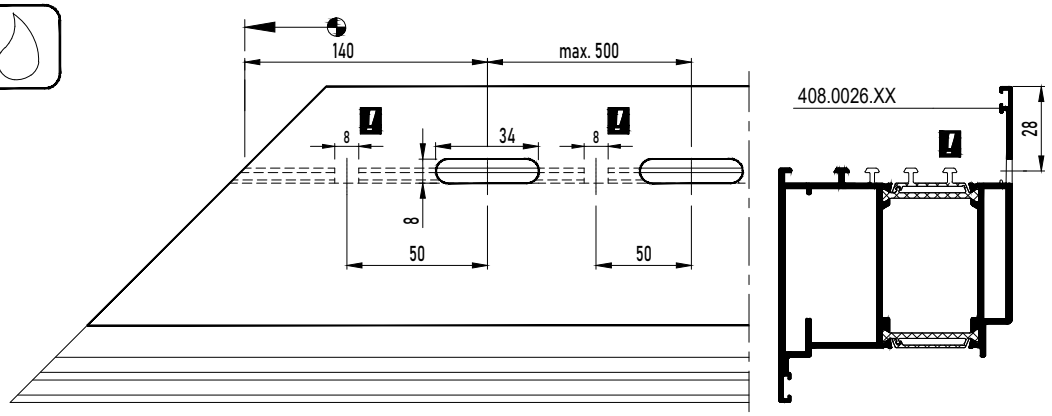


X
DICHTINGSMIDDEL
MATIERE D'ETANCHEITE
SEALING AGENT
ABDICHTUNG

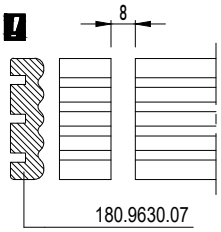
8
180.9630.07

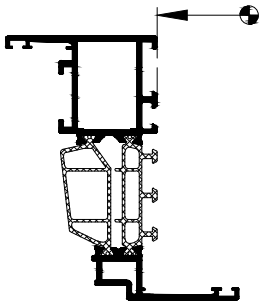

X DICHTINGSMIDDEL
MATIERE D'ETANCHEITE
SEALING AGENT
ABDICHTUNG

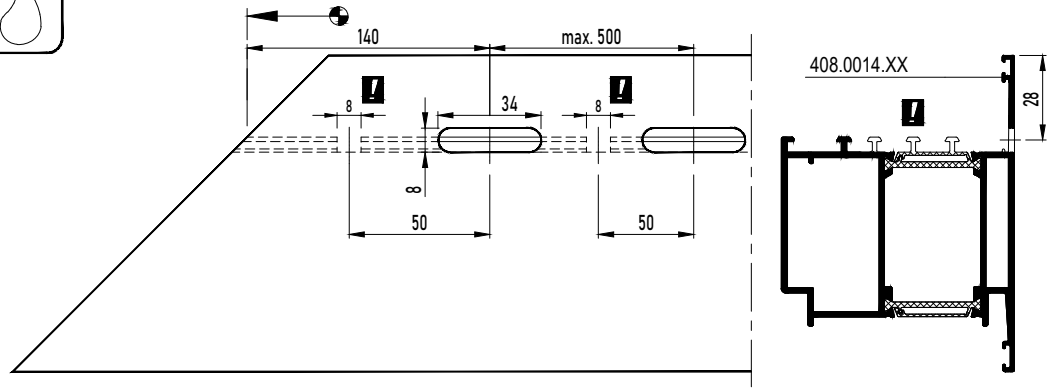


X
DICHTINGSMIDDEL
MATIERE D'ETANCHEITE
SEALING AGENT
ABDICHTUNG

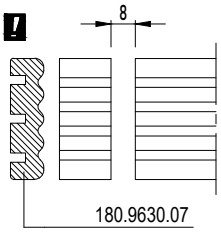
8
180.9630.07

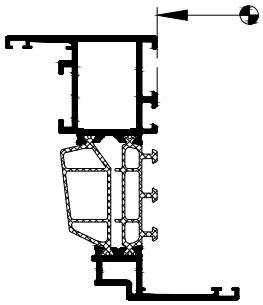

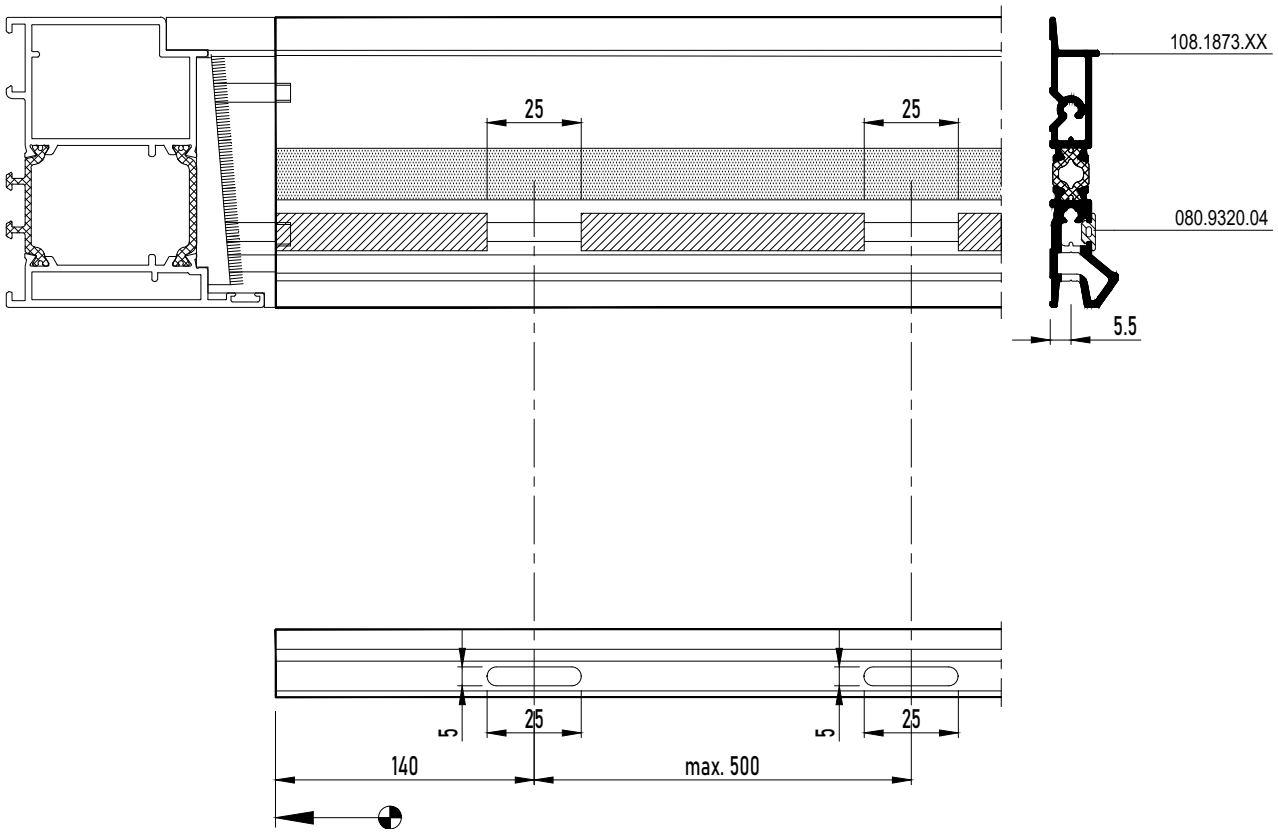
25
25
108.1873.XX
080.9320.04
5.5
5
25
5
25
140
max. 500

DRAINAGE CR

DRAINAGE FLOOR PROFILE FLUSH DOOR

MASTERLINE 8-Fu

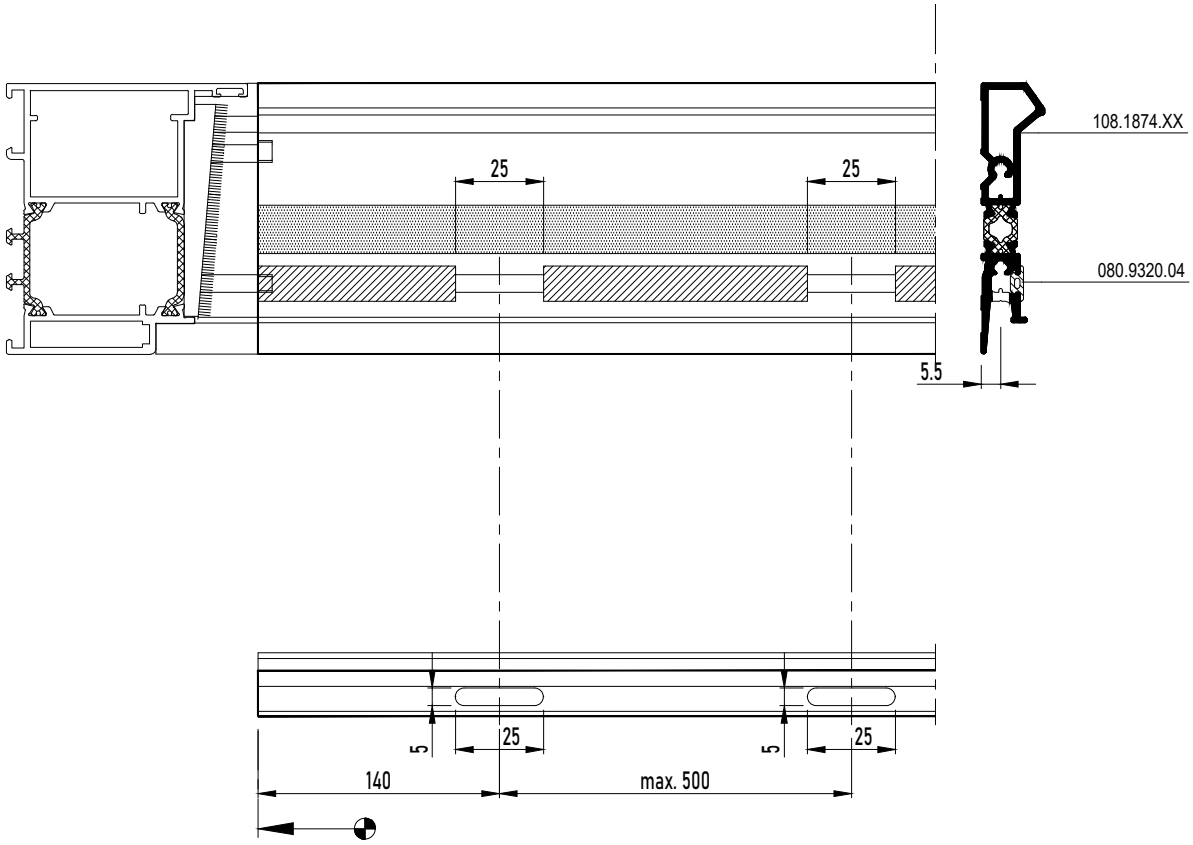

DRAINAGE MC HIDDEN

HIDDEN DRAINAGE FRAME Re - De - DRAINAGE PIECE 4MM

MASTERLINE 8-De, MASTERLINE 8-Re

ENKEL BIJ VAST RAAM SEULEMENT POUR FENËTRE FIXE ONLY FOR FIXED WINDOW NUR BEI FESTVERGLASUNG	(X) DICHTINGSMIDDEL MATIERE D'ETANCHEITE SEALING AGENT ABDICHTUNG

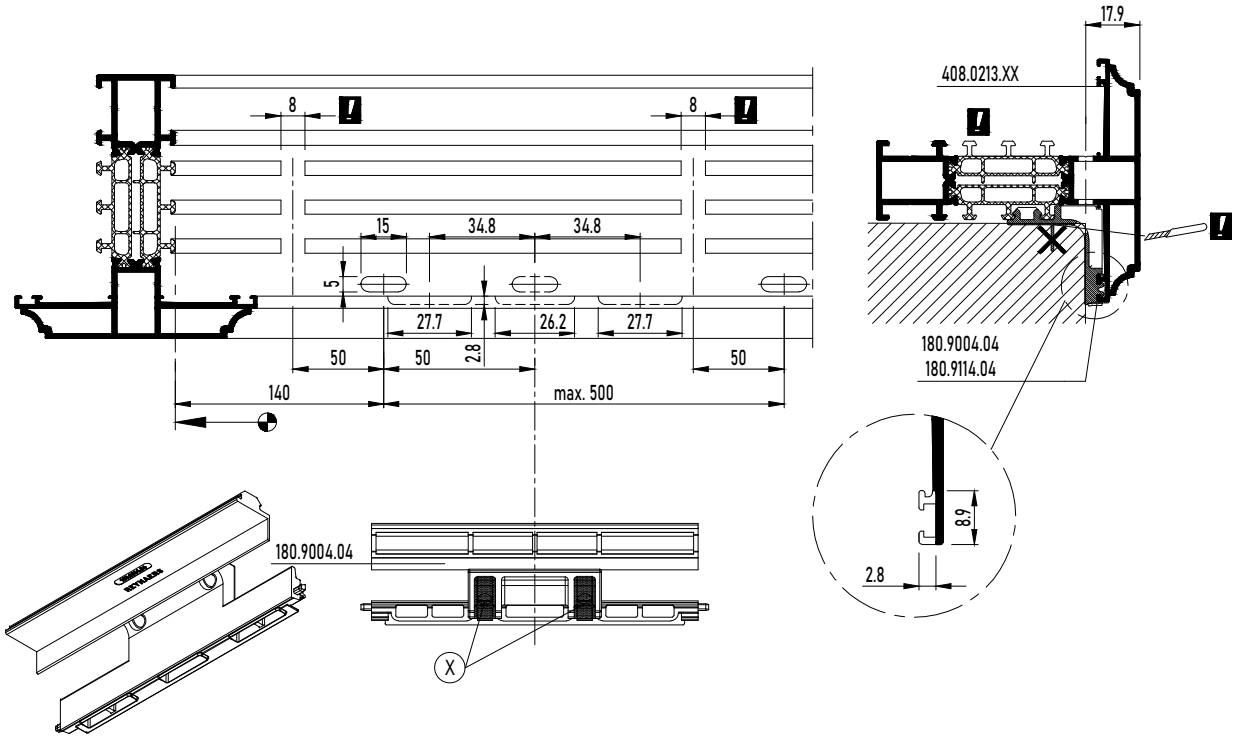

DRAINAGE MC HIDDEN

HIDDEN DRAINAGE FRAME Re - De - DRAINAGE PIECE 4MM

MASTERLINE 8-De, MASTERLINE 8-Re

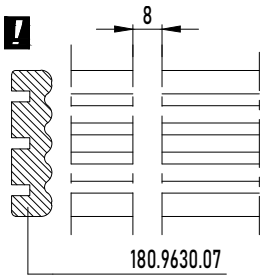

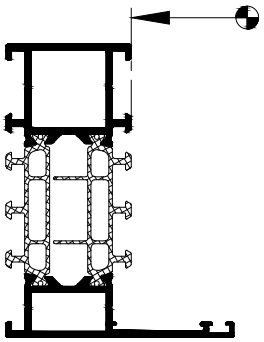

DRAINAGE MC HIDDEN

HIDDEN DRAINAGE FRAME Re - De - DRAINAGE PIECE 8MM

MASTERLINE 8-De, MASTERLINE 8-Re

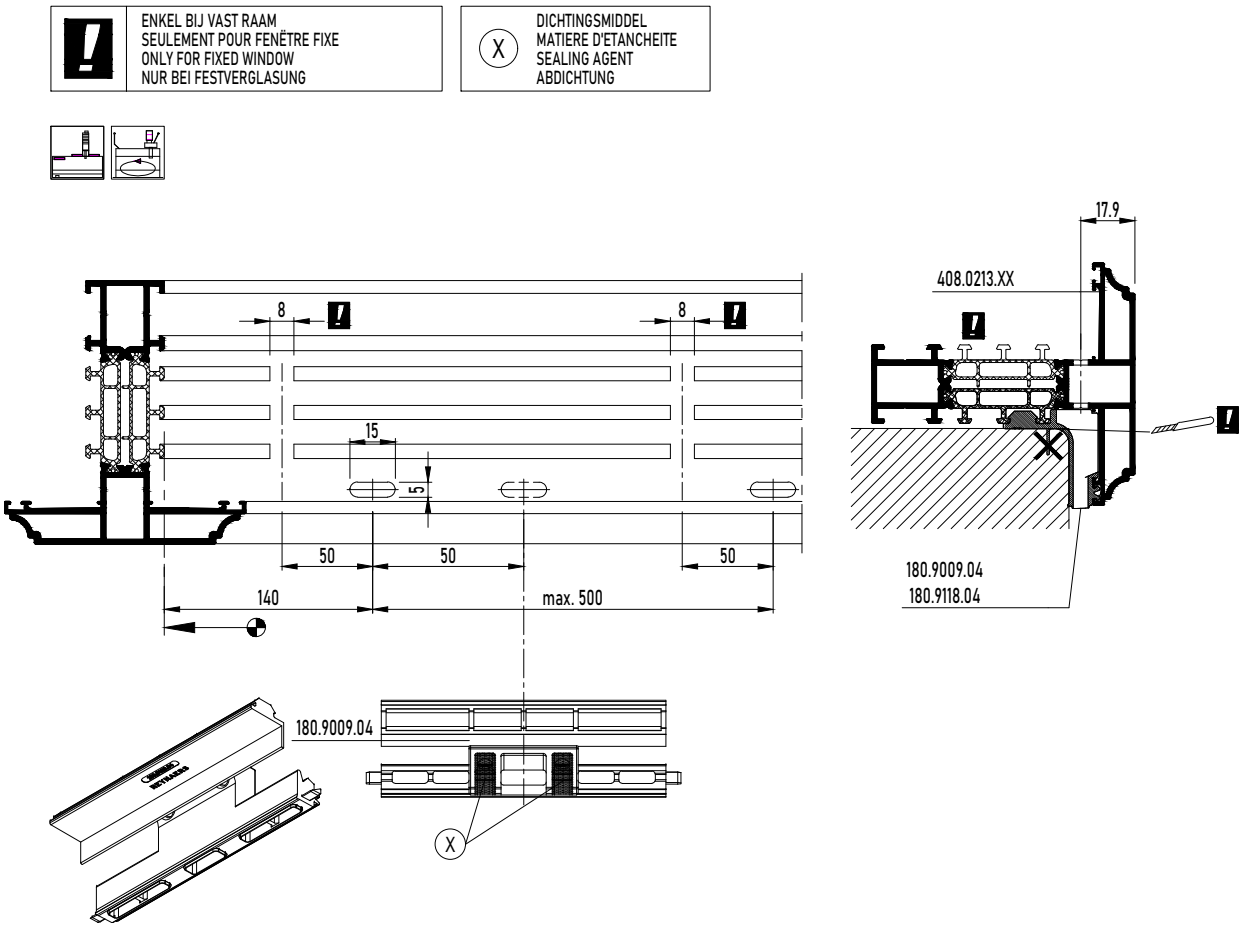

DRAINAGE MC HIDDEN

HIDDEN DRAINAGE FRAME Re - De - DRAINAGE PIECE 8MM

MASTERLINE 8-De, MASTERLINE 8-Re

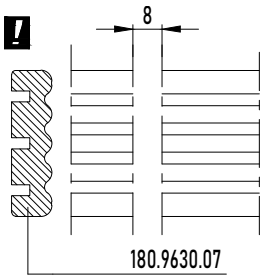

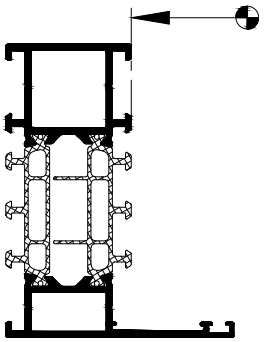

DRAINAGE MC HIDDEN

HIDDEN DRAINAGE FRAME Re - De - DRAINAGE PIECE 8MM

MASTERLINE 8-De, MASTERLINE 8-Re

ENKEL BIJ VAST RAAM SEULEMENT POUR FENËTRE FIXE ONLY FOR FIXED WINDOW NUR BEI FESTVERGLASUNG	DICHTINGSMIDDEL MATIERE D'ETANCHEITE SEALING AGENT ABDICHTUNG

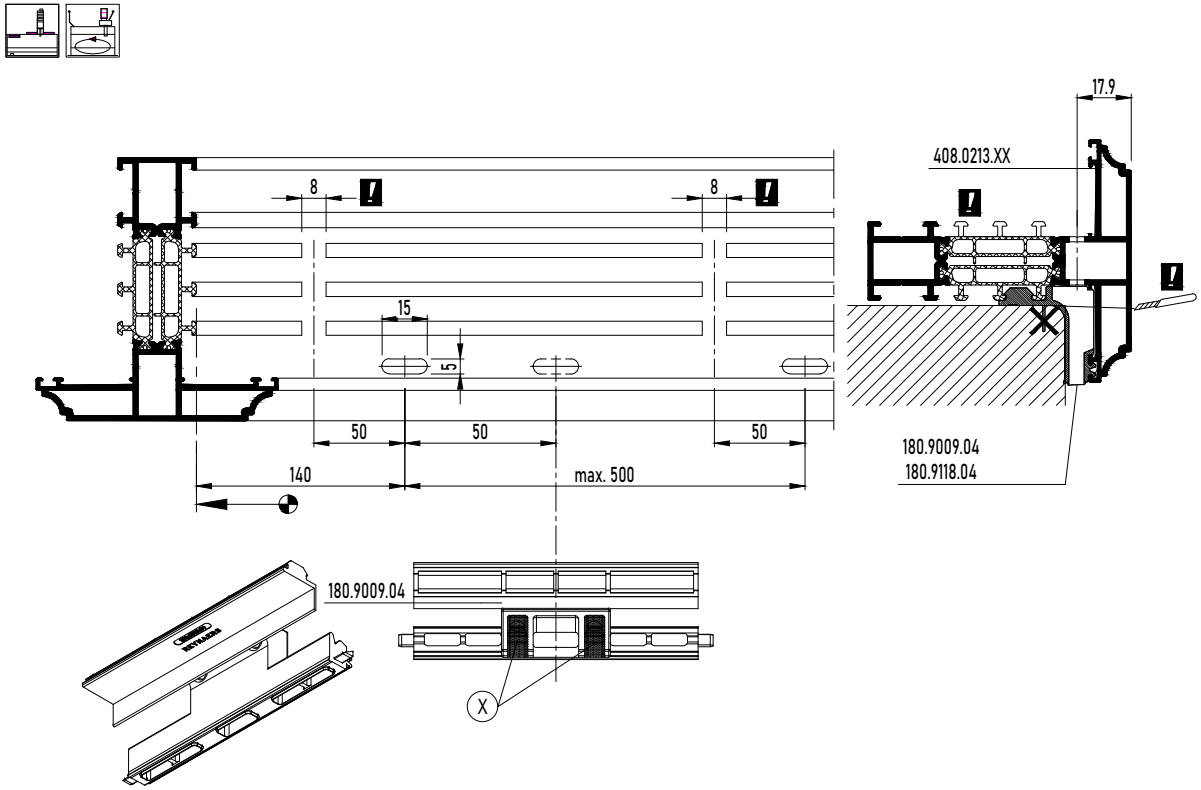

DRAINAGE MC HIDDEN

HIDDEN DRAINAGE FRAME Re - De - DRAINAGE PIECE 8MM

MASTERLINE 8-De, MASTERLINE 8-Re

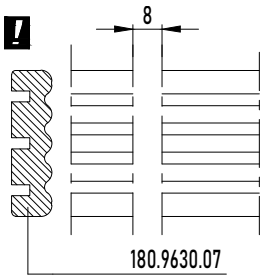

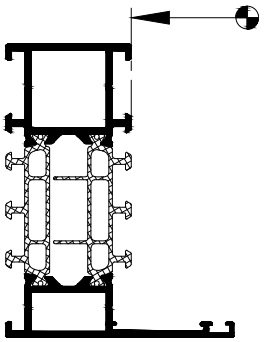

DRAINAGE MC HIDDEN

HIDDEN DRAINAGE TRANSOM-MULLION Re - De - DRAINAGE PIECE 8MM

MASTERLINE 8-De, MASTERLINE 8-Re

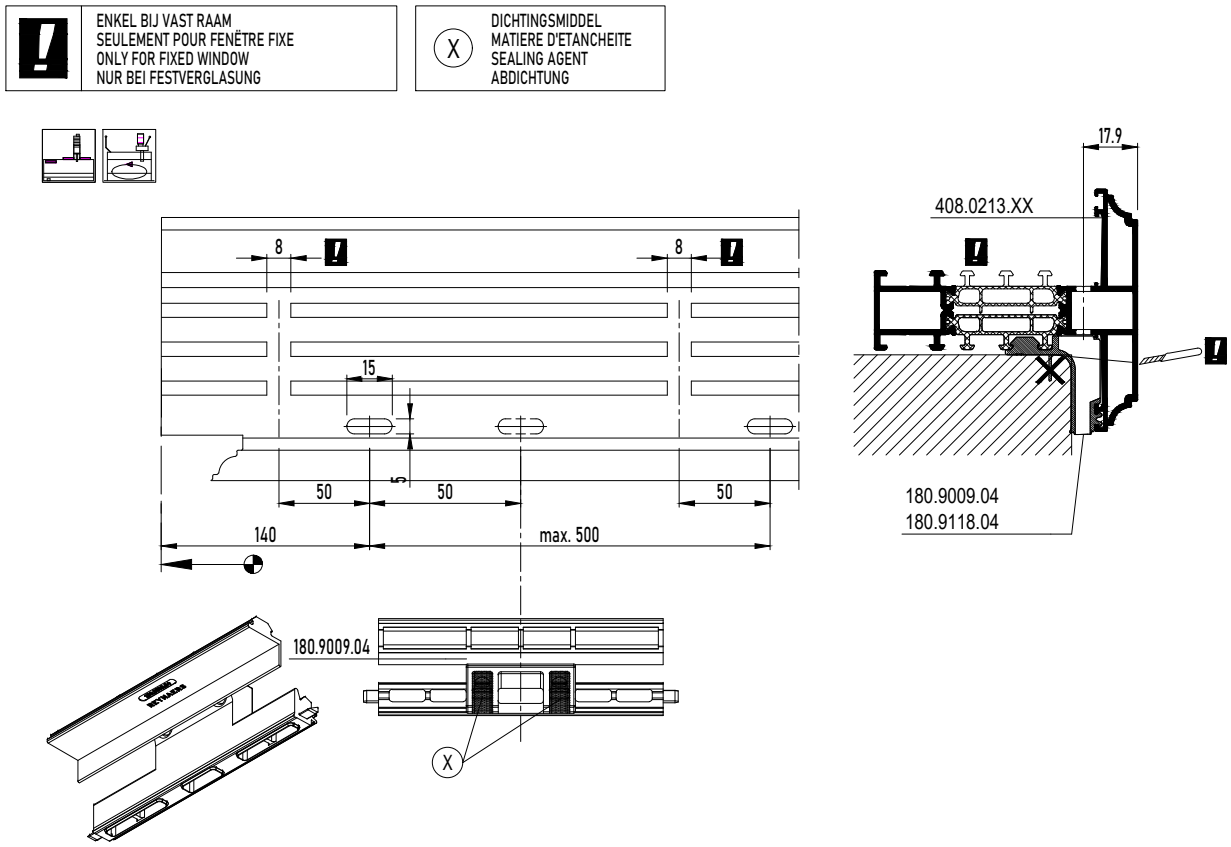

DRAINAGE MC HIDDEN

HIDDEN DRAINAGE TRANSOM-MULLION Re - De - DRAINAGE PIECE 8MM

MASTERLINE 8-De, MASTERLINE 8-Re



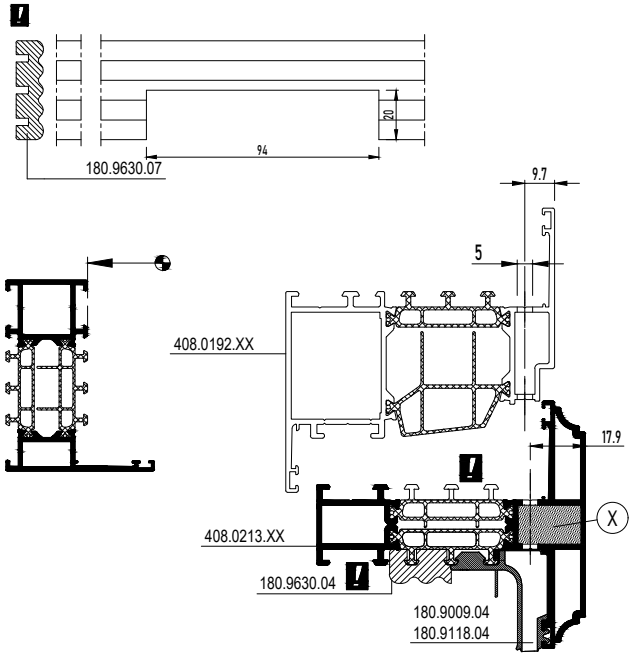

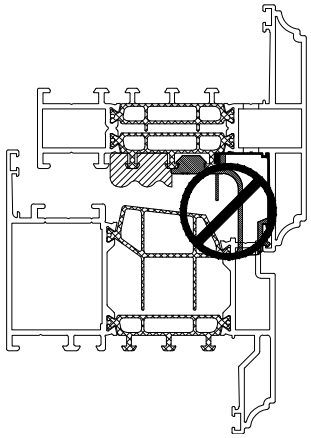

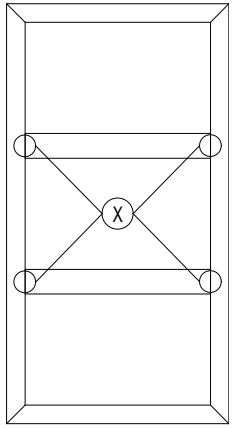

DRAINAGE MC HIDDEN

HIDDEN DRAINAGE TRANSOM-MULLION Re - De - DRAINAGE PIECE 4MM

MASTERLINE 8-De, MASTERLINE 8-Re

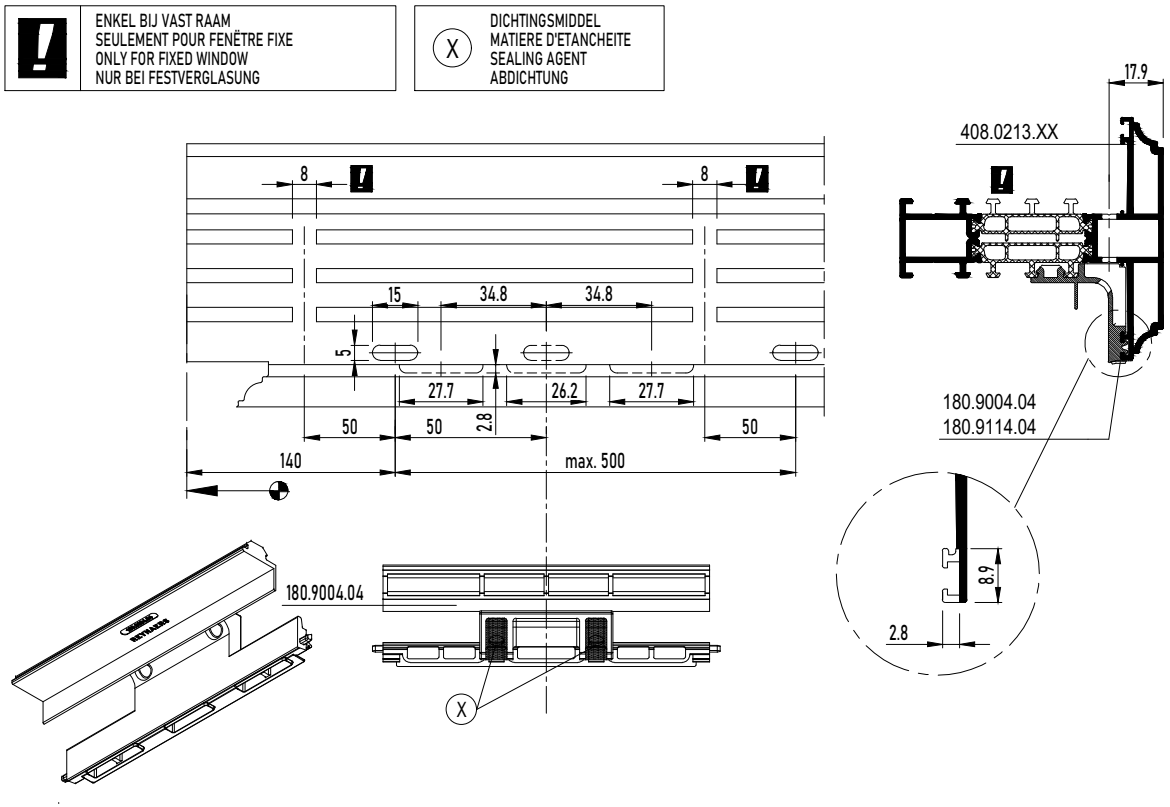

DRAINAGE MC HIDDEN

HIDDEN DRAINAGE TRANSOM-MULLION Re - De - DRAINAGE PIECE 4MM

MASTERLINE 8-De, MASTERLINE 8-Re

ENKEL BIJ VAST RAAM SEULEMENT POUR FENÊTRE FIXE ONLY FOR FIXED WINDOW NUR BEI FESTVERGLASUNG	DICHTINGSMIDDEL MATIERE D'ETANCHEITE SEALING AGENT ABDICHTUNG

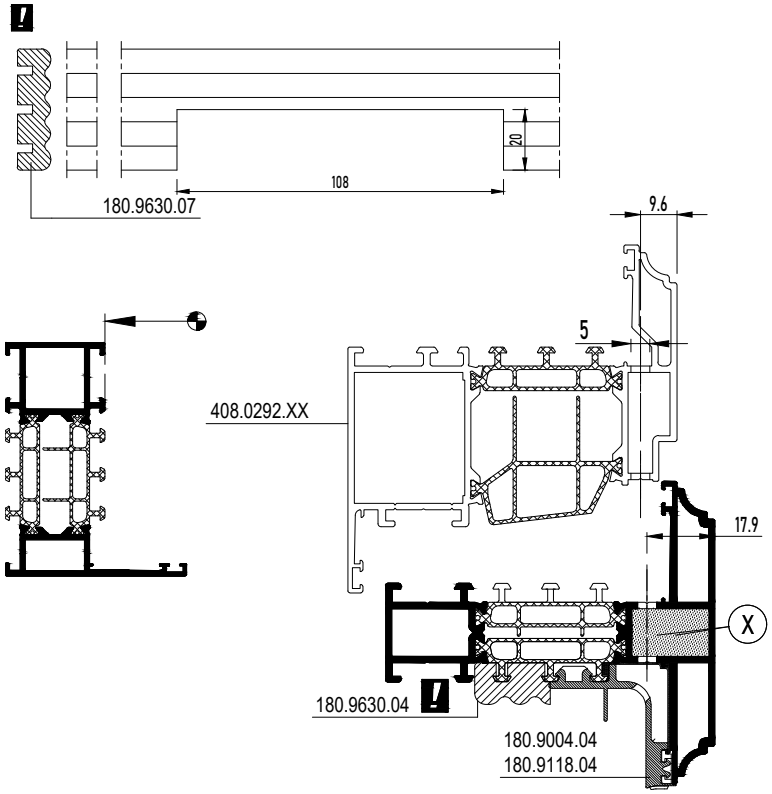

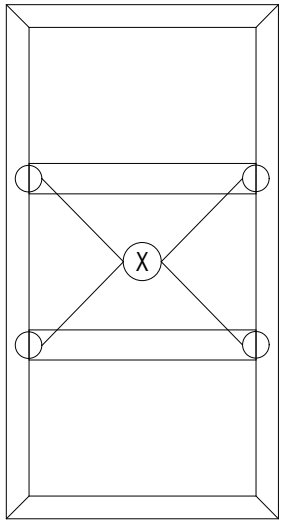

Bij gebruik van een voorgeponste glaslat dienen de ontwateringsgaten overeen te komen met de gaten van de glaslat.
En employant une parclose prépoinconnée les trous de drainage de tous les profilés doivent correspondre aux trous de la parclose.
When using prepunched glazing beads the drainage holes of all profiles should correspond with the holes of the glazing bead.
Bei Anwendung vorgelochter Glasleisten sollen die Entwässerungslöcher aller Profilen mit den Löchern der Glasleiste übereinstimmen.

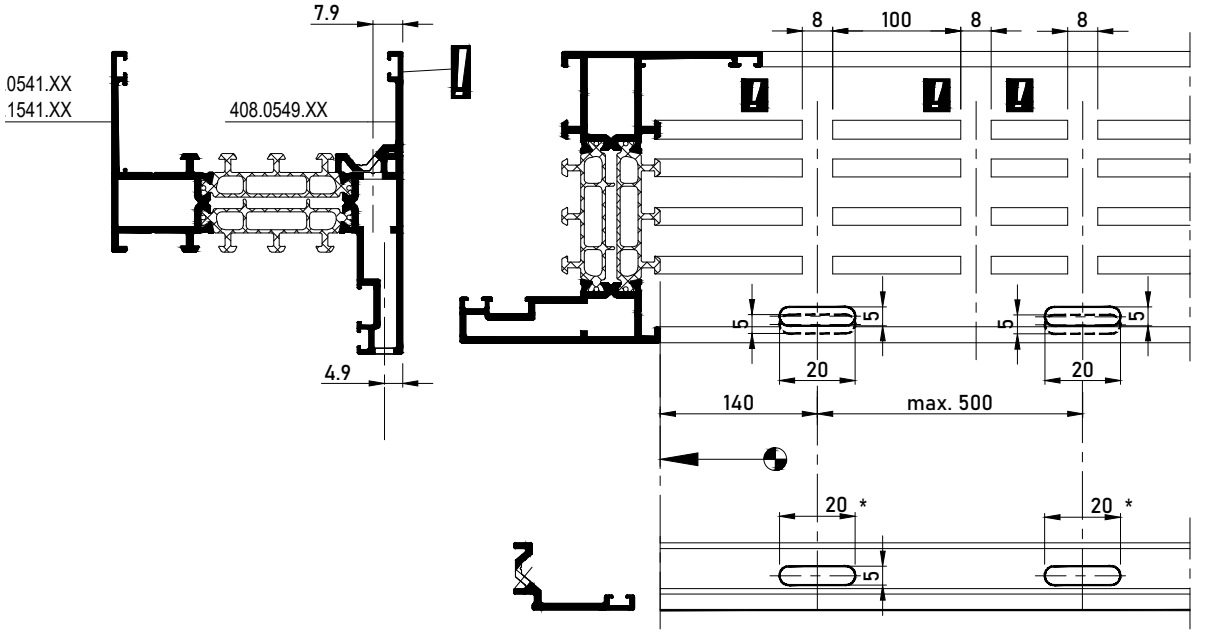

!	ENKEL BIJ VAST RAAM SEULEMENT POUR FENËTRE FIXE ONLY FOR FIXED WINDOW NUR BEI FESTVERGLASUNG

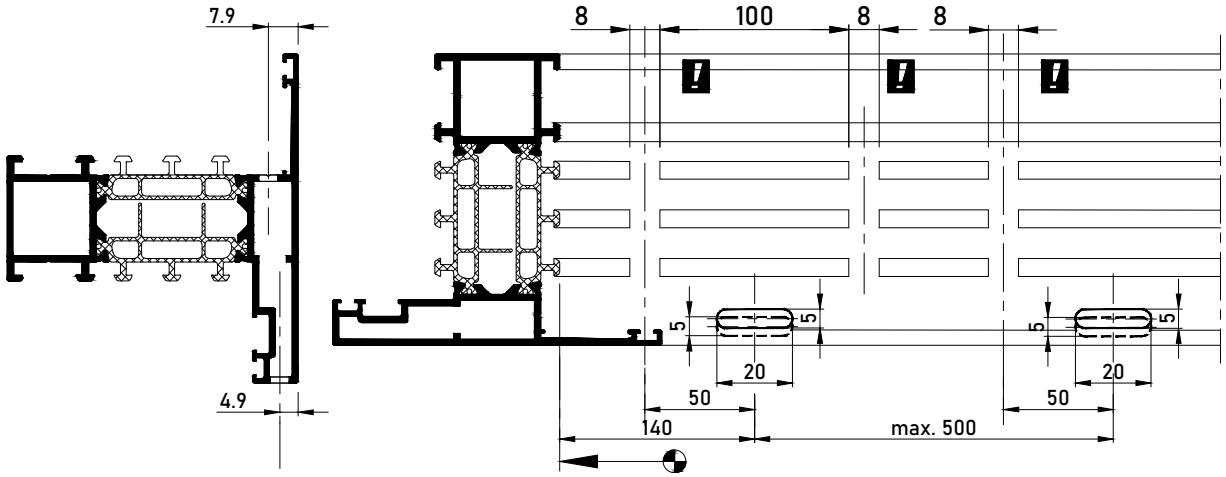

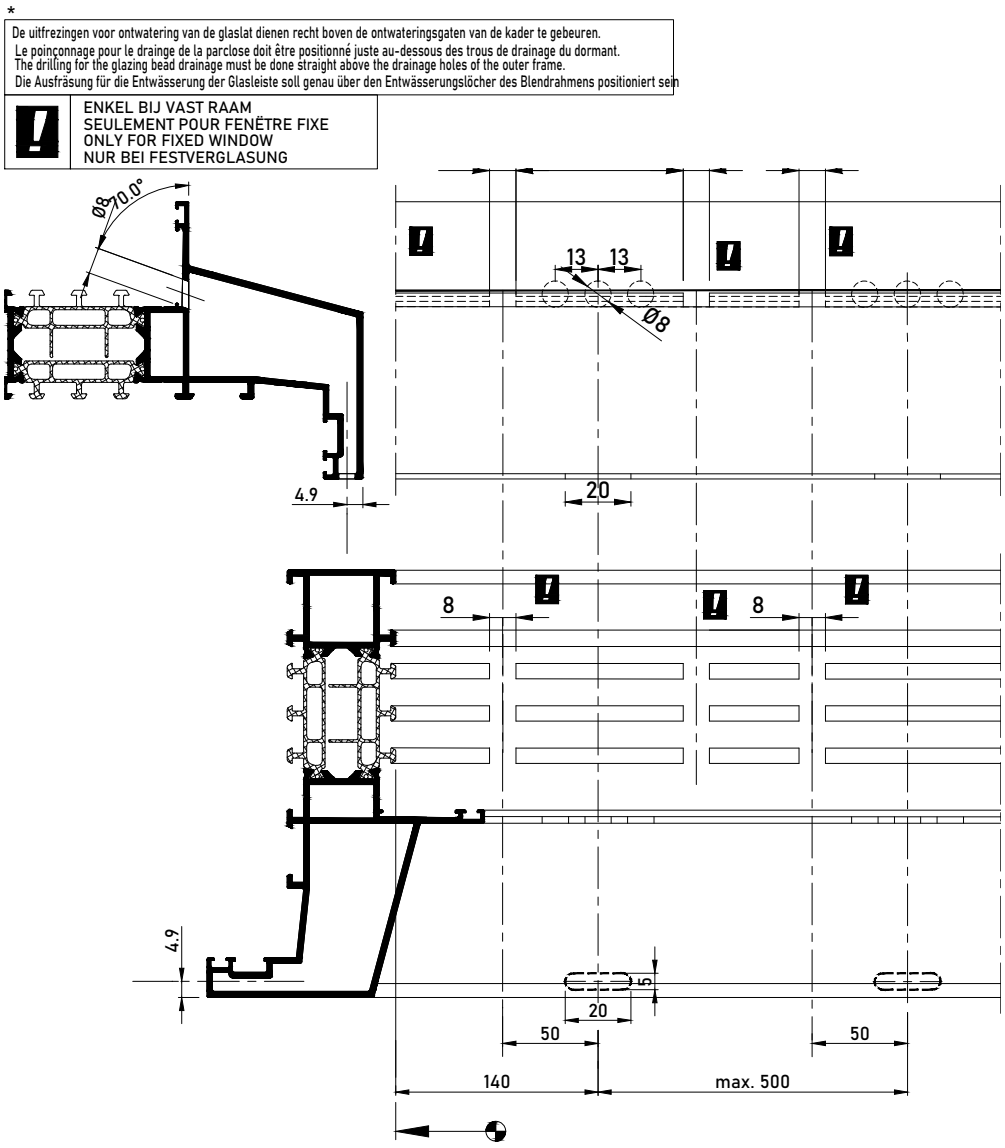
*
De uitfrezingen voor ontwatering van de glaslat dienen recht boven de ontwateringsgaten van de kader te gebeuren.
Le poinçonnage pour le draingе de la parclose doit être positionné juste au-dessous des trous de drainage du dormant.
The drilling for the glazing bead drainage must be done straight above the drainage holes of the outer frame.
Die Ausfräsung für die Entwässerung der Glasleiste soll genau über den Entwässerungslöcher des Blendrahmens positioniert sein
ENKEL BIJ VAST RAAM
SEULEMENT POUR FENËTRE FIXE
ONLY FOR FIXED WINDOW
NUR BEI FESTVERGLASUNG
Ø8
10.0°
13
13
Ø8
4.9
20
8
8
4.9
5
20
50
50
140
max. 500

DRAINAGE MC HIDDEN

HIDDEN DRAINAGE FRAME

MASTERLINE 8-Fu

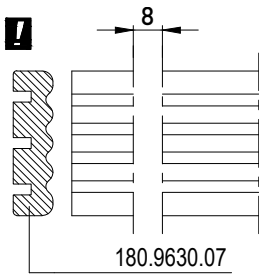

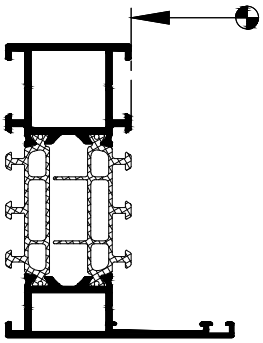

DRAINAGE MC HIDDEN

HIDDEN DRAINAGE FRAME - DRAINAGE PIECE 4MM

MASTERLINE 8-Fu

ENKEL BIJ VAST RAAM SEULEMENT POUR FENËTRE FIXE ONLY FOR FIXED WINDOW NUR BEI FESTVERGLASUNG	DICHTINGSMIDDEL MATIERE D'ETANCHEITE SEALING AGENT ABDICHTUNG

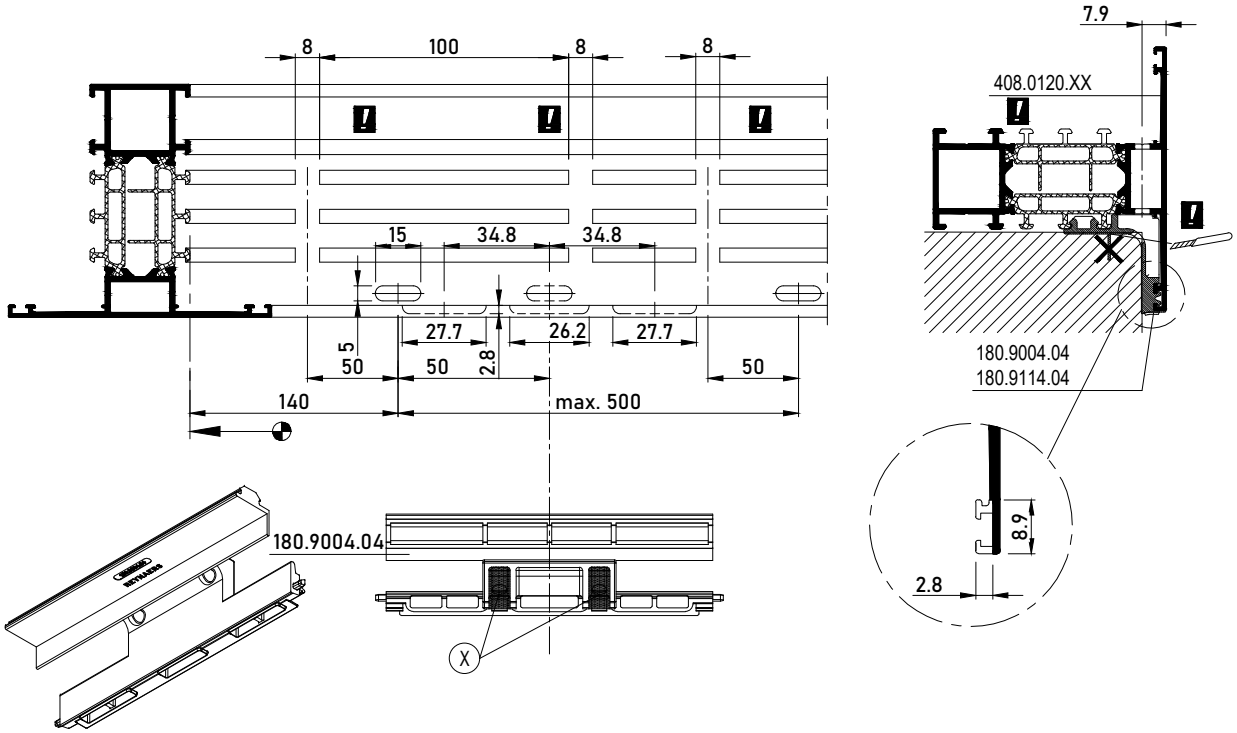

DRAINAGE MC HIDDEN

HIDDEN DRAINAGE FRAME - DRAINAGE PIECE 4MM

MASTERLINE 8-Fu

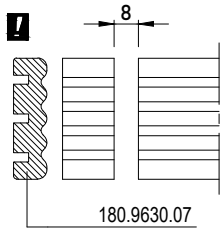

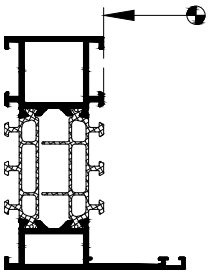

DRAINAGE MC HIDDEN

HIDDEN DRAINAGE FRAME - DRAINAGE PIECE 8MM

MASTERLINE 8-Fu

ENKEL BIJ VAST RAAM SEULEMENT POUR FENËTRE FIXE ONLY FOR FIXED WINDOW NUR BEI FESTVERGLASUNG	(X) DICHTINGSMIDDEL MATIERE D'ETANCHEITE SEALING AGENT ABDICHTUNG

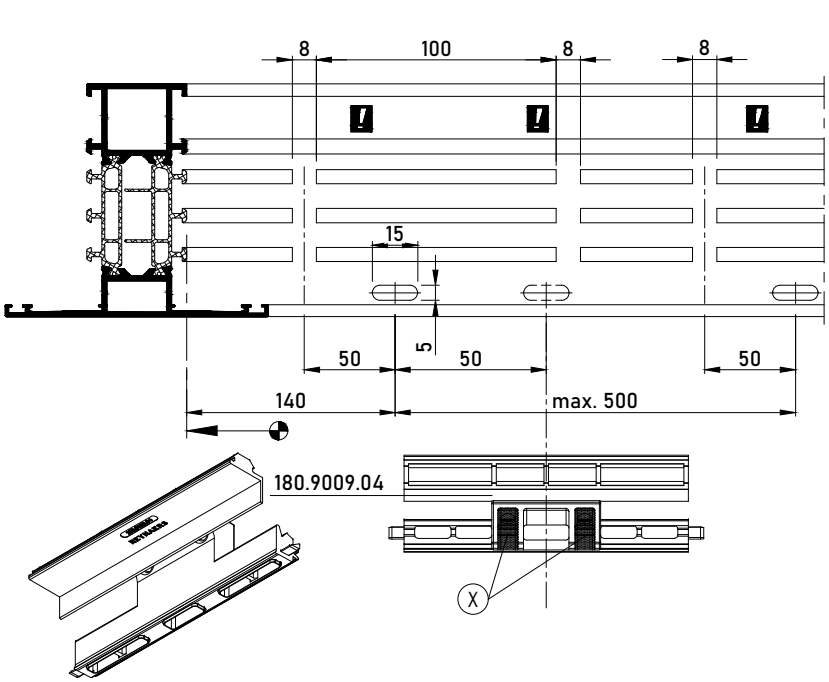

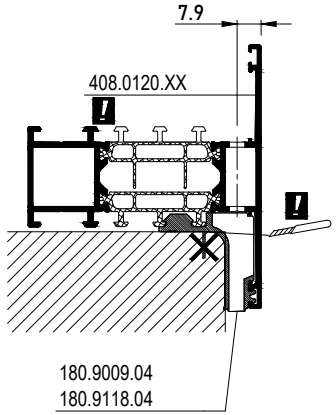

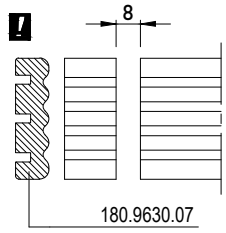
8
180.9630.07

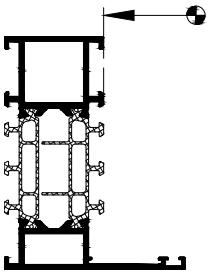

DRAINAGE MC HIDDEN

HIDDEN DRAINAGE TRANSOM-MULLION - DRAINAGE PIECE 4MM

MASTERLINE 8-Fu

ENKEL BIJ VAST RAAM SEULEMENT POUR FENËTRE FIXE ONLY FOR FIXED WINDOW NUR BEI FESTVERGLASUNG	DICHTINGSMIDDEL MATIERE D'ETANCHEITE SEALING AGENT ABDICHTUNG

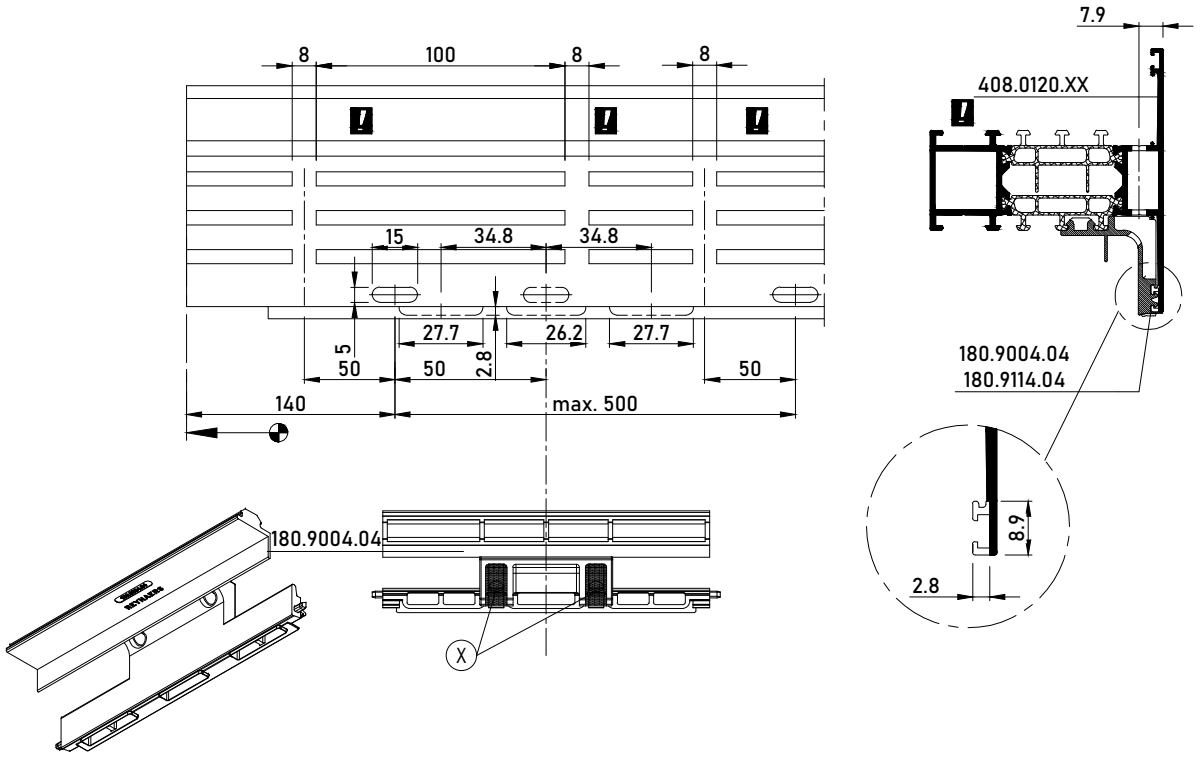

DRAINAGE MC HIDDEN

HIDDEN DRAINAGE TRANSOM-MULLION - DRAINAGE PIECE 4MM

MASTERLINE 8-Fu

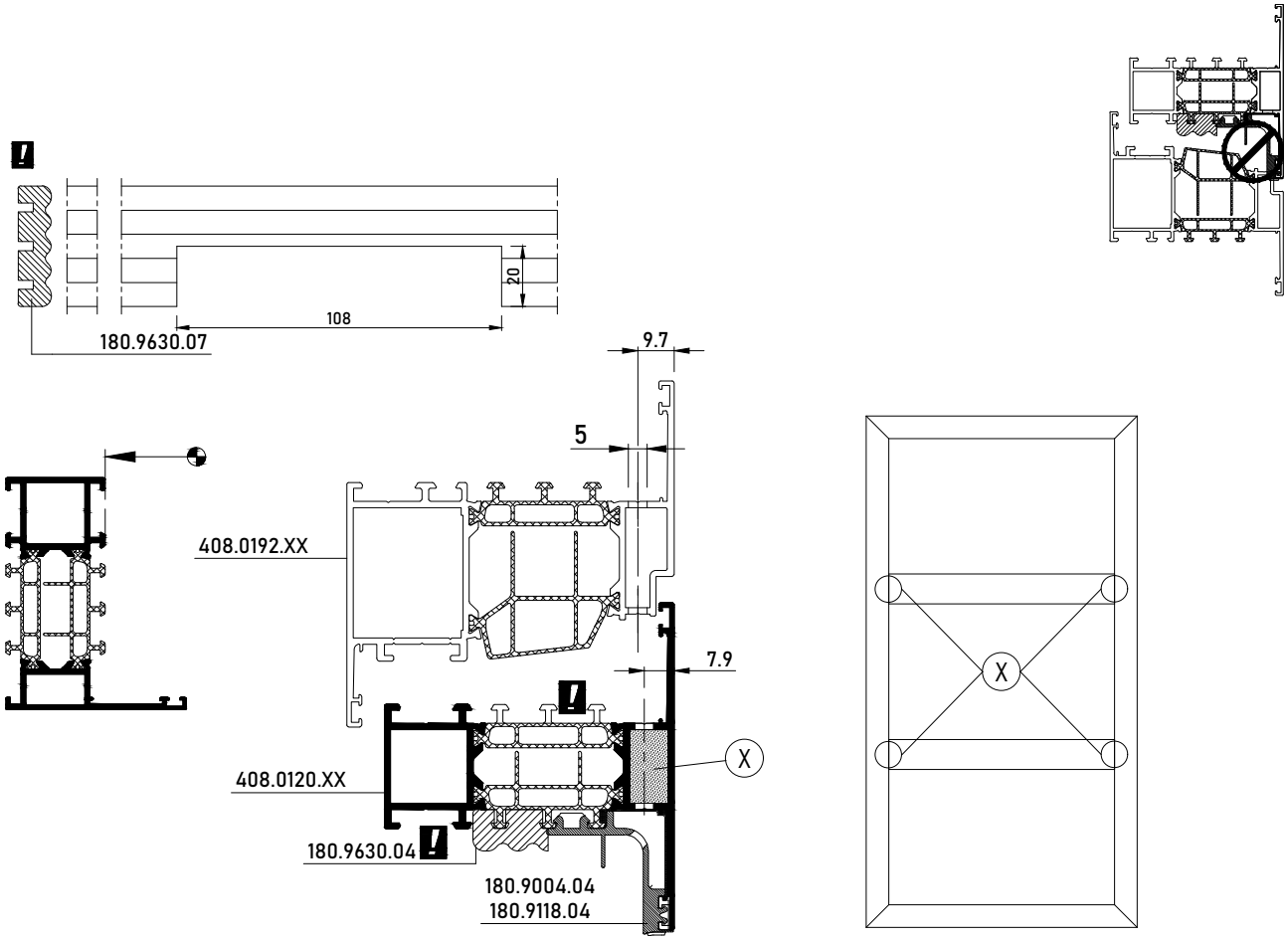

DRAINAGE MC HIDDEN

HIDDEN DRAINAGE TRANSOM-MULLION - DRAINAGE PIECE 8MM

MASTERLINE 8-Fu

ENKEL BIJ VAST RAAM SEULEMENT POUR FENËTRE FIXE ONLY FOR FIXED WINDOW NUR BEI FESTVERGLASUNG	DICHTINGSMIDDEL MATIERE D'ETANCHEITE SEALING AGENT ABDICHTUNG

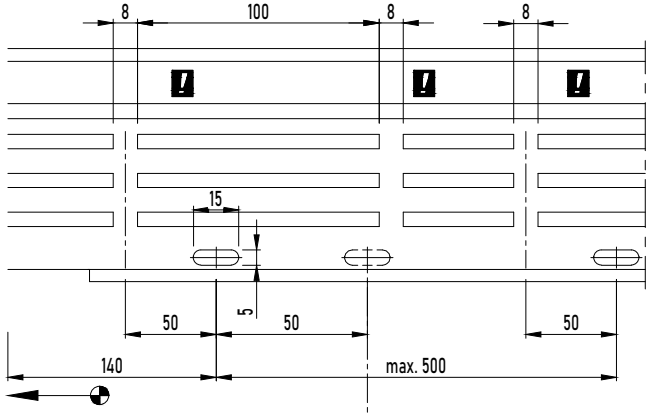

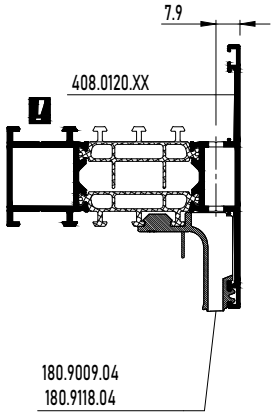

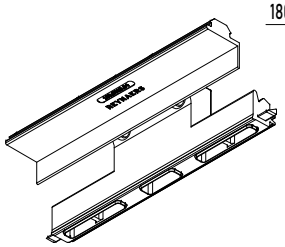

DRAINAGE MC HIDDEN

HIDDEN DRAINAGE TRANSOM-MULLION - DRAINAGE PIECE 8MM

MASTERLINE 8-Fu

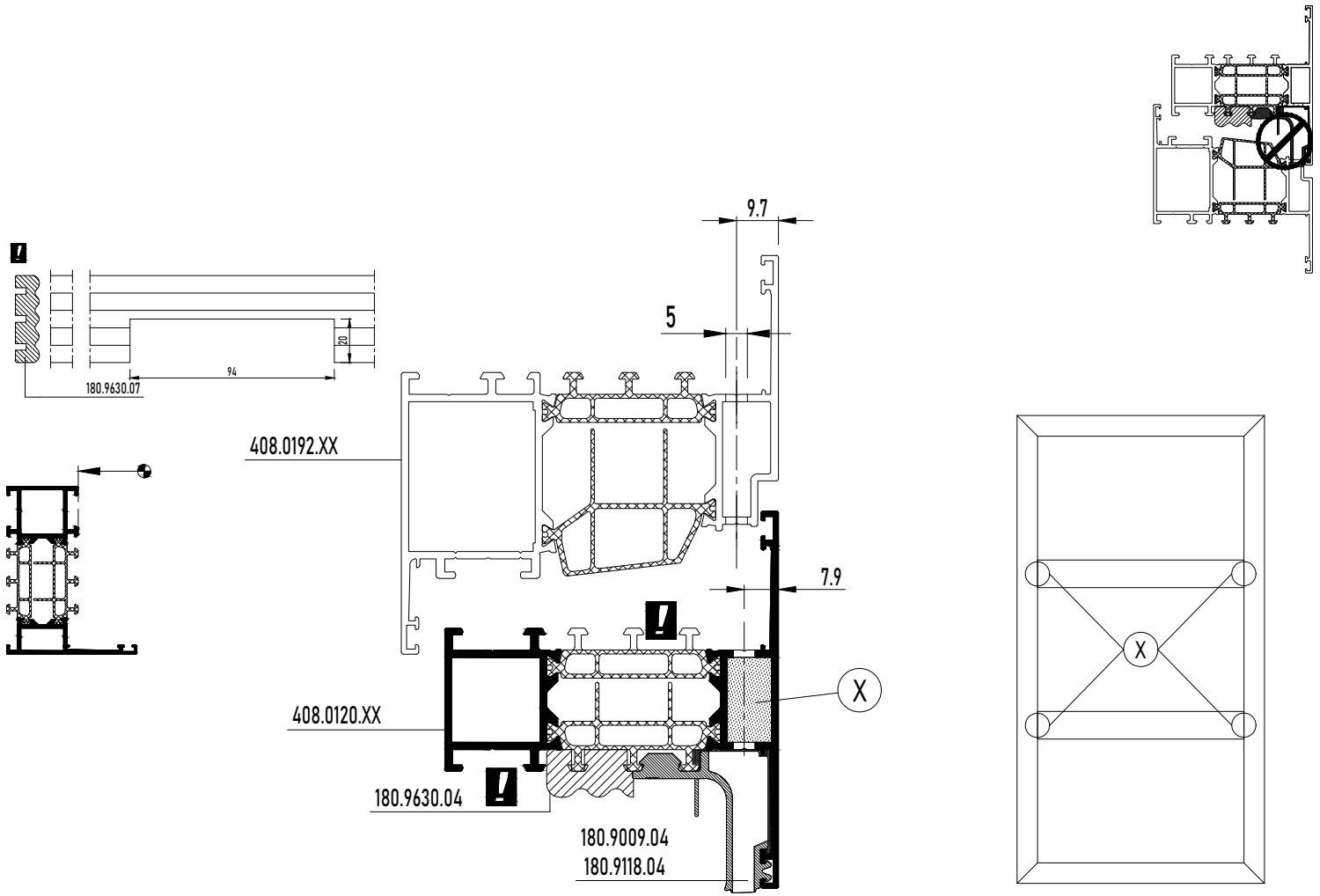

DRAINAGE CR HIDDEN

HIDDEN DRAINAGE FRAME Re - De - DRAINAGE PIECE 4MM

MASTERLINE 8-Fu

ENKEL BIJ VAST RAAM SEULEMENT POUR FENËTRE FIXE ONLY FOR FIXED WINDOW NUR BEI FESTVERGLASUNG	DICHTINGSMIDDEL MATIERE D'ETANCHEITE SEALING AGENT ABDICHTUNG

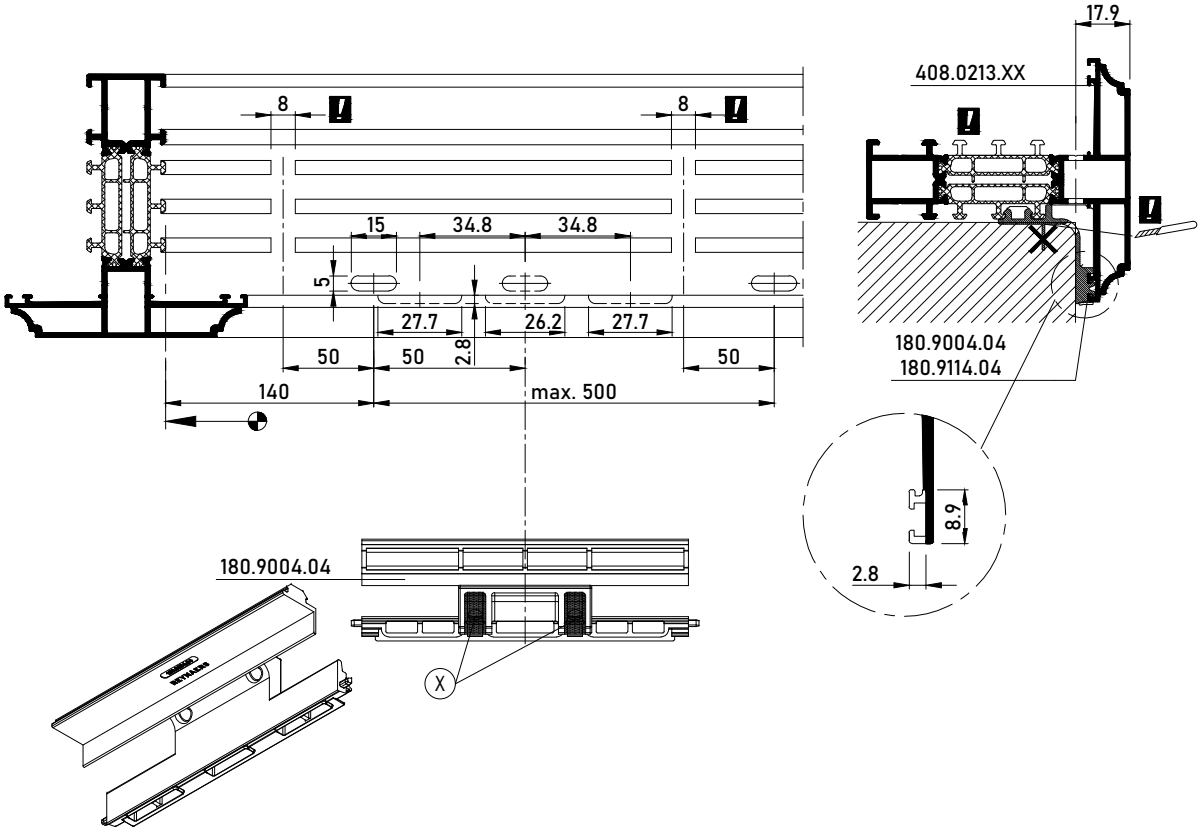

DRAINAGE CR HIDDEN

HIDDEN DRAINAGE FRAME Re - De - DRAINAGE PIECE 4MM

MASTERLINE 8-Fu

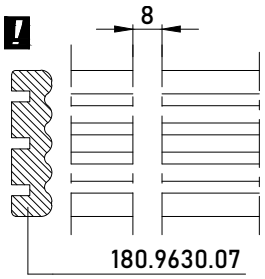

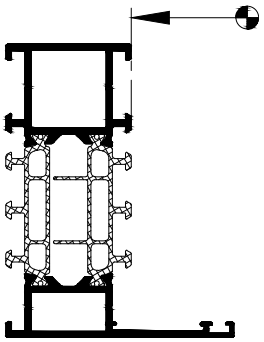

DRAINAGE CR HIDDEN

HIDDEN DRAINAGE TRANSOM-MULLION Re - De - DRAINAGE PIECE 4MM

MASTERLINE 8-Fu

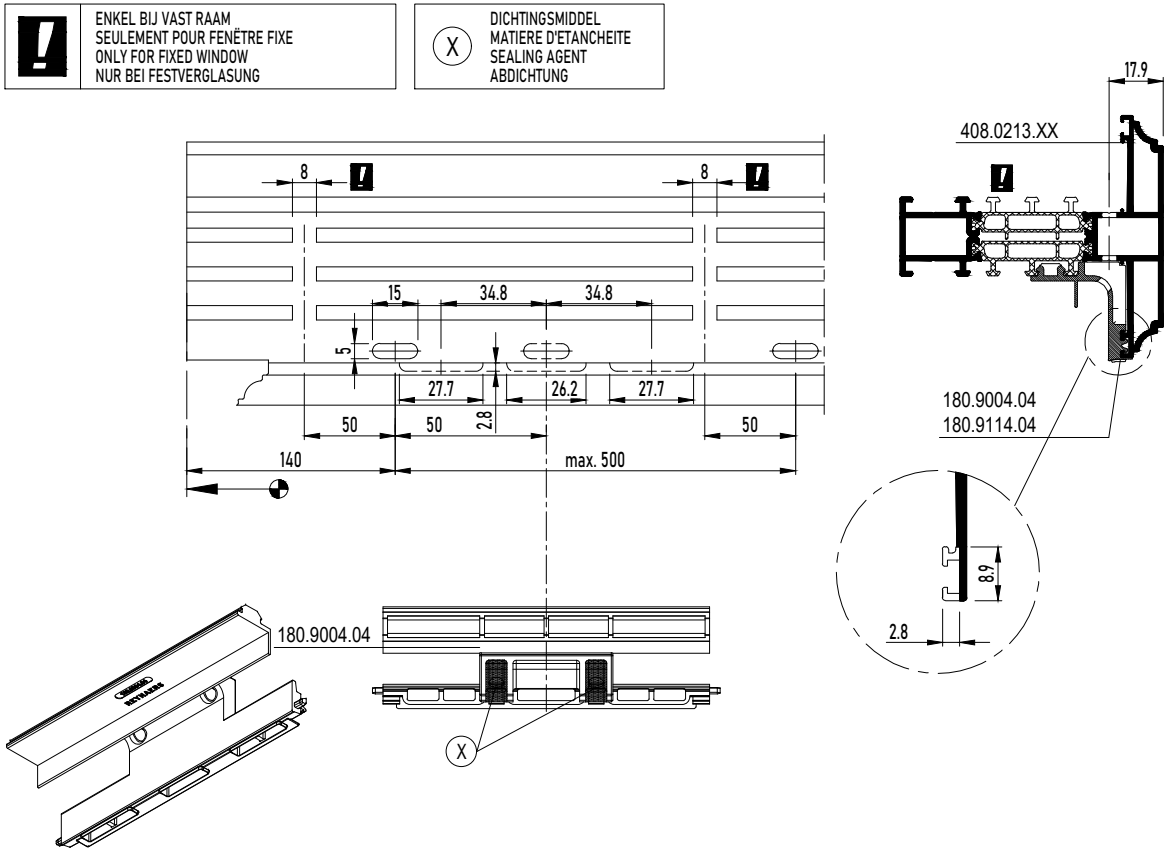

DRAINAGE CR HIDDEN

HIDDEN DRAINAGE TRANSOM-MULLION Re - De - DRAINAGE PIECE 4MM

MASTERLINE 8-Fu

ENKEL BIJ VAST RAAM SEULEMENT POUR FENËTRE FIXE ONLY FOR FIXED WINDOW NUR BEI FESTVERGLASUNG	X DICHTINGSMIDDEL MATIERE D'ETANCHEITE SEALING AGENT ABDICHTUNG

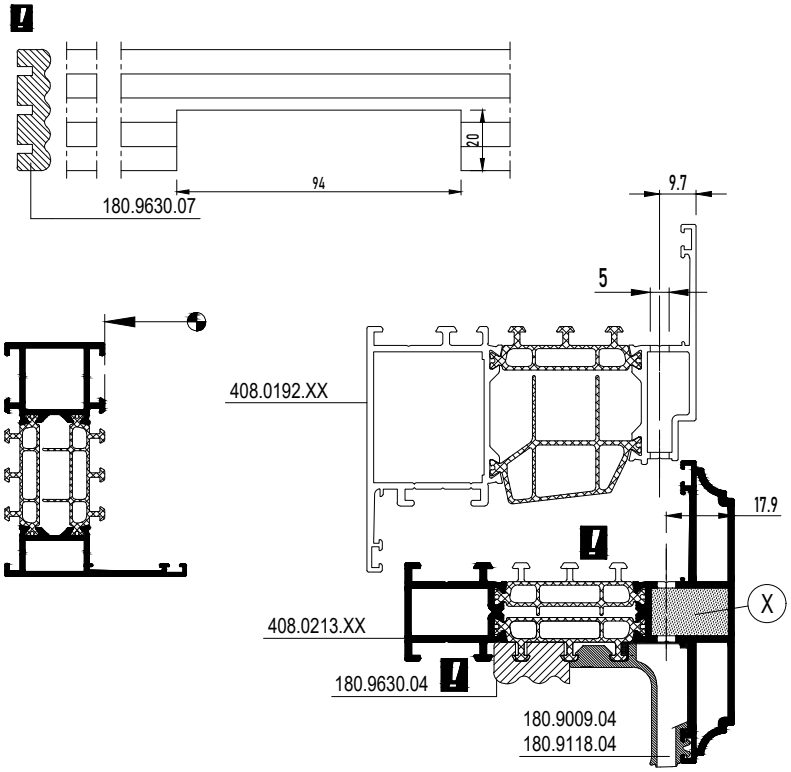

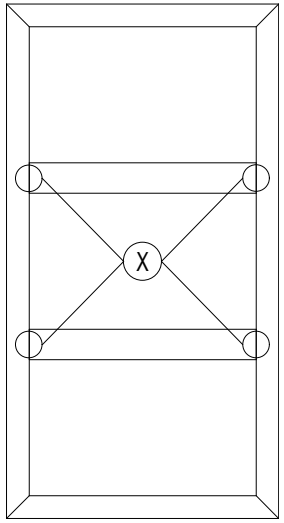

DRAINAGE CR HIDDEN

HIDDEN DRAINAGE TRANSOM-MULLION Re - De - DRAINAGE PIECE 8MM

MASTERLINE 8-Fu

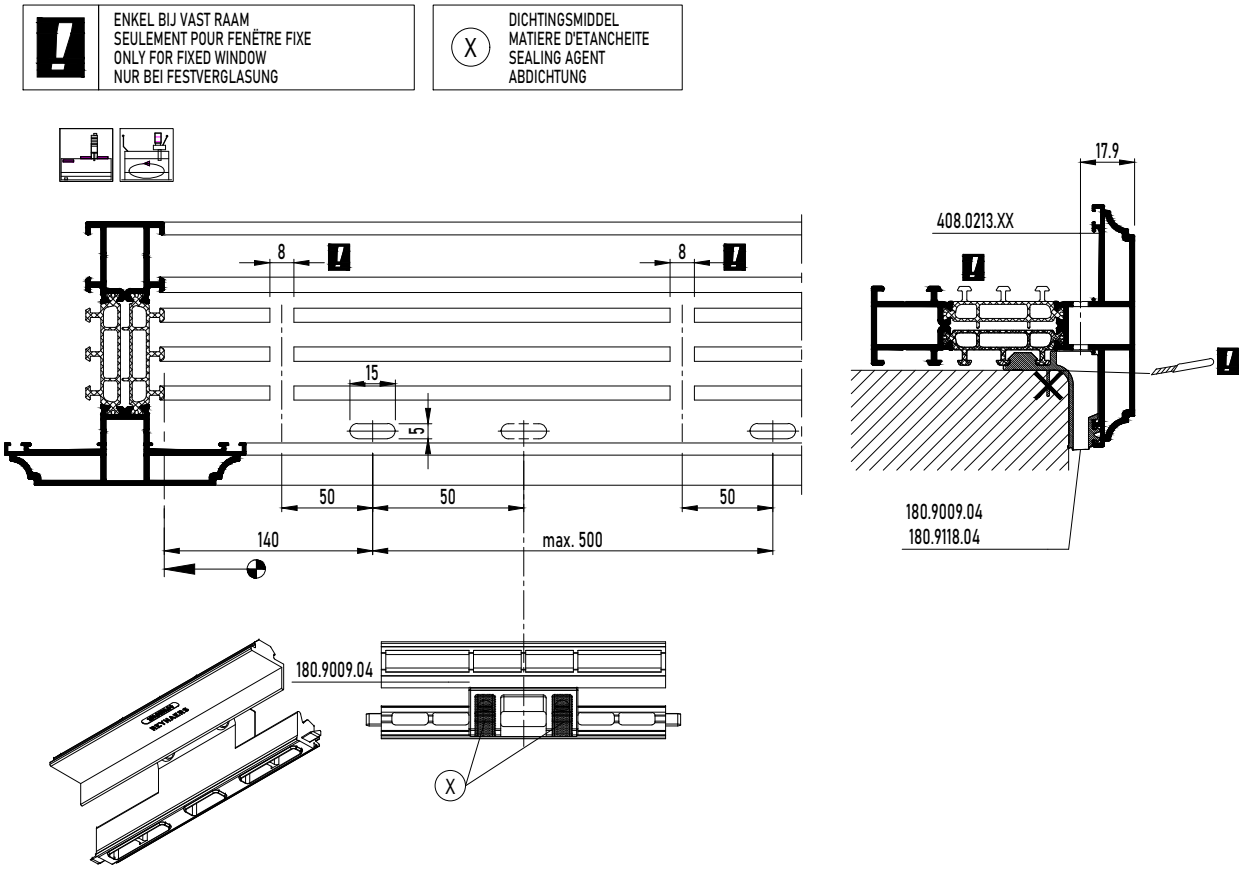

DRAINAGE CR HIDDEN

HIDDEN DRAINAGE TRANSOM-MULLION Re - De - DRAINAGE PIECE 8MM

MASTERLINE 8-Fu



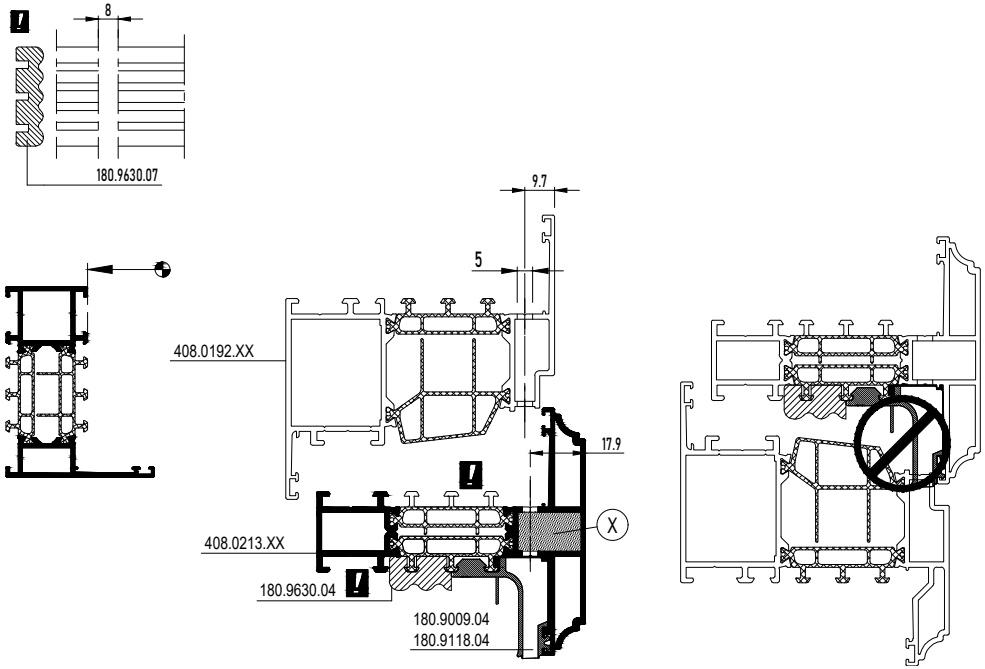

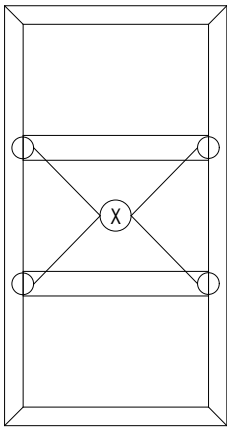

Bij gebruik van een voorgeponste glaslat dienen de ontwateringsgaten overeen te komen met de gaten van de glaslat.
En employant une parclose prépoinconnée les trous de drainage de tous les profilés doivent correspondre aux trous de la parclose.
When using prepunched glazing beads the drainage holes of all profiles should correspond with the holes of the glazing bead.
Bei Anwendung vorgelochter Glasleisten sollen die Entwässerungslöcher aller Profilen mit den Löchern der Glasleiste übereinstimmen.

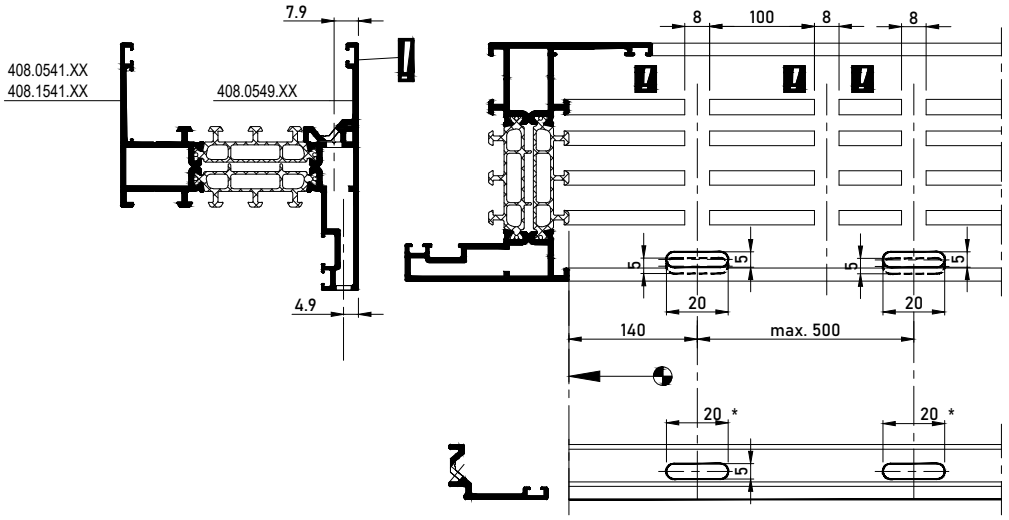

DRAINAGE CR HIDDEN

HIDDEN DRAINAGE FRAME - DRAINAGE PIECE 4MM

MASTERLINE 8-Fu

ENKEL BIJ VAST RAAM SEULEMENT POUR FENËTRE FIXE ONLY FOR FIXED WINDOW NUR BEI FESTVERGLASUNG	(X) DICHTINGSMIDDEL MATIERE D'ETANCHEITE SEALING AGENT ABDICHTUNG

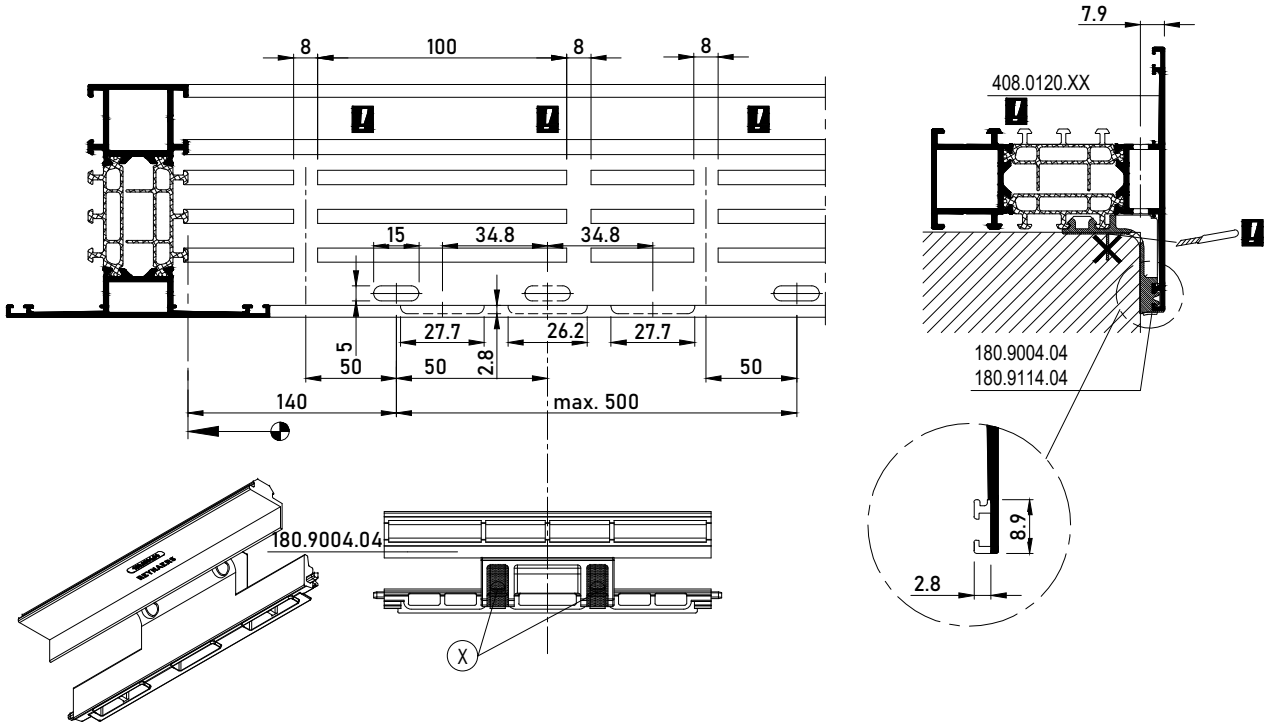

DRAINAGE CR HIDDEN

HIDDEN DRAINAGE FRAME - DRAINAGE PIECE 4MM

MASTERLINE 8-Fu

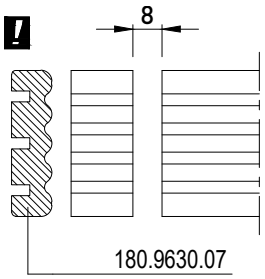

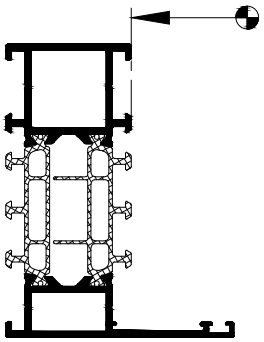

DRAINAGE CR HIDDEN

HIDDEN DRAINAGE FRAME - DRAINAGE PIECE 8MM

MASTERLINE 8-Fu

ENKEL BIJ VAST RAAM SEULEMENT POUR FENËTRE FIXE ONLY FOR FIXED WINDOW NUR BEI FESTVERGLASUNG	DICHTINGSMIDDEL MATIERE D'ETANCHEITE SEALING AGENT ABDICHTUNG

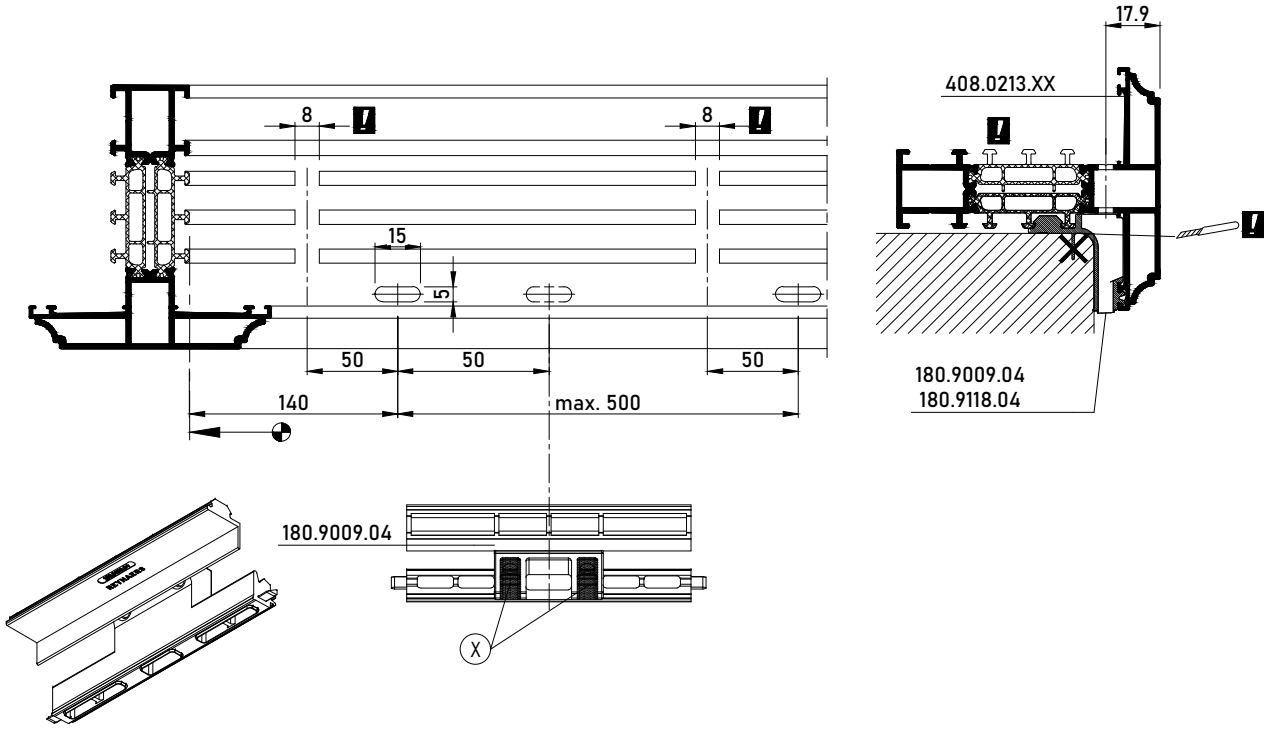

DRAINAGE CR HIDDEN

HIDDEN DRAINAGE FRAME - DRAINAGE PIECE 8MM

MASTERLINE 8-Fu

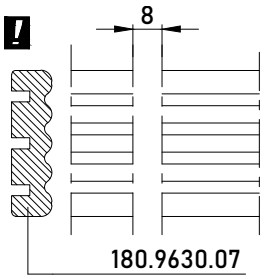

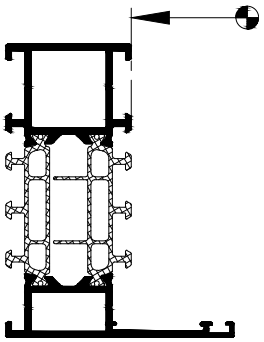

DRAINAGE CR HIDDEN

HIDDEN DRAINAGE TRANSOM-MULLION - DRAINAGE PIECE 8MM

MASTERLINE 8-Fu

ENKEL BIJ VAST RAAM SEULEMENT POUR FENËTRE FIXE ONLY FOR FIXED WINDOW NUR BEI FESTVERGLASUNG	DICHTINGSMIDDEL MATIERE D'ETANCHEITE SEALING AGENT ABDICHTUNG

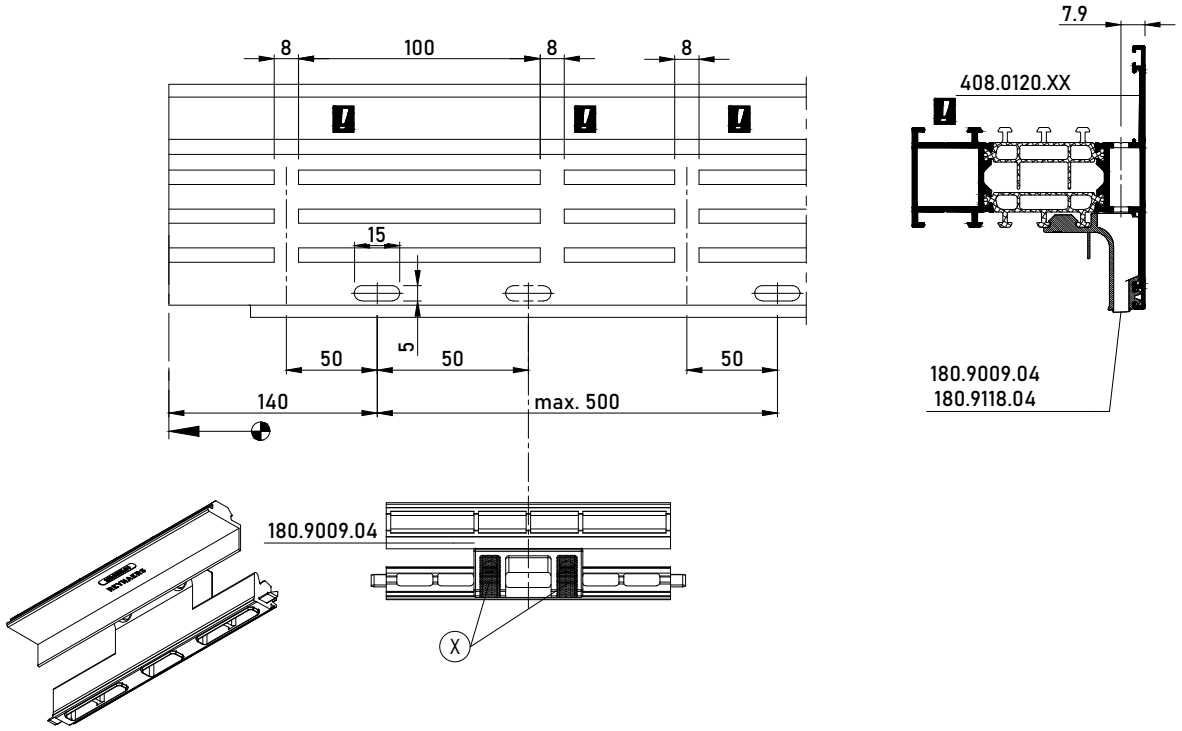

DRAINAGE CR HIDDEN

HIDDEN DRAINAGE TRANSOM-MULLION - DRAINAGE PIECE 8MM

MASTERLINE 8-Fu

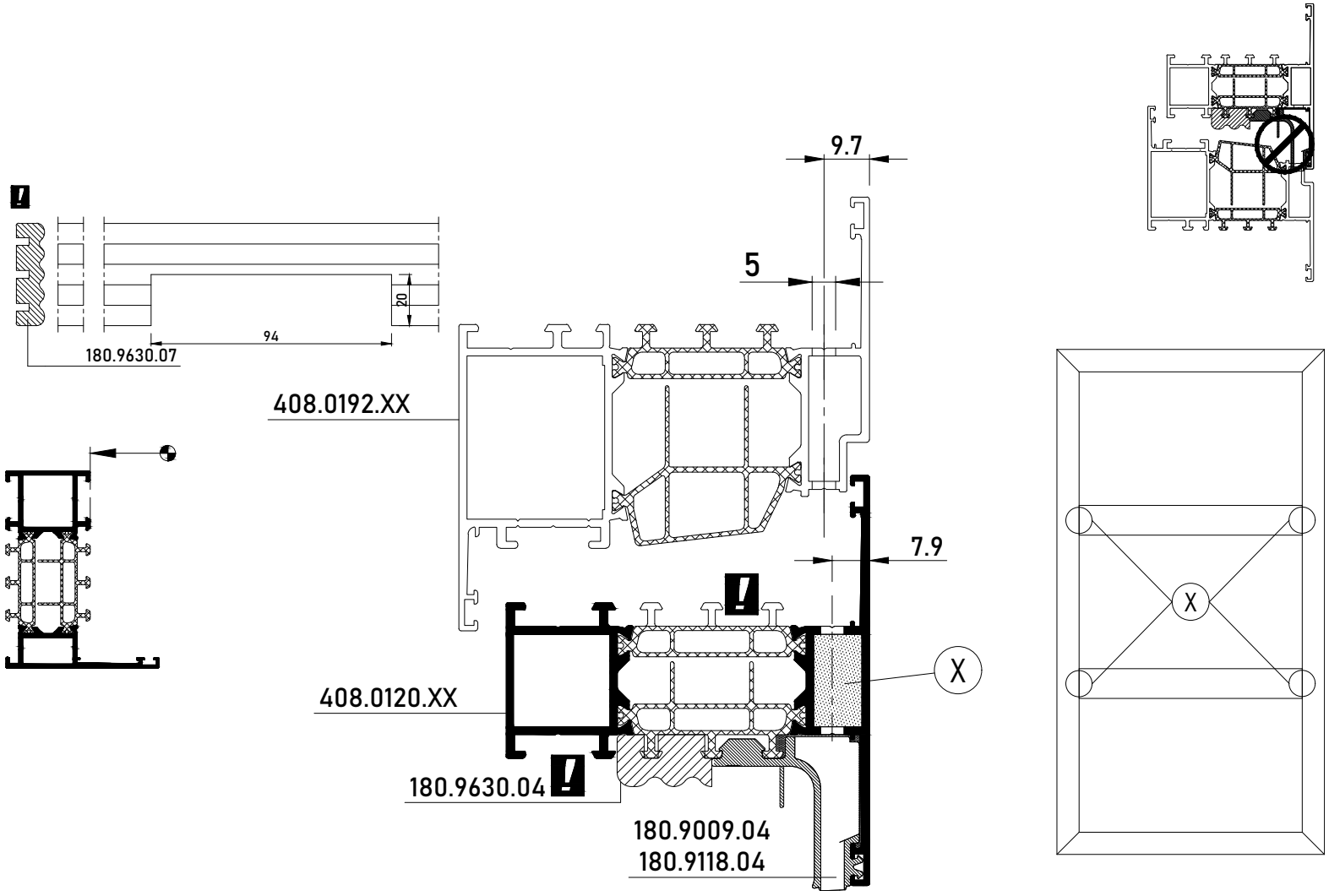

DRAINAGE CR HIDDEN

HIDDEN DRAINAGE TRANSOM-MULLION - DRAINAGE PIECE 4MM

MASTERLINE 8-Fu

ENKEL BIJ VAST RAAM SEULEMENT POUR FENËTRE FIXE ONLY FOR FIXED WINDOW NUR BEI FESTVERGLASUNG	DICHTINGSMIDDEL MATIERE D'ETANCHEITE SEALING AGENT ABDICHTUNG

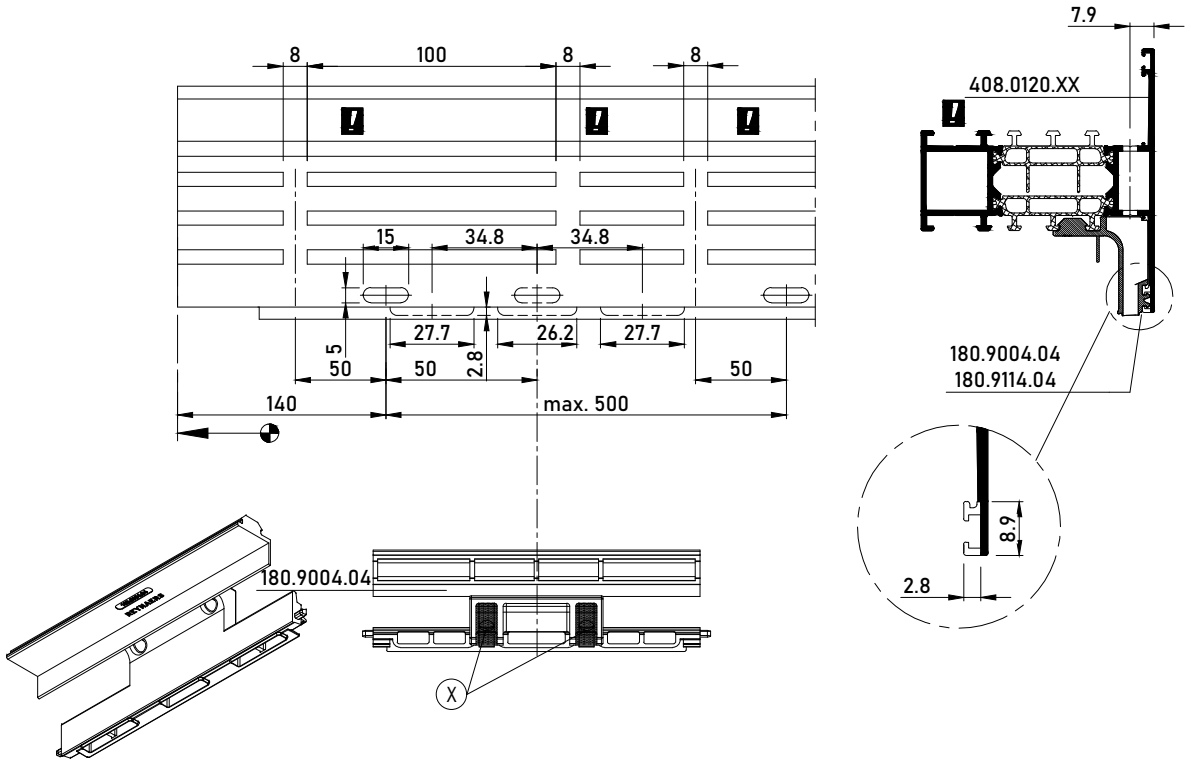

DRAINAGE CR HIDDEN

HIDDEN DRAINAGE TRANSOM-MULLION - DRAINAGE PIECE 4MM

MASTERLINE 8-Fu

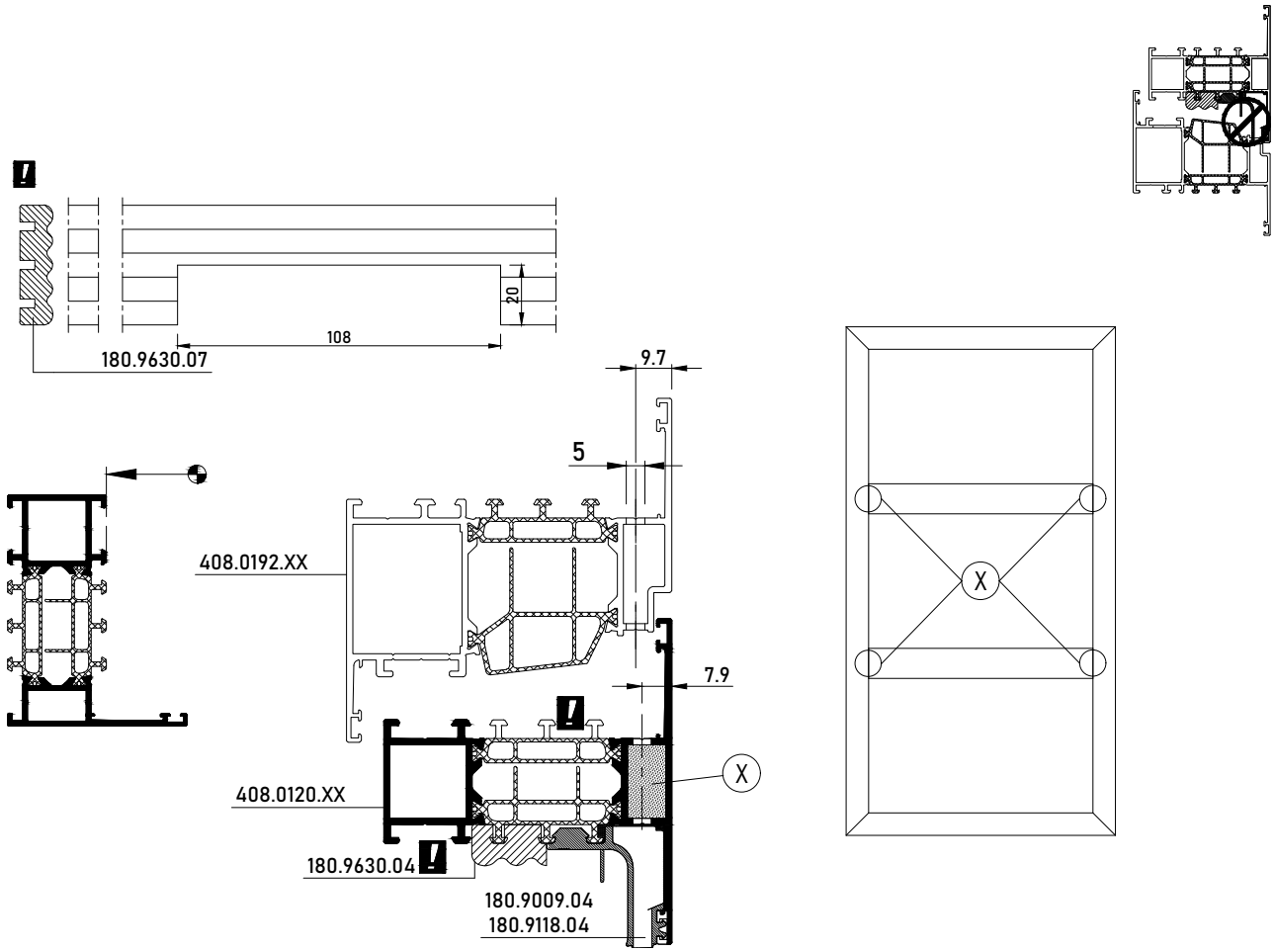

DECOMPRESSIE RAAM
DECOMPRESSION FENETRE
DECOMPRESSION WINDOW
DEKOMPRESSION VERGLASUNG

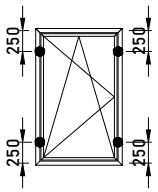

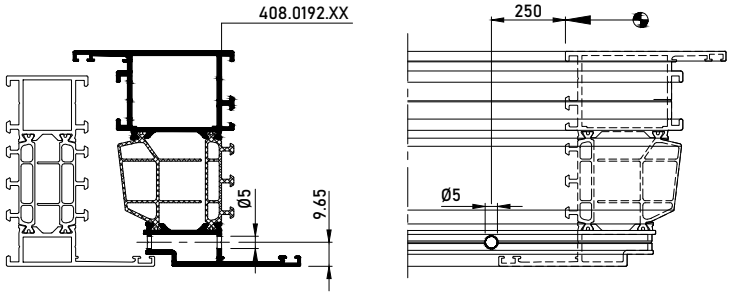

DECOMPRESSIE RAAM
DECOMPRESSION FENETRE
DECOMPRESSION WINDOW
DEKOMPRESSION VERGLASUNG

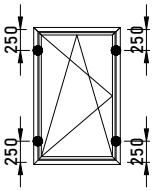

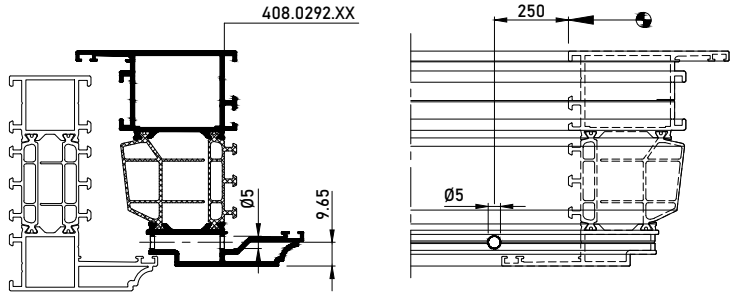

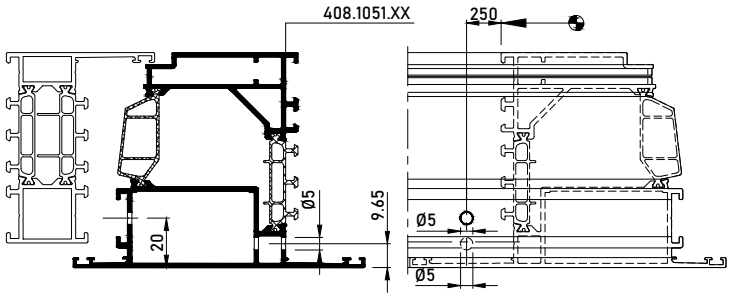

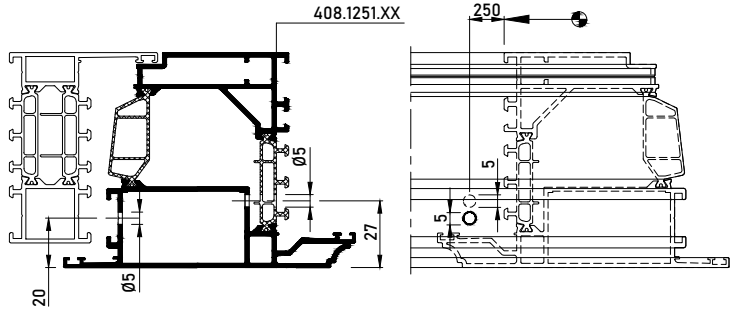

DECOMPRESSIE VAST RAAM - BINNENBEGLAZING
DECOMPRESSION FENETRE FIXE - VITRE PAR L'INTERIEUR
DECOMPRESSION FIXED WINDOW - INSIDE GLAZING
DEKOMPRESSION FESTVERGLASUNG - INNENVERGLASUNG

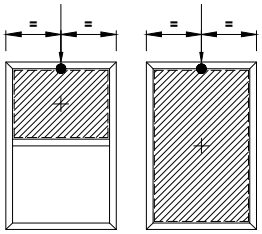

OPTIE/OPTION 1

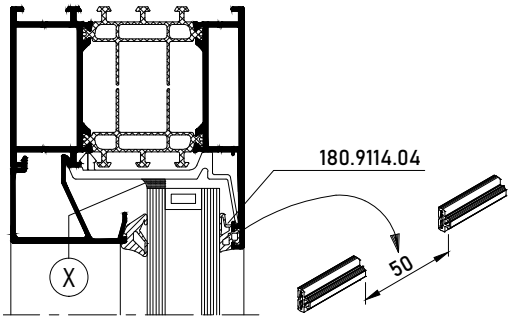

OPTIE/OPTION

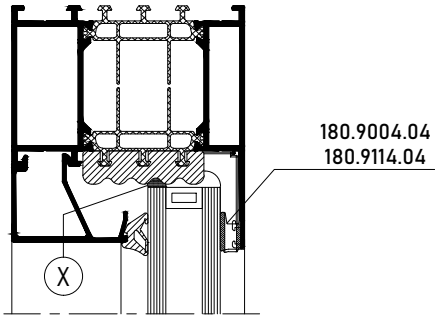

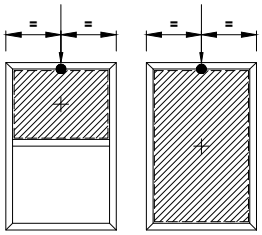

OPTIE/OPTION 1

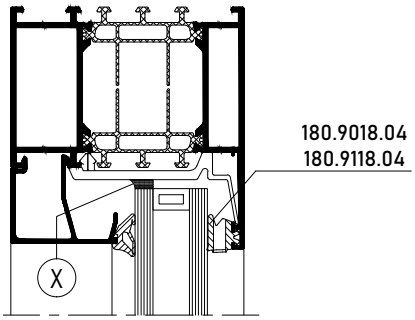

OPTIE/OPTION

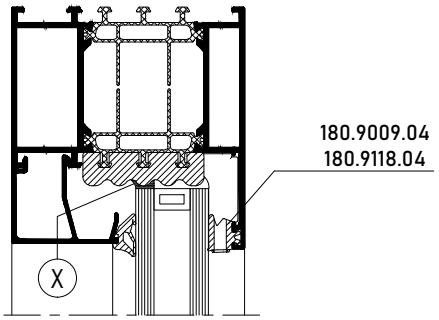

DECOMPRESSIE VAST RAAM - BUITENBEGLAZING
DECOMPRESSION FENETRE FIXE - INVERSION PARCLOSE
DECOMPRESSION FIXED WINDOW - OUTSIDE GLAZING
DEKOMPRESSION FESTVERGLASUNG - AUSSENVERGLASUNG

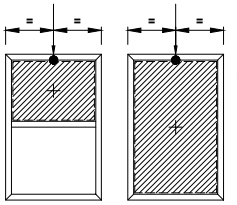

OPTIE/OPTION 1

OPTIE/OPTION 2

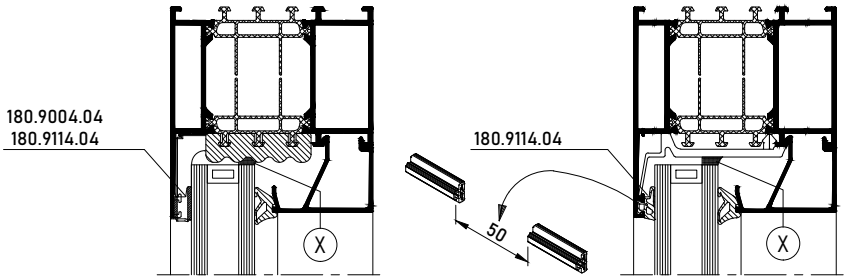

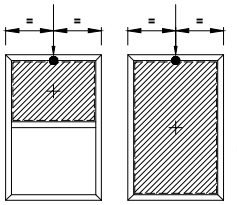

OPTIE/OPTION 1

OPTIE/OPTION 2

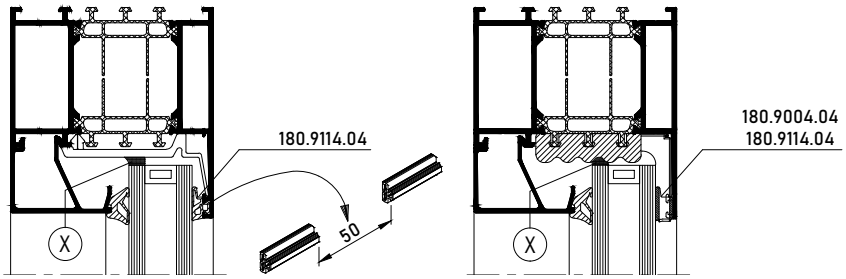

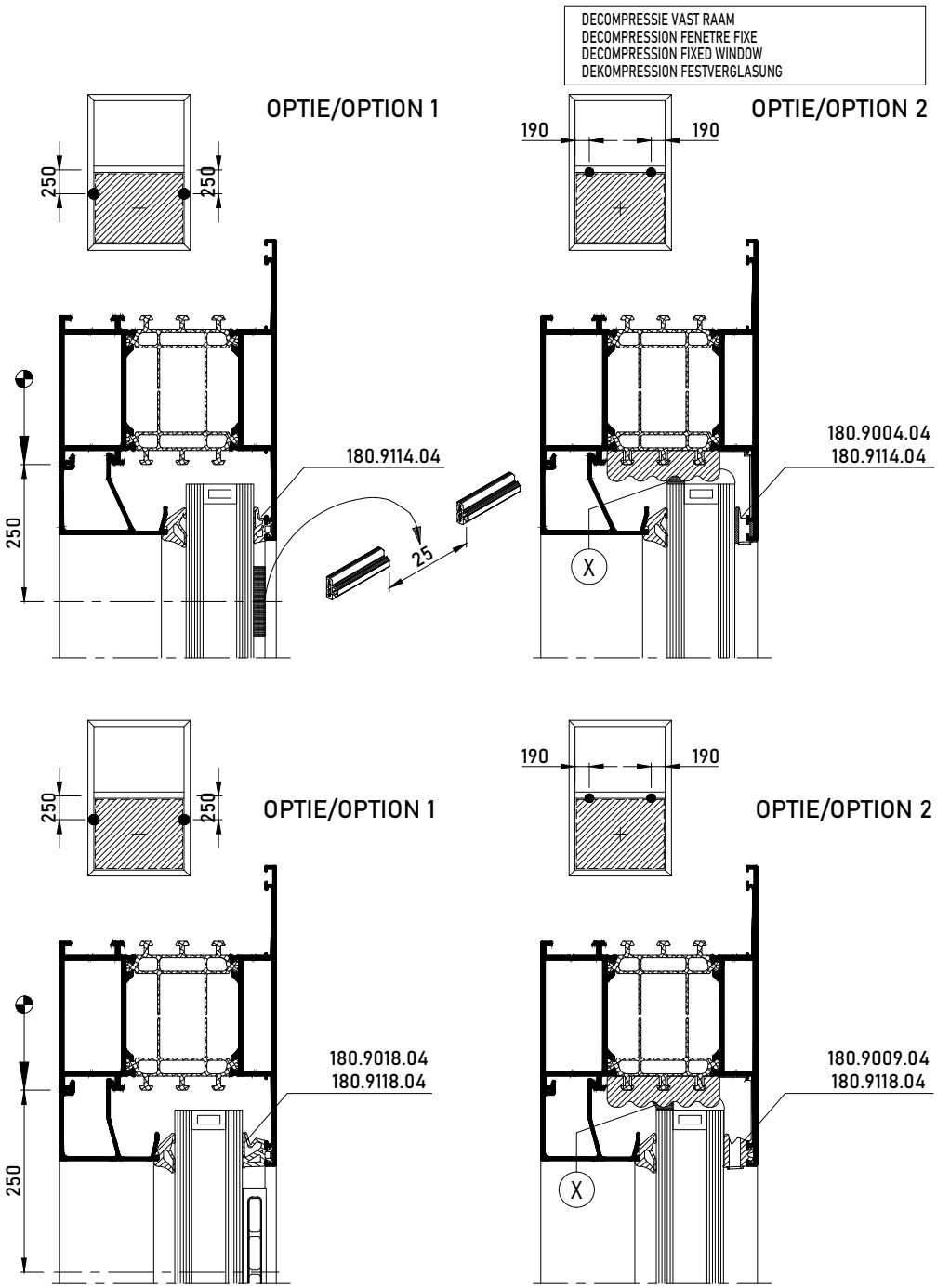
DECOMPRESSIE VAST RAAM
DECOMPRESSION FENETRE FIXE
DECOMPRESSION FIXED WINDOW
DEKOMPRESSION FESTVERGLASUNG
OPTIE/OPTION 1
OPTIE/OPTION 2
250
250
190
190
180.9114.04
180.9004.04
180.9114.04
25
X
OPTIE/OPTION 1
OPTIE/OPTION 2
250
250
190
190
180.9018.04
180.9118.04
180.9009.04
180.9118.04
X

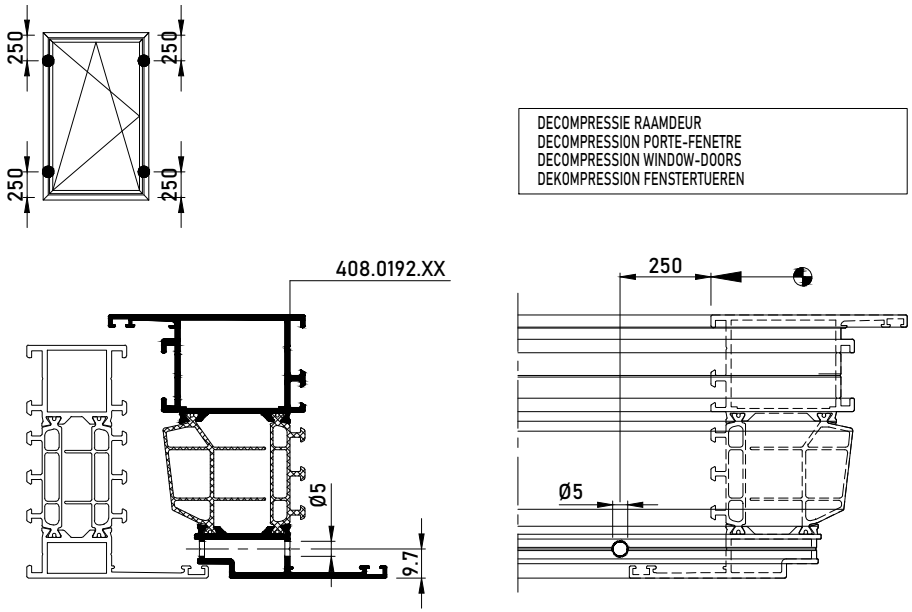
250
250
250
250
DECOMPRESSIE RAAMDEUR
DECOMPRESSION PORTE-FENETRE
DECOMPRESSION WINDOW-DOORS
DEKOMPRESSION FENSTERTUEREN
408.0192.XX
Ø5
9.7
250
Ø5

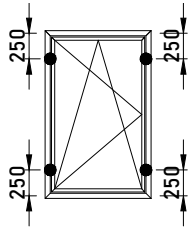

DECOMPRESSIE RAAMDEUR
DECOMPRESSION PORTE-FENETRE
DECOMPRESSION WINDOW-DOORS
DEKOMPRESSION FENSTERTUEREN

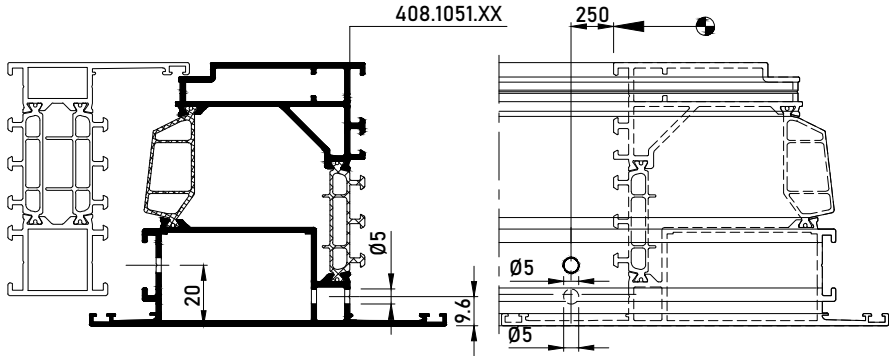

DECOMPRESSIE RAAMDEUR
DECOMPRESSION PORTE-FENETRE
DECOMPRESSION WINDOW-DOORS
DEKOMPRESSION FENSTERTUEREN

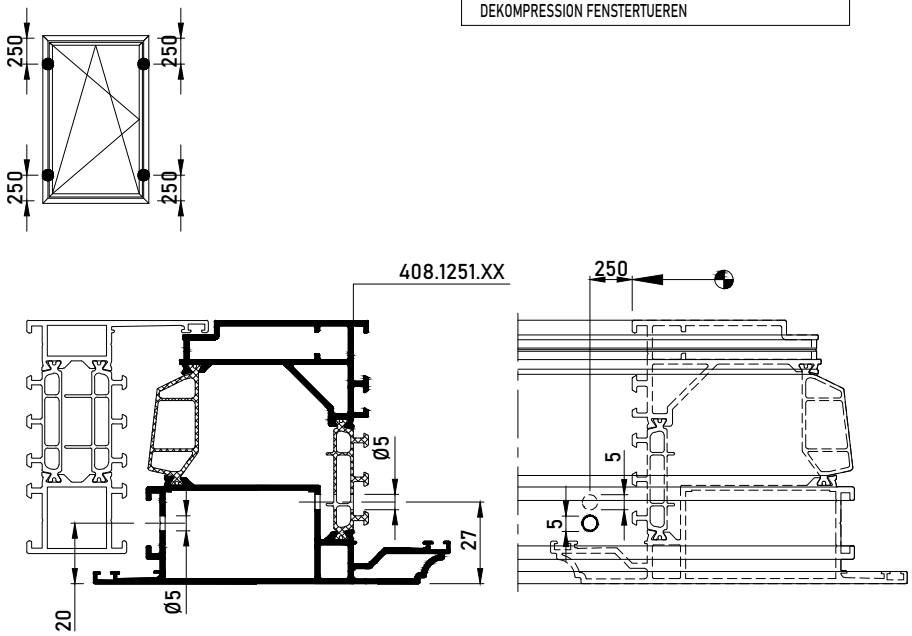

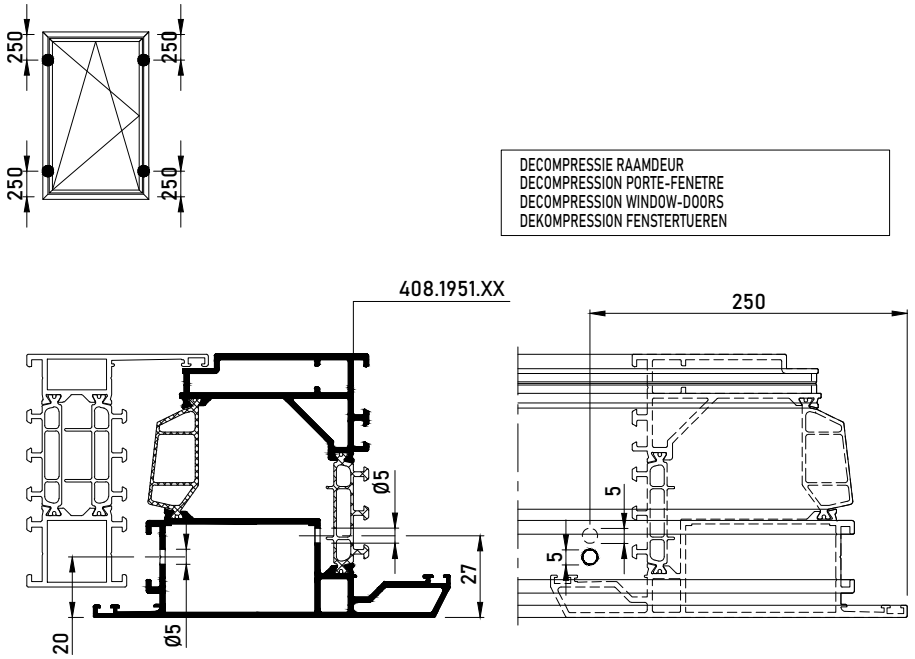
250
250
250
250
DECOMPRESSIE RAAMDEUR
DECOMPRESSION PORTE-FENETRE
DECOMPRESSION WINDOW-DOORS
DEKOMPRESSION FENSTERTUEREN
408.1951.XX
250
Ø5
27
20
Ø5
5
5

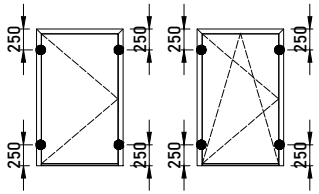

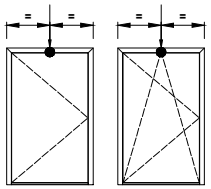

DECOMPRESSIE MAGNETUDE DEUR
DECOMPRESSION PORTE MAGNETUDE
DECOMPRESSION MAGNETUDE DOOR
DEKOMPRESSION MAGNETUDE TÜR

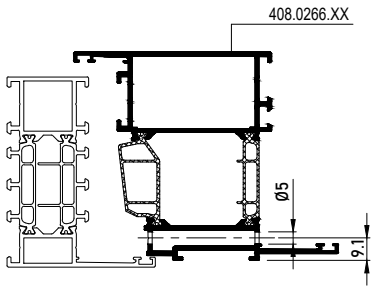

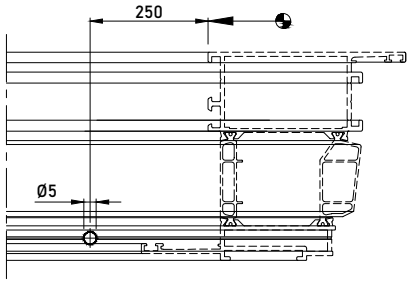

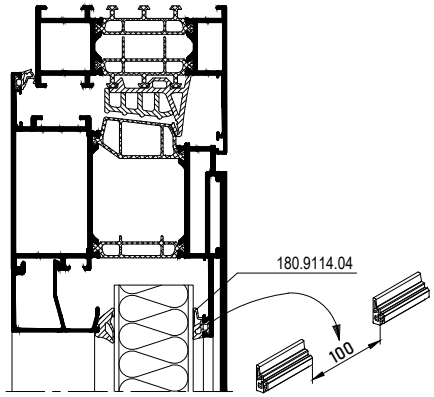

X DICHTINGSMIDDEL
MATIERE D'ETANCHEITE
SEALING AGENT
ABDICHTUNG

MONTAGEVOLGORDE
L 'ORDRE DE MONTAGE
THE ORDER OF ASSEMBLY
MONTAGEREIHENFOLGE
1 2 3 .

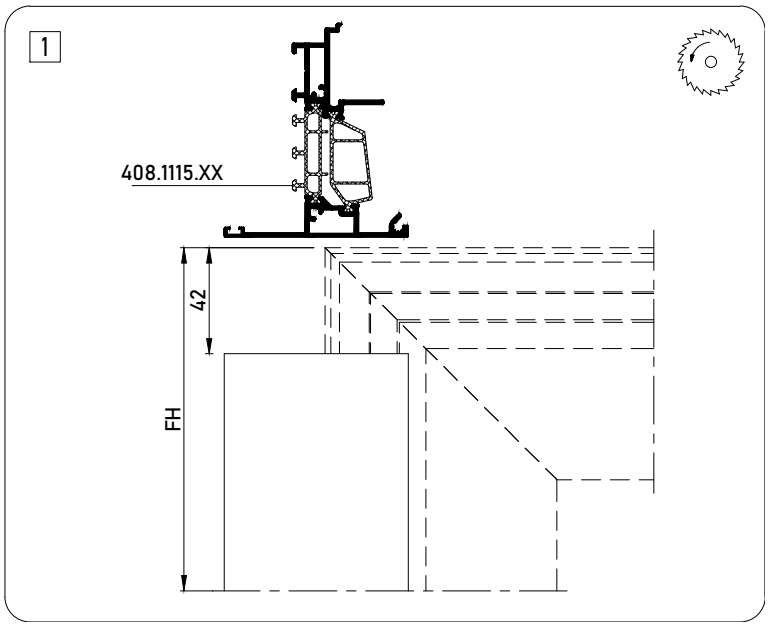

DOUBLE CASEMENT

ASSEMBLY DOUBLE CASEMENT PROFILE

MASTERLINE 8-Fu

X DICHTINGSMIDDEL
MATIERE D'ETANCHEITE
SEALING AGENT
ABDICHTUNG

MONTAGEVOLGORDE
L 'ORDRE DE MONTAGE
THE ORDER OF ASSEMBLY
MONTAGEREIHENFOLGE 1 2 3 .

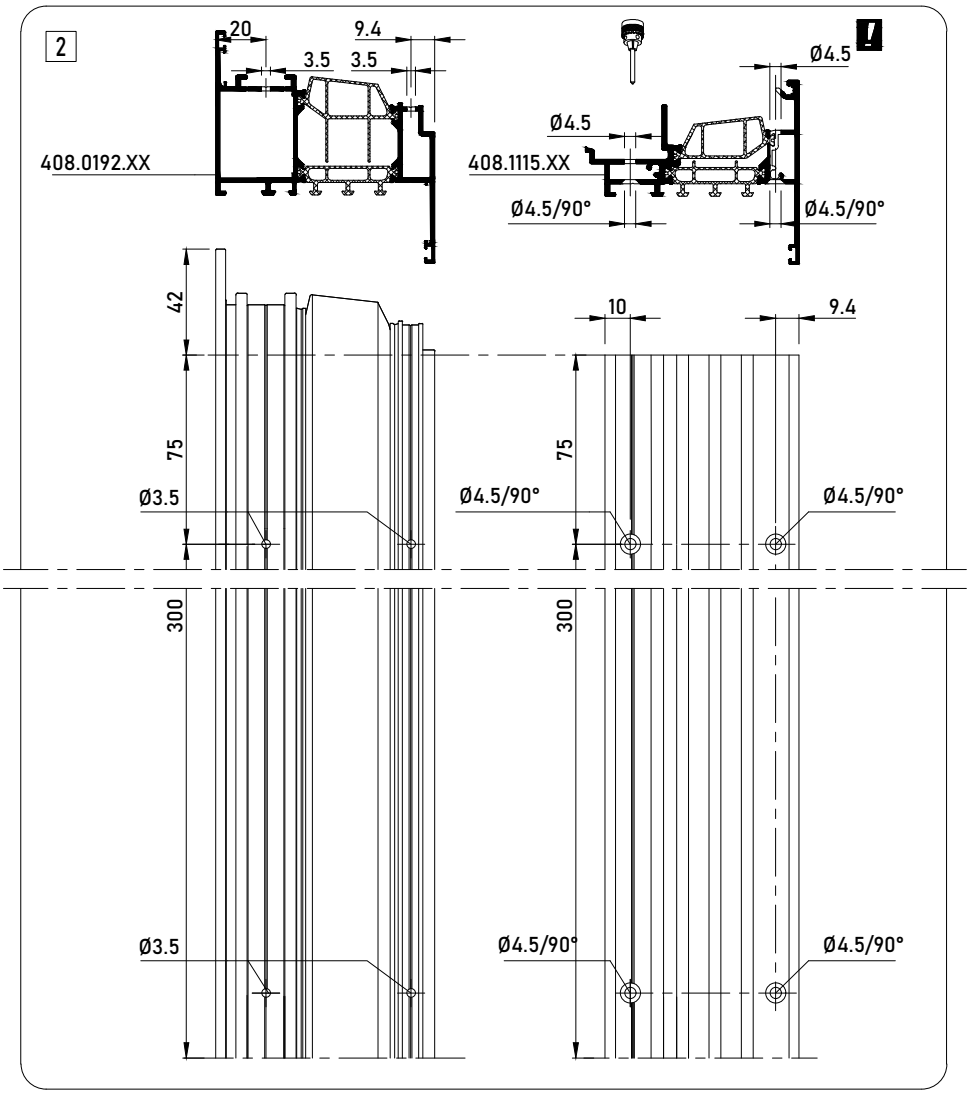

X	DICHTINGSMIDDEL MATIERE D'ETANCHEITE SEALING AGENT ABDICHTUNG

MONTAGEVOLGORDE L'ORDRE DE MONTAGE THE ORDER OF ASSEMBLY MONTAGEREIHENFOLGE	1 2 3 .

3

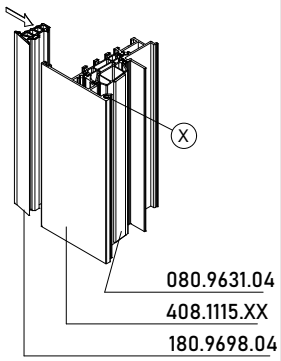

X DICHTINGSMIDDEL
MATIERE D'ETANCHEITE
SEALING AGENT
ABDICHTUNG

MONTAGEVOLGORDE
L 'ORDRE DE MONTAGE
THE ORDER OF ASSEMBLY
MONTAGEREIHENFOLGE
1 2 3 .

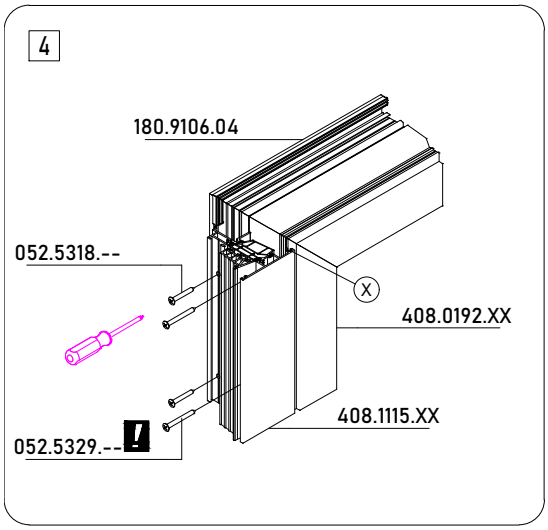

Alleen voor
Seulement pour
Only for
Nur für

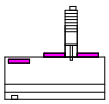

X	DICHTINGSMIDDEL MATIERE D'ETANCHEITE SEALING AGENT ABDICHTUNG

MONTAGEVOLGORDE L'ORDRE DE MONTAGE THE ORDER OF ASSEMBLY MONTAGEREIHENFOLGE	1 2 3 .

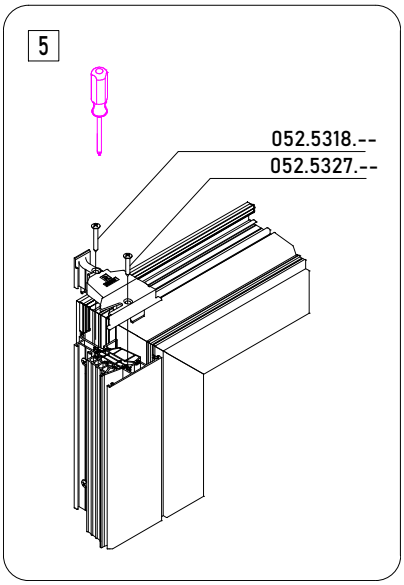

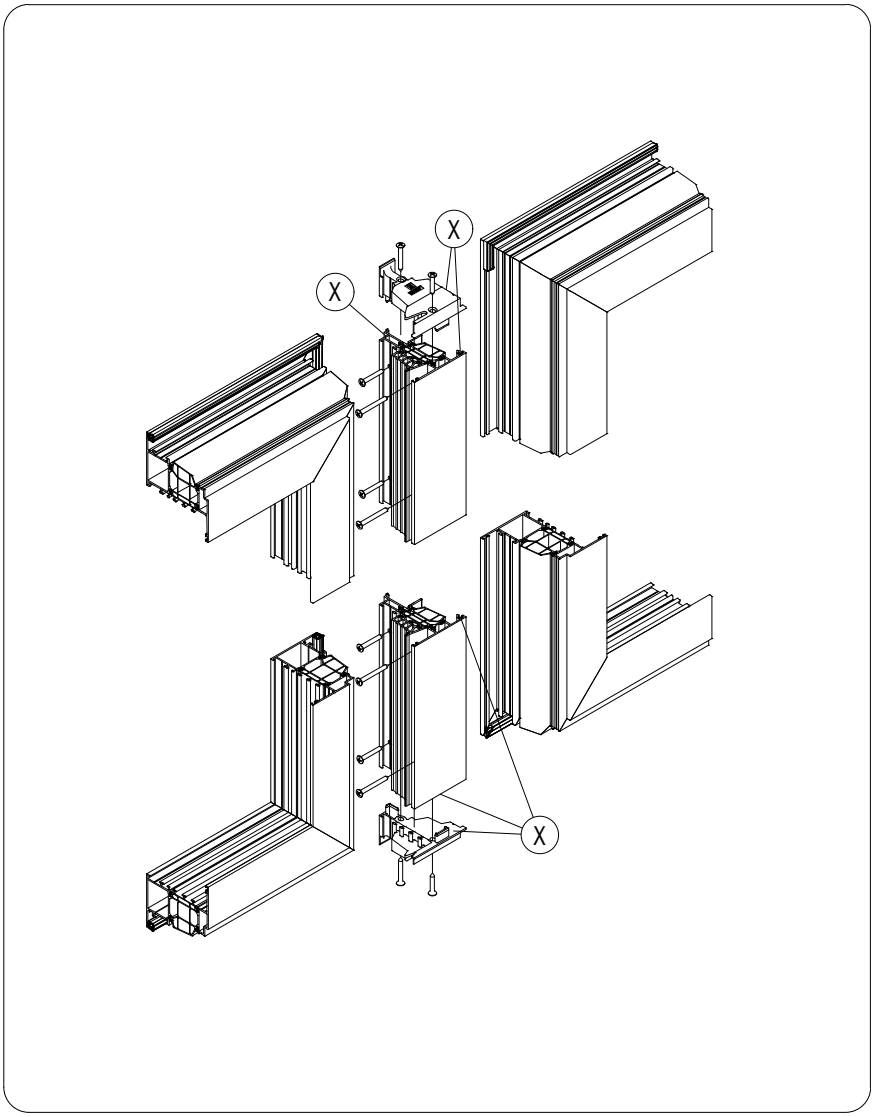
X
X
X

DOUBLE CASEMENT

ASSEMBLY DOUBLE CASEMENT PROFILE

MASTERLINE 8-Fu

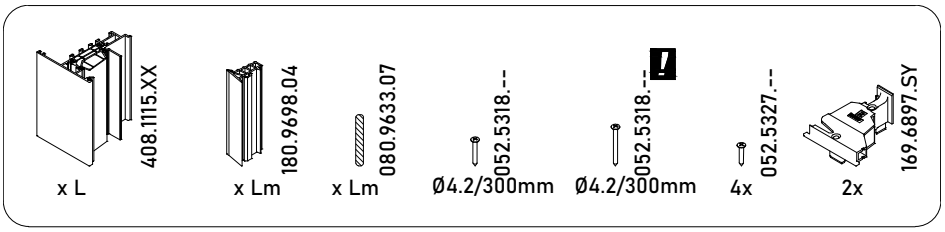

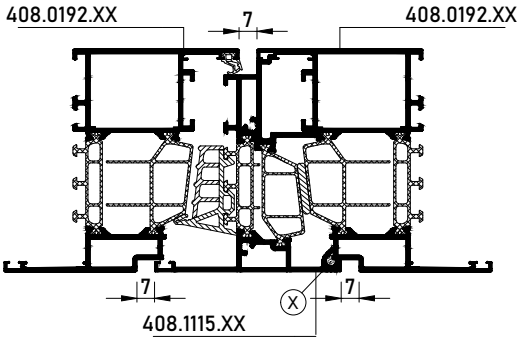

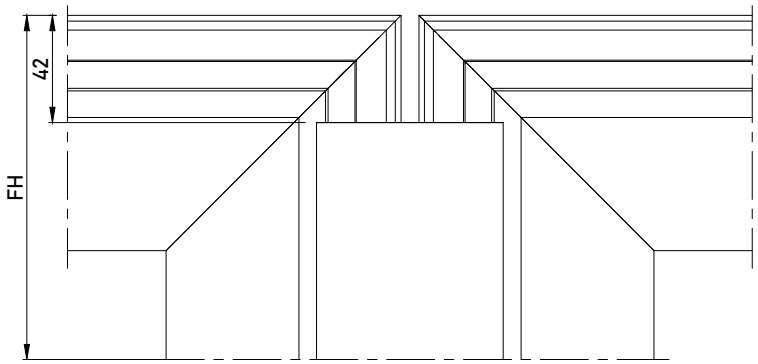

X	DICHTINGSMIDDEL MATIERE D'ETANCHEITE SEALING AGENT ABDICHTUNG

MONTAGEVOLGORDE L 'ORDRE DE MONTAGE THE ORDER OF ASSEMBLY MONTAGEREIHENFOLGE	1 2 3 .

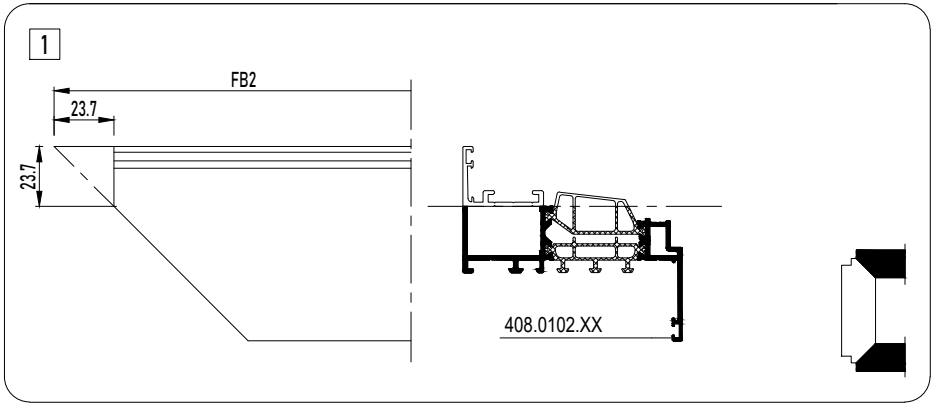

X DICHTINGSMIDDEL
MATIERE D'ETANCHEITE
SEALING AGENT
ABDICHTUNG

MONTAGEVOLGORDE
L 'ORDRE DE MONTAGE
THE ORDER OF ASSEMBLY
MONTAGEREIHENFOLGE 1 2 3 .

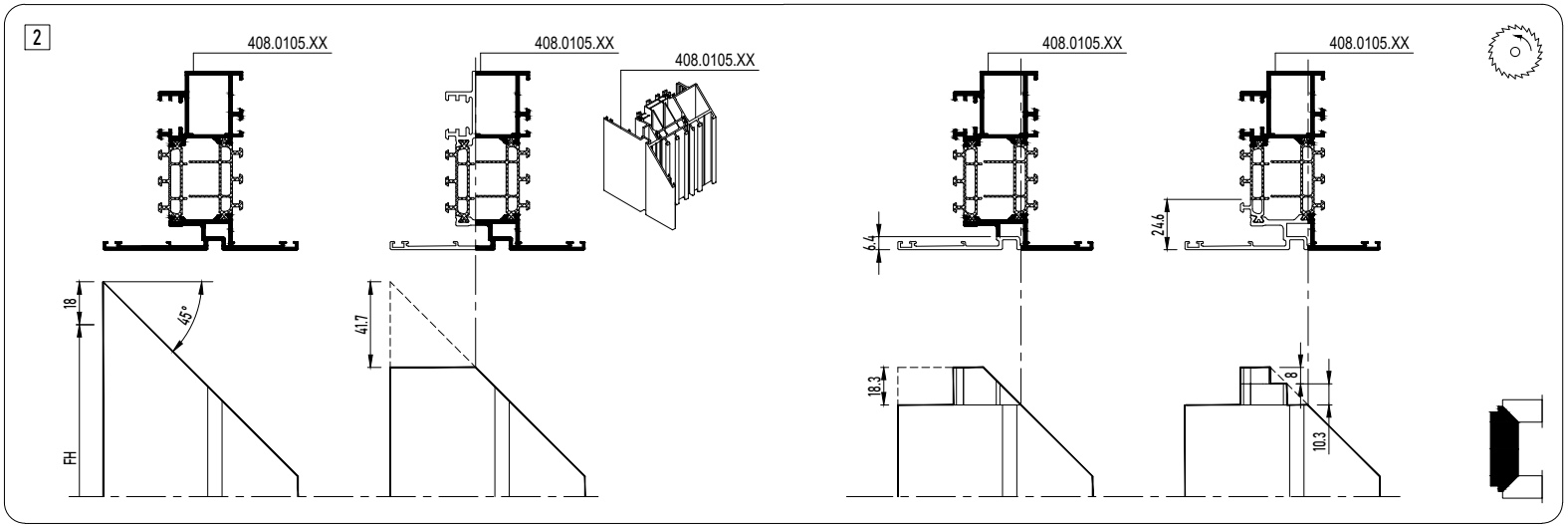

(X)	DICHTINGSMIDDEL MATIERE D'ETANCHEITE SEALING AGENT ABDICHTUNG

MONTAGEVOLGORDE L 'ORDRE DE MONTAGE THE ORDER OF ASSEMBLY MONTAGEREIHENFOLGE	1 2 3 .

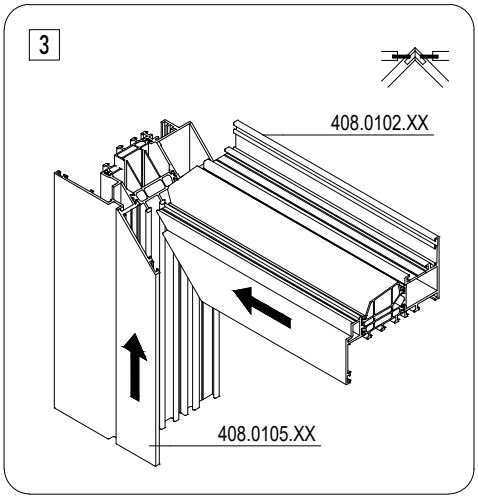

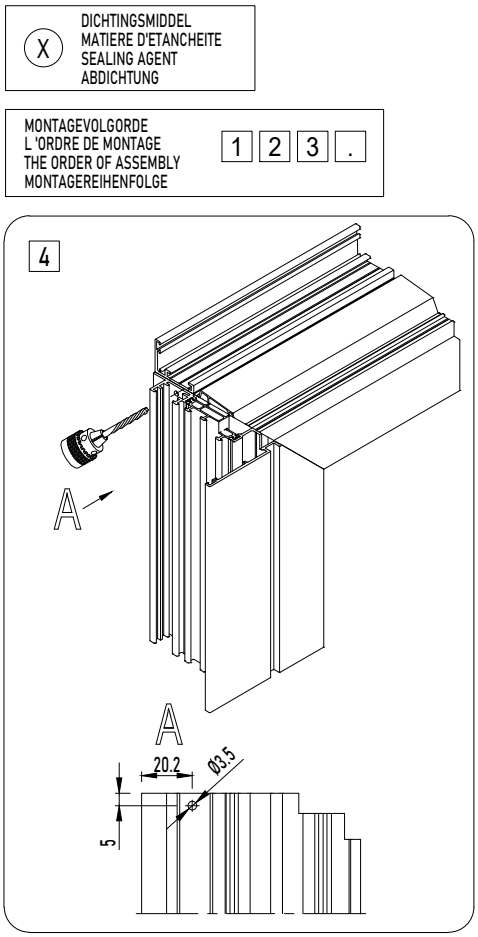
X
DICHTINGSMIDDEL
MATIERE D'ETANCHEITE
SEALING AGENT
ABDICHTUNG
MONTAGEVOLGORDE
L 'ORDRE DE MONTAGE
THE ORDER OF ASSEMBLY
MONTAGEREIHENFOLGE
1 2 3 .
4
A
A
20.2
Ø3.5
5

X	DICHTINGSMIDDEL MATIERE D'ETANCHEITE SEALING AGENT ABDICHTUNG

MONTAGEVOLGORDE L 'ORDRE DE MONTAGE THE ORDER OF ASSEMBLY MONTAGEREIHENFOLGE	1 2 3 .

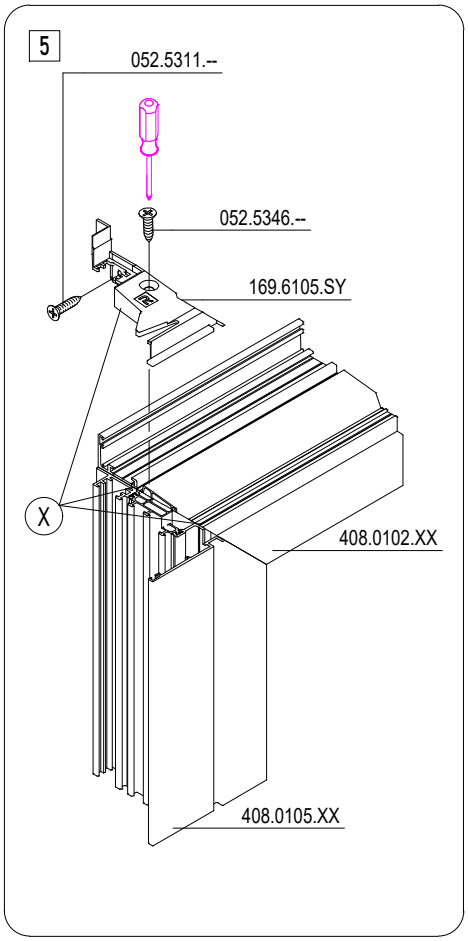

DOUBLE CASEMENT INTEGRATED

INTEGRATED DOUBLE CASEMENT WINDOW

MASTERLINE 8-Fu

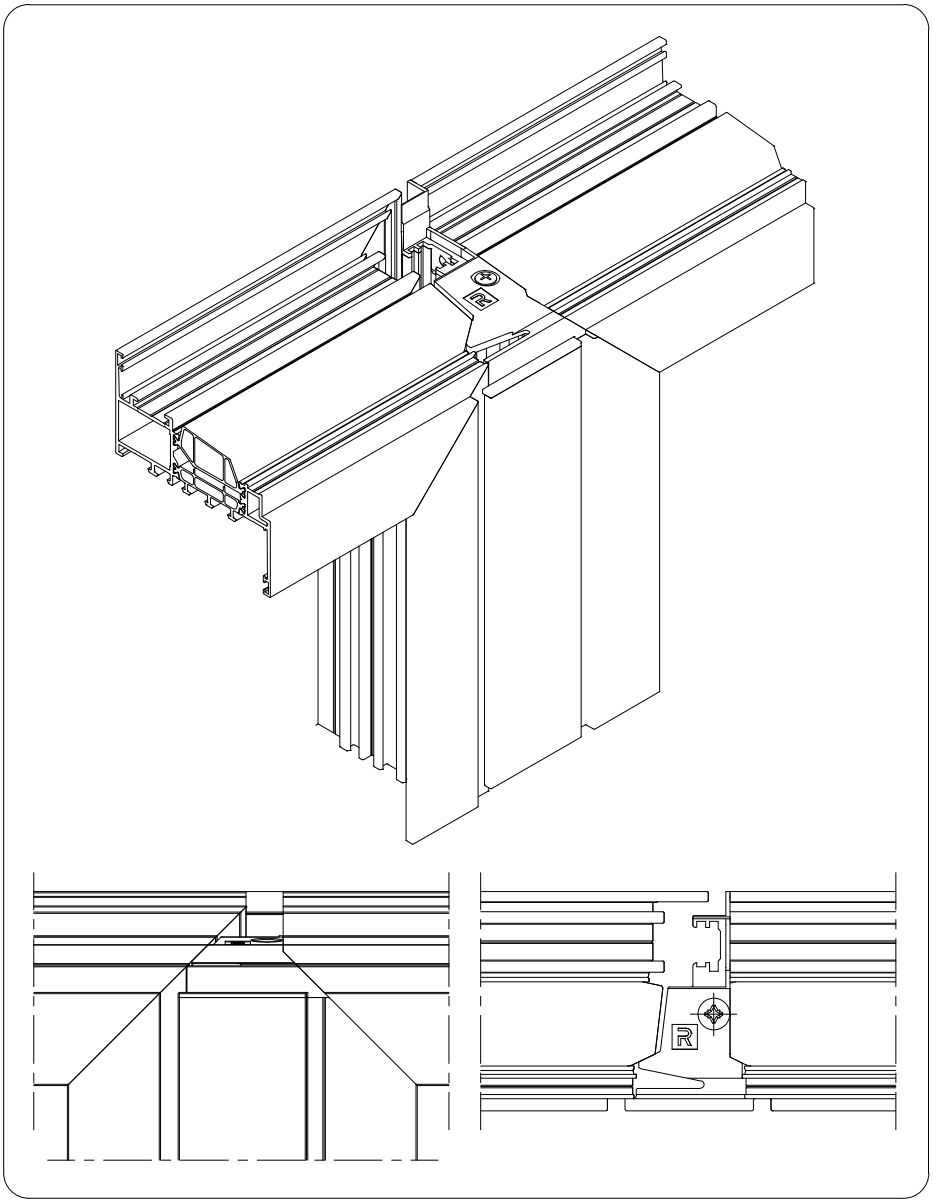

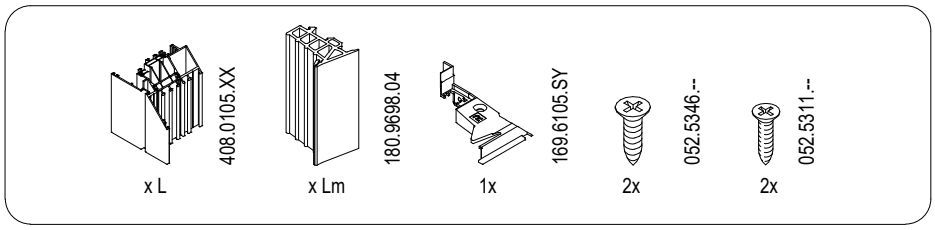
408.0105.XX
x L
180.9698.04
x Lm
169.6105.SY
1x
052.5346.--
2x
052.5311.--
2x

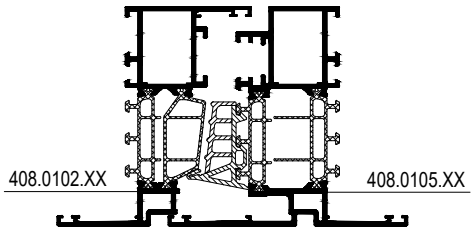
408.0102.XX
408.0105.XX

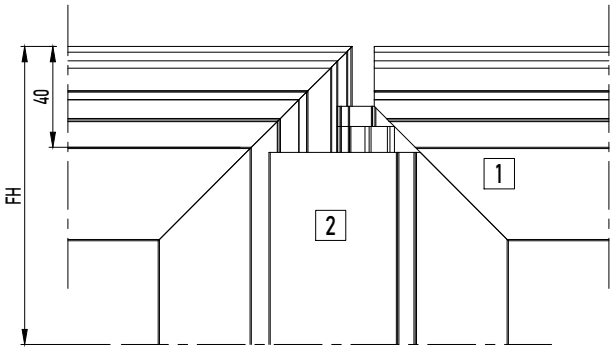
40
FH
1
2

X	DICHTINGSMIDDEL MATIERE D'ETANCHEITE SEALING AGENT ABDICHTUNG

MONTAGEVOLGORDE L 'ORDRE DE MONTAGE THE ORDER OF ASSEMBLY MONTAGEREIHENFOLGE	1 2 3 .

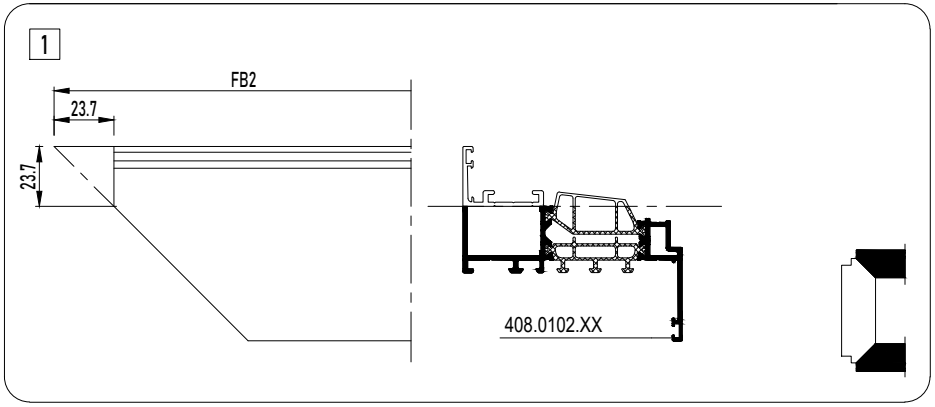

X DICHTINGSMIDDEL
MATIERE D'ETANCHEITE
SEALING AGENT
ABDICHTUNG

MONTAGEVOLGORDE
L 'ORDRE DE MONTAGE
THE ORDER OF ASSEMBLY
MONTAGEREIHENFOLGE 1 2 3 .

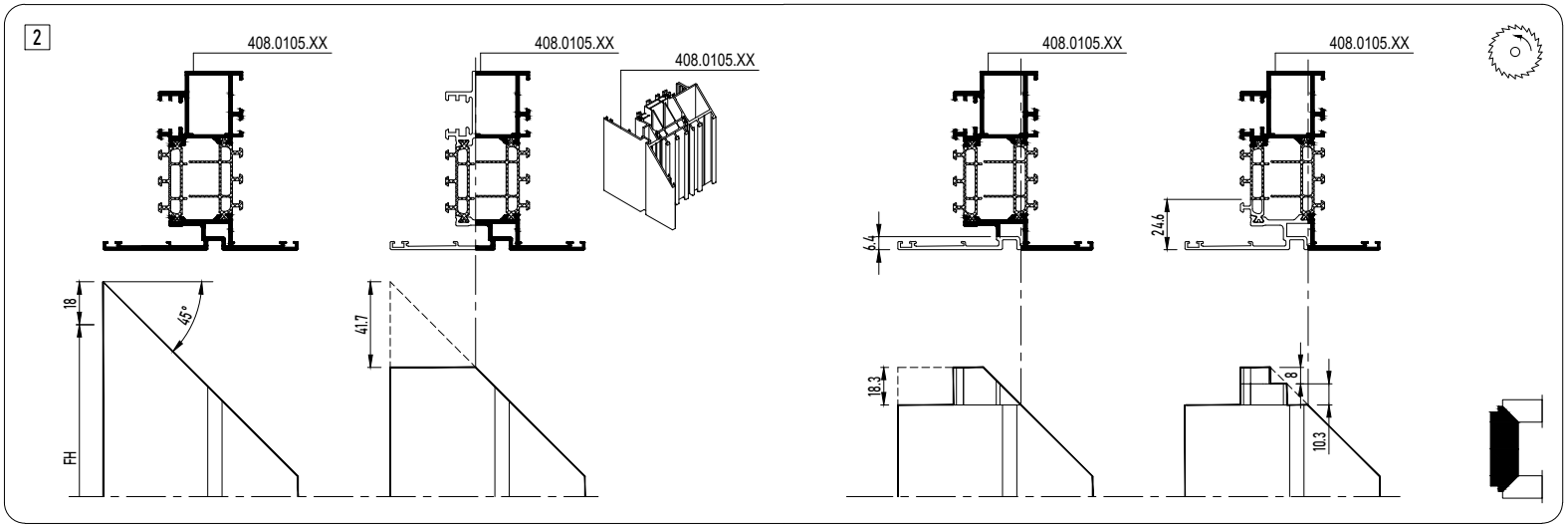

X	DICHTINGSMIDDEL MATIERE D'ETANCHEITE SEALING AGENT ABDICHTUNG

MONTAGEVOLGORDE L 'ORDRE DE MONTAGE THE ORDER OF ASSEMBLY MONTAGEREIHENFOLGE	1 2 3 .

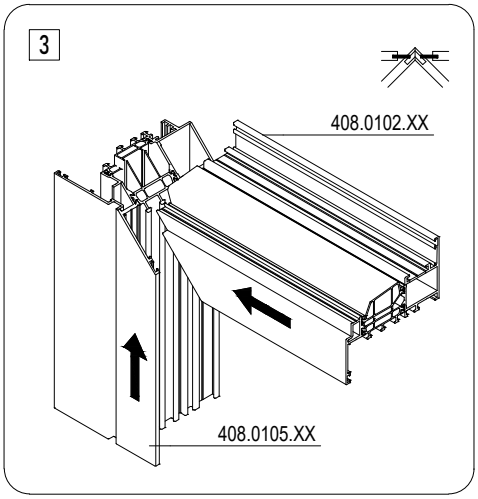

X DICHTINGSMIDDEL
MATIERE D'ETANCHEITE
SEALING AGENT
ABDICHTUNG

MONTAGEVOLGORDE
L 'ORDRE DE MONTAGE
THE ORDER OF ASSEMBLY
MONTAGEREIHENFOLGE
1 2 3 .

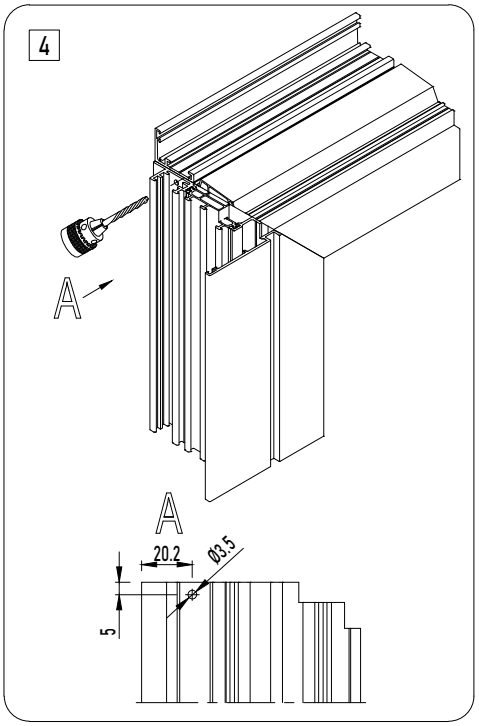

X	DICHTINGSMIDDEL MATIERE D'ETANCHEITE SEALING AGENT ABDICHTUNG

MONTAGEVOLGORDE L 'ORDRE DE MONTAGE THE ORDER OF ASSEMBLY MONTAGEREIHENFOLGE	1 2 3 .

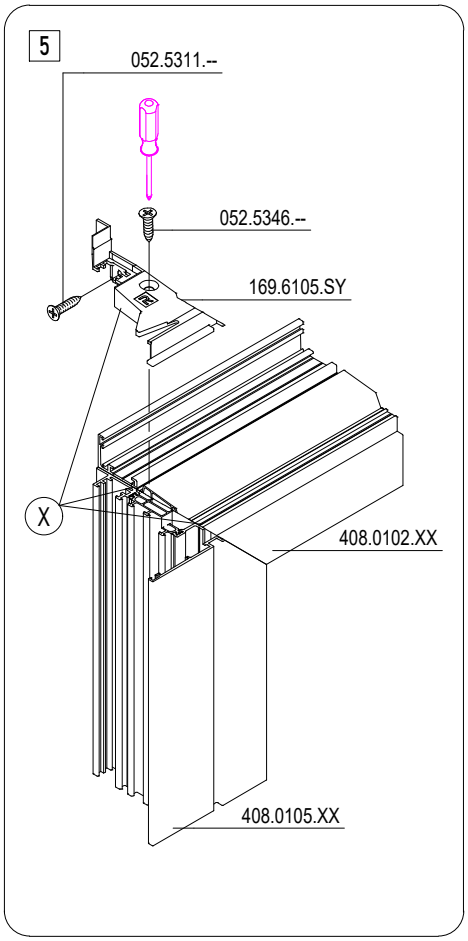

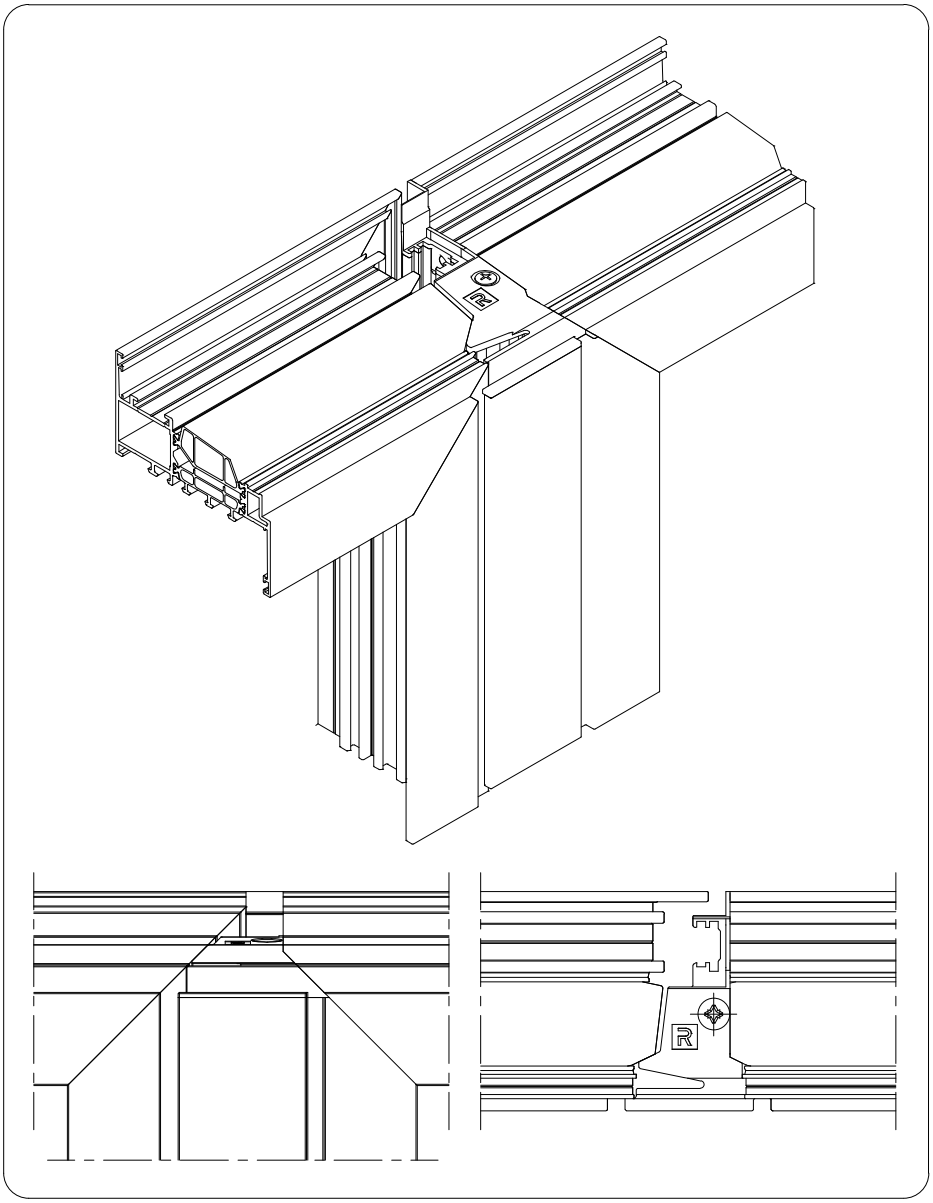

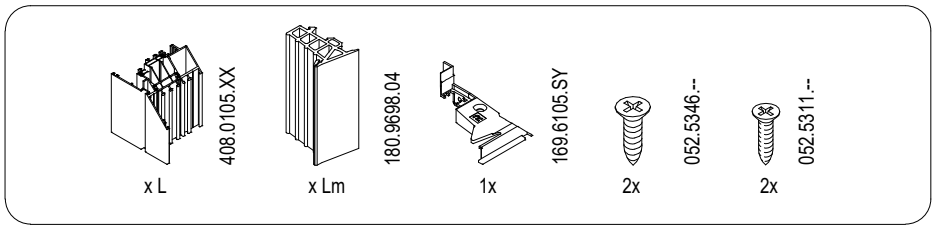
408.0105.XX
x L
180.9698.04
x Lm
169.6105.SY
1x
052.5346.--
2x
052.5311.--
2x

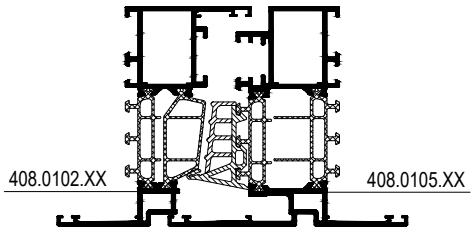
408.0102.XX
408.0105.XX

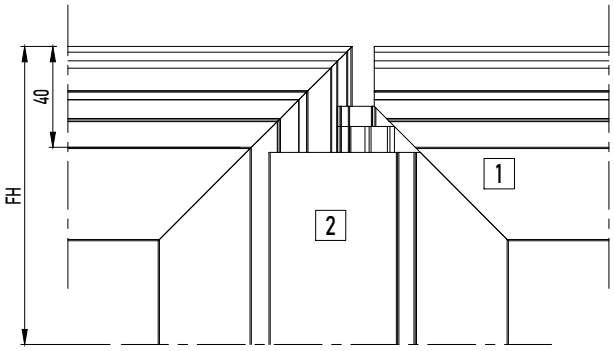
40
FH
1
2

MILLING CHANGEOVER PROFILE PIVOT DOOR

SCREW CORNER CONNECTION CHANGEOVER PROFILE

MASTERLINE 8-Fu

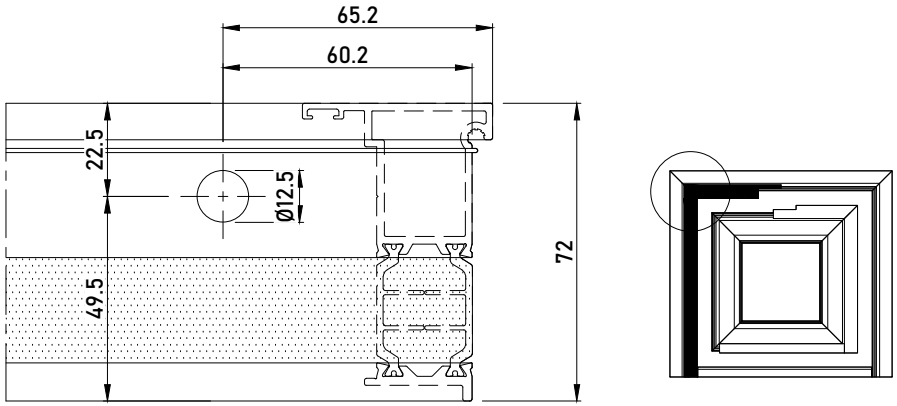

MILLING CHANGEOVER PROFILE PIVOT DOOR

SCREW CORNER CONNECTION CHANGEOVER PROFILE

MASTERLINE 8-Fu

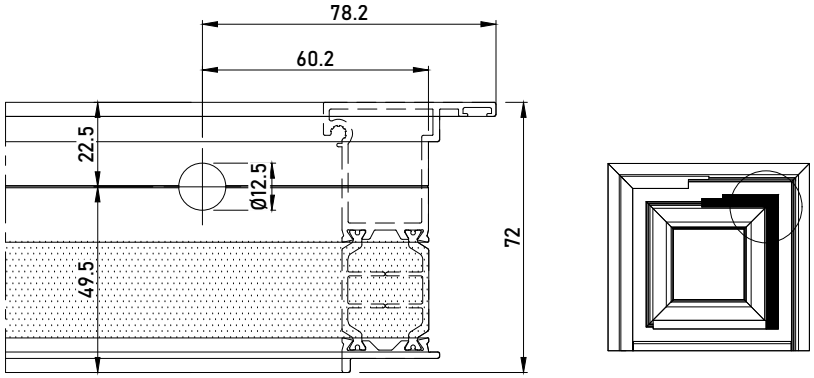

MILLING CHANGEOVER PROFILE PIVOT DOOR

SCREW CORNER CONNECTION CHANGEOVER PROFILE

MASTERLINE 8-Fu

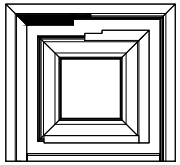

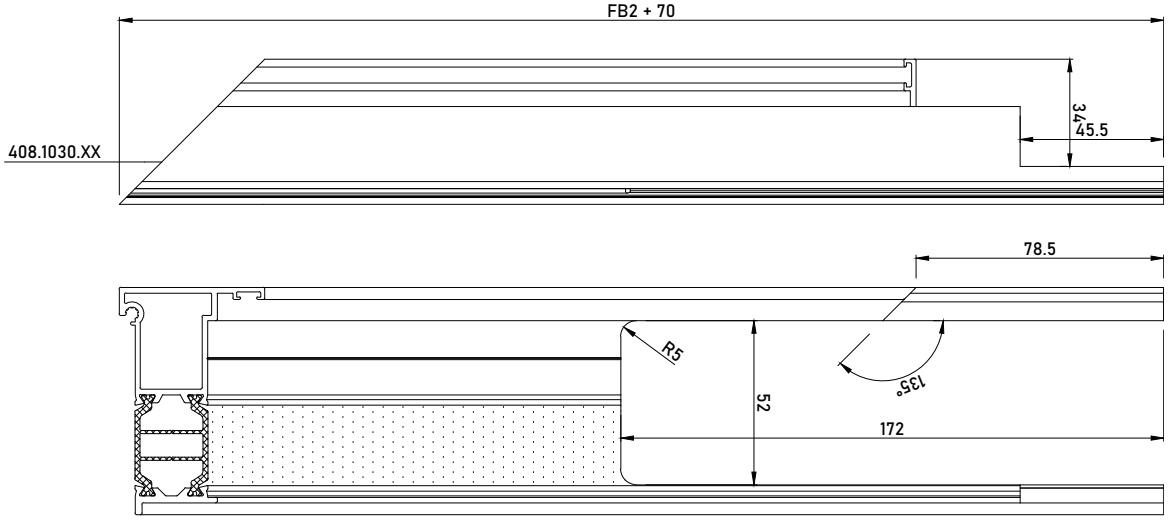

MILLING CHANGEOVER PROFILE PIVOT DOOR

SCREW CORNER CONNECTION CHANGEOVER PROFILE

MASTERLINE 8-Fu

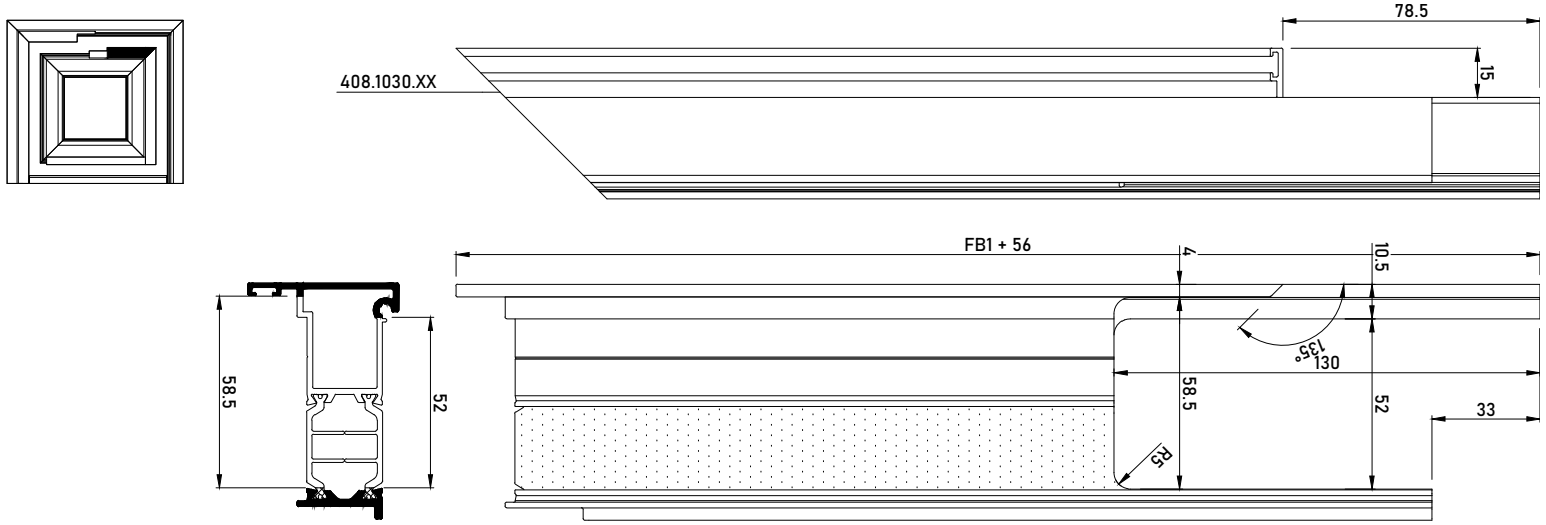

DRAINAGE NO TOOL VENTILATION VENT

DRAINAGE VENTILATION VENT

MASTERLINE 8-Fu

MILLING BEFORE ASSEMBLY

169.6880.SY

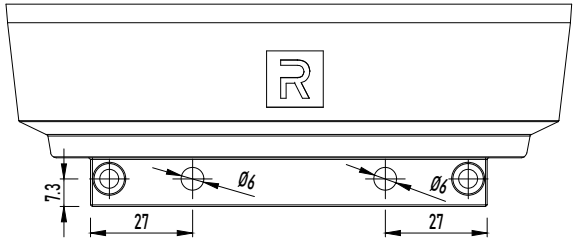

169.6884.SY

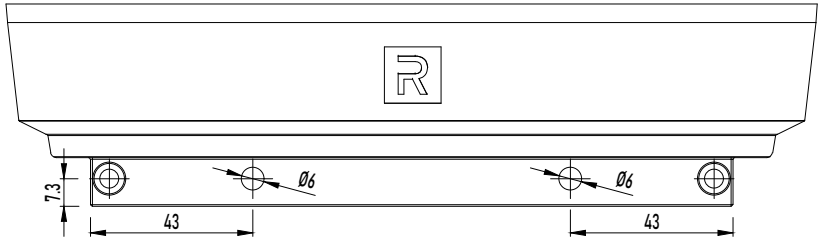

DRAINAGE NO TOOL VENTILATION VENT

DRAINAGE VENTILATION VENT

MASTERLINE 8-Fu

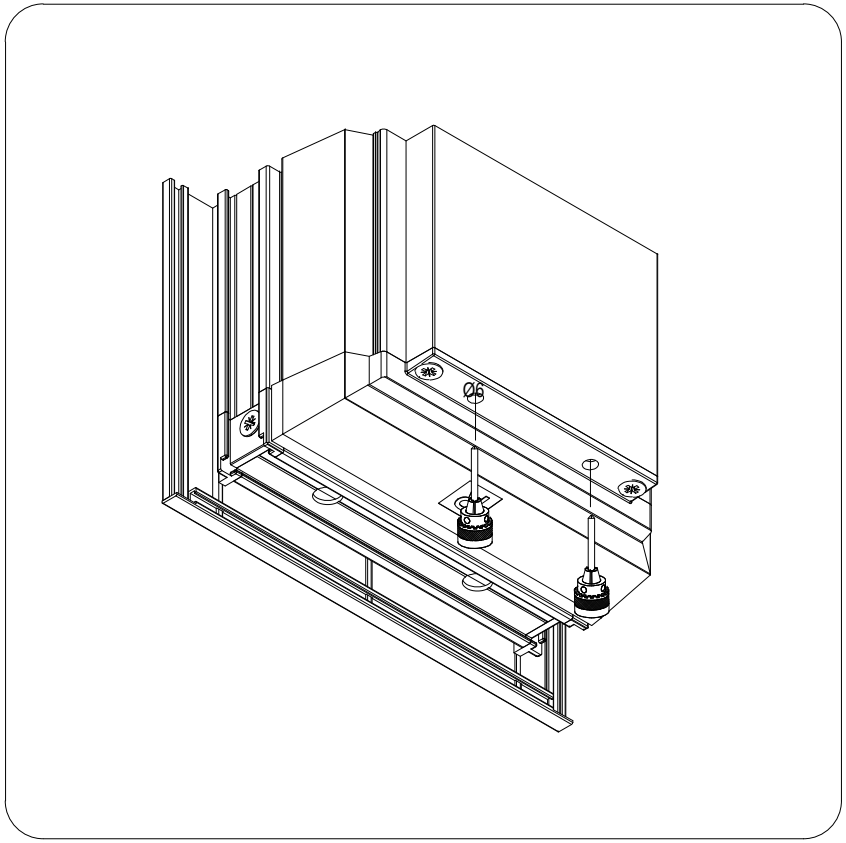

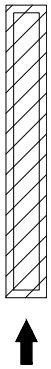

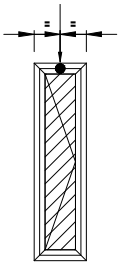

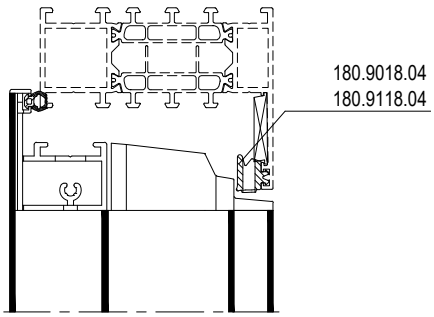

DECOMPRESSIE VENTILATION VLEUGEL
DECOMPRESSION VENTILATION OUVRANT
DECOMPRESSION VENTILATION VENT
DEKOMPRESSION VENTILATION FLEUGEL

MILLING HINGE VENTILATION VENT

VENTILATION VENT

MASTERLINE 8-Fu

SCHARNIERZIJDE DR LINKS 400<FB<1400 COTE DE CHARNIERES FO GAUCHE 400<FB<1400 HINGE SIDE SH LEFT 400<FB<1400 BANDSEITE DF LINKS 400<FB<1400	SCHARNIERZIJDE DR RECHTS 400<FB<1400 COTE DE CHARNIERES FO DROITE 400<FB<1400 HINGE SIDE SH RIGHT 400<FB<1400 BANDSEITE DF RECHTS 400<FB<1400	AFWERKINGSSTUK PIECE DE FINITION FINISHING PIECE AUSFUEHRUNGSSTUECK
060.9008.--	060.9009.--	169.6750.XX
		169.6752.XX

060.9008.--

169.6750.XX
(169.6752.XX)

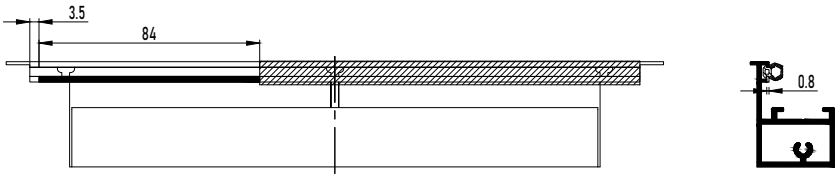

060.9009.--

169.6750.XX
(169.6752.XX)

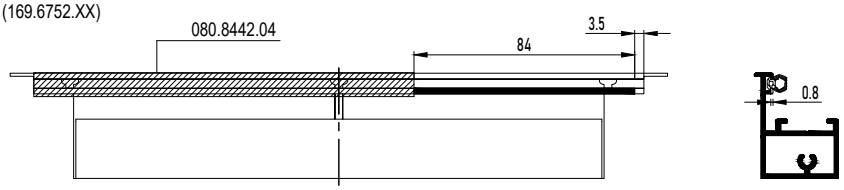

MONTAGEVOLGORDE
L 'ORDRE DE MONTAGE
THE ORDER OF ASSEMBLY
MONTAGEREIHENFOLGE

1 2 3 .

MILLING HINGE VENTILATION VENT

VENTILATION VENT

MASTERLINE 8-Fu

MONTAGEVOLGORDE L 'ORDRE DE MONTAGE THE ORDER OF ASSEMBLY MONTAGEREIHENFOLGE	1 2 3 .

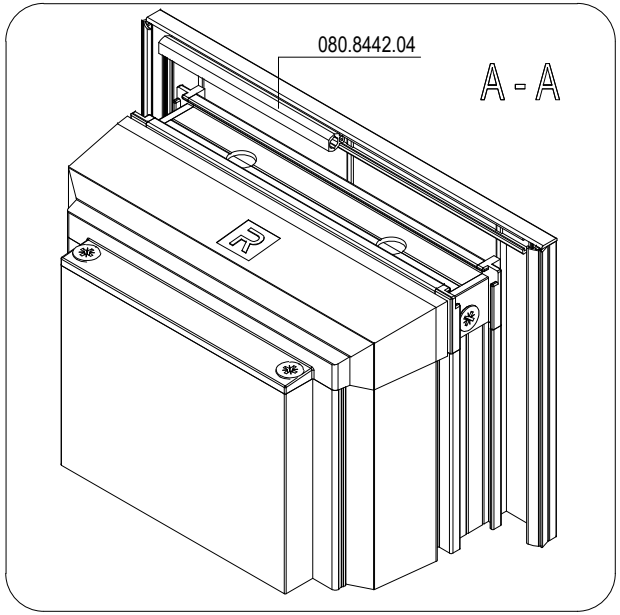

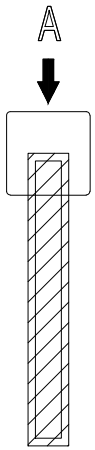

ASSEMBLY END PIECE VENTILATION VENT

END PIECES VENTILATION VENT

MASTERLINE 8-Fu

VLEUGEL VENTILATIERAAM OUVRANT FENETRE DE VENTILATION VENTILATION VENT VENT VENTILATION WINDOW		EINDSTUKKEN PIECES FINALES END PIECES ENDKAPPEN	AFWERKINGSSTUK PIECE DE FINITION FINISHING PIECE AUSFUEHRUNGSSTUECK	ISOLEREND VULSTUK PIECE DE REMPLISSAGE ISOLEE INSULATING FILLING PIECE ISOLIERENDES FUELLSTUECK
STANDARD	HI+	STANDARD / HI+	STANDARD / HI+	HI+
408.0701.XX 508.0701.XX	508.0701.XX	169.6880.SY	169.6750.XX	187.0701.07
408.0703.XX 508.0703.XX	508.0703XX	169.6884.SY	169.6752.XX	187.0703.07

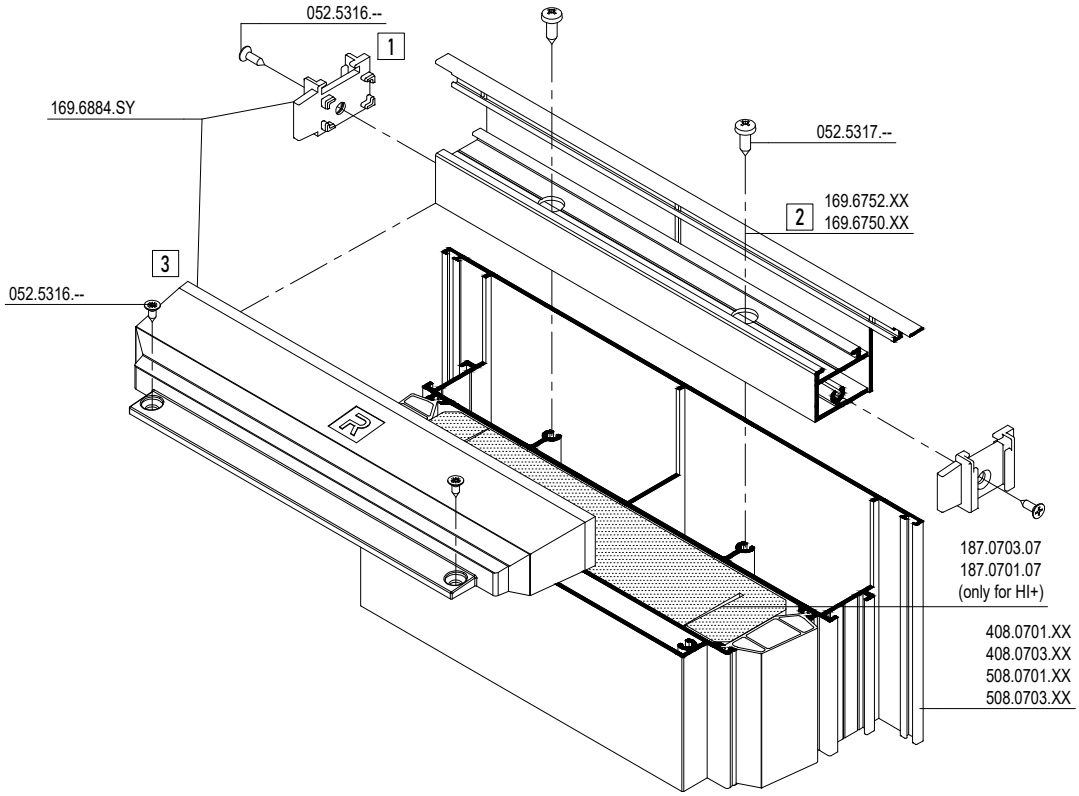

ASSEMBLY END PIECE VENTILATION VENT

END PIECES VENTILATION VENT

MASTERLINE 8-Fu

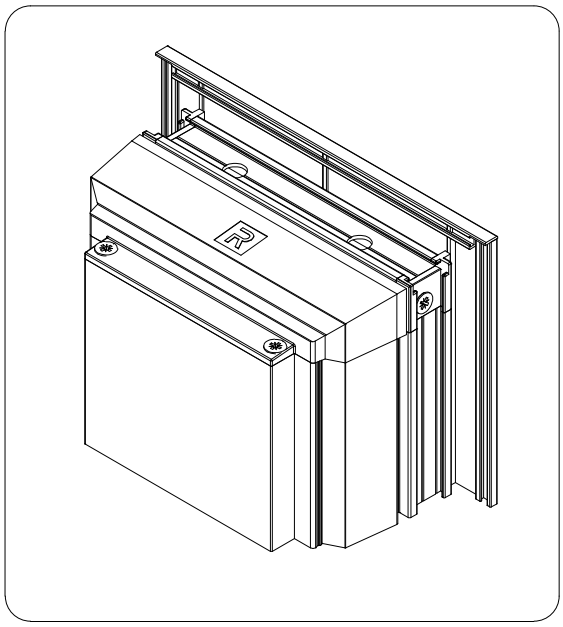

MONTAGEVOLGORDE L 'ORDRE DE MONTAGE THE ORDER OF ASSEMBLY MONTAGEREIHENFOLGE	1 2 3 .

MILLING END PIECE VENTILATION VENT

END PIECES VENTILATION VENT

MASTERLINE 8-Fu



408.0701.XX
408.0703.XX
508.0701.XX
508.0703.XX

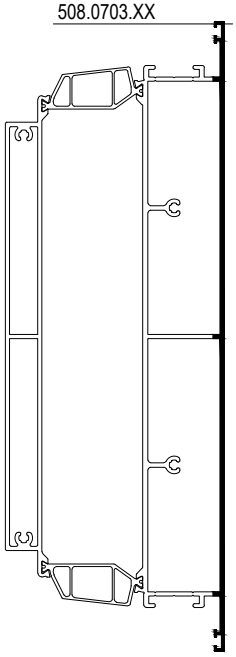

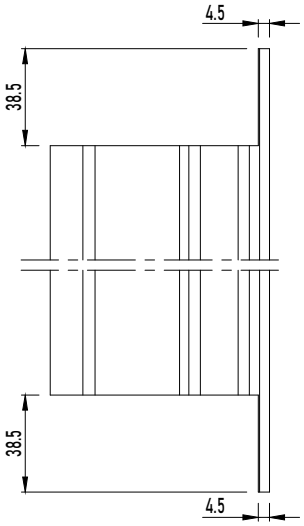

MONTAGEVOLGORDE L 'ORDRE DE MONTAGE THE ORDER OF ASSEMBLY MONTAGEREIHENFOLGE	1 2 3 .

MILLING END PIECE VENTILATION VENT

END PIECES VENTILATION VENT

MASTERLINE 8-Fu

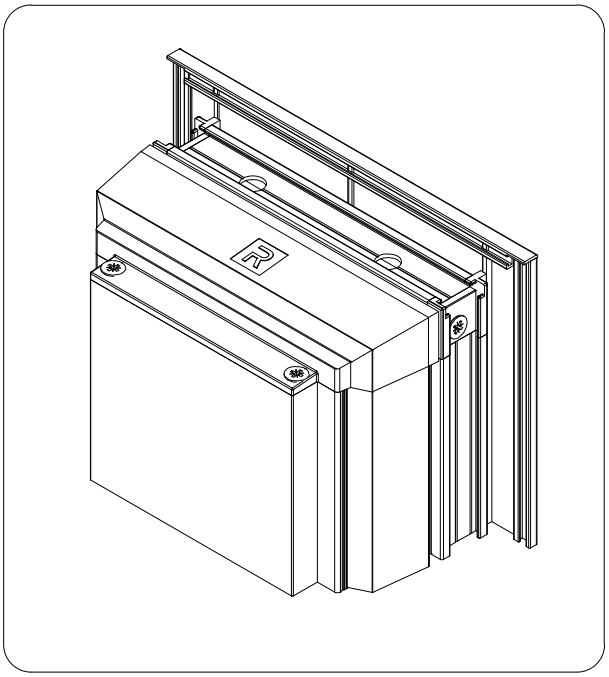

ASSEMBLY INSULATION GASKET (HI) VENTILATION VENT

VENTILATION VENT HI+

MASTERLINE 8-Fu

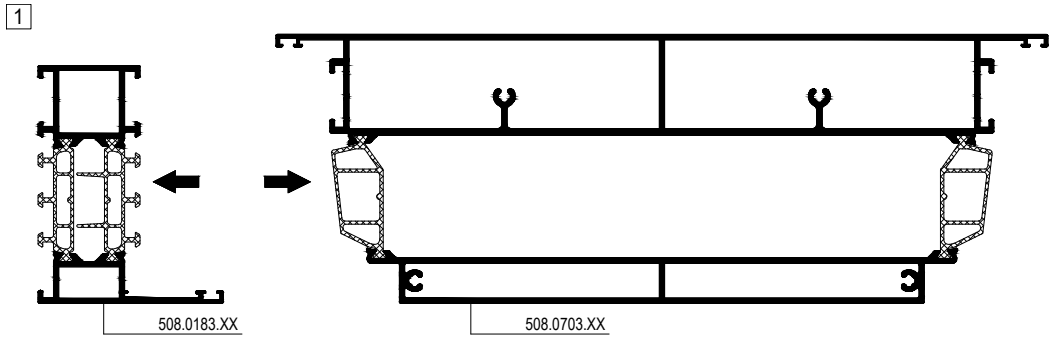

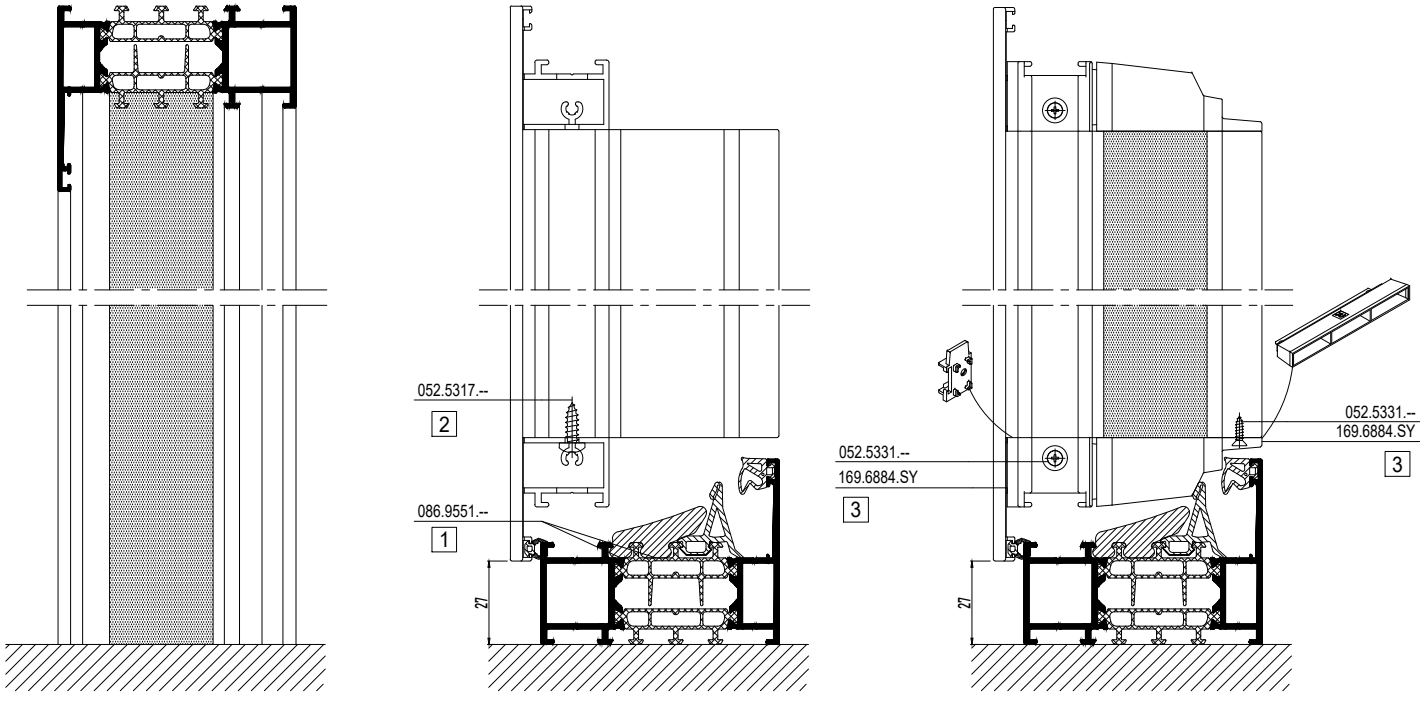

ASSEMBLY INSULATION GASKET (HI) VENTILATION VENT

VENTILATION VENT HI+

MASTERLINE 8-Fu

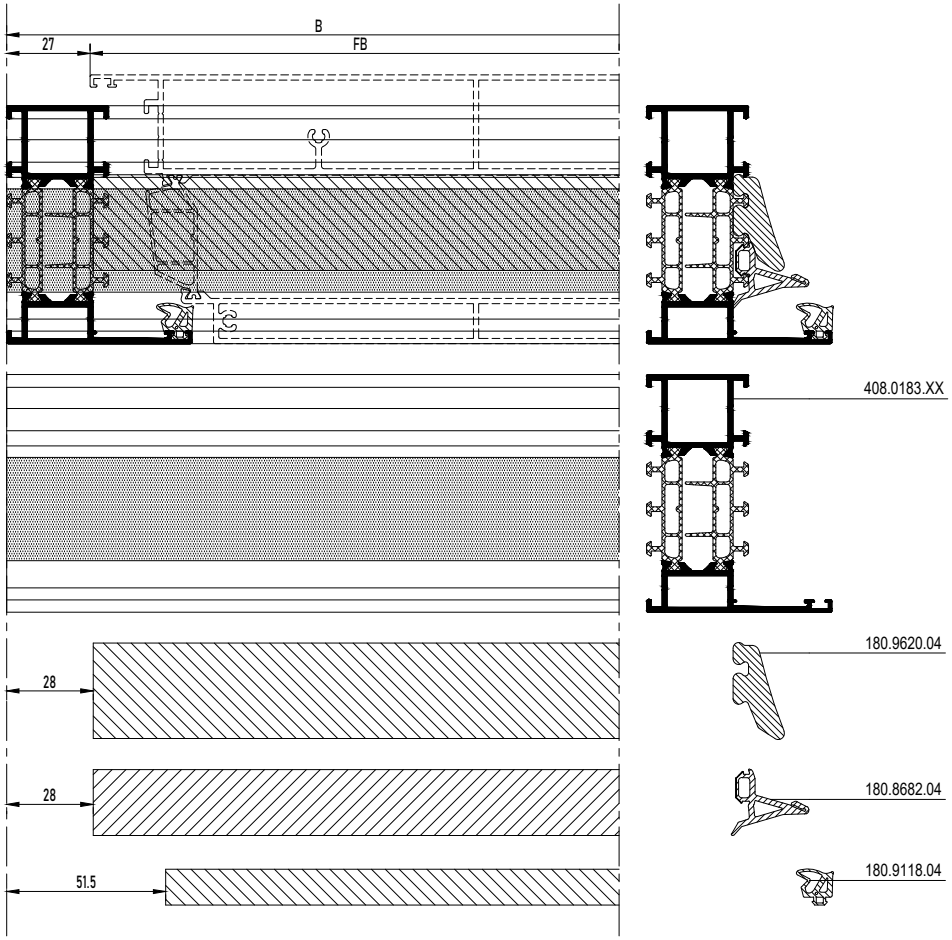



MONTAGEVOLGORDE L'ORDRE DE MONTAGE THE ORDER OF ASSEMBLY MONTAGEREIHENFOLGE	1	2	3	.

DRAINAGE MC DECORATION PROFILE

DECORATION PROFILE

MASTERLINE 8-Fu

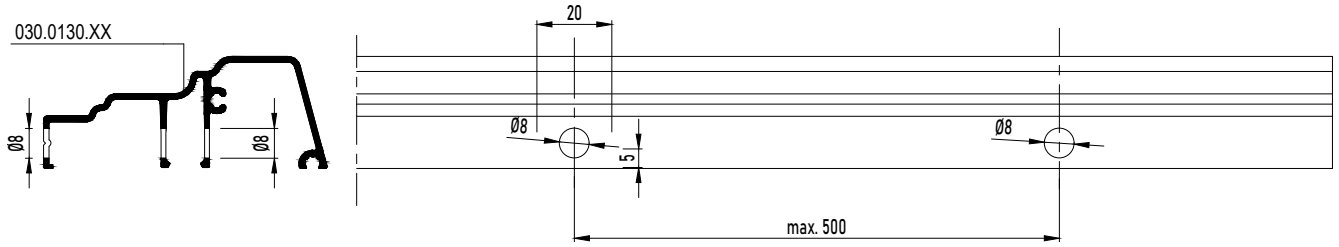

DRAINAGE MC DECORATION PROFILE

DECORATION PROFILE

MASTERLINE 8-Fu

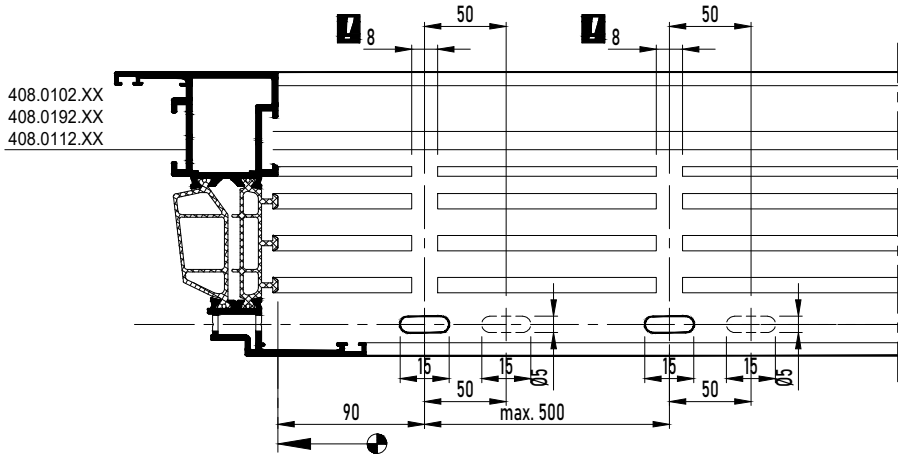

DRAINAGE MC DECORATION PROFILE

DECORATION PROFILE

MASTERLINE 8-Fu

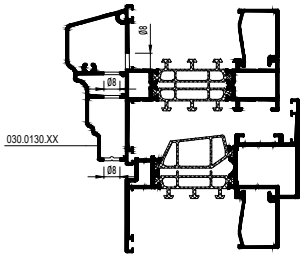

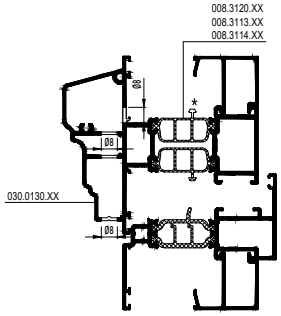

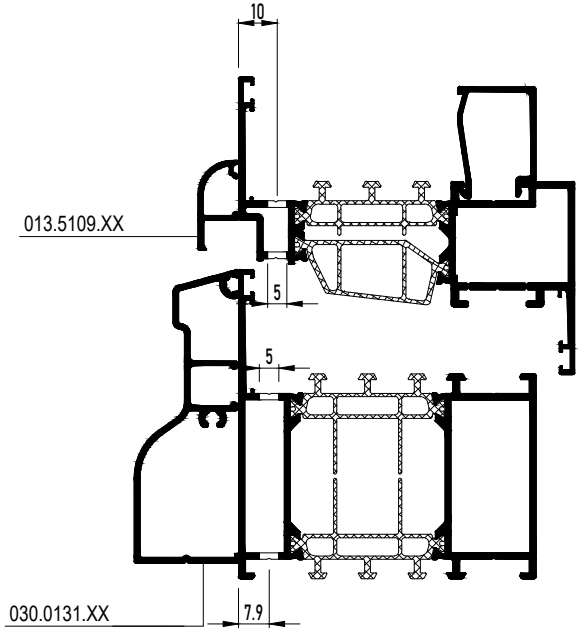

DRAINAGE MFPT DECORATION PROFILE

DECORATION PROFILE

MASTERLINE 8-Fu

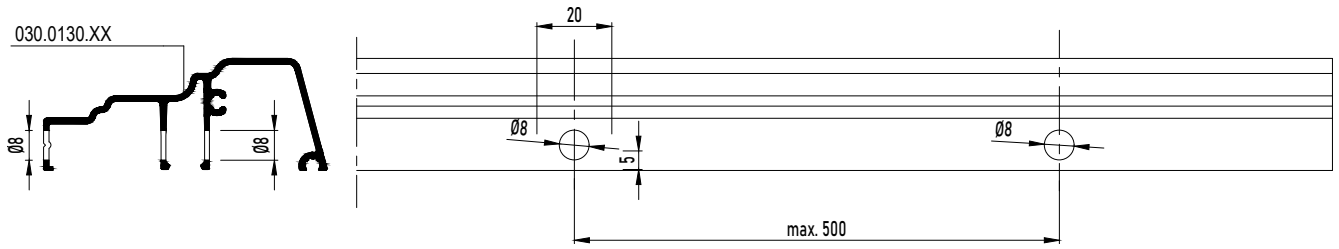

DRAINAGE MFPT DECORATION PROFILE

DECORATION PROFILE

MASTERLINE 8-Fu

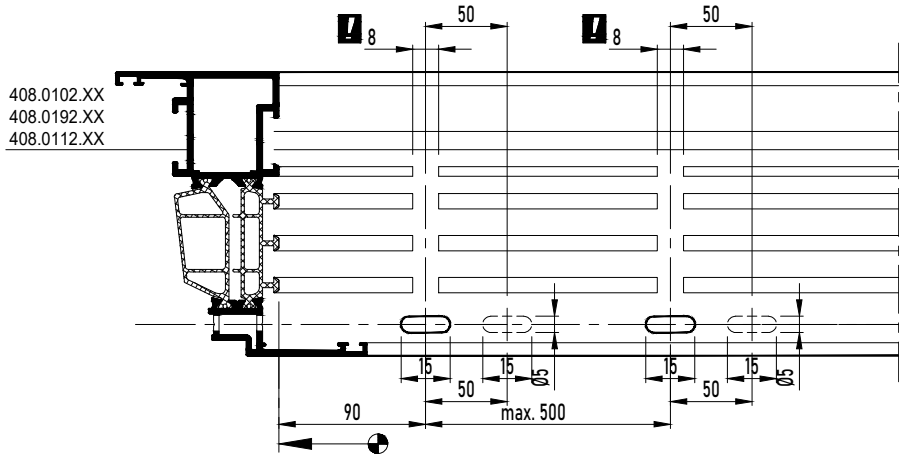

DRAINAGE MFPT DECORATION PROFILE

DECORATION PROFILE

MASTERLINE 8-Fu

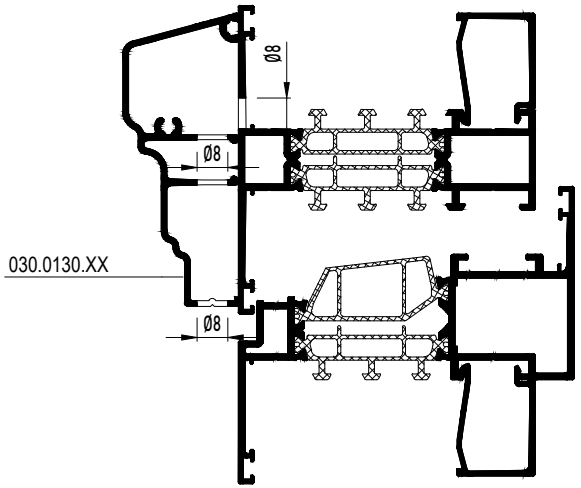

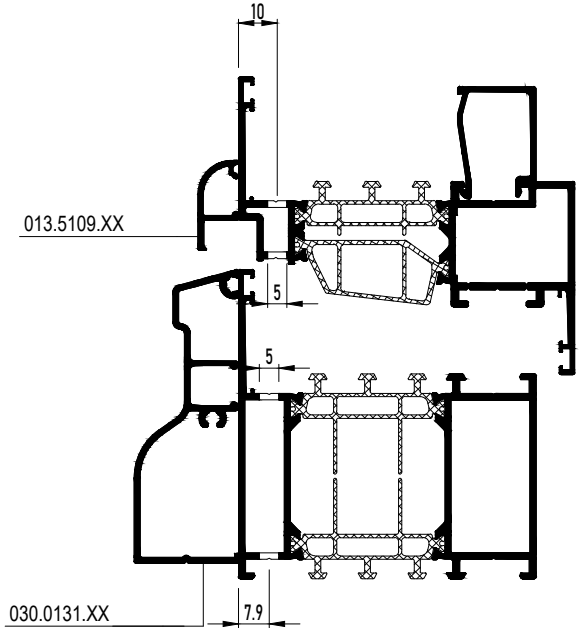

DRAINAGE CR DECORATION PROFILE

DECORATION PROFILE

MASTERLINE 8-Fu

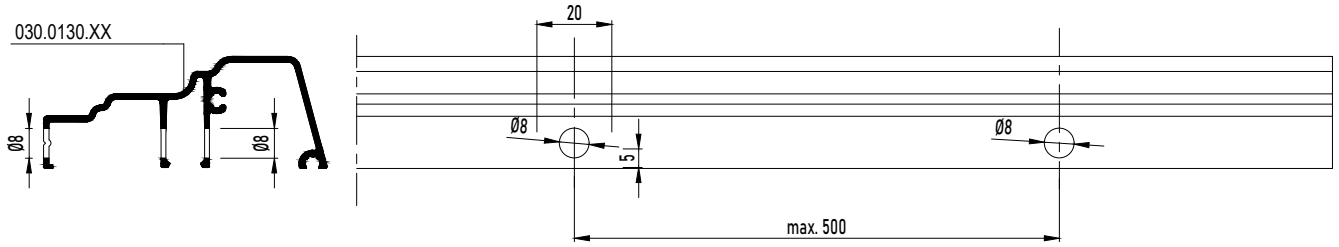

DRAINAGE CR DECORATION PROFILE

DECORATION PROFILE

MASTERLINE 8-Fu

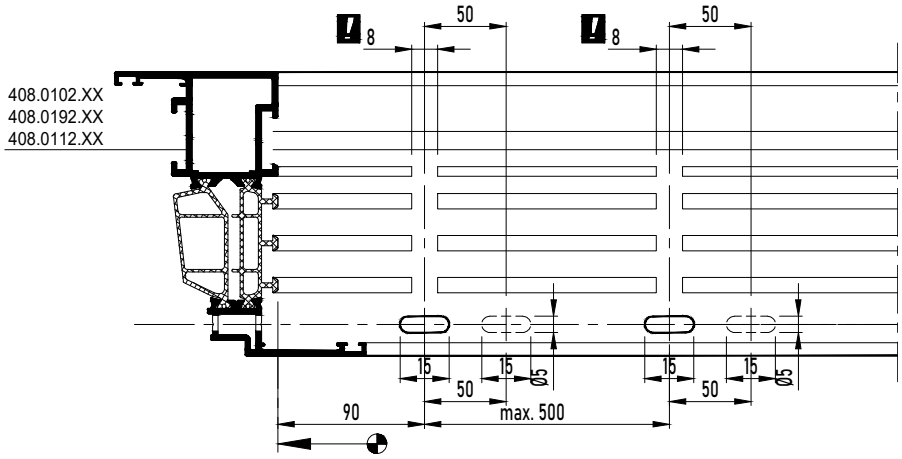

DRAINAGE CR DECORATION PROFILE

DECORATION PROFILE

MASTERLINE 8-Fu

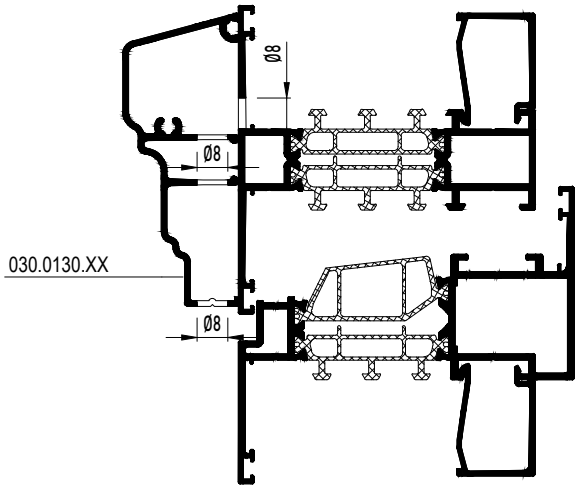

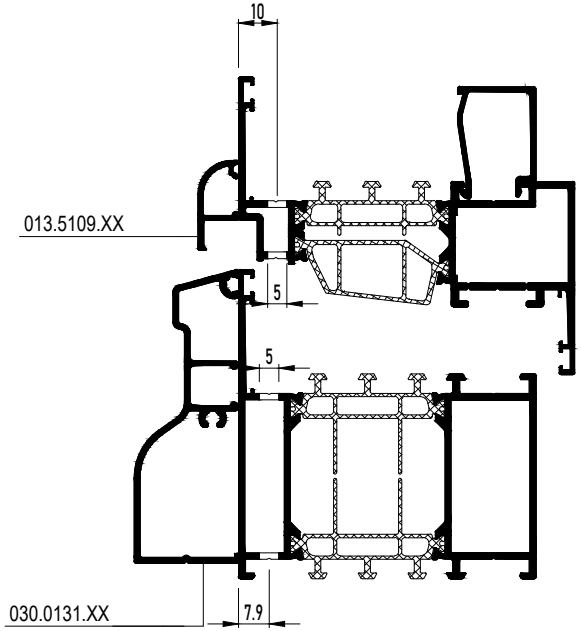

NAILING FIN

NAILING FIN

MASTERLINE 8-Fu

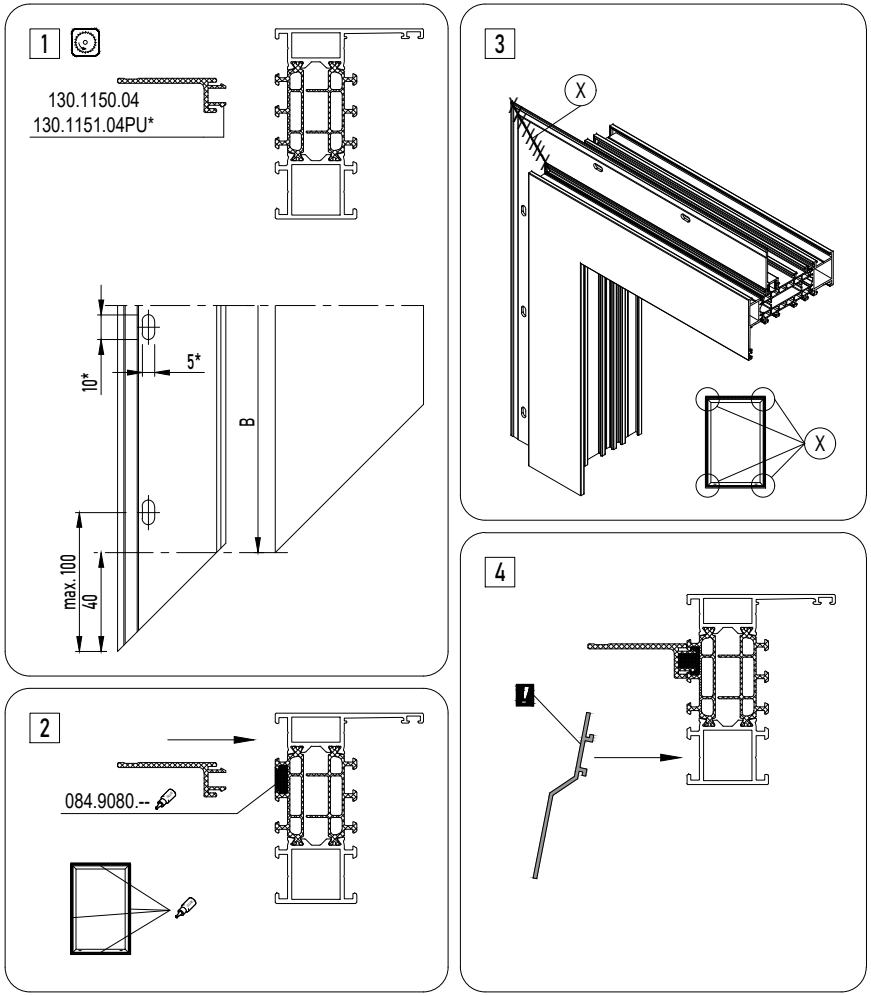

130.1150.04 / 130.1151.04PU --› ENKEL VOOR VERBETERDE WATERDICHTHEID
130.1150.04 / 130.1151.04PU --› UNIQUEMENT POUR AIDER À L'IMPERMÉABILISATION
130.1150.04 / 130.1151.04PU --› ONLY TO AID WITH WATERPROOFING
130.1150.04 / 130.1151.04PU --› NUR ZUR HILFE BEI DER WASSERDICHTUNG

(X) DICHTINGSMIDDEL
MATIERE D'ETANCHEITE
SEALING AGENT
ABDICHTUNG

MONTAGEVOLGORDE
L'ORDRE DE MONTAGE
THE ORDER OF ASSEMBLY
MONTAGEREIHENFOLGE
1 2 3 .

ANKERS ZOALS VEREIST PER INSTALLATIEHANDLEIDING
ANCRAGES SITUÉS COMME REQUIS PAR LE MANUEL D'INSTALLATION
ANCHORS LOCATED AS REQUIRED PER INSTALLATION MANUAL
ANKER ANGEFORDERT NACH INSTALLATIONSANLEITUNG

NAILING FIN

NAILING FIN

MASTERLINE 8-Fu

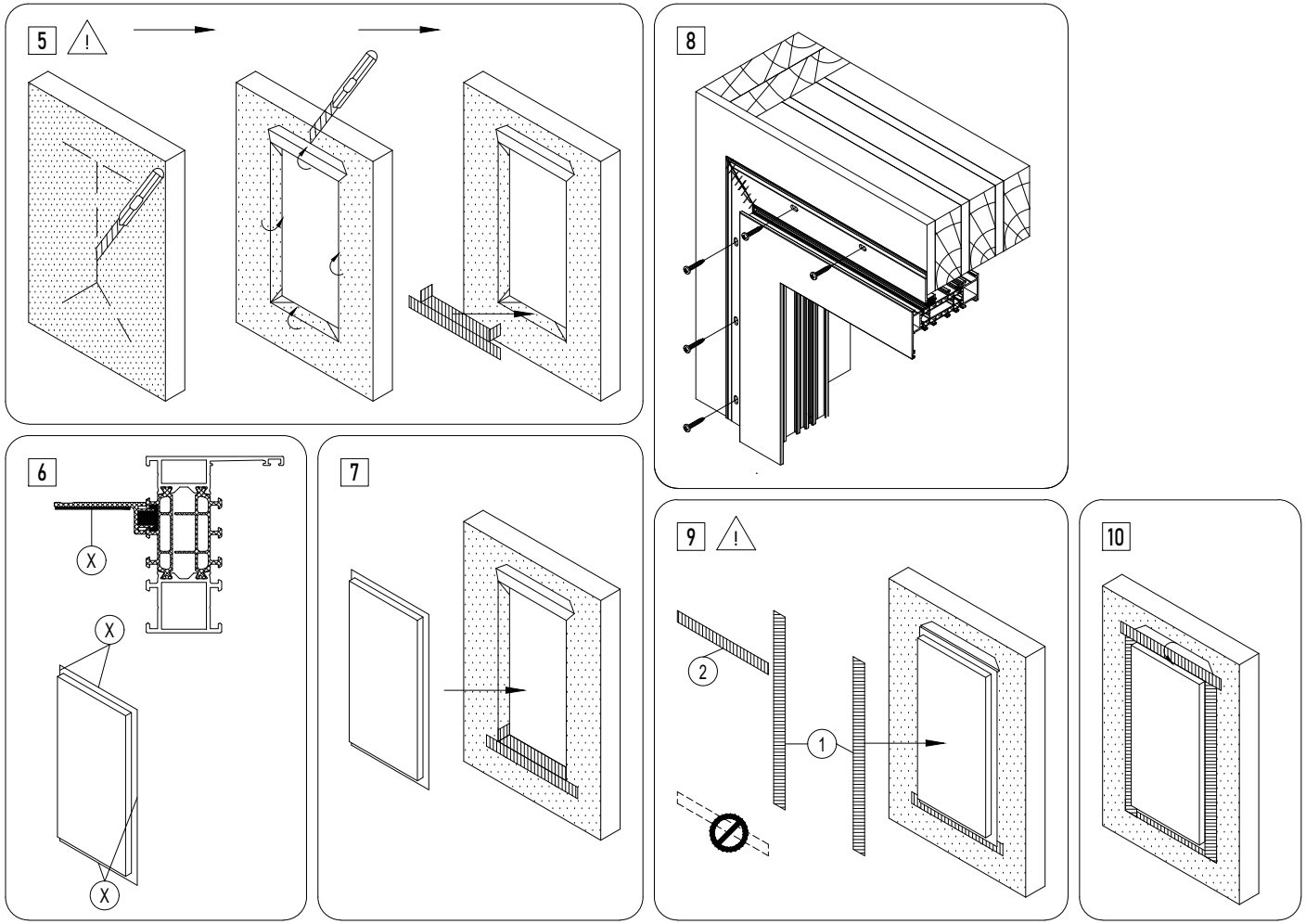

X	DICHTINGSMIDDEL MATIERE D'ETANCHEITE SEALING AGENT ABDICHTUNG
!	BOUWAANSLUITING --> VOLG LOKALE WETGEVING (AAMA 2400-21) RACCORDEMENT --> SUIVEZ LEGISLATURE LOCALE (AAMA 2400-21) BUILDING CONNECTION --> FOLLOW LOCAL LEGISLATION (AAMA 2400-21) BAUANSCHLUSS --> FOLGEN SIE DER LOKALEN GESETZGEBUNG (AAMA 2400-21)
MONTAGEVOLGORDE L 'ORDRE DE MONTAGE THE ORDER OF ASSEMBLY MONTAGEREIHENFOLGE	1 2 3 .

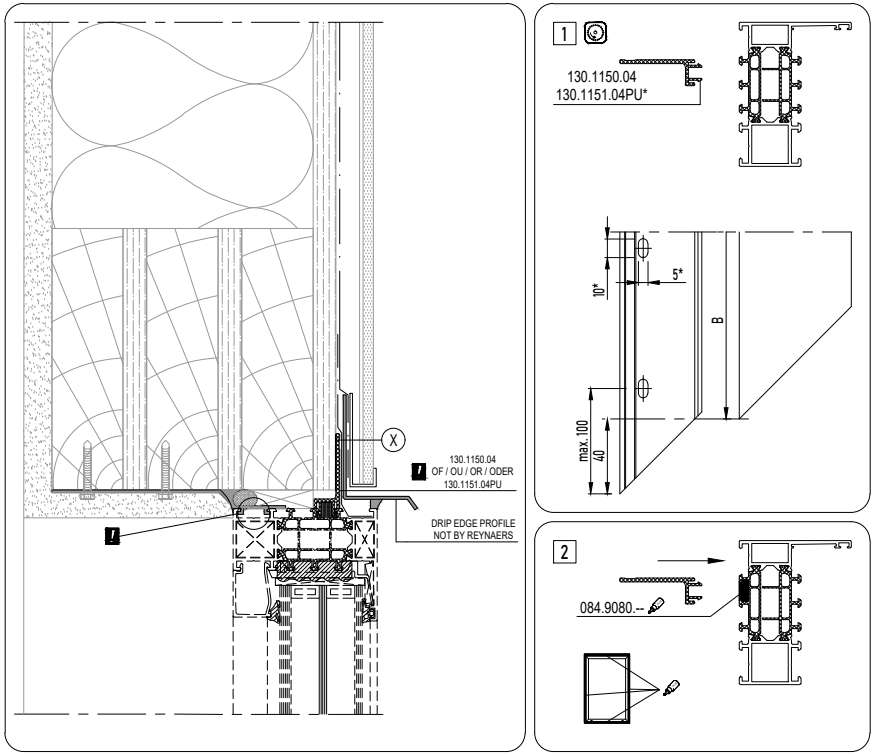
X
130.1150.04
OF / OU / OR / ODER
130.1151.04PU
DRIP EDGE PROFILE
NOT BY REYNAERS
1
130.1150.04
130.1151.04PU*
10*
5*
B
max. 100
40
2
084.9080.--

ASSEMBLY RECEPTOR PROFILE

CEILING AND FLOOR CONNECTION

MASTERLINE 8-Fu

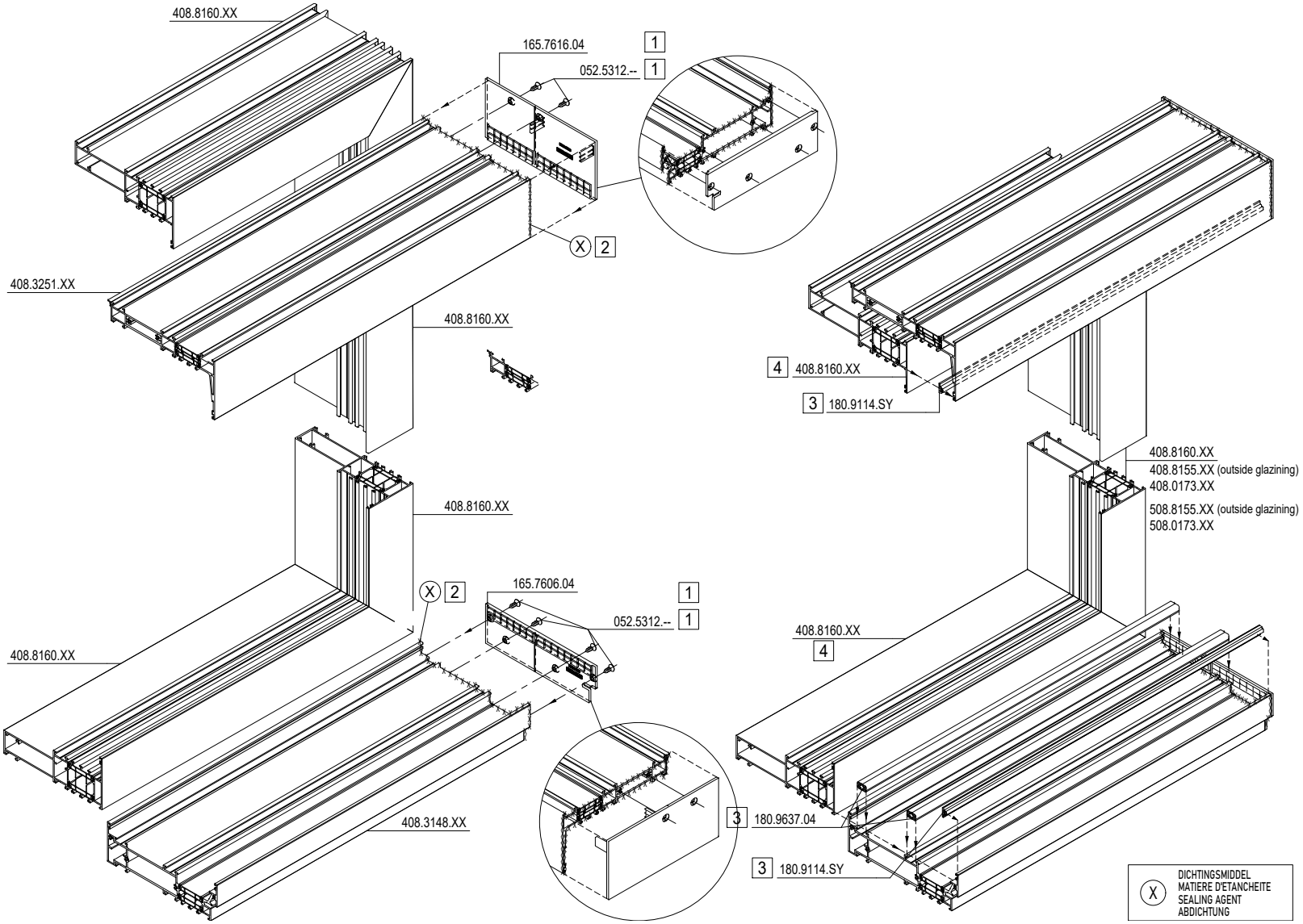

ASSEMBLY RECEPTOR PROFILE

CEILING AND FLOOR CONNECTION

MASTERLINE 8-Fu

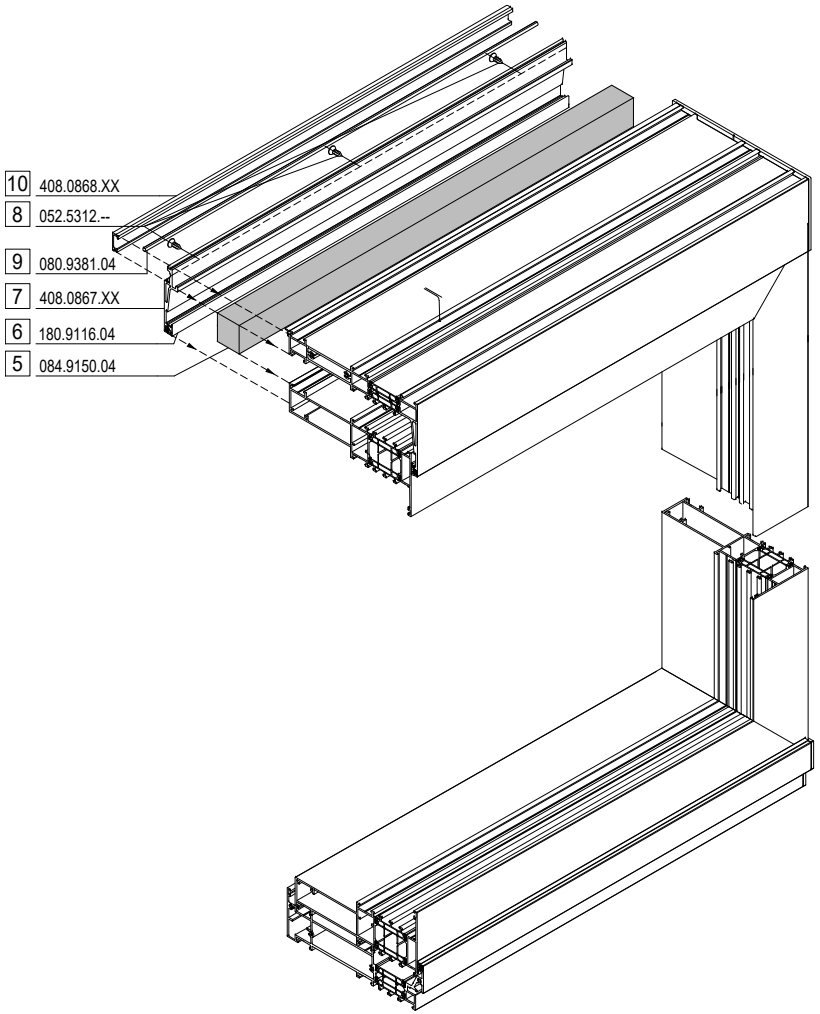

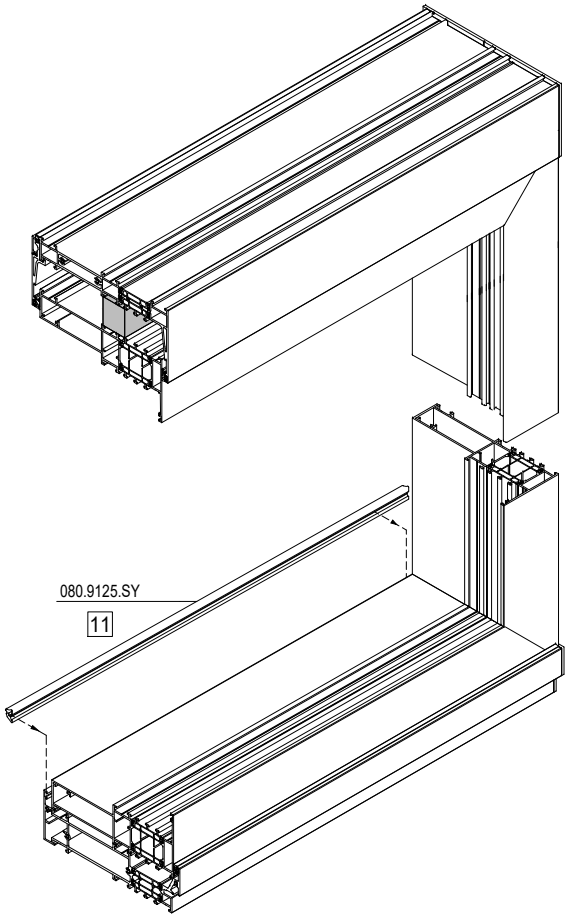

MONTAGEVOLGORDE
L 'ORDRE DE MONTAGE
THE ORDER OF ASSEMBLY
MONTAGEREIHENFOLGE

1 2 3 .

ASSEMBLY SUPPORTING PIECE

SUPPORTING BLOCK 169.8771.04

MASTERLINE 8-Fu

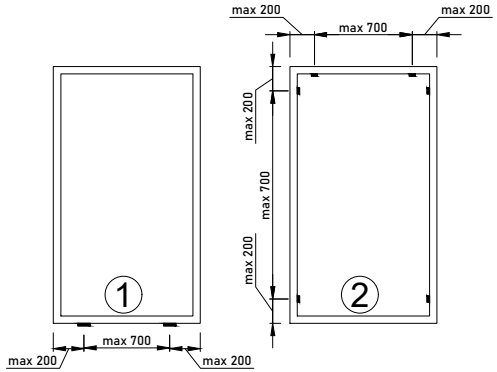

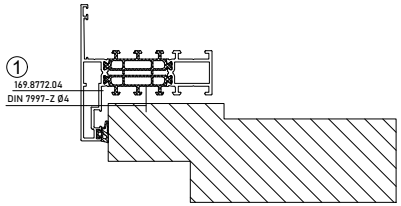

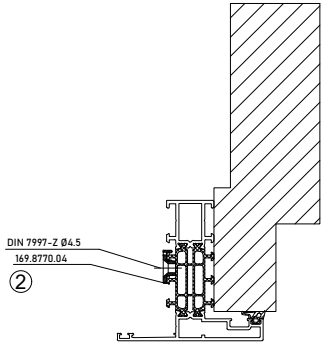

ASSEMBLY SUPPORTING PIECE

SUPPORTING BLOCK 169.8771.04

MASTERLINE 8-Fu

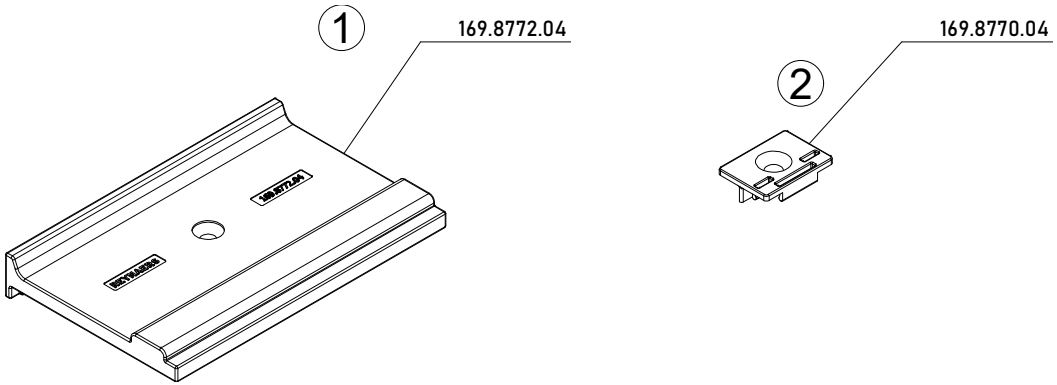

ASSEMBLY SUPPORTING PIECE

SUPPORTING BLOCK 169.8771.04

MASTERLINE 8-Fu

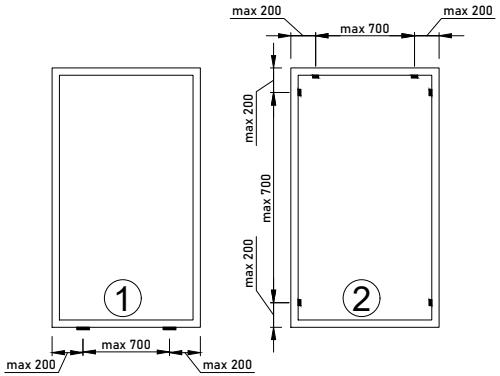

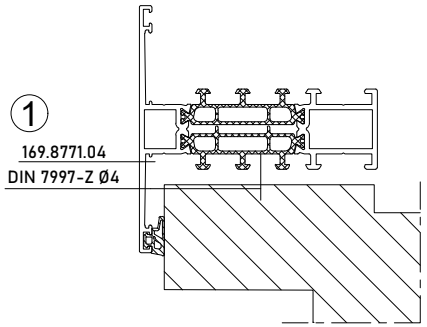

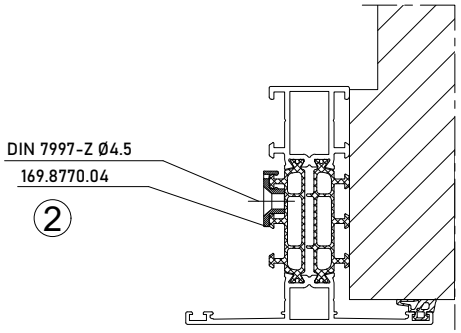

ASSEMBLY SUPPORTING PIECE

SUPPORTING BLOCK 169.8771.04

MASTERLINE 8-Fu

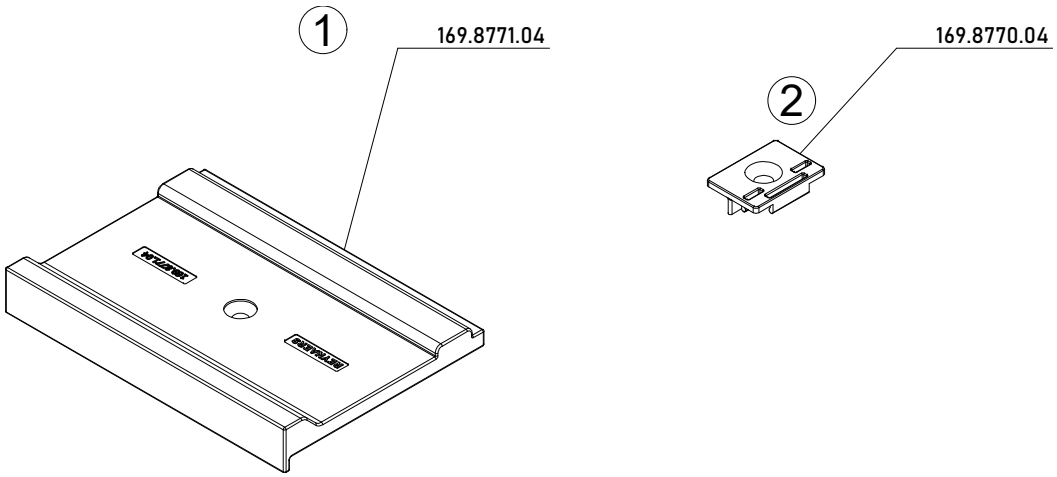

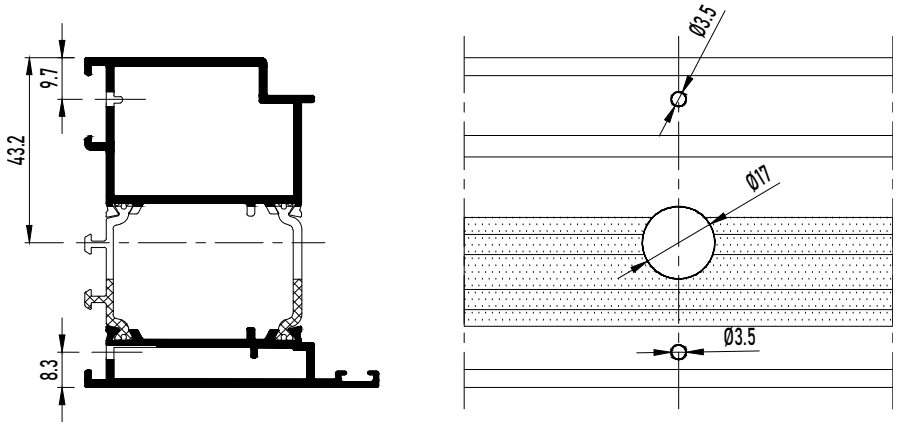
9.7
43.2
8.3
Ø3.5
Ø17
Ø3.5

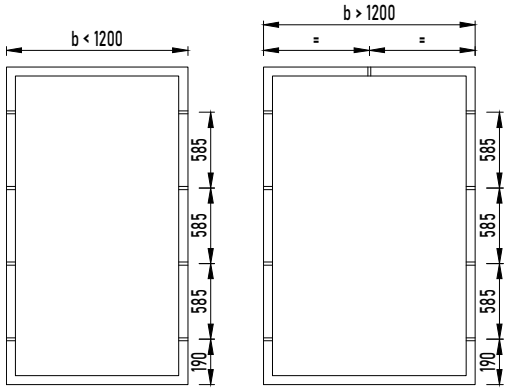

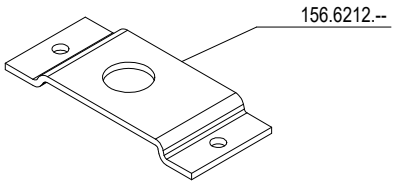

BIJKOMENDE INFO VOORBEREIDING/VERWERKING -> RAADPLEEG WWW.ADJUFIX.COM/GUIDES
INFO COMPLEMENTAIRE PREPARATION/USINAGE -> CONSULTEZ WWW.ADJUFIX.COM/GUIDES
ADDITIONAL INFO PREPARATION/PROCESSING -> CONSULT WWW.ADJUFIX.COM/GUIDES
ZUSAETZLICHE INFO VORBEREITUNG/VERARBEITUNG -> SIEHE WWW.ADJUFIX.COM/GUIDES

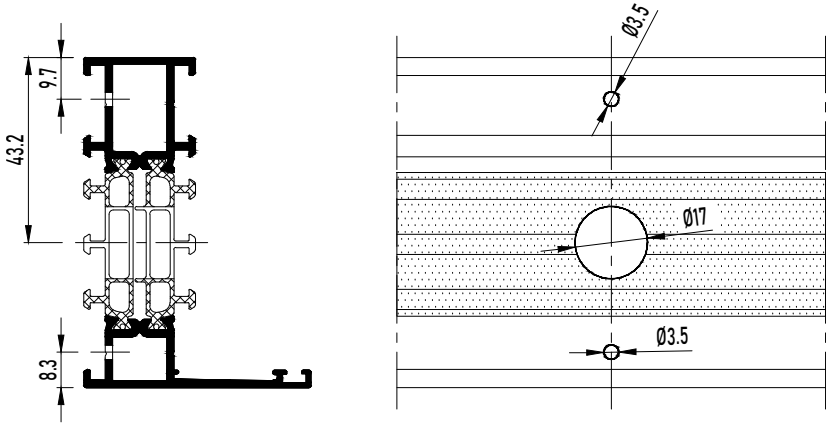
9.7
43.2
8.3
Ø3.5
Ø17
Ø3.5

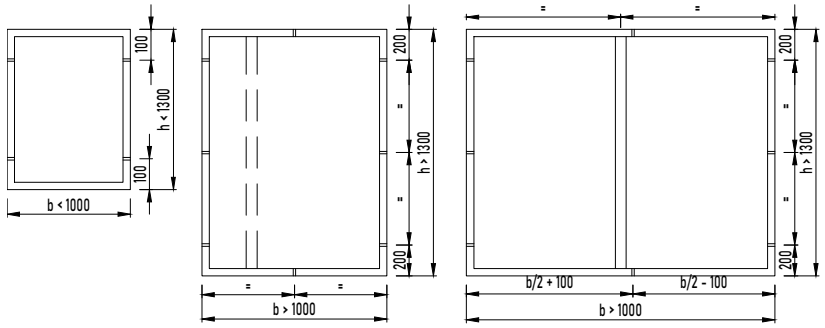
100
h < 1300
100
b < 1000
200
h > 1300
200
b > 1000
200
h > 1300
200
b/2 + 100
b/2 - 100
b > 1000

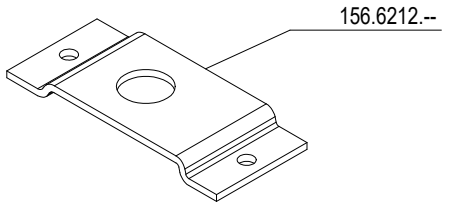
156.6212.--

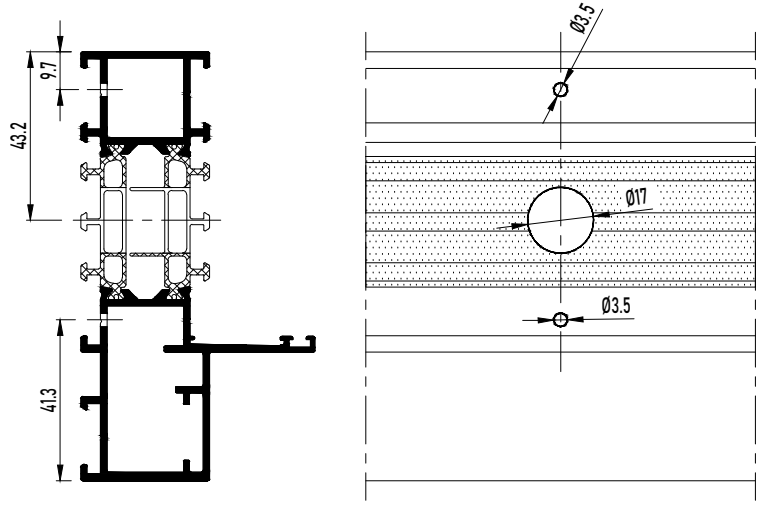
9.7
43.2
41.3
Ø3.5
Ø17
Ø3.5

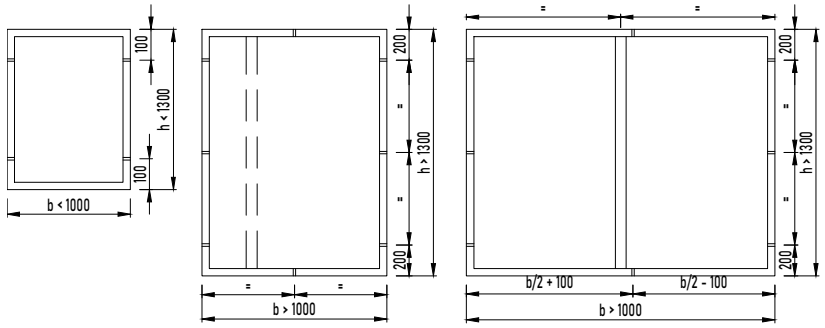
100
h < 1300
100
b < 1000
200
h > 1300
200
b > 1000
200
h > 1300
200
b/2 + 100
b/2 - 100
b > 1000

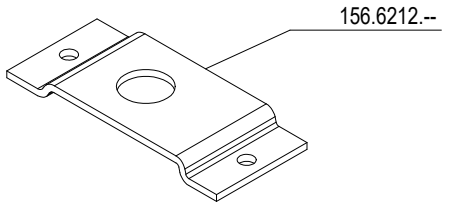
156.6212.--

OVERVIEW CORNER CLEATS WINDOW-DOOR

POSITIONING OF CORNER CLEATS

MASTERLINE 8-Fu

TYPE 1

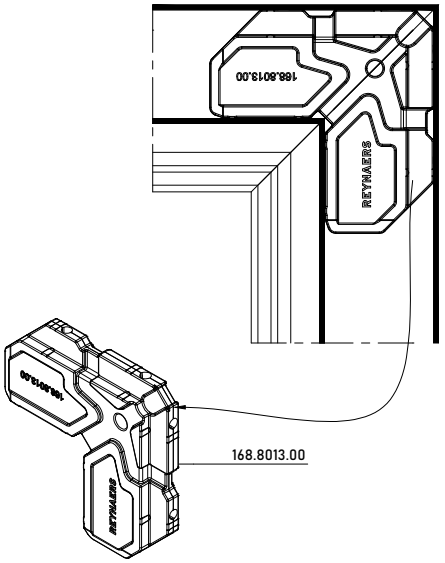

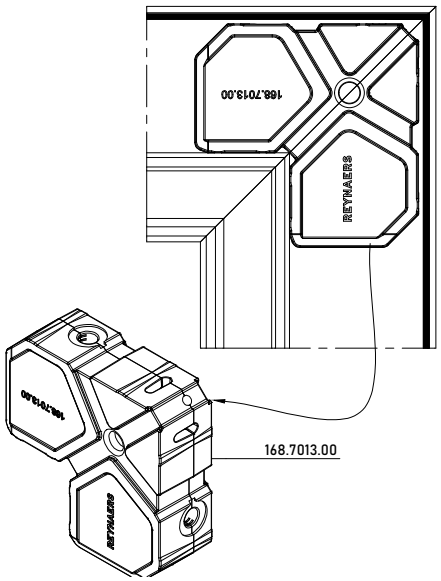

TYPE 2

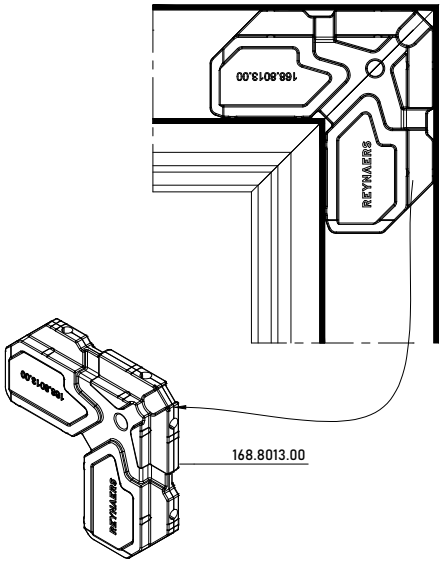

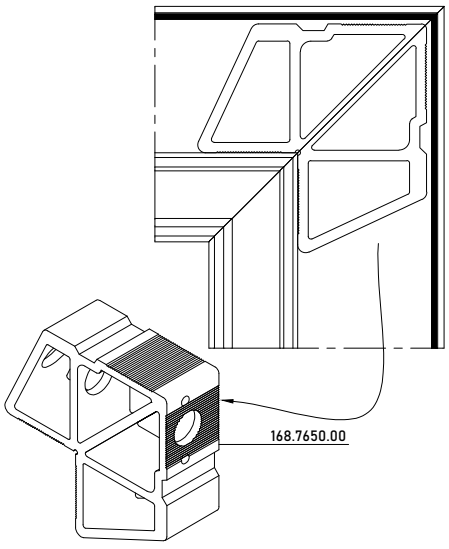

OVERVIEW CORNER CLEATS WINDOW-DOOR

POSITIONING OF CORNER CLEATS

MASTERLINE 8-Fu

HOEKVERBINDERS
EQUERRES
CORNER CLEATS
ECKVERBINDERS

168.7013.00 (7013)
168.7650.00 (7650)
168.8013.00 (8013)

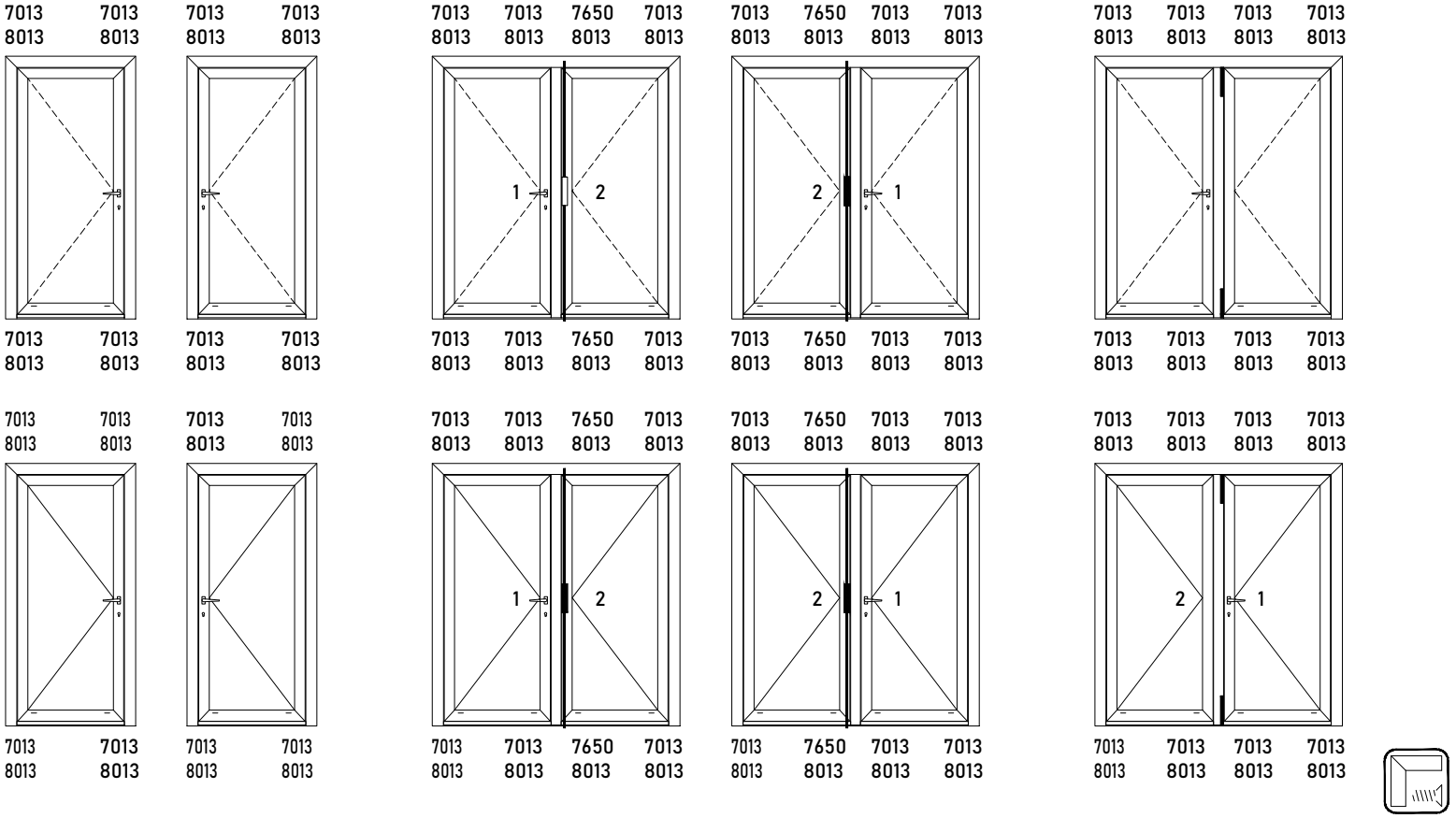

OVERVIEW CORNER CLEATS WINDOW-DOOR

POSITIONING OF CORNER CLEATS

MASTERLINE 10-Fu, MASTERLINE 8-Fu

TYPE 1

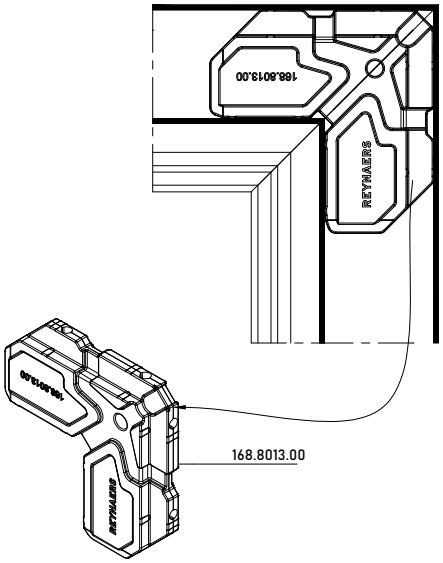

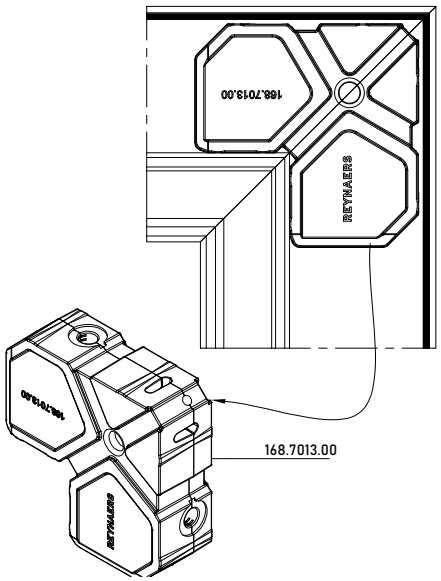

TYPE 2

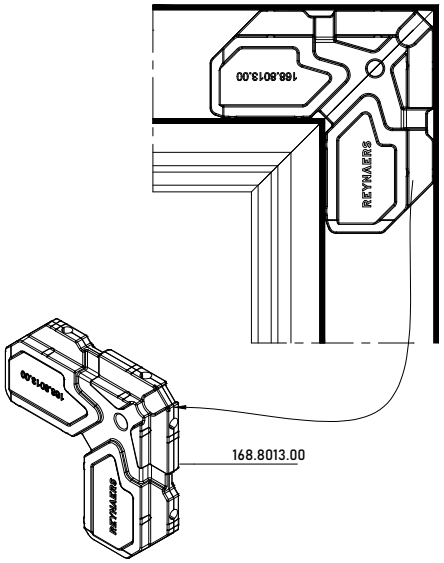

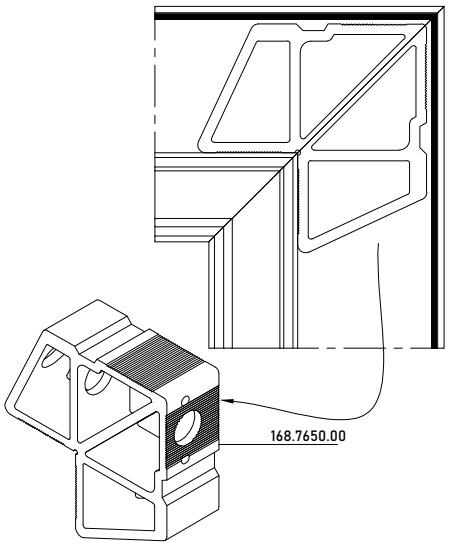

OVERVIEW CORNER CLEATS WINDOW-DOOR

POSITIONING OF CORNER CLEATS

MASTERLINE 10-Fu, MASTERLINE 8-Fu

HOEKVERBINDERS
EQUERRES
CORNER CLEATS
ECKVERBINDERS

168.7013.00 (7013)
168.7650.00 (7650)
168.8013.00 (8013)

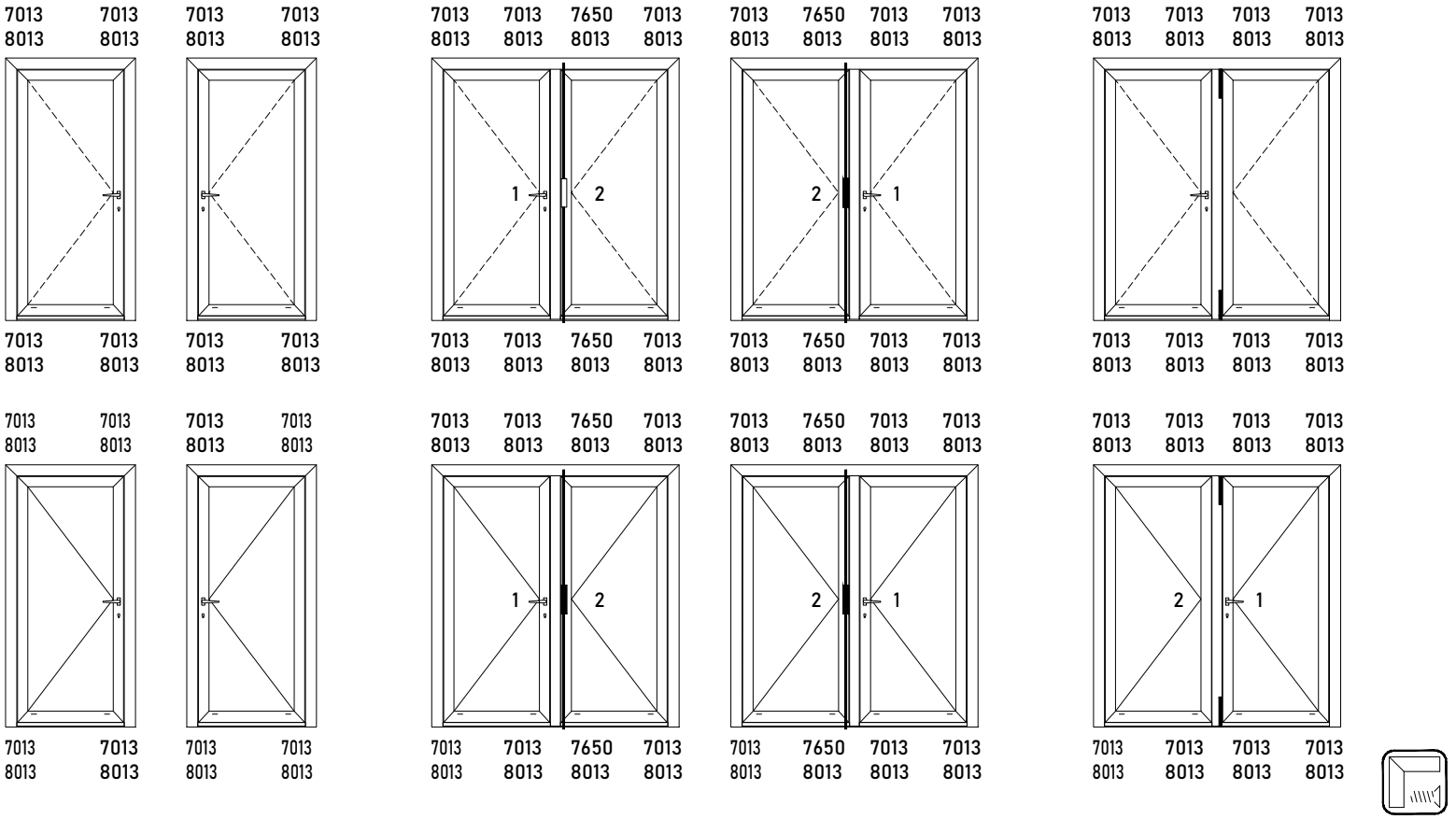

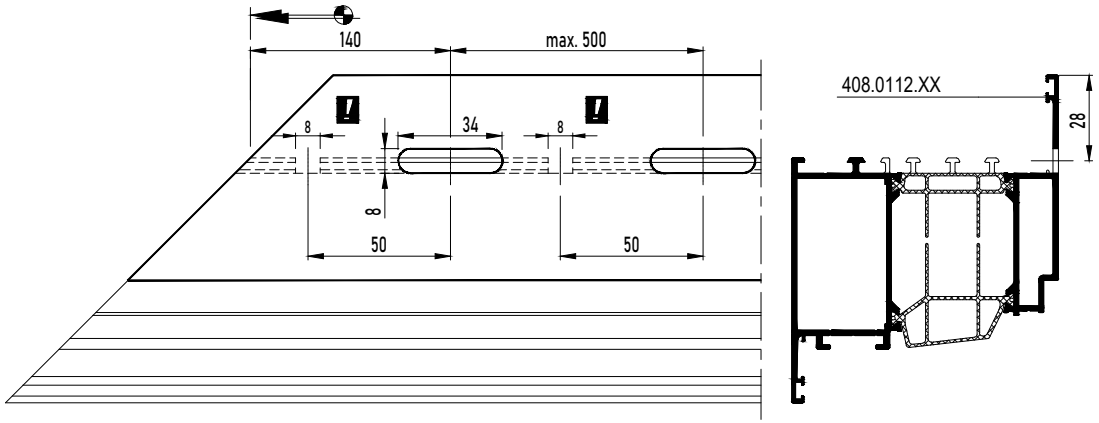
140
max. 500
8
34
8
8
50
50
408.0112.XX
28

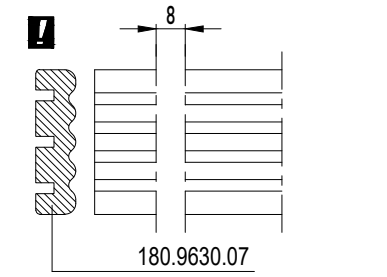
8
180.9630.07

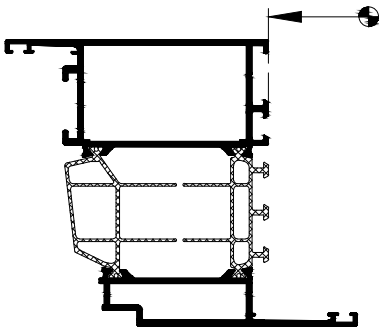

DRAINAGE MC WINDOW-DOOR

DRAINAGE VENT Re - De

MASTERLINE 8-Fu

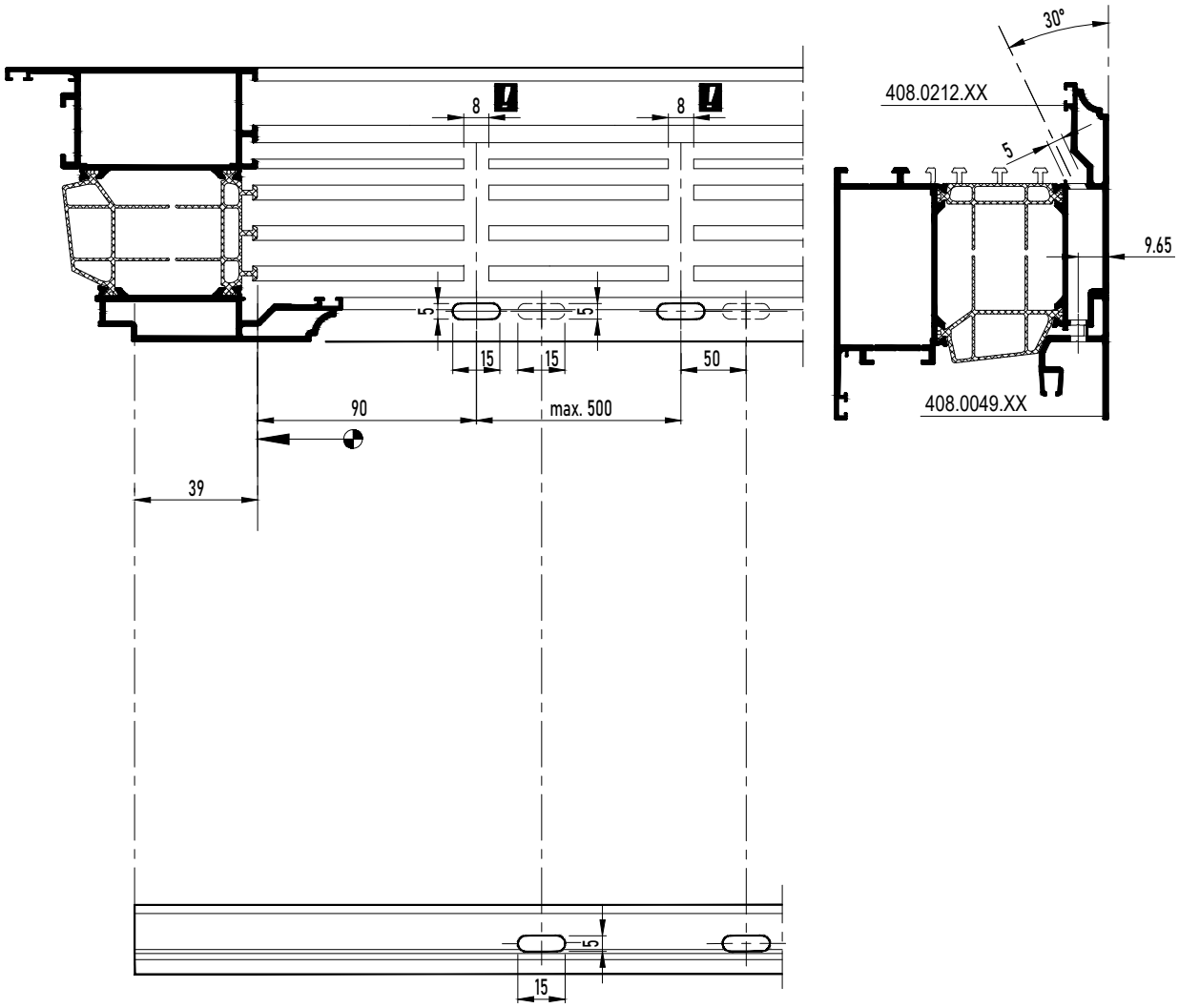

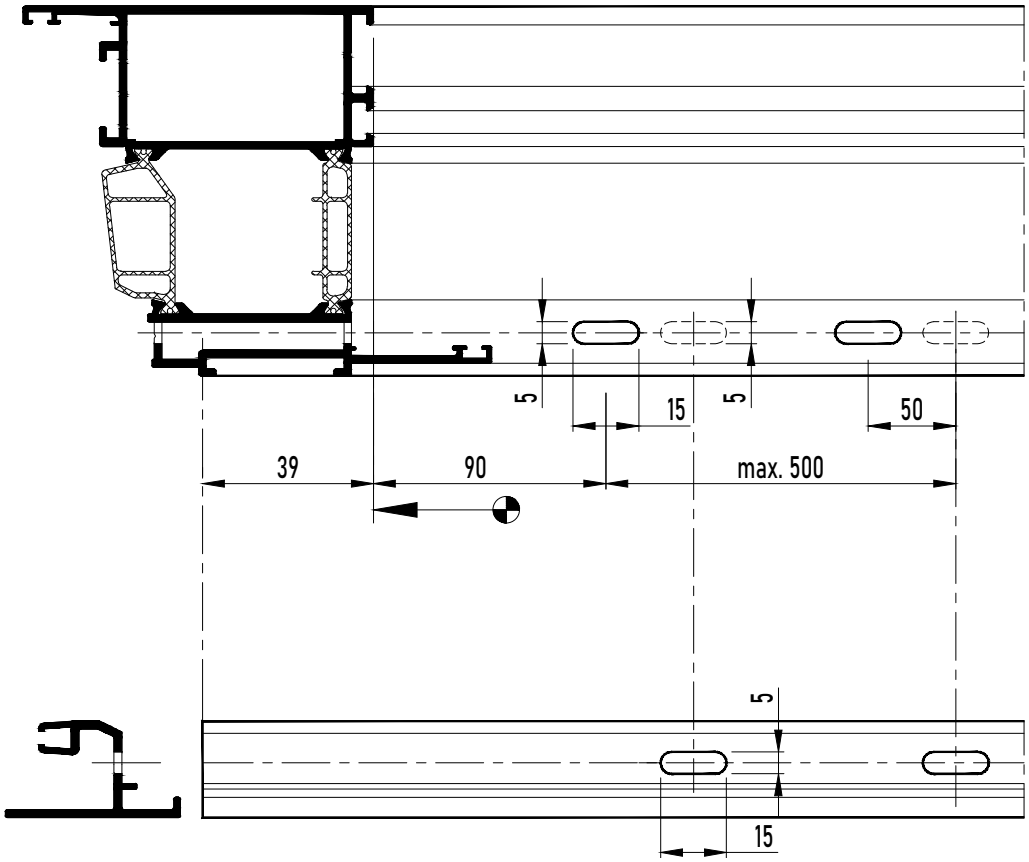
5
15
5
50
39
90
max. 500
5
15

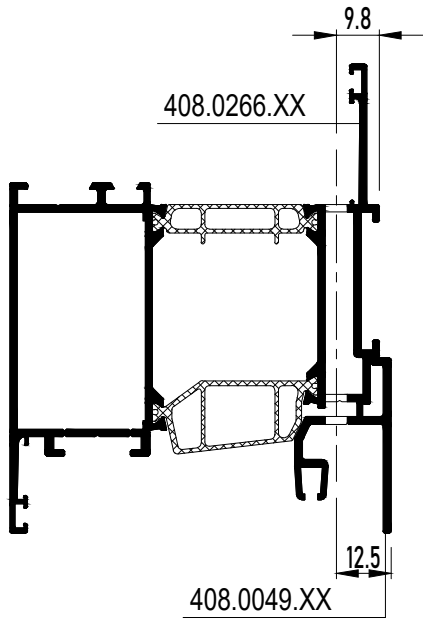
9.8
408.0266.XX
12.5
408.0049.XX

DRAINAGE MC WINDOW-DOOR

DRAINAGE VENT Re - De

MASTERLINE 8-Fu

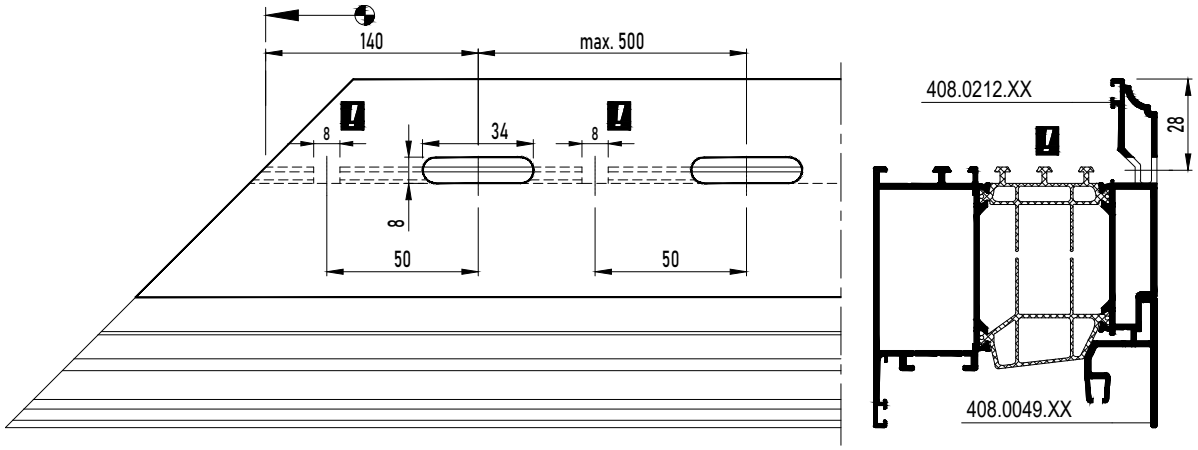

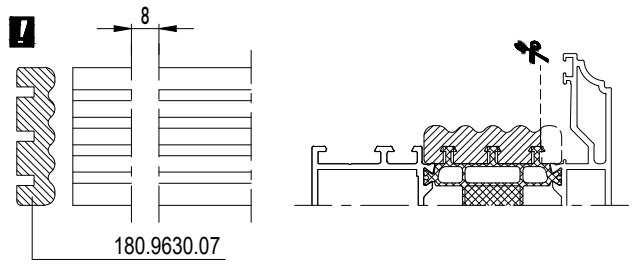
8
180.9630.07

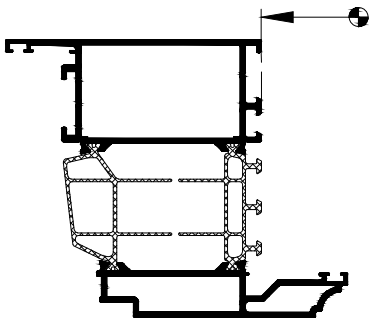

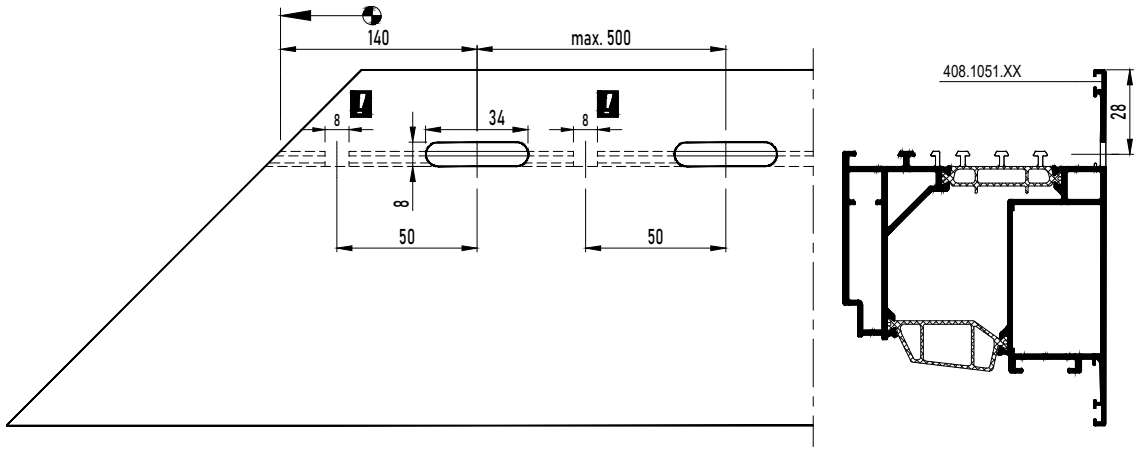
140
max. 500
34
8
8
8
50
50
408.1051.XX
28

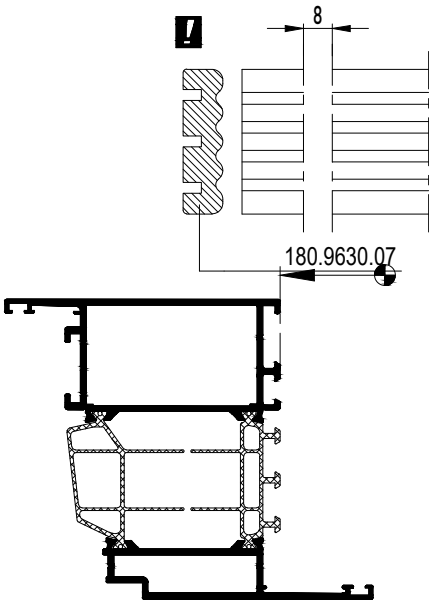
8
180.9630.07

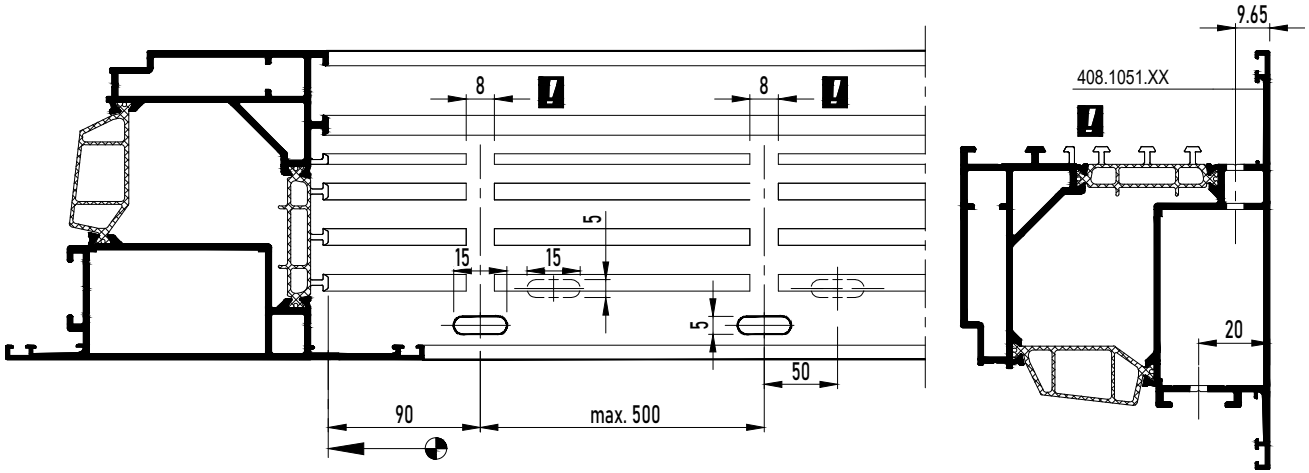
8
8
15
15
5
5
50
90
max. 500
9.65
408.1051.XX
20

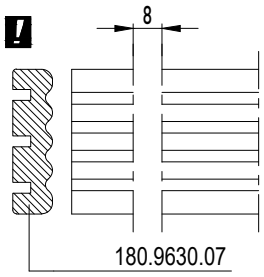
8
180.9630.07

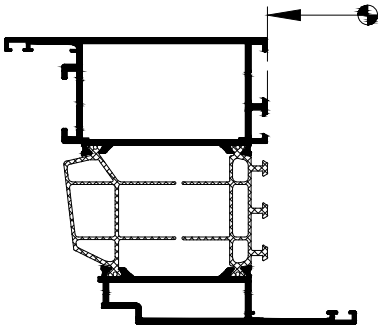

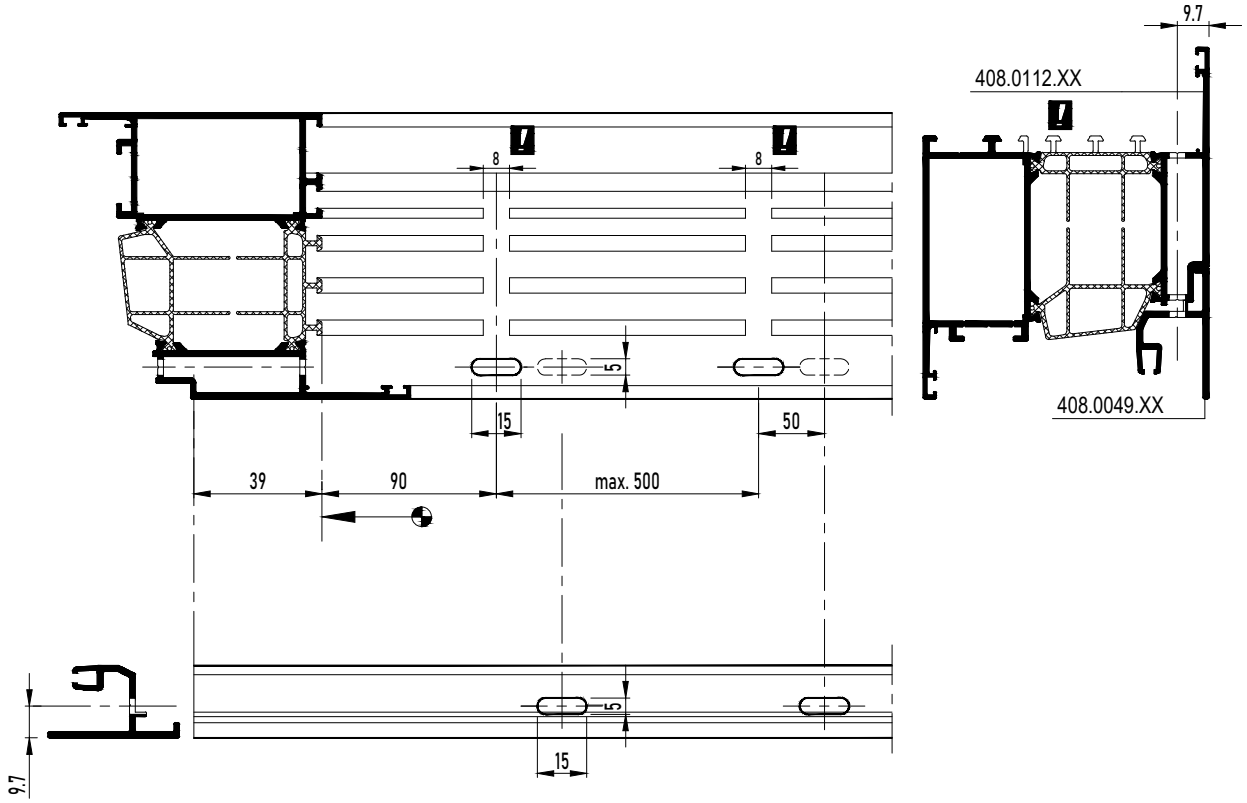
9.7
408.0112.XX
8
8
5
15
50
39
90
max. 500
408.0049.XX
5
15
9.7

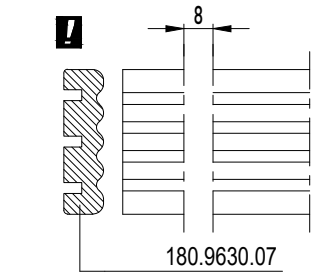
8
180.9630.07

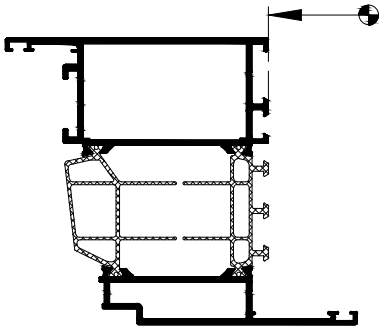

DRAINAGE MFPT WINDOW-DOOR

DRAINAGE VENT | 097.0183.00

MASTERLINE 8-Fu

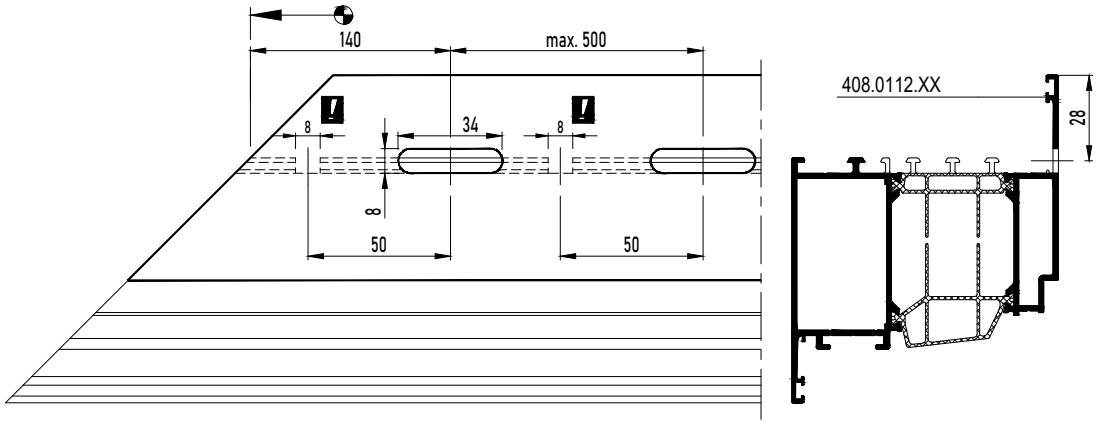

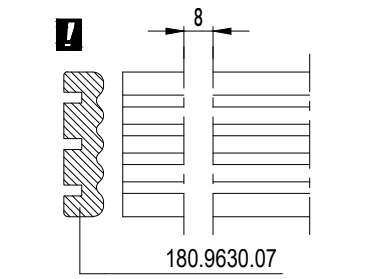
8
180.9630.07

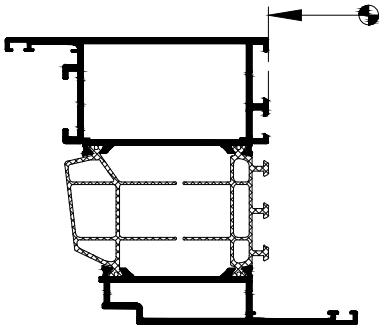

DRAINAGE MFPT WINDOW-DOOR

DRAINAGE VENT | 097.0183.00

MASTERLINE 8-Fu

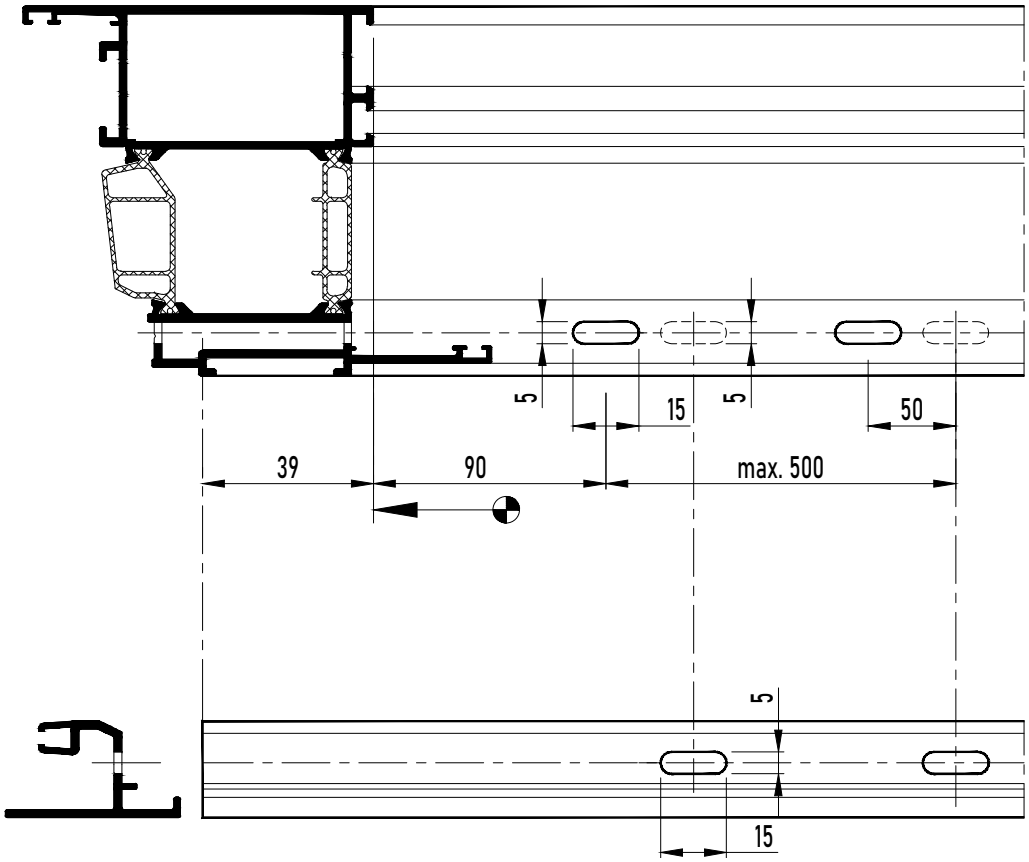

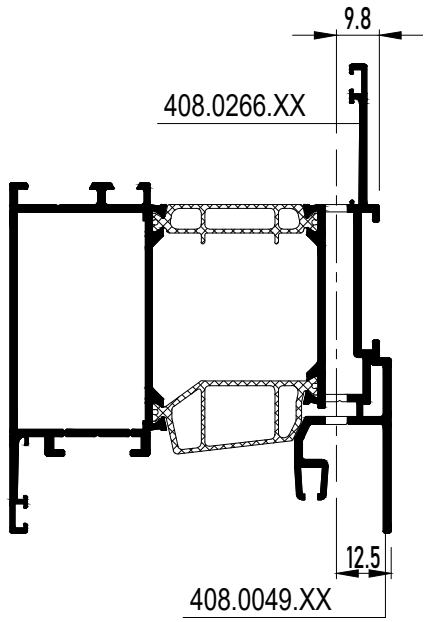

DRAINAGE MFPT WINDOW-DOOR

DRAINAGE VENT | 097.0183.00

MASTERLINE 8-Fu

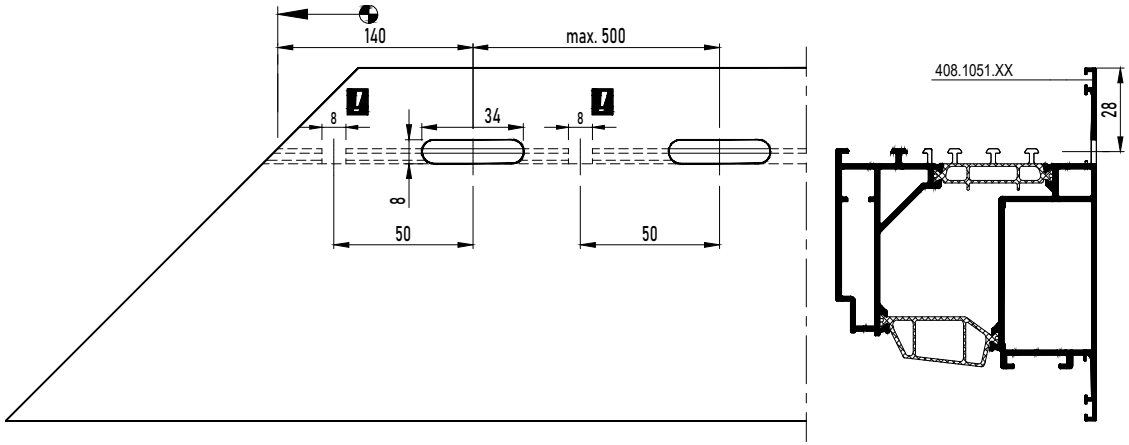

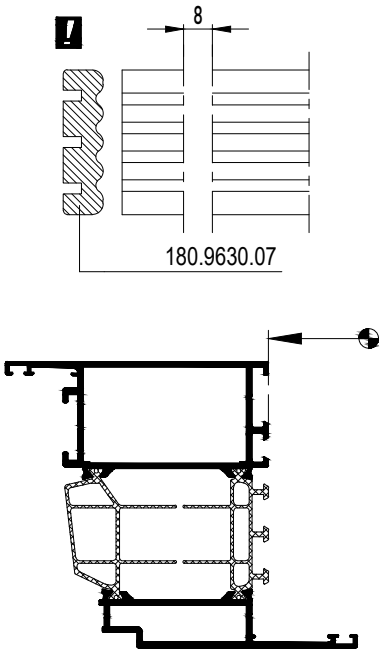
8
180.9630.07

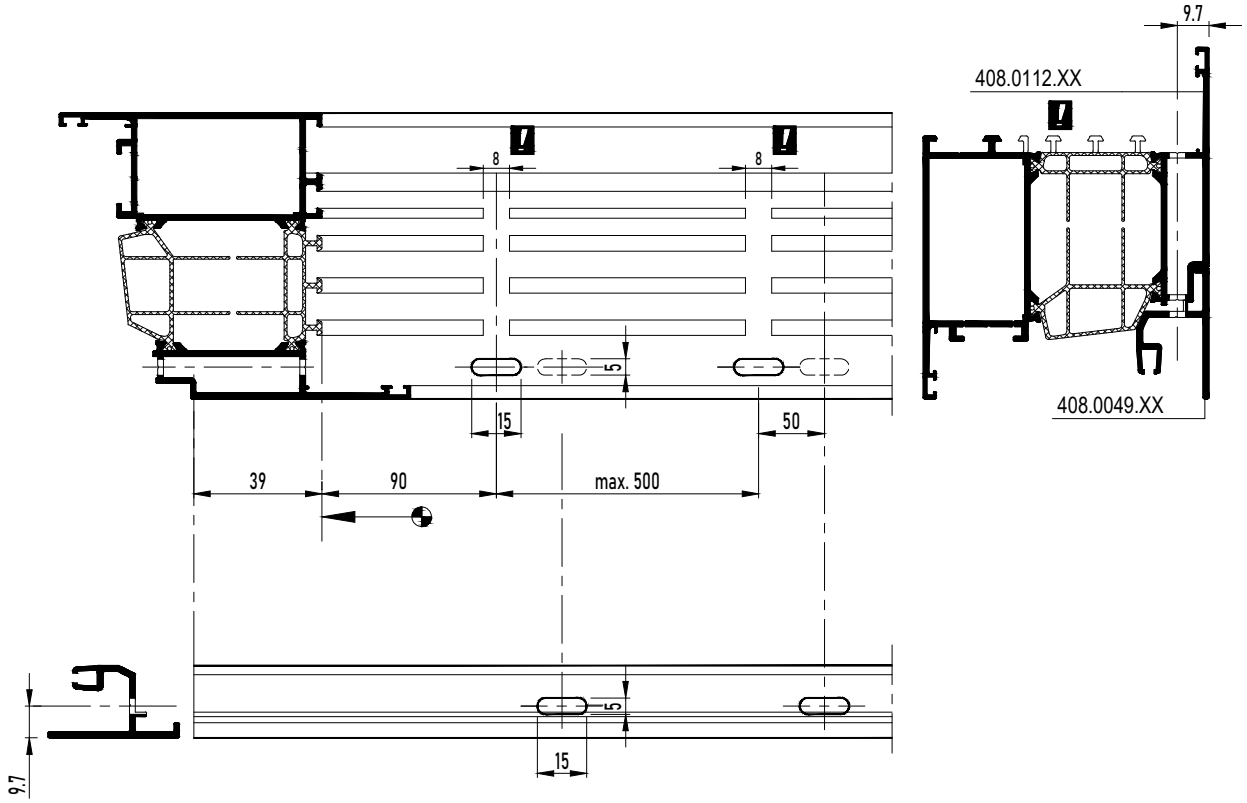
9.7
408.0112.XX
8
8
5
15
50
39
90
max. 500
408.0049.XX
5
15
9.7

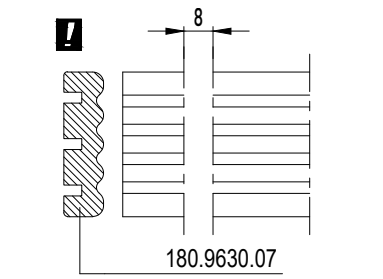
8
180.9630.07

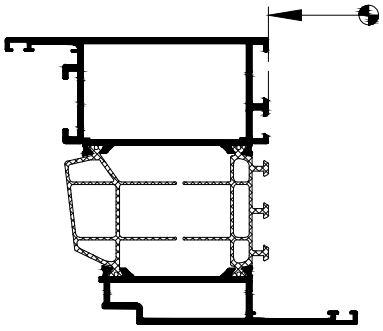

DRAINAGE CR WINDOW-DOOR

DRAINAGE VENT

MASTERLINE 8-Fu

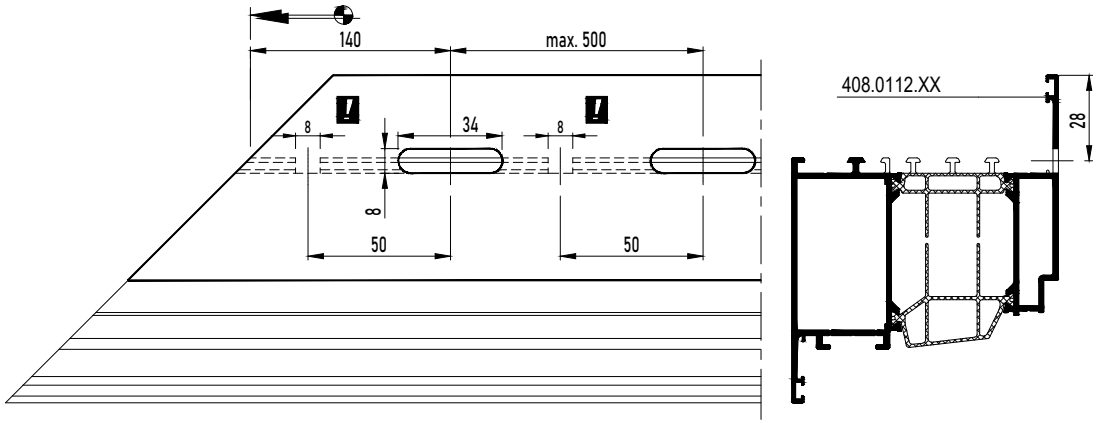

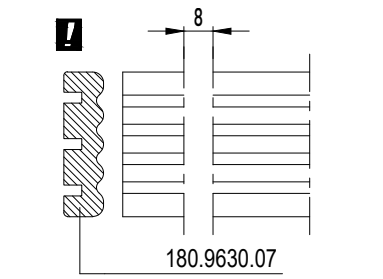
8
180.9630.07

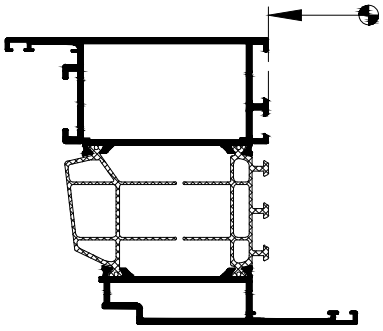

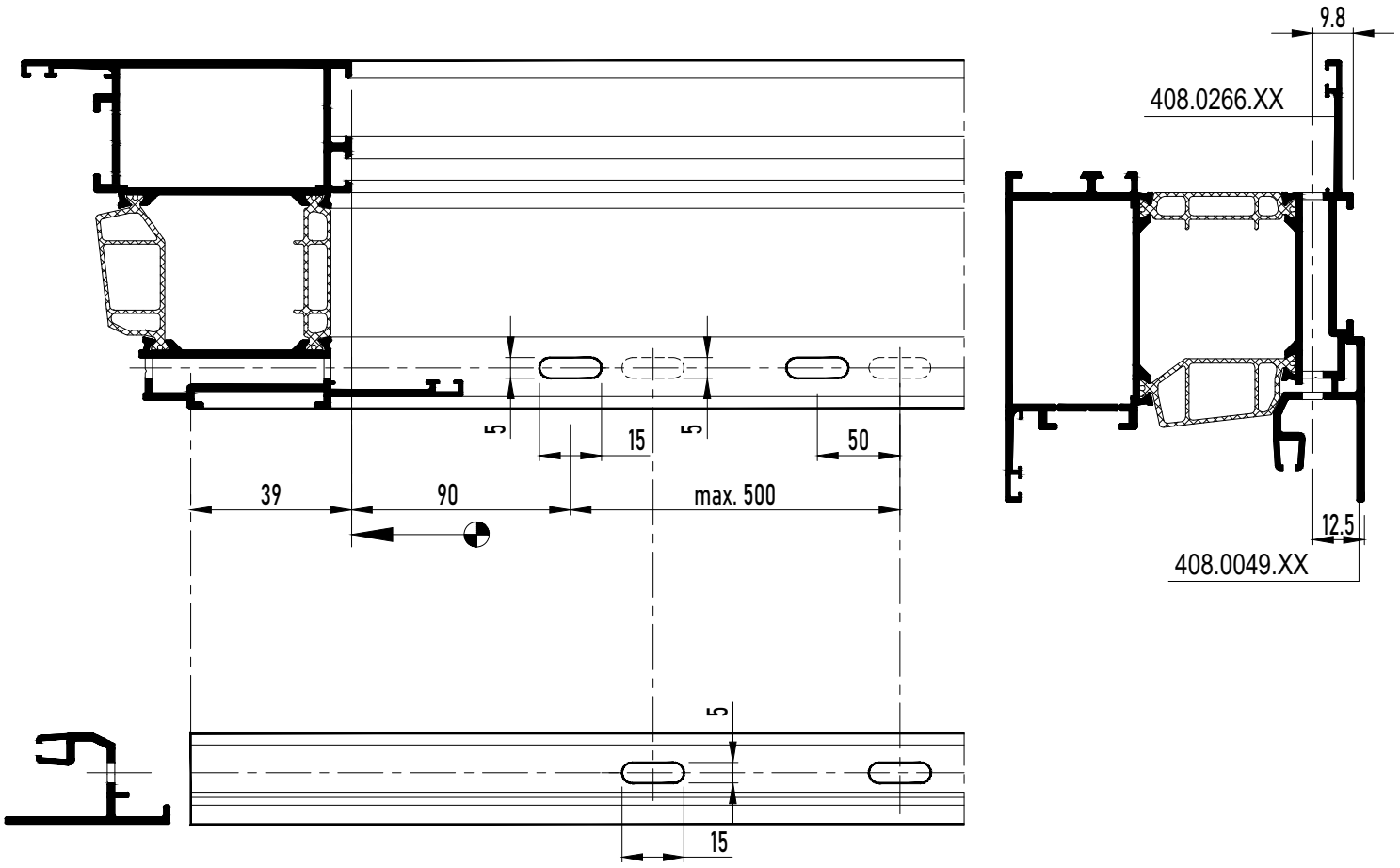
5
15
5
50
39
90
max. 500
5
15

9.8
408.0266.XX
12.5
408.0049.XX

DRAINAGE CR WINDOW-DOOR

DRAINAGE VENT

MASTERLINE 8-Fu

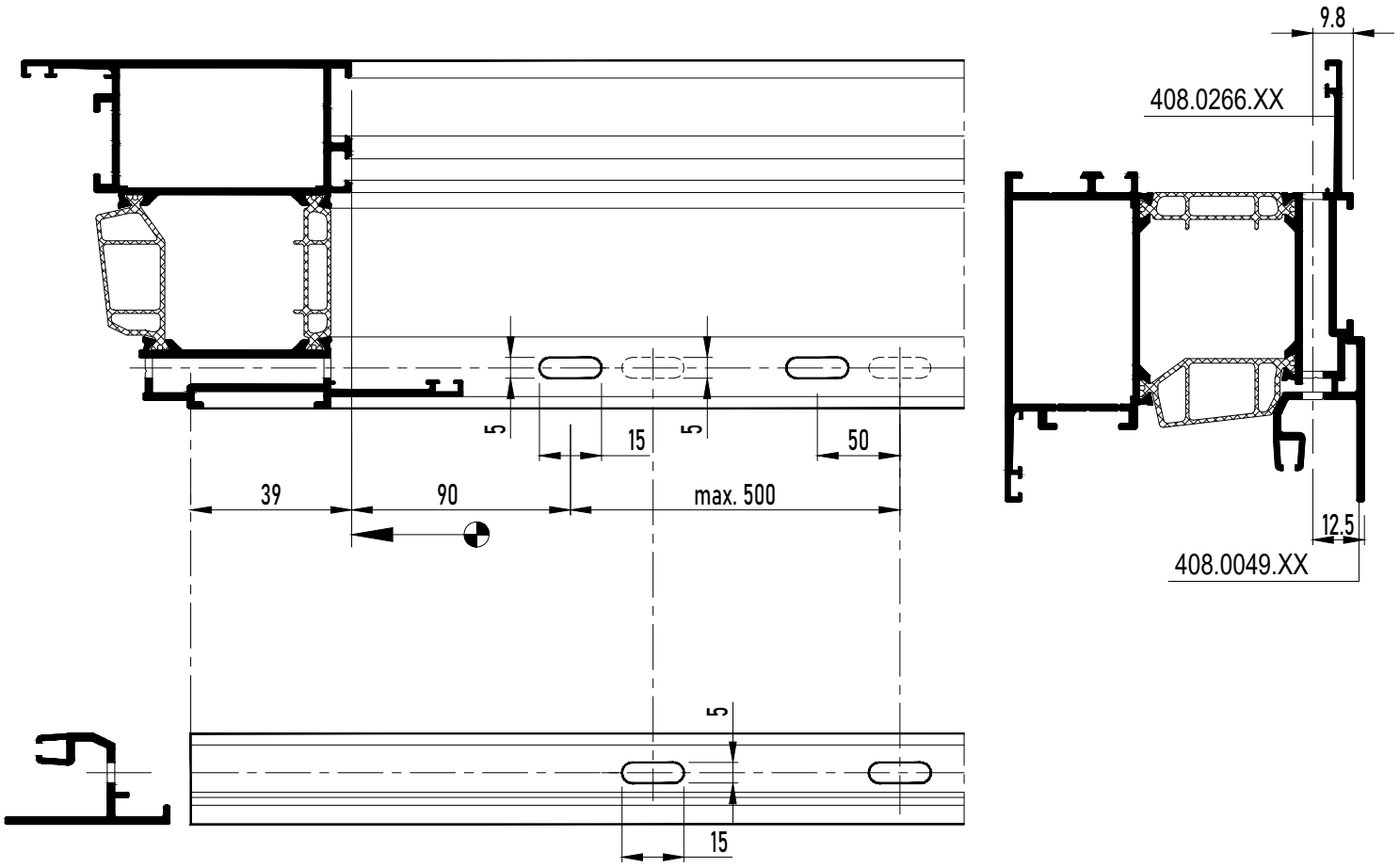

DRAINAGE CR WINDOW-DOOR

DRAINAGE VENT

MASTERLINE 8-Fu

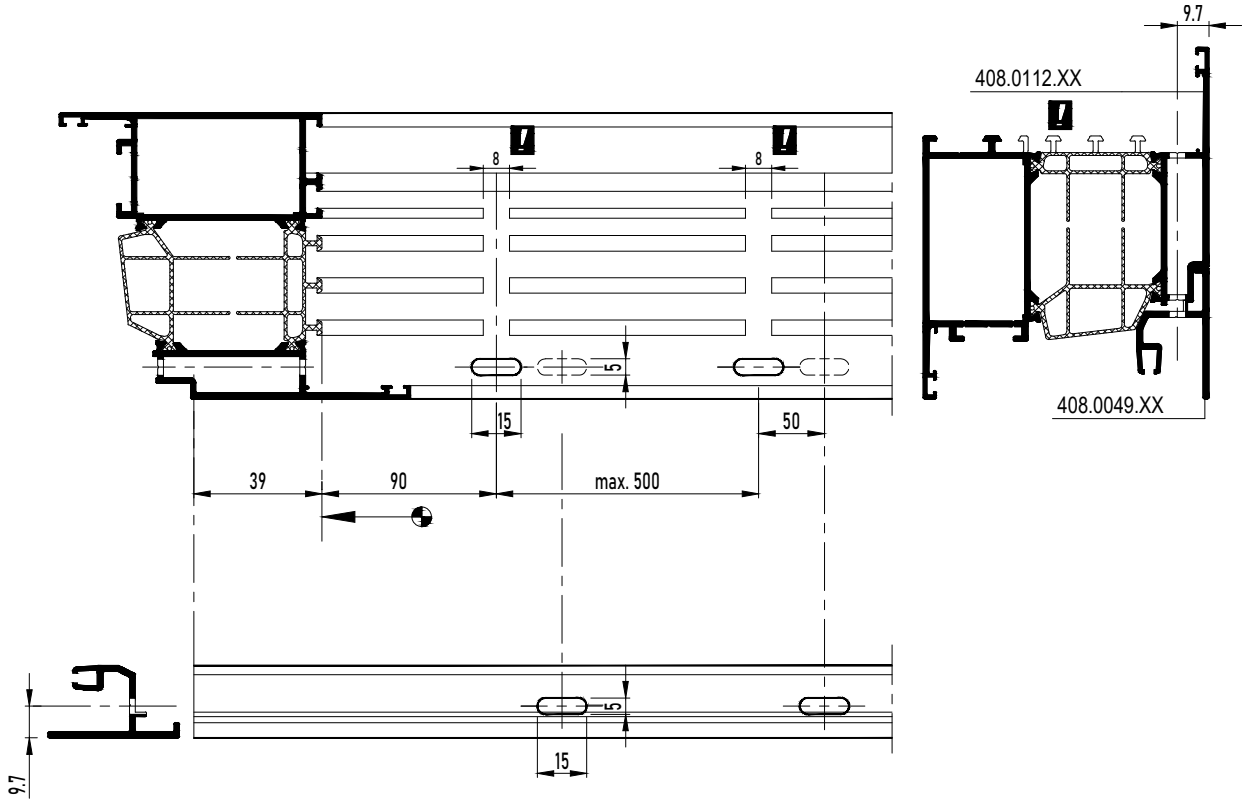

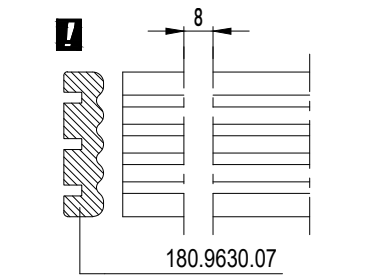
8
180.9630.07

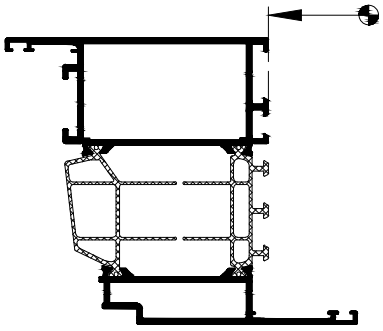

DRAINAGE CR WINDOW-DOOR

DRAINAGE VENT

MASTERLINE 8-Fu

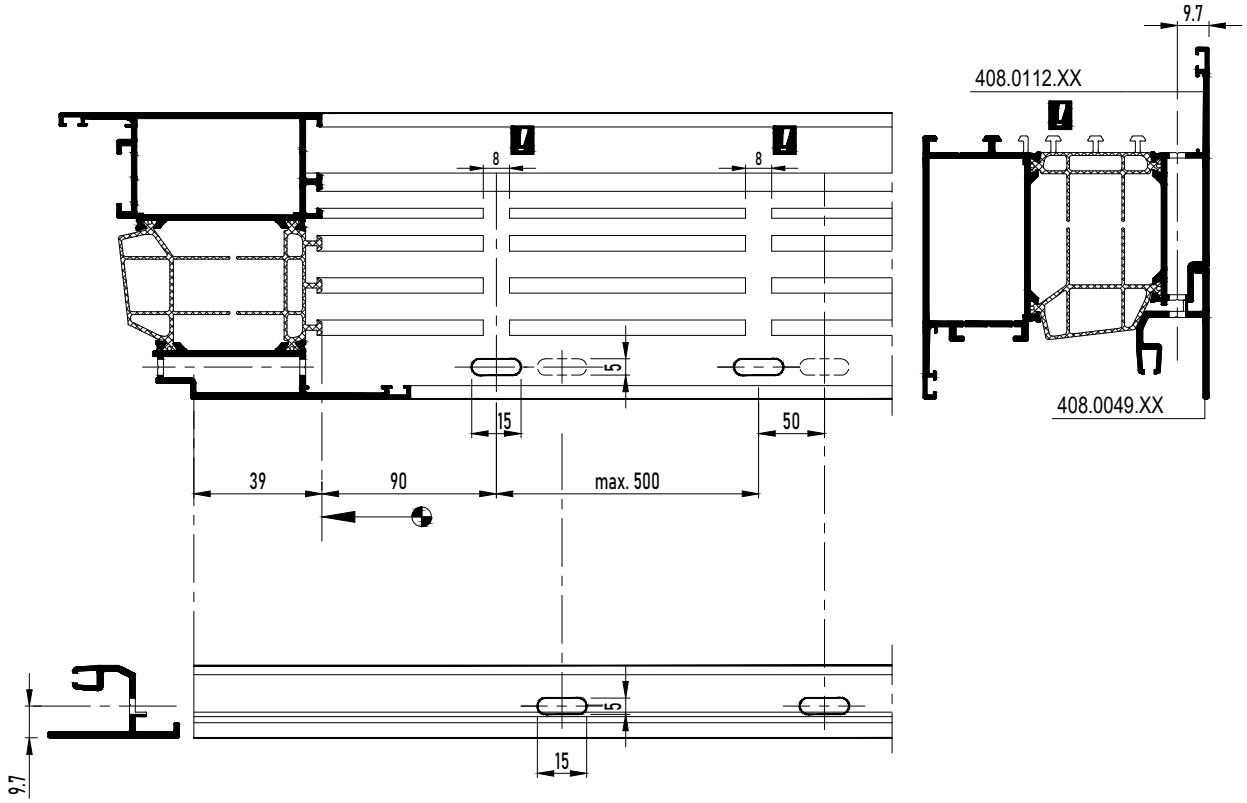

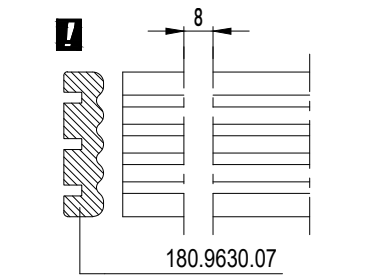
8
180.9630.07

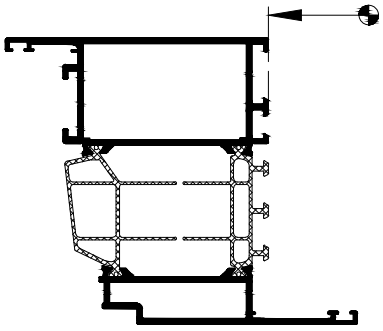

DRAINAGE CR WINDOW-DOOR

DRAINAGE VENT

MASTERLINE 8-Fu

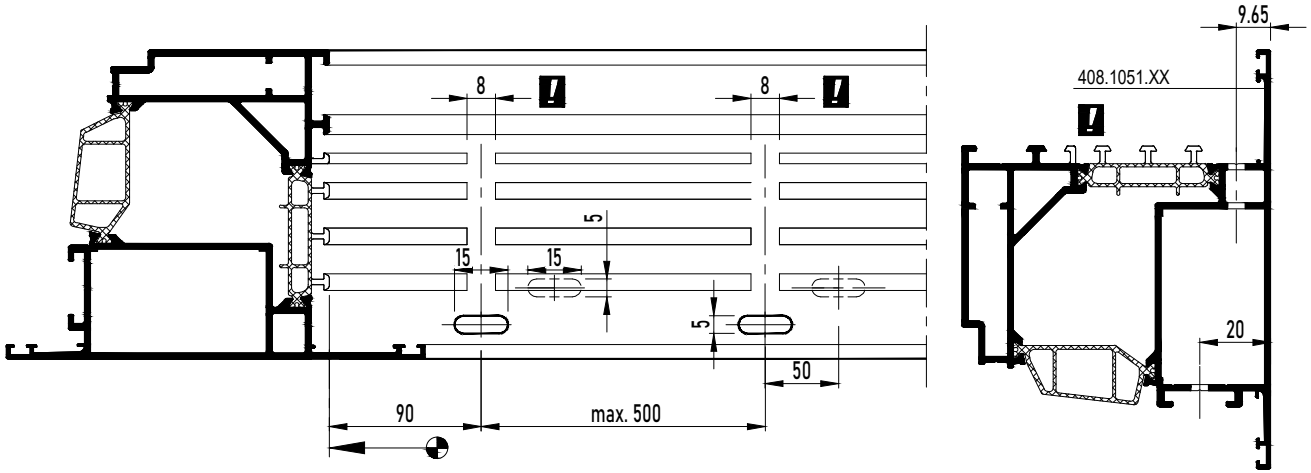

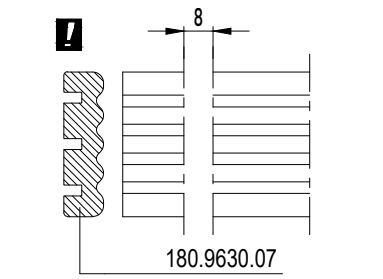
8
180.9630.07

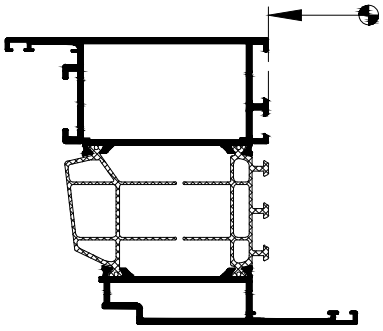

DRAINAGE CR WINDOW-DOOR

DRAINAGE VENT

MASTERLINE 8-Fu

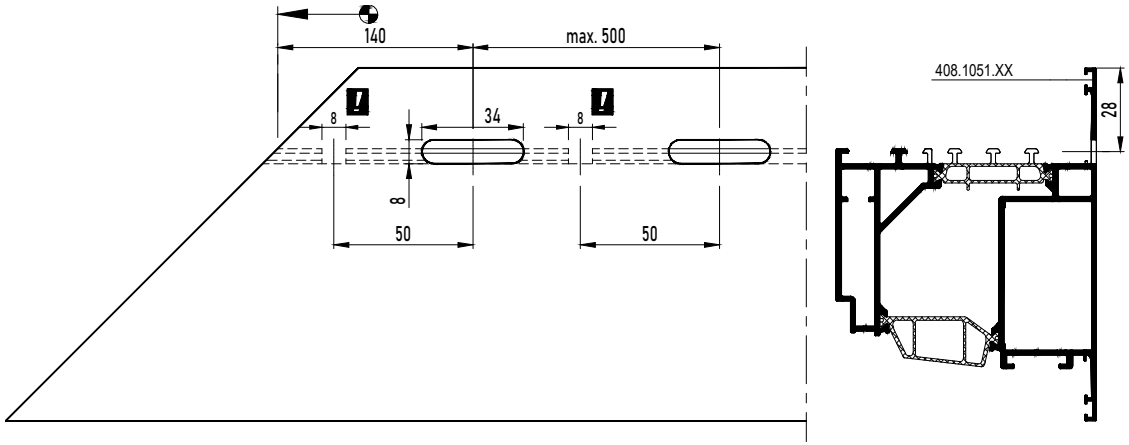

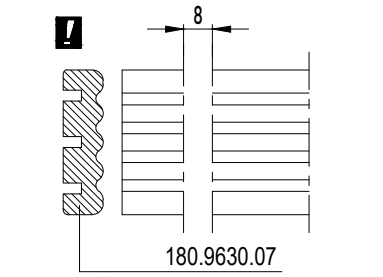
8
180.9630.07

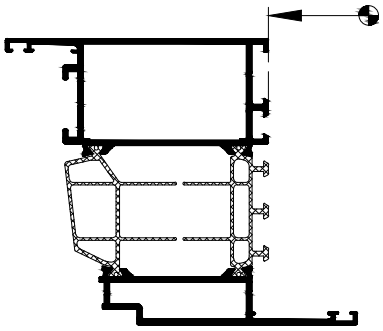

PLAATSING EINDSTUKKEN
FINITION PIECES FINALES
SEALING END PIECES
MONTAGE ENDKAPPEN

169.7300.SY (7300) of/ou/or/oder 169.7400.SY (7400)

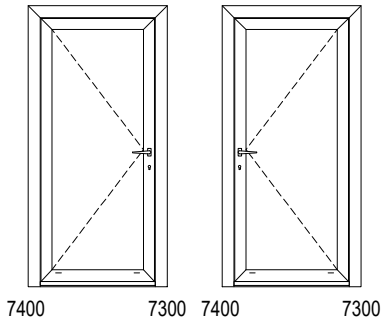

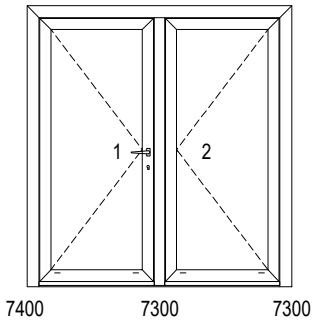

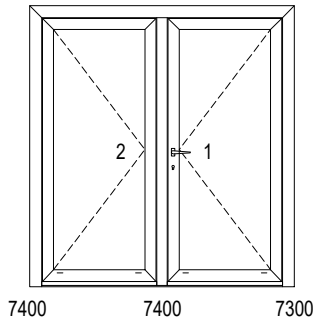

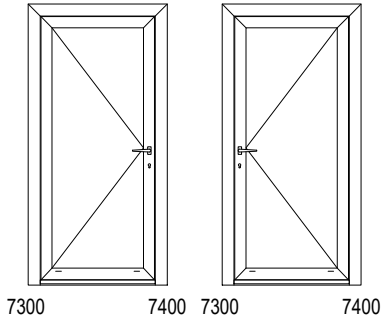

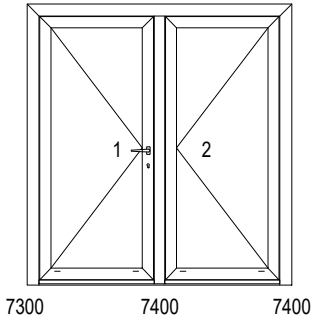

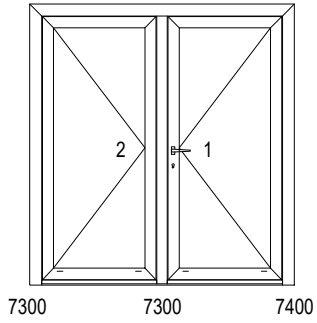

WINDOW-DOOR BRUSH

WINDOW-DOOR WITH BRUSH

MASTERLINE 10-Fu, MASTERLINE 8-Fu

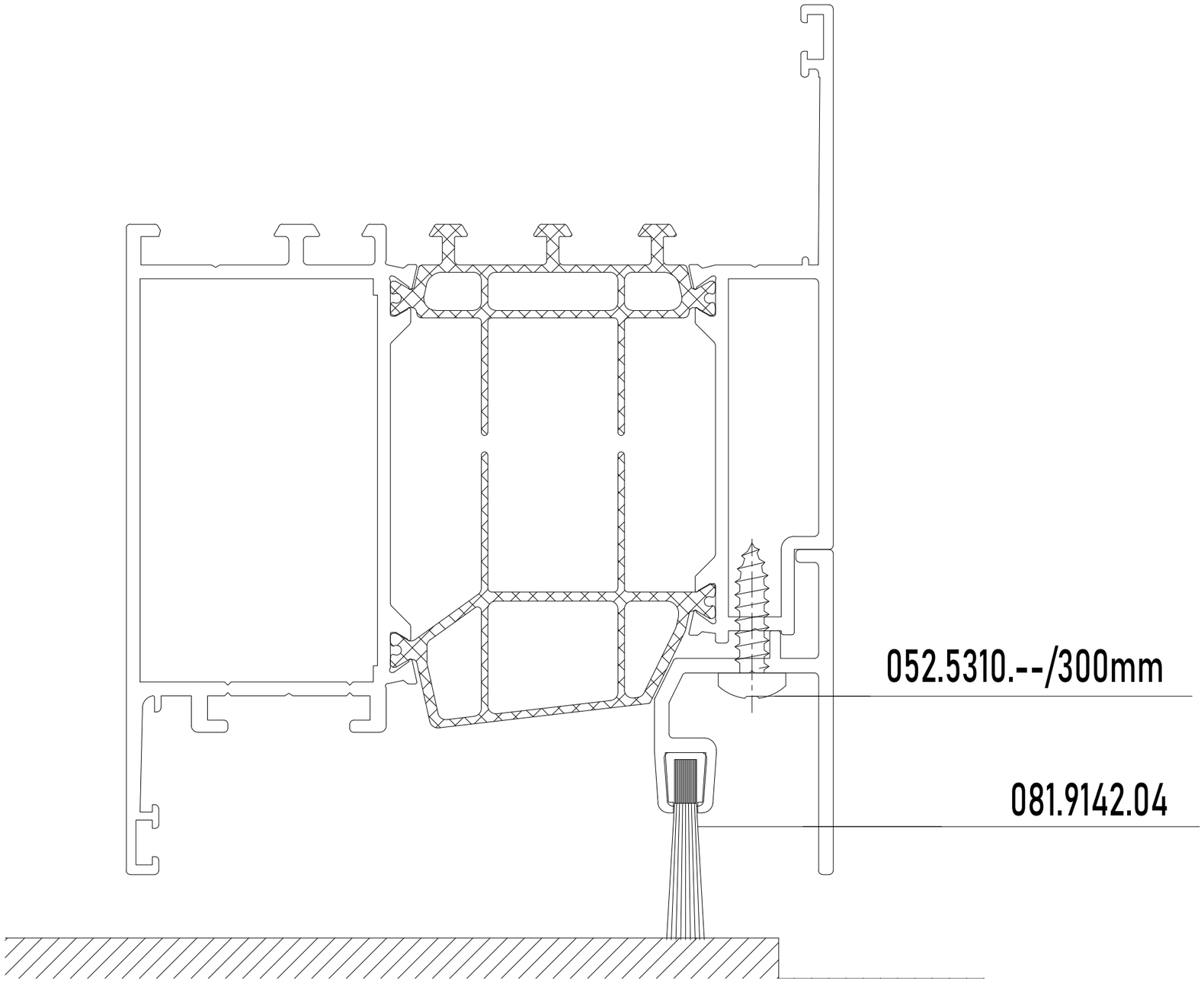

WINDOW-DOOR BRUSH

WINDOW-DOOR WITH BRUSH

MASTERLINE 8-Fu

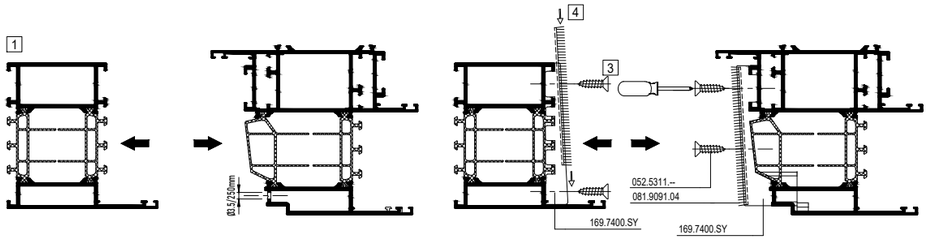

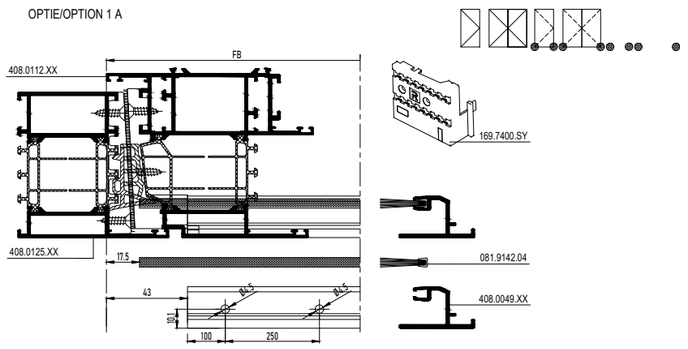

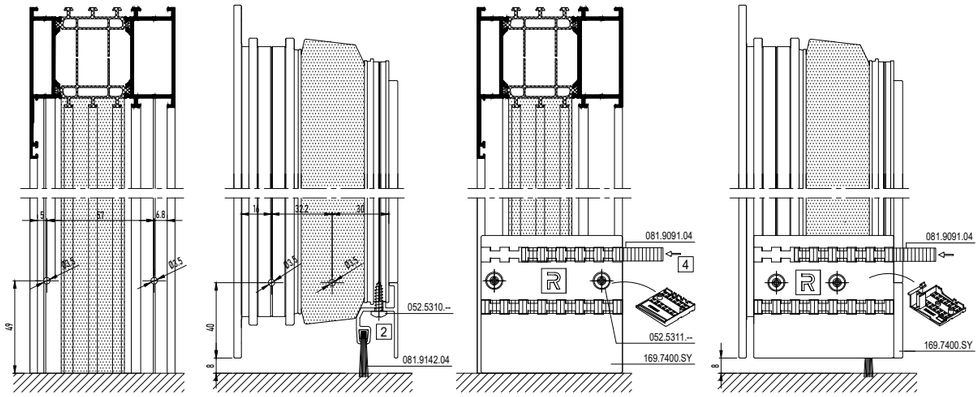

MONTAGEVOLGORDE
L'ORDRE DE MONTAGE
THE ORDER OF ASSEMBLY
MONTAGEREIHENFOLGE
1 2 3 .

WINDOW-DOOR BRUSH

WINDOW-DOOR WITH BRUSH

MASTERLINE 8-Fu

OPTIE/OPTION 1 B

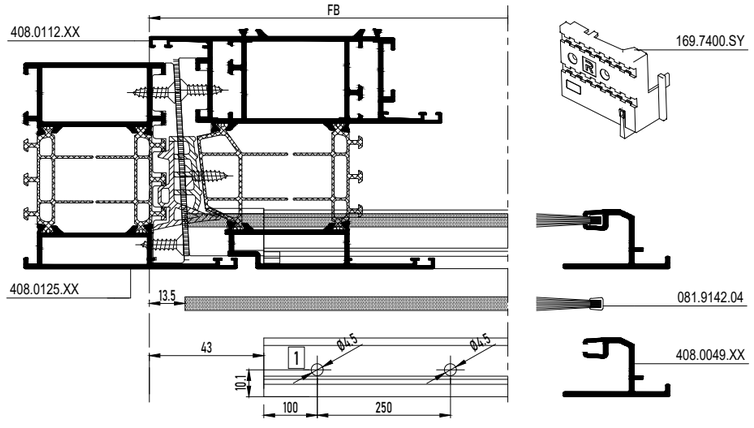

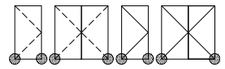

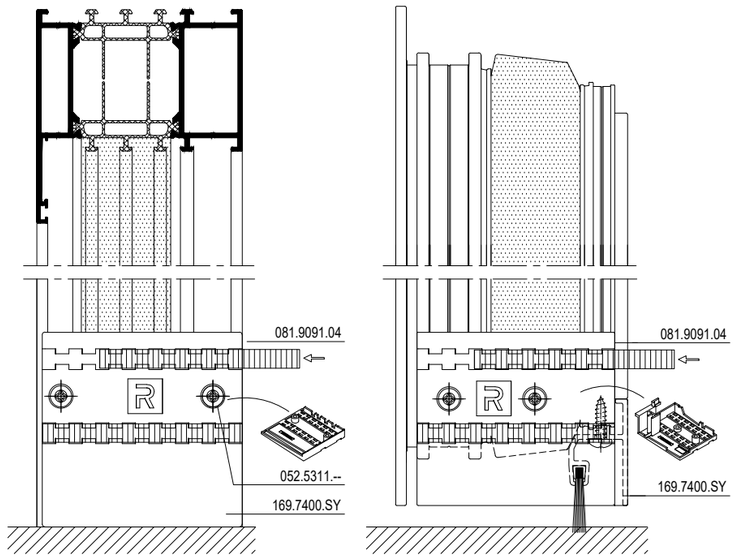

Zie/voir/see/siehe optie/option 1 A

MONTAGEVOLGORDE L 'ORDRE DE MONTAGE THE ORDER OF ASSEMBLY MONTAGEREIHENFOLGE	1 2 3 .

WINDOW-DOOR BRUSH

WINDOW-DOOR WITH BRUSH

MASTERLINE 8-Fu

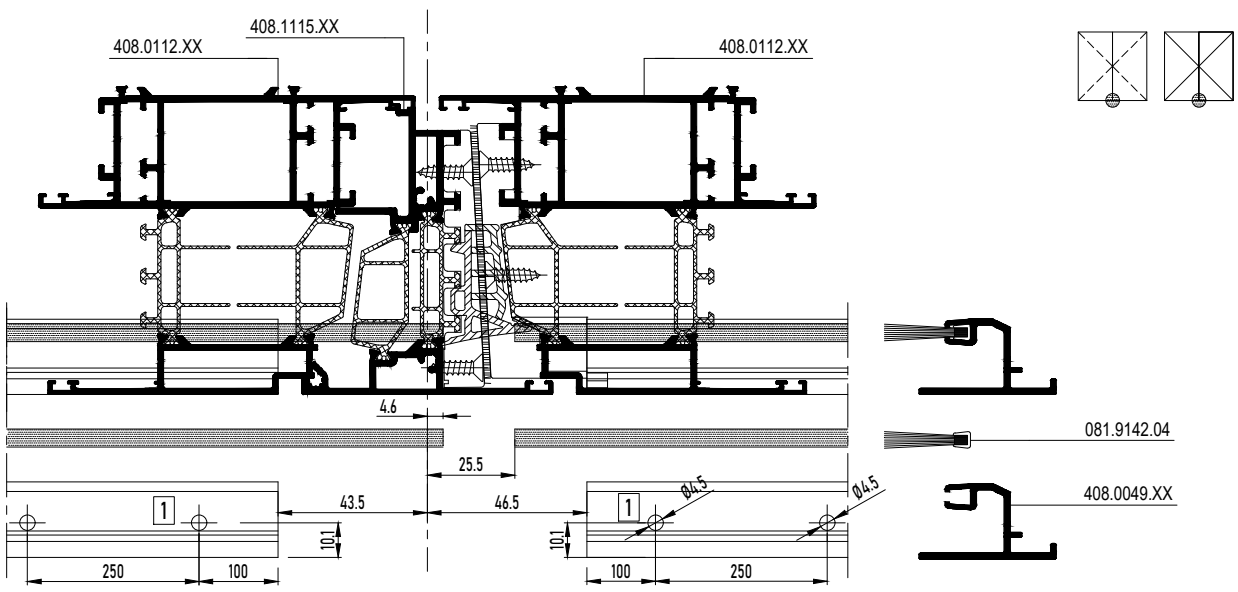

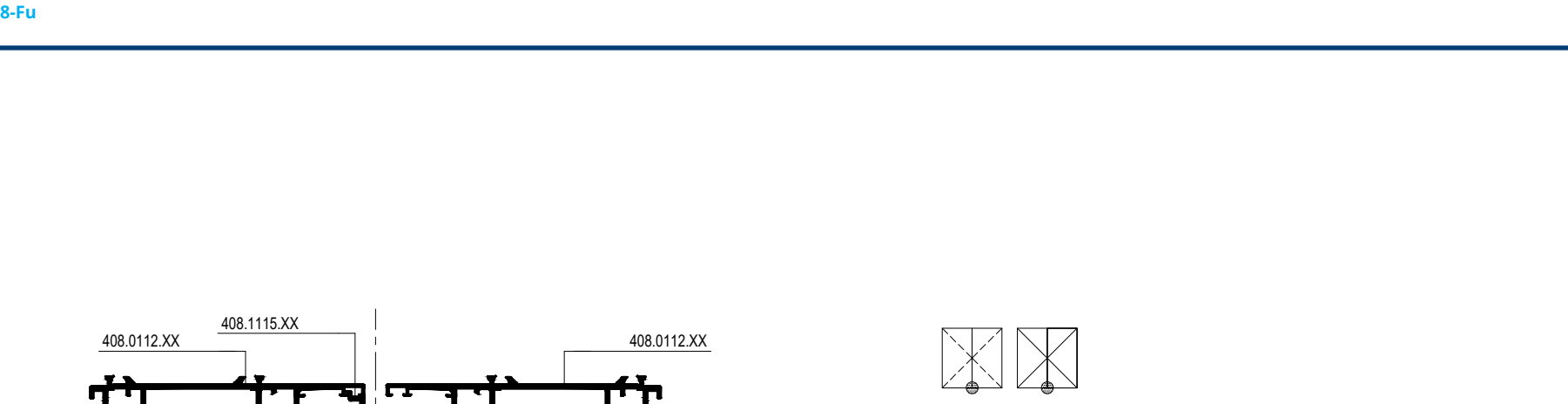

Zie/voir/see/siehe optie/option 1 A

MONTAGEVOLGORDE L'ORDRE DE MONTAGE THE ORDER OF ASSEMBLY MONTAGEREIHENFOLGE	1 2 3 .

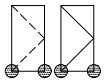

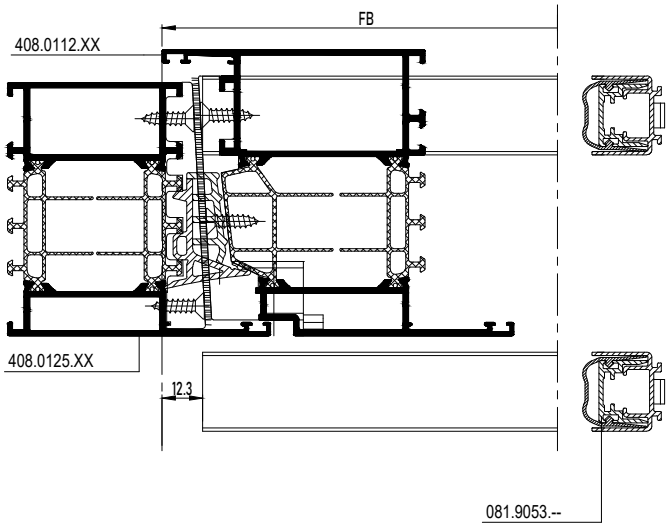

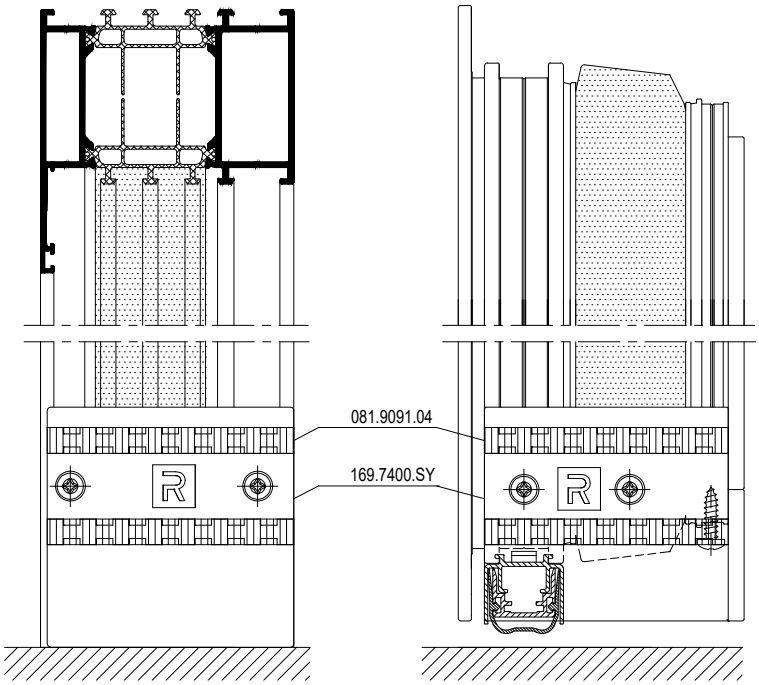

Zie/voir/see/siehe optie/option 1 A

MONTAGEVOLGORDE L'ORDRE DE MONTAGE THE ORDER OF ASSEMBLY MONTAGEREIHENFOLGE	1	2	3	.



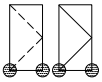

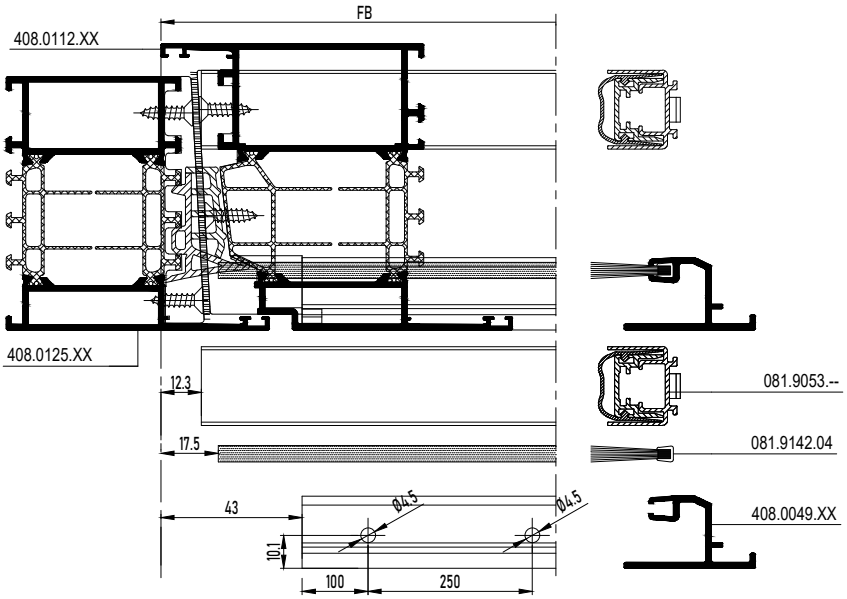
FB
408.0112.XX
408.0125.XX
12.3
17.5
43
Ø4.5
Ø4.5
10.1
100
250
081.9053.--
081.9142.04
408.0049.XX

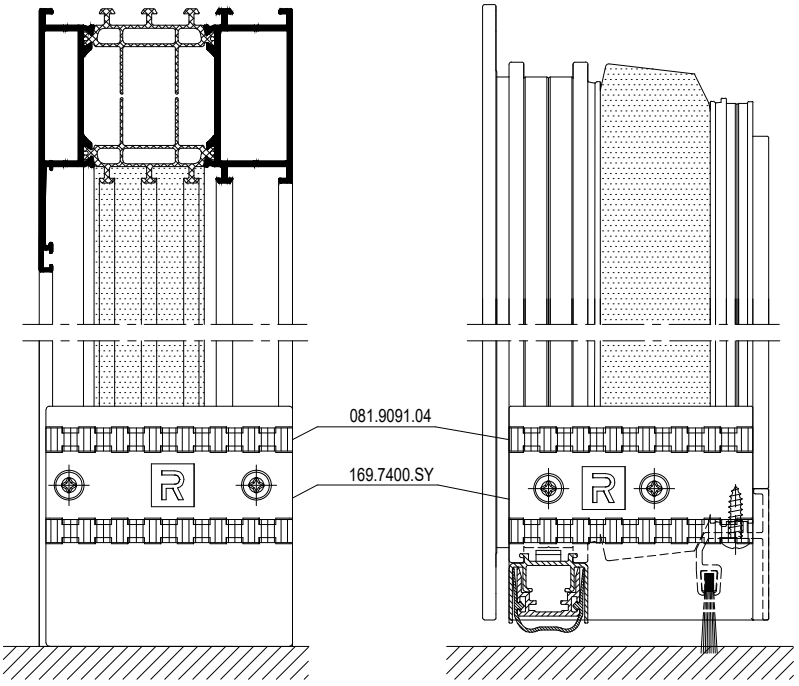
081.9091.04
169.7400.SY



OVERVIEW CORNER CLEATS BALCONY DOOR

POSITIONING OF CORNER CLEATS

MASTERLINE 8-Fu

TYPE 1

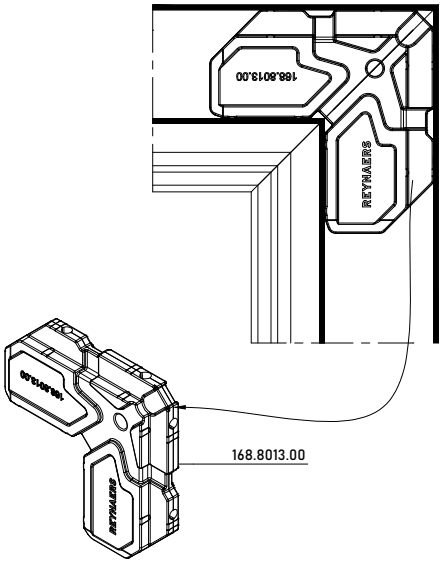

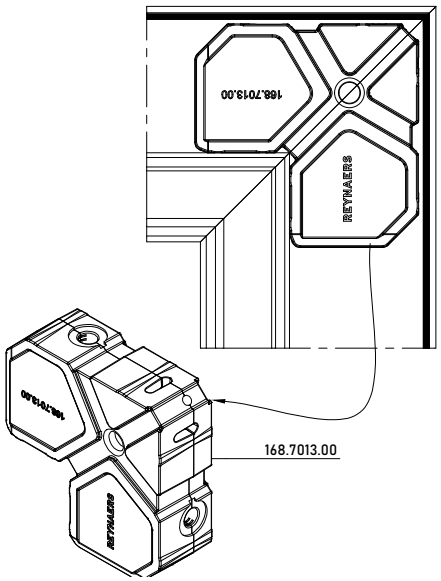

TYPE 2

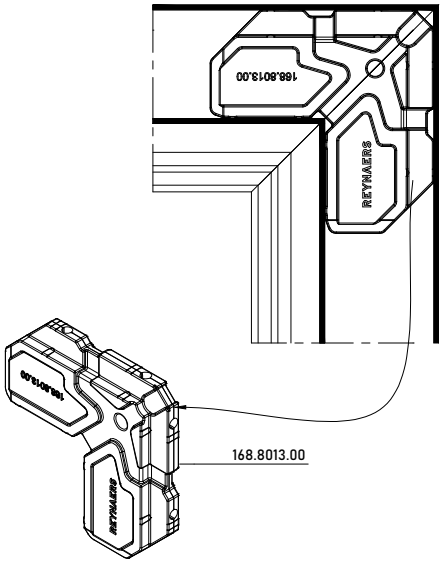

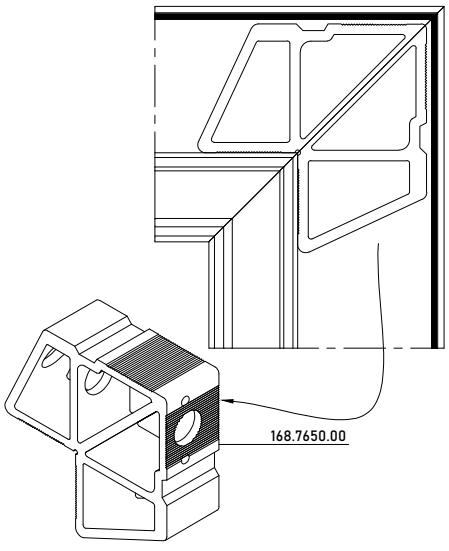

OVERVIEW CORNER CLEATS BALCONY DOOR

POSITIONING OF CORNER CLEATS

MASTERLINE 8-Fu

HOEKVERBINDERS
EQUERRES
CORNER CLEATS
ECKVERBINDERS

168.7013.00 (7013)
168.7650.00 (7650)
168.8013.00 (8013)

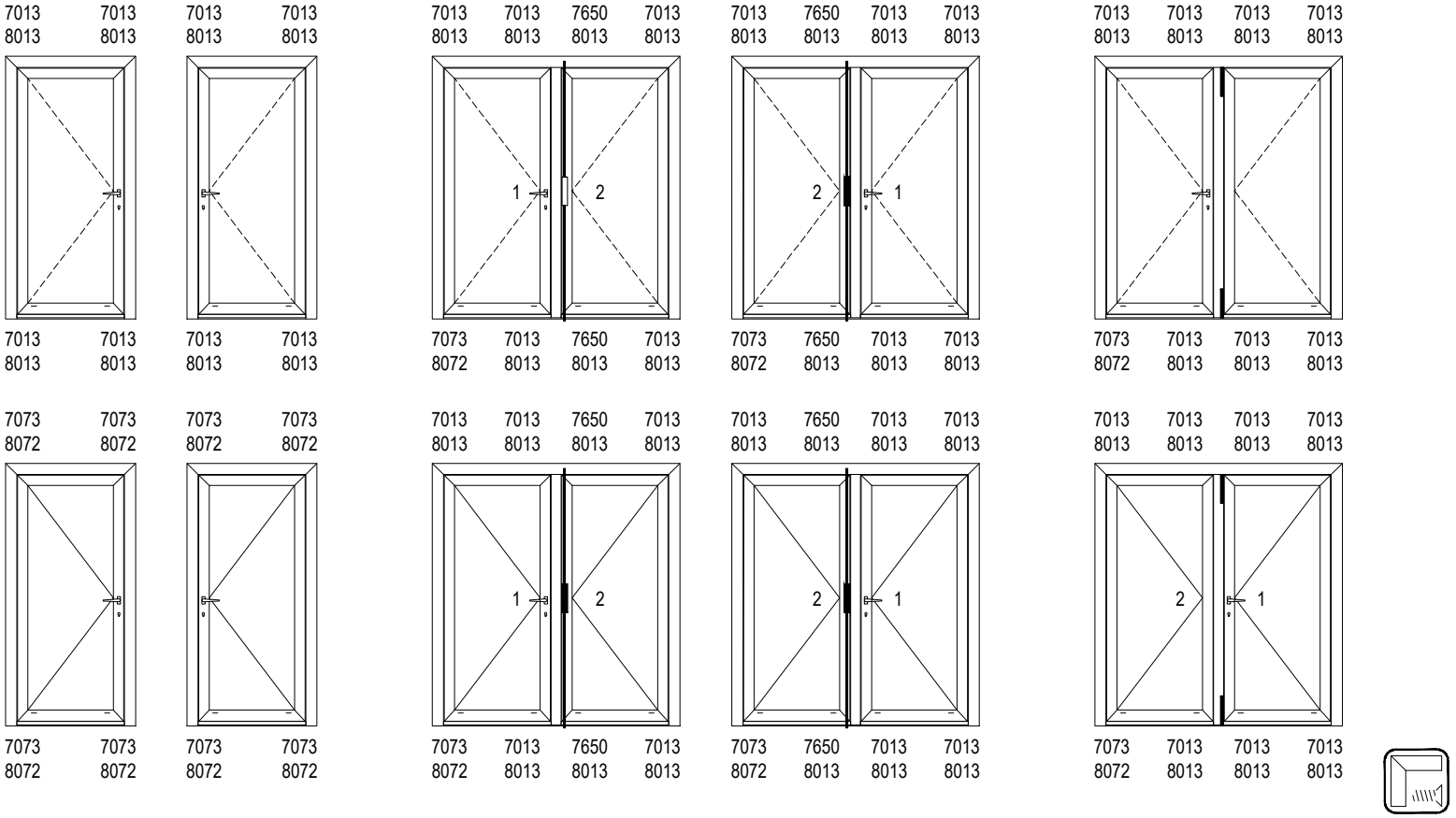

DRAINAGE MC BALCONY DOOR

DRAINAGE VENT

MASTERLINE 8-Fu





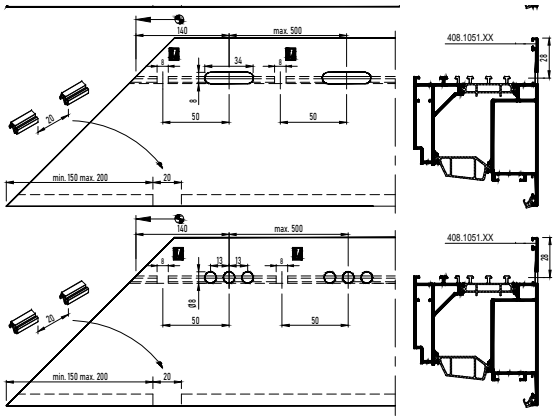

DRAINAGE MC BALCONY DOOR

DRAINAGE VENT

MASTERLINE 8-Fu

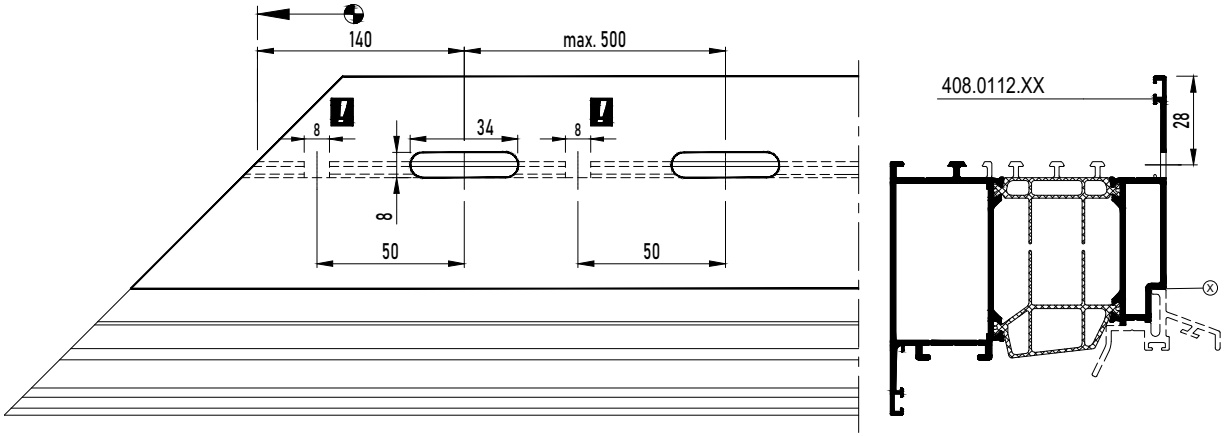

DRAINAGE MC BALCONY DOOR

DRAINAGE VENT

MASTERLINE 8-Fu

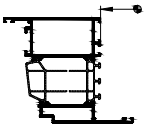

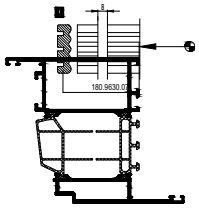

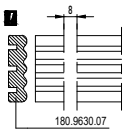

DRAINAGE MC BALCONY DOOR

DRAINAGE VENT

MASTERLINE 8-Fu

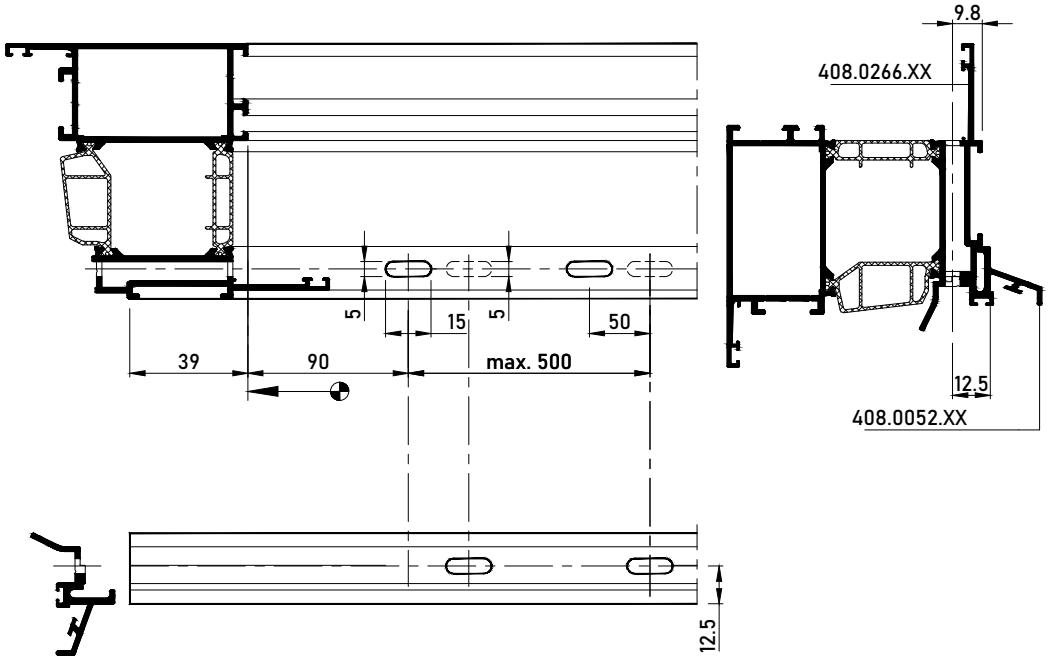

DRAINAGE MFPT BALCONY DOOR

DRAINAGE VENT | 097.0183.00

MASTERLINE 8-Fu

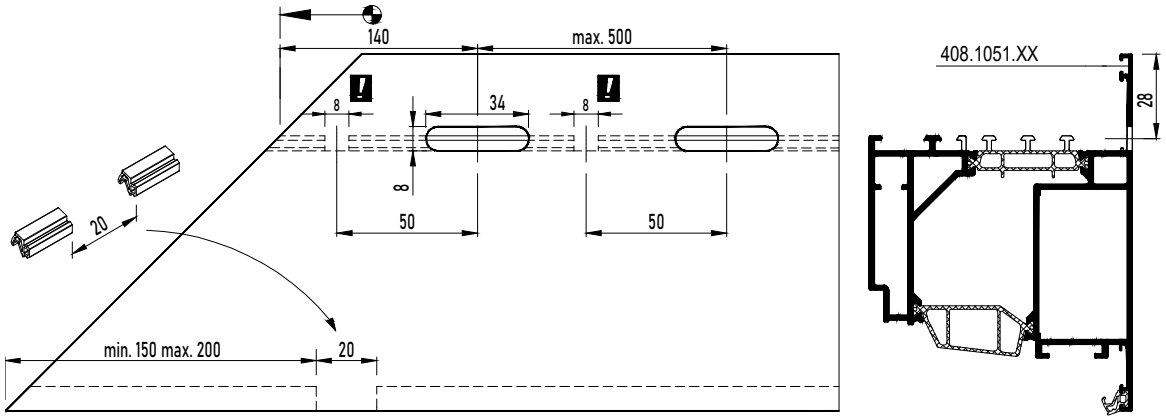

DRAINAGE MFPT BALCONY DOOR

DRAINAGE VENT

MASTERLINE 8-Fu

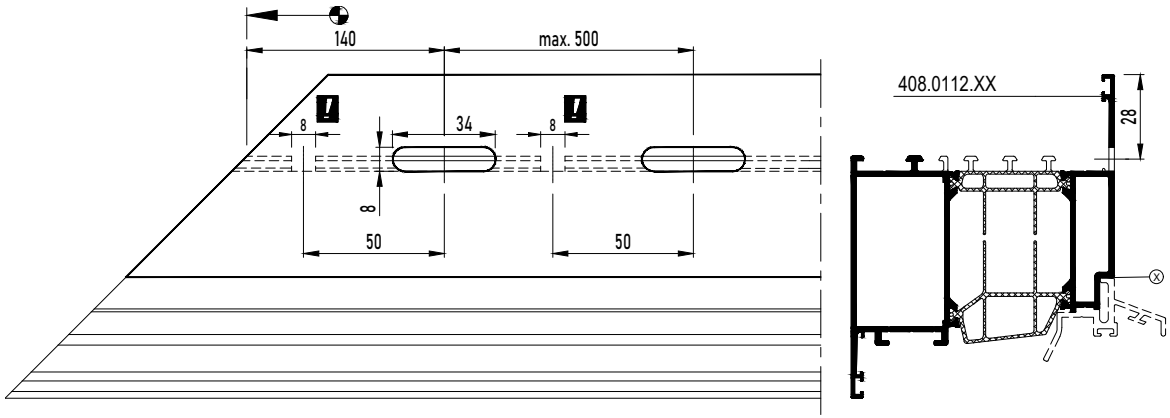

DRAINAGE MFPT BALCONY DOOR

DRAINAGE VENT

MASTERLINE 8-Fu

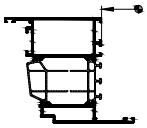

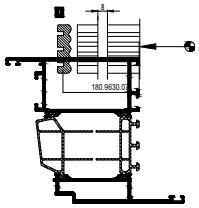

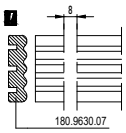

DRAINAGE MFPT BALCONY DOOR

DRAINAGE VENT | 097.0183.00

MASTERLINE 8-Fu

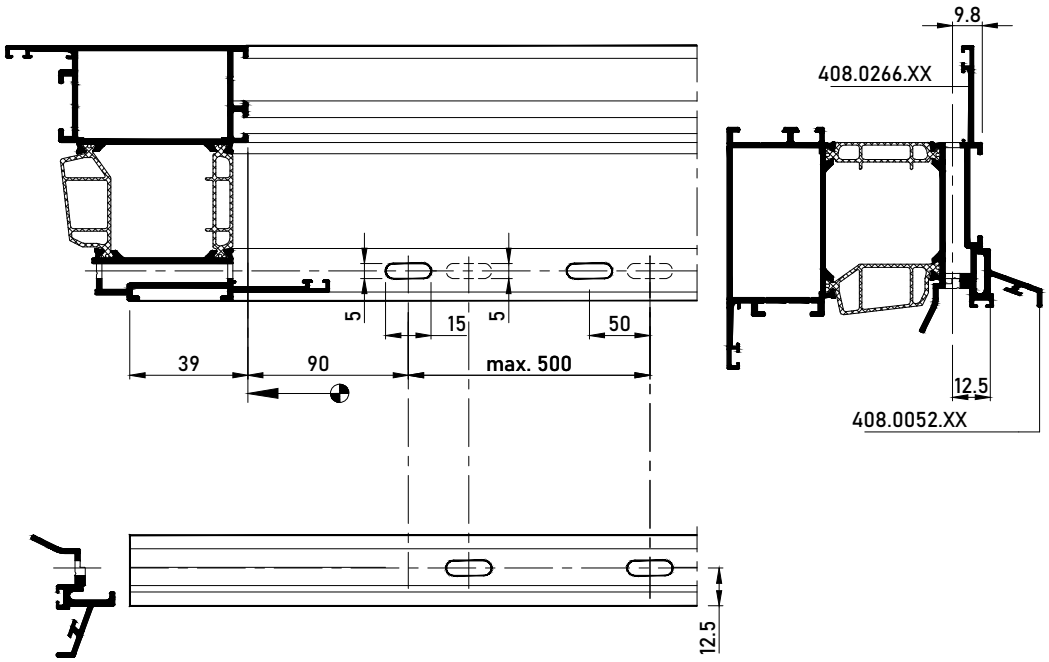

DRAINAGE JIG BALCONY DOOR

DRAINAGE VENT

MASTERLINE 8-Fu

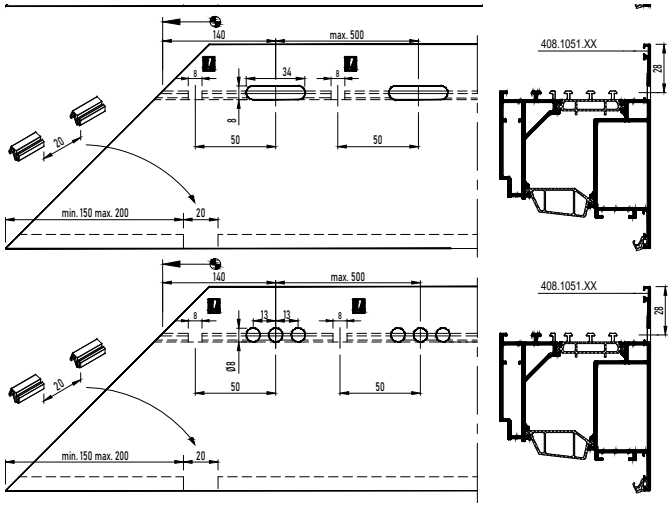

DRAINAGE JIG BALCONY DOOR

DRAINAGE VENT

MASTERLINE 8-Fu

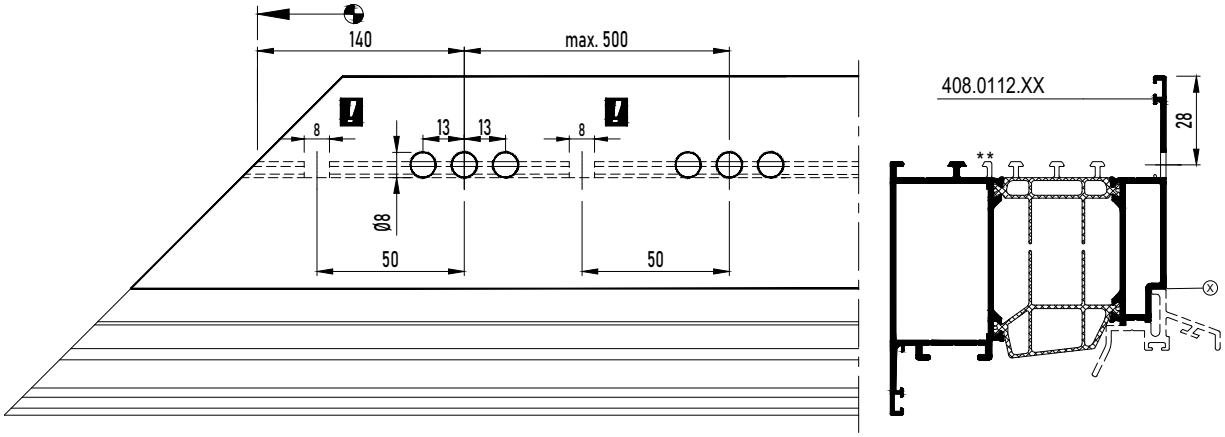

DRAINAGE JIG BALCONY DOOR

DRAINAGE VENT

MASTERLINE 8-Fu

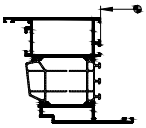

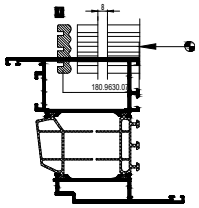

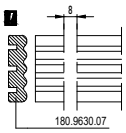

DRAINAGE CR BALCONY DOOR

DRAINAGE VENT

MASTERLINE 8-Fu





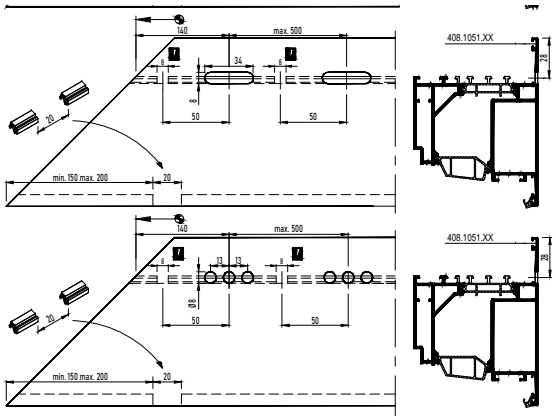

DRAINAGE CR BALCONY DOOR

DRAINAGE VENT

MASTERLINE 8-Fu

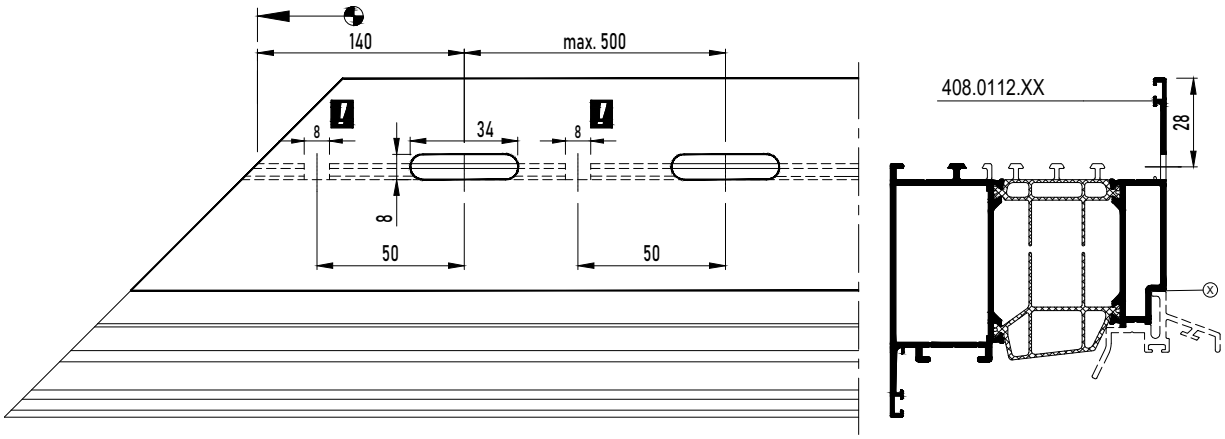

DRAINAGE CR BALCONY DOOR

DRAINAGE VENT

MASTERLINE 8-Fu

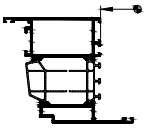

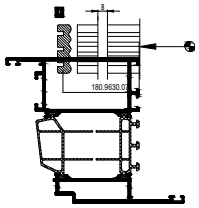

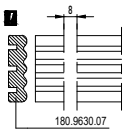

DRAINAGE CR BALCONY DOOR

DRAINAGE VENT

MASTERLINE 8-Fu

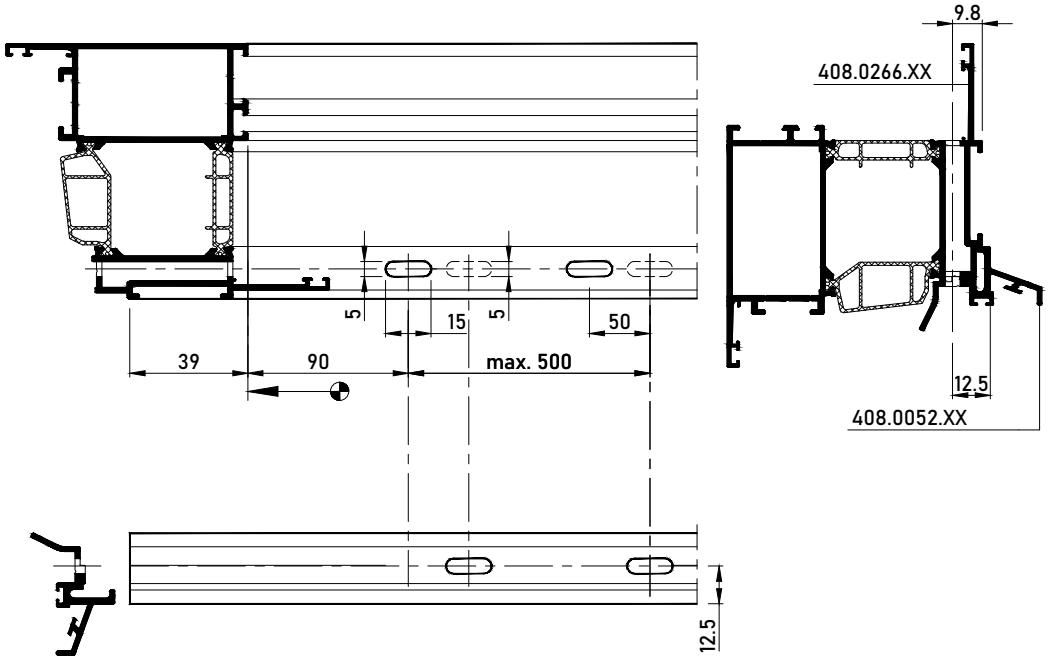

DRAINAGE CR BALCONY DOOR

DRAINAGE VENT

MASTERLINE 8-Fu

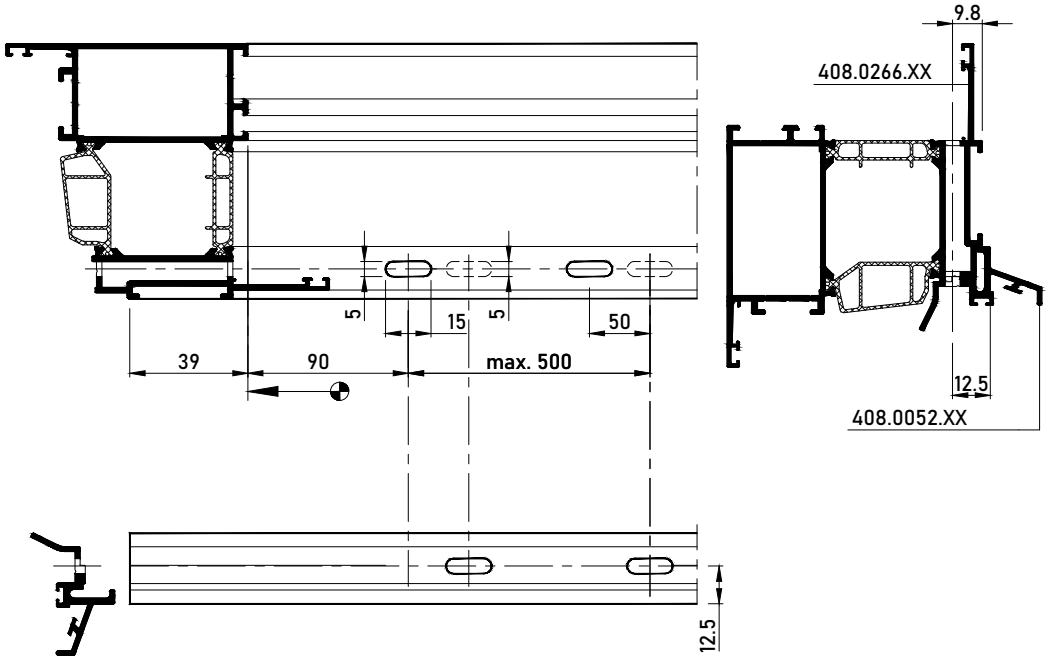

DECOMPRESSION BALCONY DOOR

DECOMPRESSION

MASTERLINE 8-Fu

DECOMPRESSIE BALKONDEUR
DECOMPRESSION SEUIL PORTE-FENÊTRE PMR
DECOMPRESSION BALCONY DOOR
DEKOMPRESSION BALKONTÜR

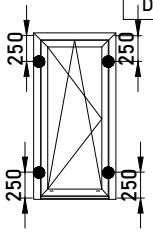



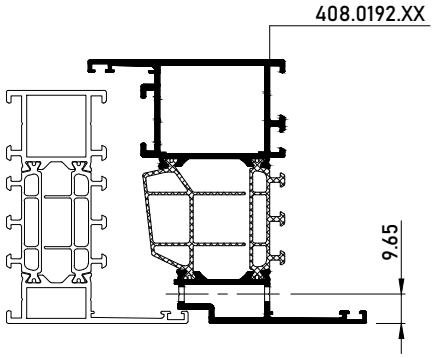

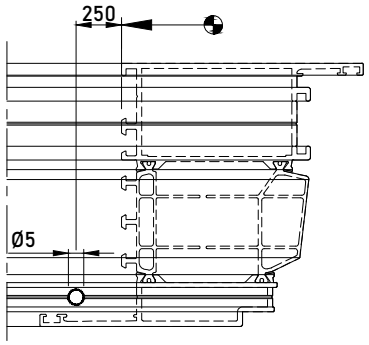



DECOMPRESSION BALCONY DOOR

DECOMPRESSION

MASTERLINE 8-Fu

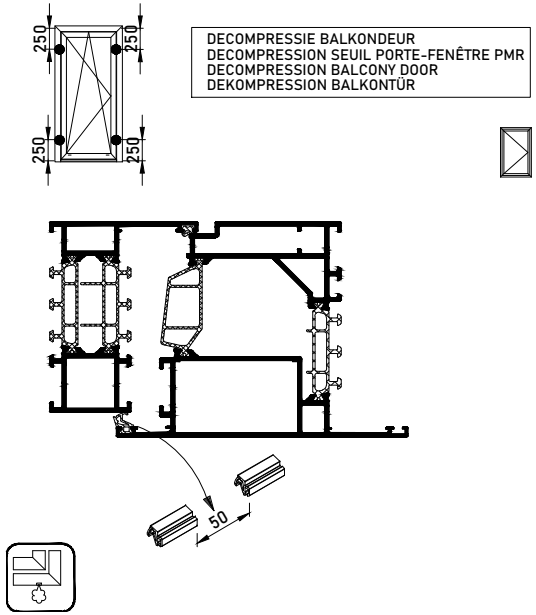

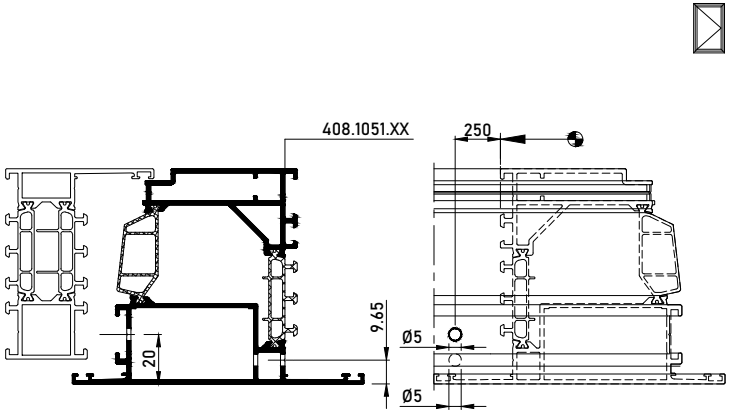

BOTTOM SOLUTION BALCONY DOOR

BOTTOM SECTION BALCONY DOOR

MASTERLINE 8-Fu

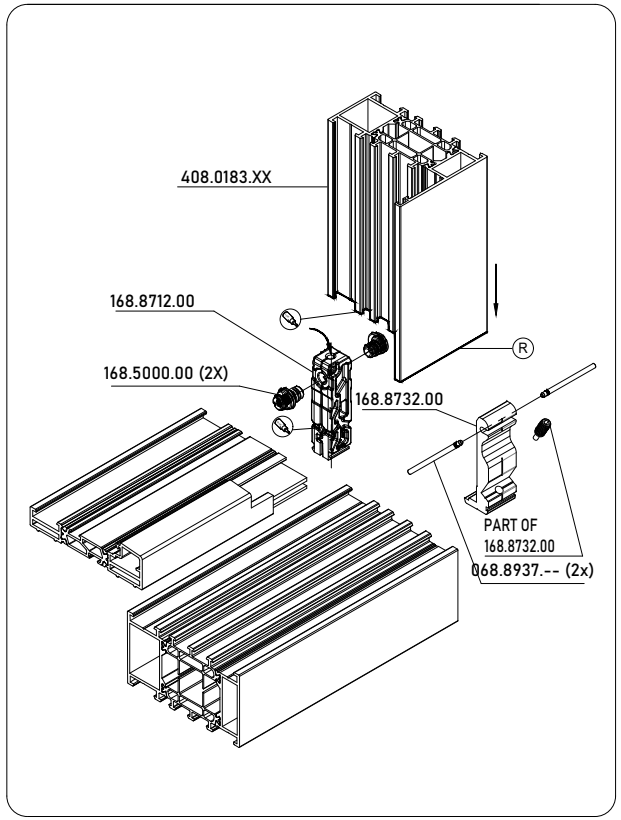

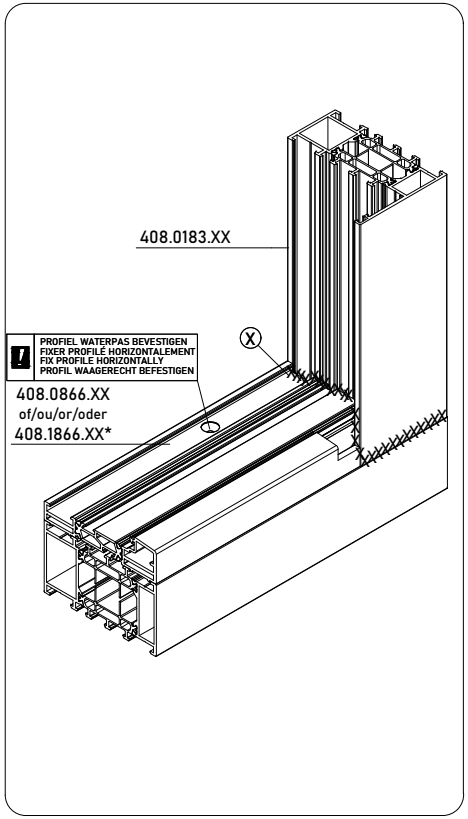

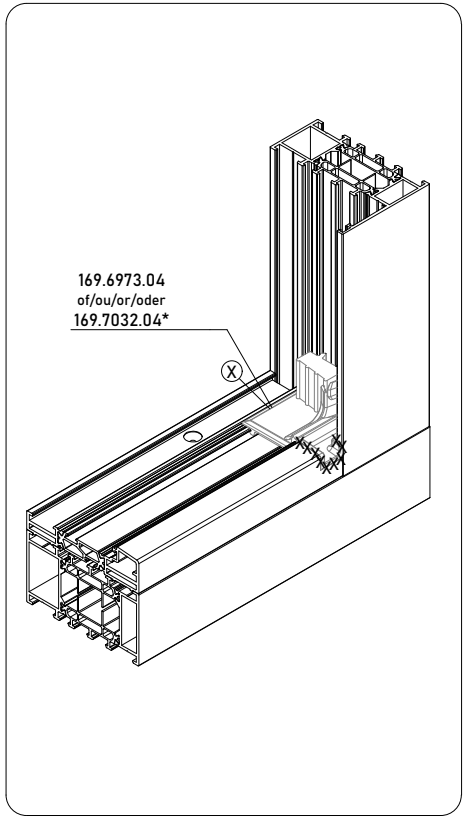

REYNASEAL DUO REYNASEAL DUO REYNASEAL DUO REYNASEAL DUO	REYNAPROTECTOR REYNAPROTECTOR REYNAPROTECTOR REYNAPROTECTOR	DICHTINGSMIDDEL MATIERE D'ETANCHEITE SEALING AGENT ABDICHTUNG

MONTAGEVOLGORDE
L 'ORDRE DE MONTAGE
THE ORDER OF ASSEMBLY
MONTAGEREIHENFOLGE
1 2 3 .

BIJKOMENDE INFO VOORBEREIDING/VERWERKING -> ZIE HOOFDSTUK F 'VERWERKINGSVOORSCHRIFTEN' !
INFO COMPLEMENTAIRE PREPARATION/USINAGE -> VOIR CHAPITRE F 'PRESCRIPTIONS DE MISE EN OEUVRE' !
ADDITIONAL INFO PREPARATION/PROCESSING -> SEE CHAPTER F 'PROCESSING DATA' !
ZUSAETZLICHE INFO VORBEREITUNG/VERARBEITUNG -> SIEHE KAPITEL F 'VERARBEITUNGSVORSCHRIFTEN' !

VOOR VERBORGEN BESLAG*
POUR LES ACCESSOIRES CACHÉS*
FOR CONCEALED HARDWARE*
FÜR VERDECKTE HARDWARE*

BOTTOM SOLUTION BALCONY DOOR

BOTTOM SECTION BALCONY DOOR

MASTERLINE 8-Fu

OPTIE/OPTION 1

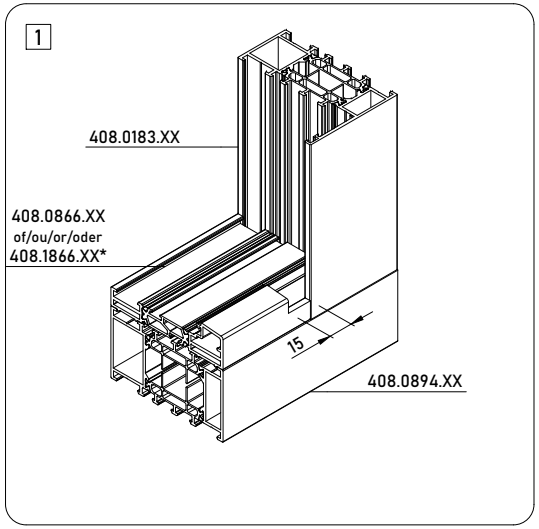

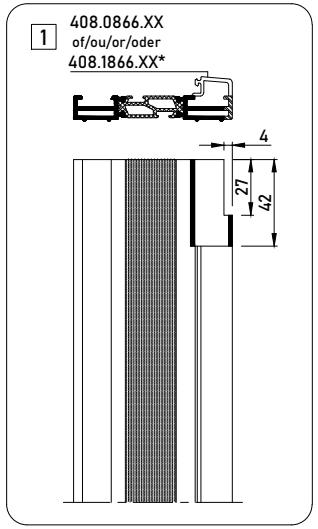

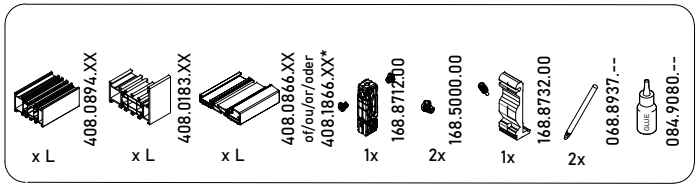

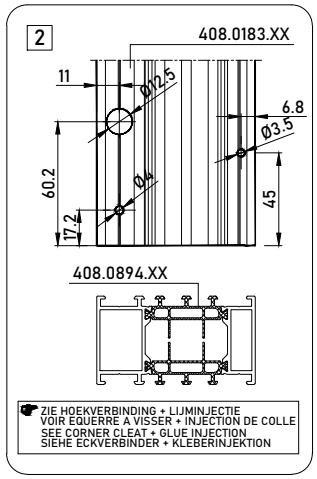

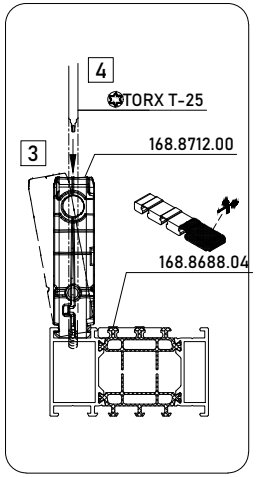

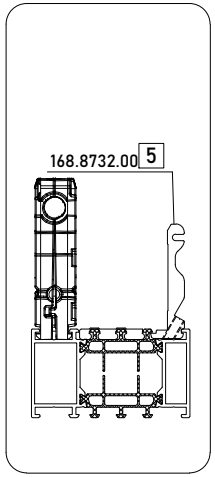

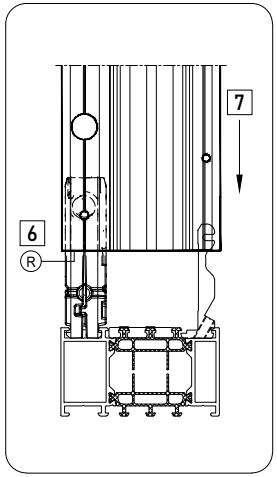

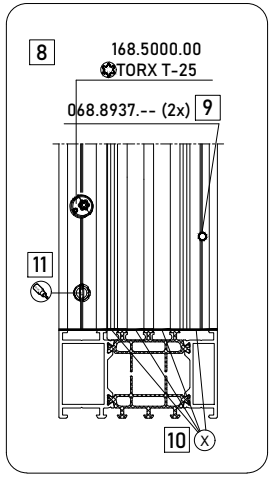

2

	-
	095.E000.00 or 095.N300.00 or 095.B700.00 or 095.C300.00 — 1 2
	095.AKF6.00 — 1 095.B132.00
	095.B300.00 — 2

BOTTOM SOLUTION BALCONY DOOR

BOTTOM SECTION BALCONY DOOR

MASTERLINE 8-Fu

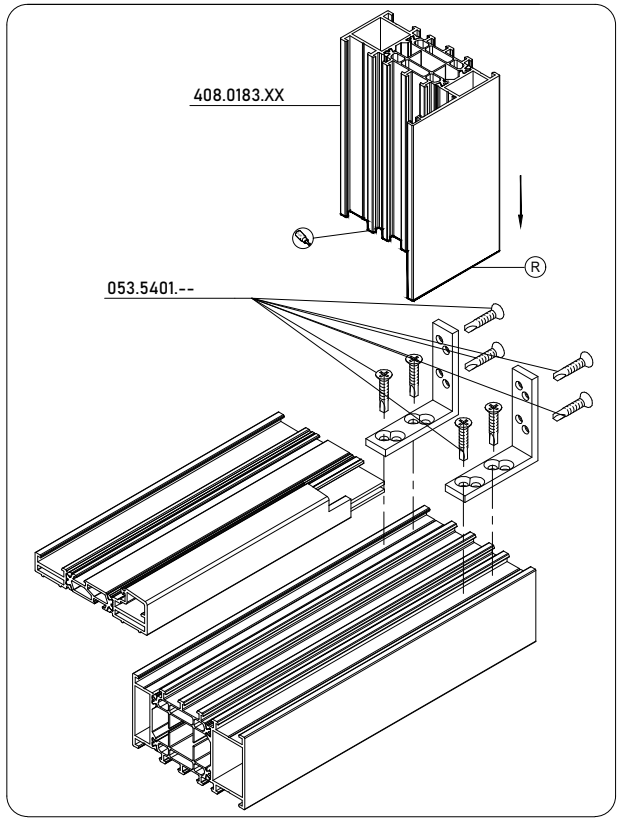

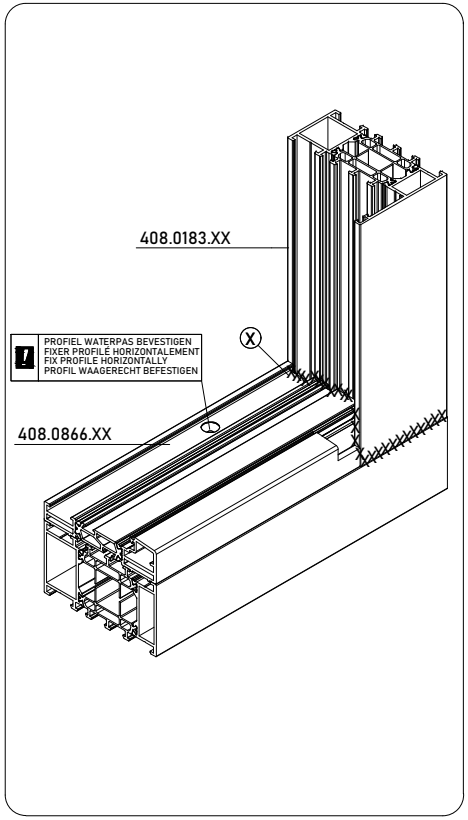

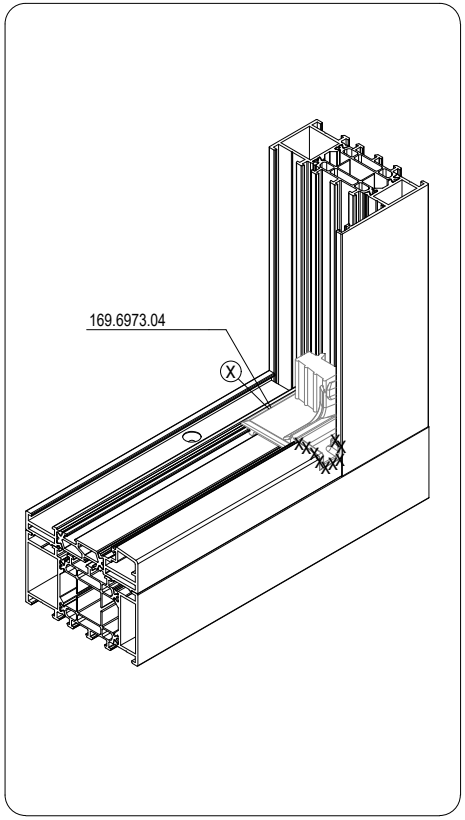

REYNASEAL DUO REYNASEAL DUO REYNASEAL DUO REYNASEAL DUO	R REYNAPROTECTOR REYNAPROTECTOR REYNAPROTECTOR REYNAPROTECTOR	X DICHTINGSMIDDEL MATIERE D'ETANCHEITE SEALING AGENT ABDICHTUNG

MONTAGEVOLGORDE
L 'ORDRE DE MONTAGE
THE ORDER OF ASSEMBLY
MONTAGEREIHENFOLGE
1 2 3 .

BIJKOMENDE INFO VOORBEREIDING/VERWERKING -> ZIE HOOFDSTUK F 'VERWERKINGSVOORSCHRIFTEN' !
INFO COMPLEMENTAIRE PREPARATION/USINAGE -> VOIR CHAPITRE F 'PRESCRIPTIONS DE MISE EN OEUVRE' !
ADDITIONAL INFO PREPARATION/PROCESSING -> SEE CHAPTER F 'PROCESSING DATA' !
ZUSAETZLICHE INFO VORBEREITUNG/VERARBEITUNG -> SIEHE KAPITEL F 'VERARBEITUNGSVORSCHRIFTEN' !

BOTTOM SOLUTION BALCONY DOOR

BOTTOM SECTION BALCONY DOOR

MASTERLINE 8-Fu

OPTIE/OPTION 2

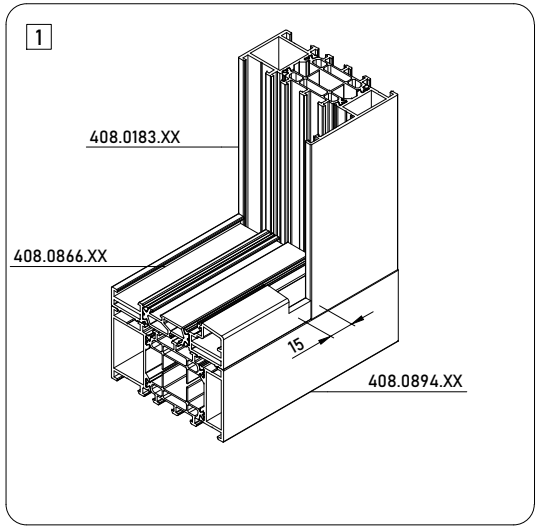

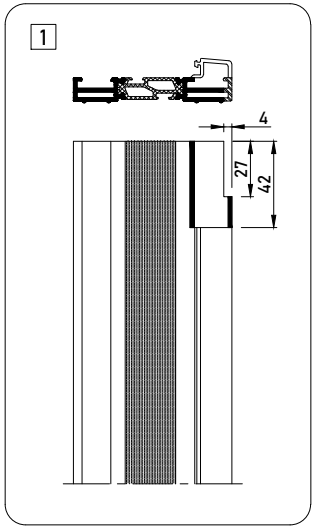

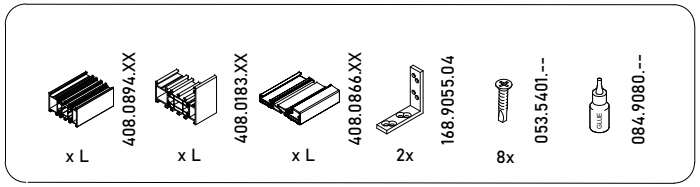

	-
	-
	095.E000.00 or 095.N300.00 or 095.B700.00 or 095.C300.00 [1]
	095.AKF6.00 [1]
	095.B132.00
	-

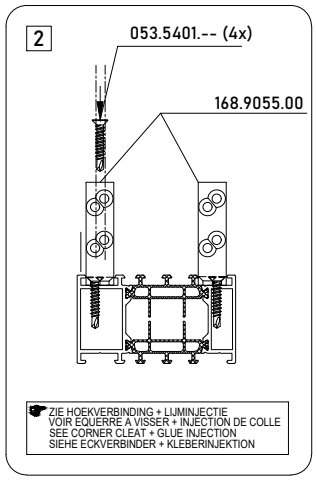

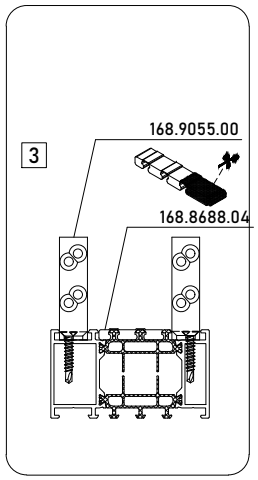

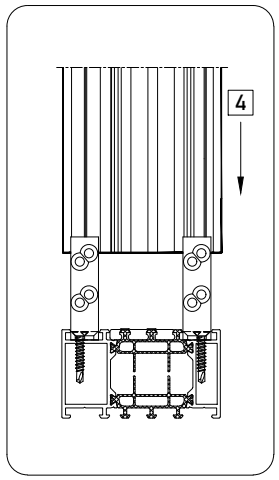

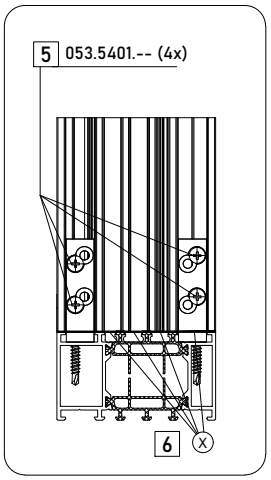

BOTTOM SOLUTION BALCONY DOOR

BOTTOM SECTION BALCONY DOOR

MASTERLINE 8-Fu

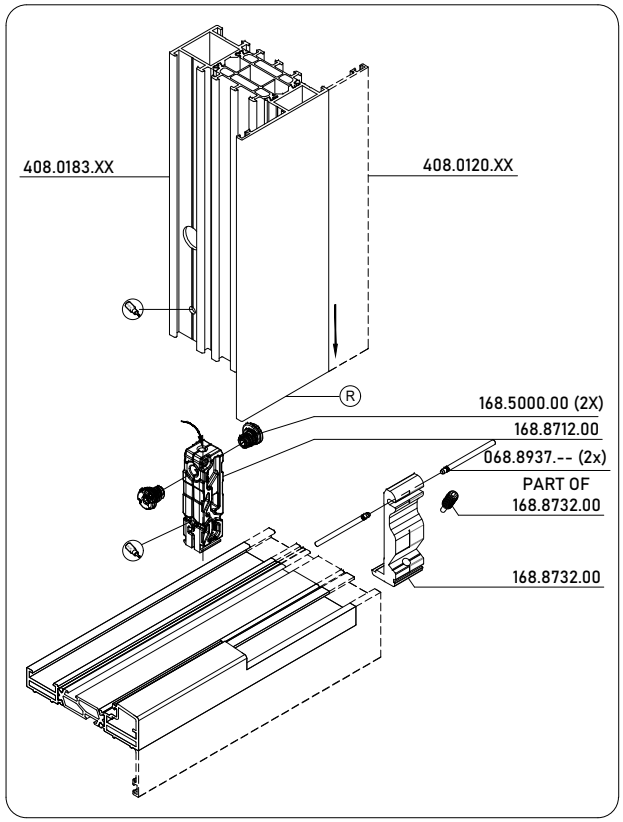

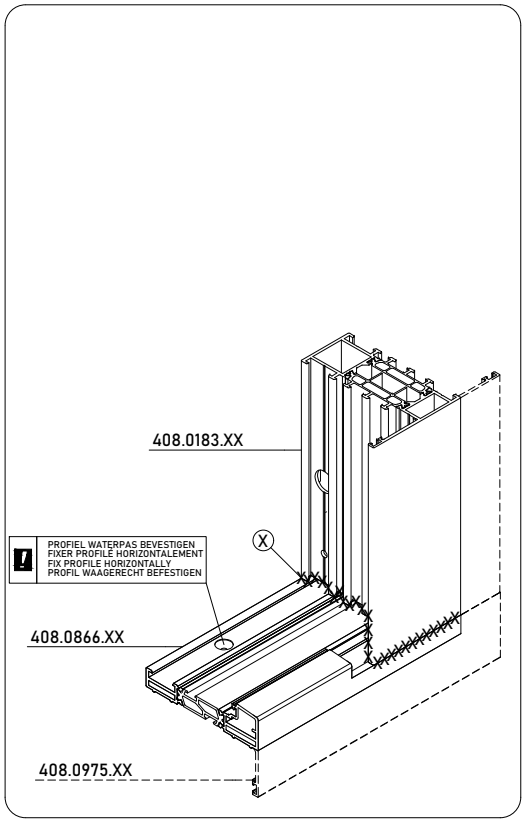

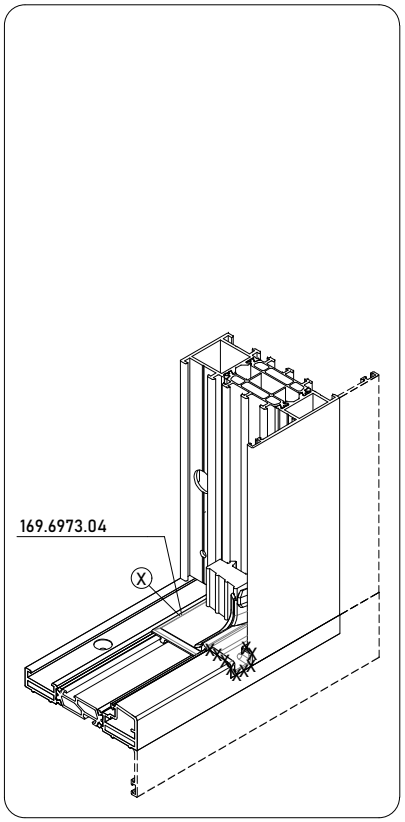

REYNASEAL DUO
REYNASEAL DUO
REYNASEAL DUO
REYNASEAL DUO

R REYNAPROTECTOR
REYNAPROTECTOR
REYNAPROTECTOR
REYNAPROTECTOR

X DICHTINGSMIDDEL
MATIERE D'ETANCHEITE
SEALING AGENT
ABDICHTUNG

MONTAGEVOLGORDE
L 'ORDRE DE MONTAGE
THE ORDER OF ASSEMBLY
MONTAGEREIHENFOLGE
1 2 3 .

BIJKOMENDE INFO VOORBEREIDING/VERWERKING -> ZIE HOOFDSTUK F 'VERWERKINGSVOORSCHRIFTEN' !
INFO COMPLEMENTAIRE PREPARATION/USINAGE -> VOIR CHAPITRE F 'PRESCRIPTIONS DE MISE EN OEUVRE' !
ADDITIONAL INFO PREPARATION/PROCESSING -> SEE CHAPTER F 'PROCESSING DATA' !
ZUSAETZLICHE INFO VORBEREITUNG/VERARBEITUNG -> SIEHE KAPITEL F 'VERARBEITUNGSVORSCHRIFTEN' !

BOTTOM SOLUTION BALCONY DOOR

BOTTOM SECTION BALCONY DOOR

MASTERLINE 8-Fu

OPTIE/OPTION 3

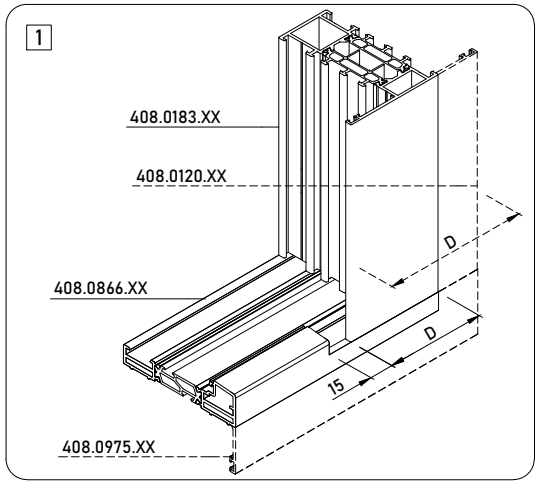

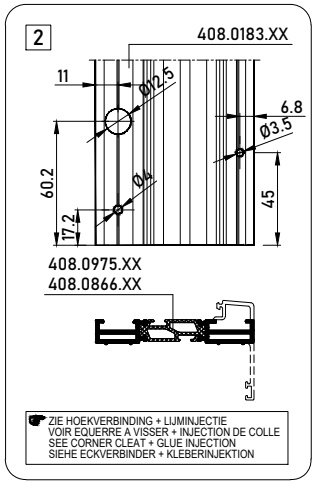

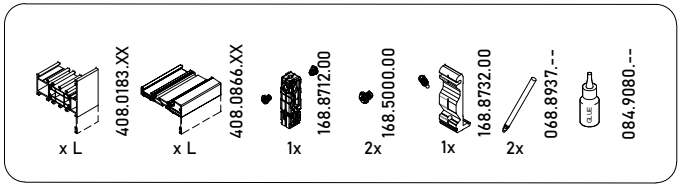

BUITENKADER DORMANT OUTER FRAME BLENDRAHMEN	1 FREZING 408.0866.XX FRAISAGE 408.0866.XX MILLING 408.0866.XX FRAESUNG 408.0866.XX	T-VERBINDER JONCTION-T T-BRACKET T-VERBINDER
408.0183.XX	D + 15	168.8712.00 + 168.8732.00
408.0160.XX	D + 15	168.8713.00 + 168.8733.00
408.0125.XX	D + 15	168.8714.00 + 168.8734.00

	-	
	095.E000.00 or 095.N300.00 or 095.B700.00 or 095.C300.00	1 2
	095.AKF6.00 095.B132.00	1
	095.B300.00	2

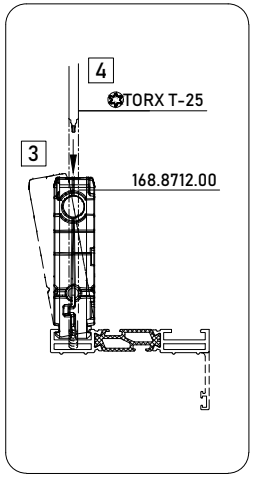

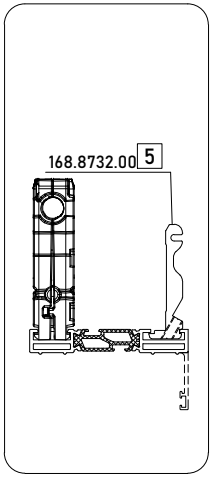

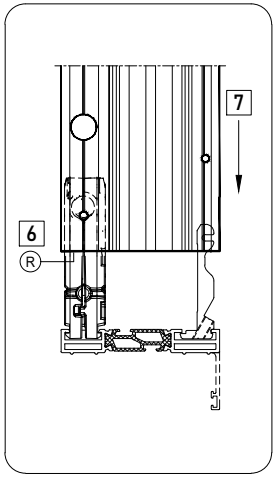

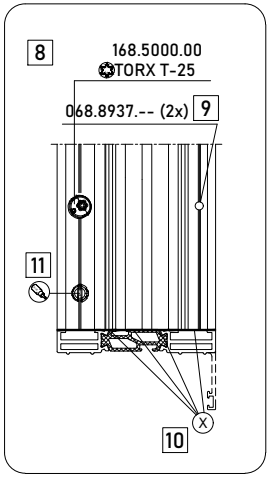

BOTTOM SOLUTION BALCONY DOOR

BOTTOM SECTION BALCONY DOOR | 095.B132.00

MASTERLINE 8-Fu

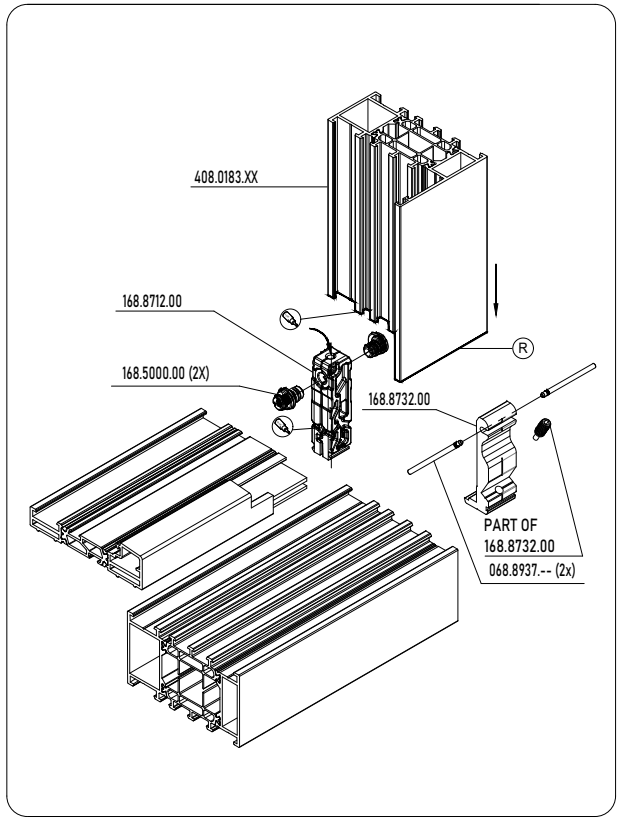

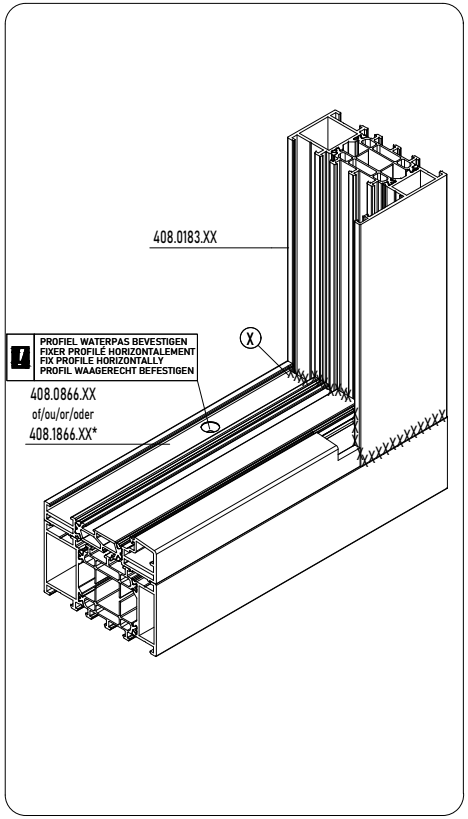

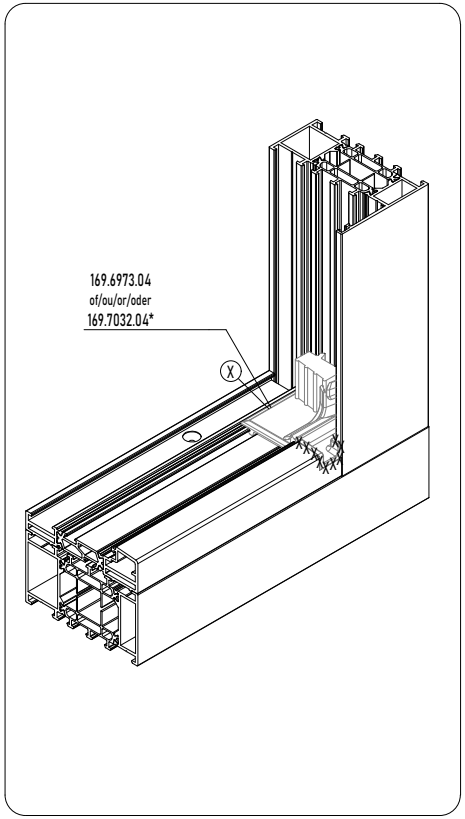

REYNASEAL DUO REYNASEAL DUO REYNASEAL DUO REYNASEAL DUO	REYNAPROTECTOR REYNAPROTECTOR REYNAPROTECTOR REYNAPROTECTOR	DICHTINGSMIDDEL MATIERE D'ETANCHEITE SEALING AGENT ABDICHTUNG

MONTAGEVOLGORDE
L 'ORDRE DE MONTAGE
THE ORDER OF ASSEMBLY
MONTAGEREIHENFOLGE
1 2 3 .

BIJKOMENDE INFO VOORBEREIDING/VERWERKING -> ZIE HOOFDSTUK F 'VERWERKINGSVOORSCHRIFTEN' !
INFO COMPLEMENTAIRE PREPARATION/USINAGE -> VOIR CHAPITRE F 'PRESCRIPTIONS DE MISE EN OEUVRE' !
ADDITIONAL INFO PREPARATION/PROCESSING -> SEE CHAPTER F 'PROCESSING DATA' !
ZUSAETZLICHE INFO VORBEREITUNG/VERARBEITUNG -> SIEHE KAPITEL F 'VERARBEITUNGSVORSCHRIFTEN' !

VOOR VERBORGEN BESLAG*
POUR LES ACCESSOIRES CACHÉS*
FOR CONCEALED HARDWARE*
FÜR VERDECKTE HARDWARE*

BOTTOM SOLUTION BALCONY DOOR

BOTTOM SECTION BALCONY DOOR | 095.B132.00

MASTERLINE 8-Fu

OPTIE/OPTION 1

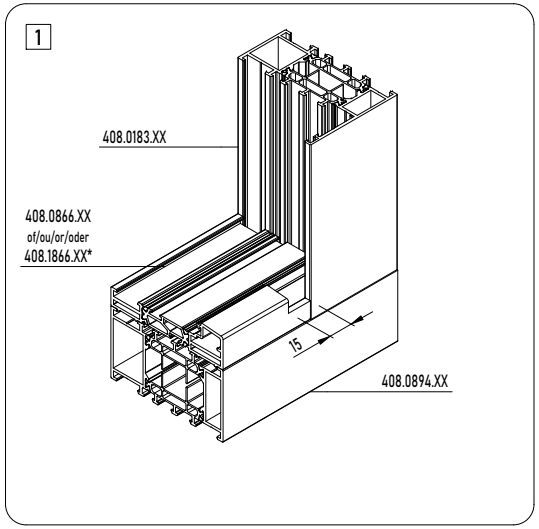

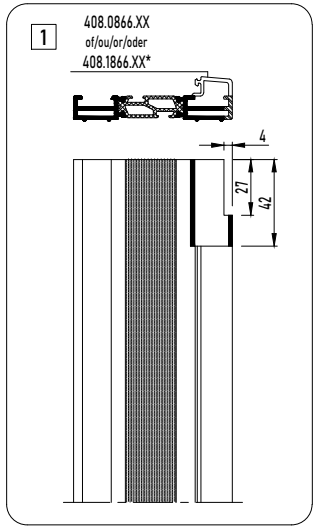

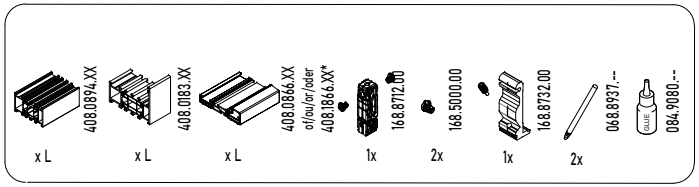

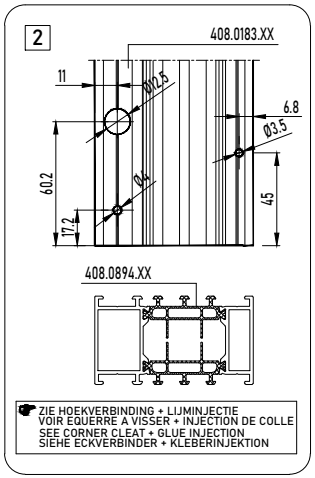

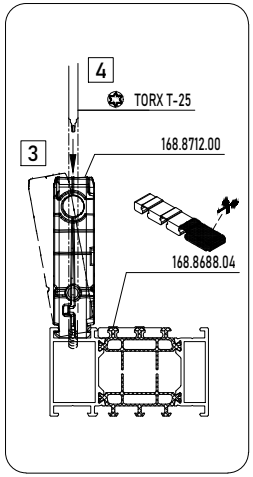

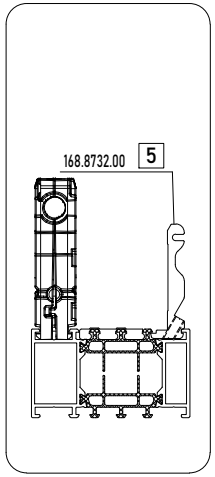

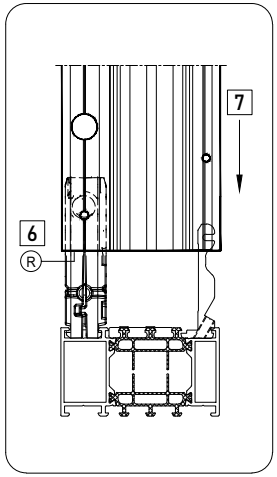

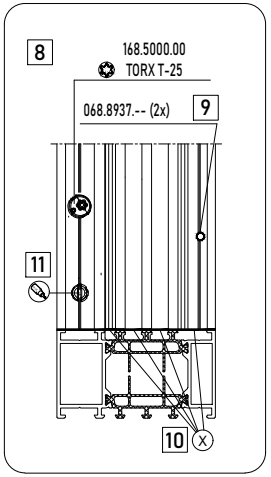

2

	-	-
	095.E000.00 or 095.N300.00 or 095.B700.00 or 095.C300.00	1 2
	095.AKF6.00 095.B132.00	1
	095.B300.00	2

BOTTOM SOLUTION BALCONY DOOR

BOTTOM SECTION BALCONY DOOR | 095.B132.00

MASTERLINE 8-Fu

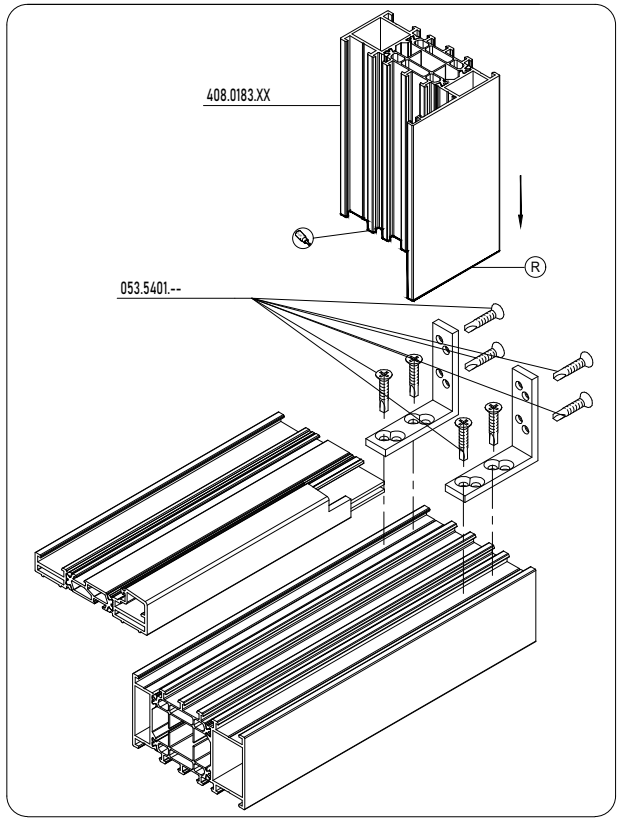

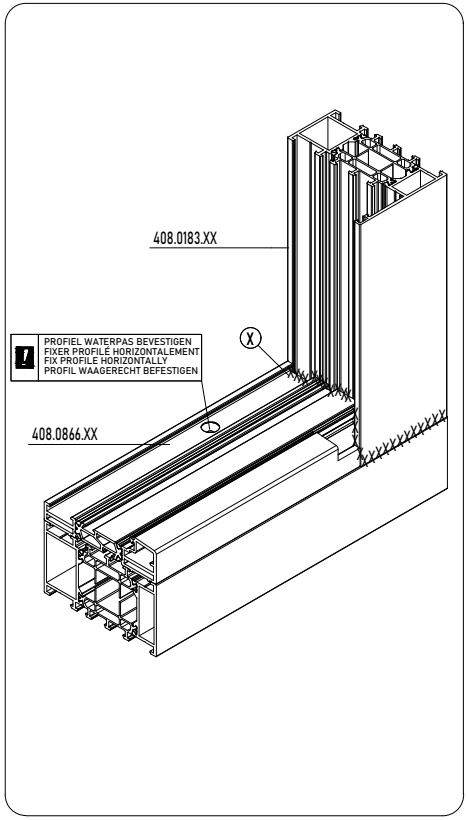

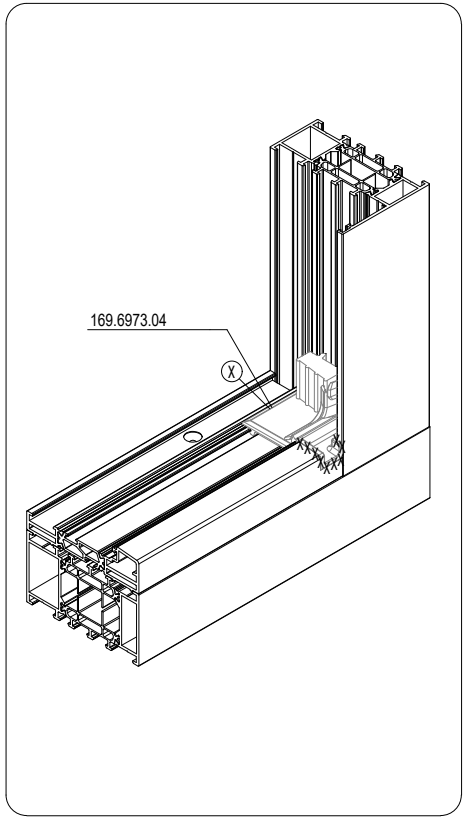

REYNASEAL DUO REYNASEAL DUO REYNASEAL DUO REYNASEAL DUO	REYNAPROTECTOR REYNAPROTECTOR REYNAPROTECTOR REYNAPROTECTOR	DICHTINGSMIDDEL MATIERE D'ETANCHEITE SEALING AGENT ABDICHTUNG

MONTAGEVOLGORDE
L 'ORDRE DE MONTAGE
THE ORDER OF ASSEMBLY
MONTAGEREIHENFOLGE
1 2 3 .

BIJKOMENDE INFO VOORBEREIDING/VERWERKING -> ZIE HOOFDSTUK F 'VERWERKINGSVOORSCHRIFTEN' !
INFO COMPLEMENTAIRE PREPARATION/USINAGE -> VOIR CHAPITRE F 'PRESCRIPTIONS DE MISE EN OEUVRE' !
ADDITIONAL INFO PREPARATION/PROCESSING -> SEE CHAPTER F 'PROCESSING DATA' !
ZUSAETZLICHE INFO VORBEREITUNG/VERARBEITUNG -> SIEHE KAPITEL F 'VERARBEITUNGSVORSCHRIFTEN' !

BOTTOM SOLUTION BALCONY DOOR

BOTTOM SECTION BALCONY DOOR | 095.B132.00

MASTERLINE 8-Fu

OPTIE/OPTION 2

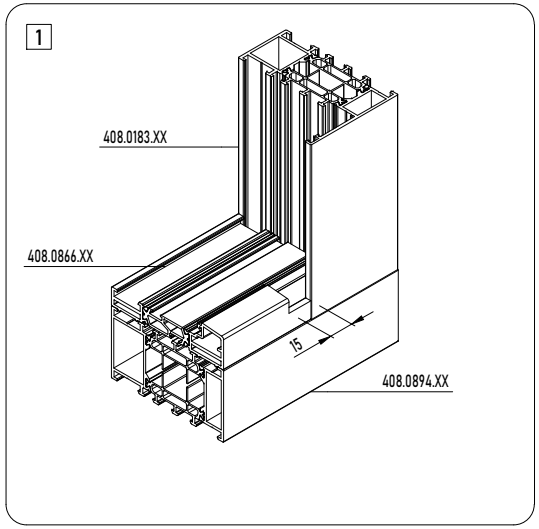

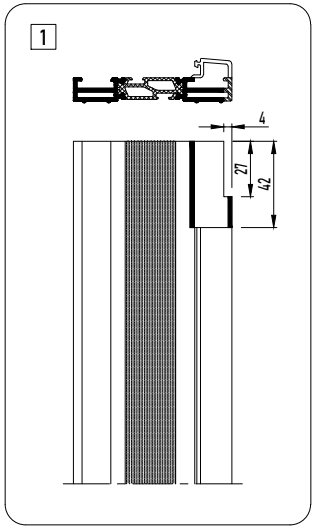

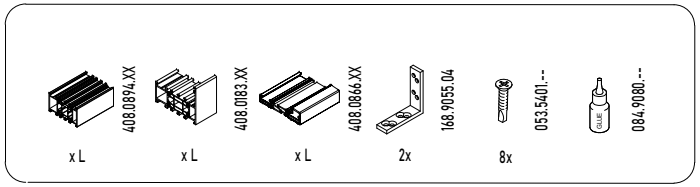

	-
	-
	095.E000.00 or 095.N300.00 or 095.B700.00 or 095.C300.00 1
	095.AKF6.00 1 095.B132.00
	-

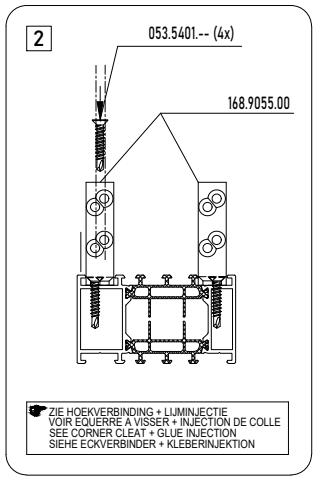

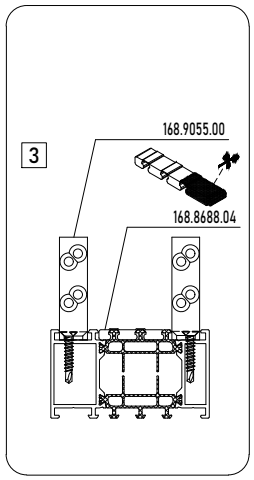

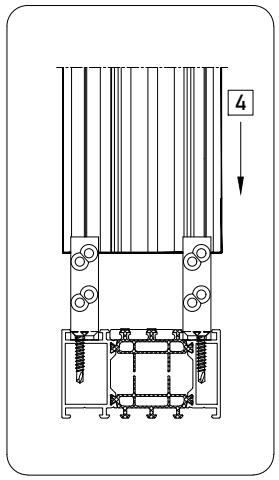

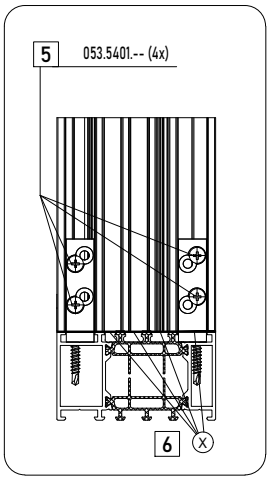

BOTTOM SOLUTION BALCONY DOOR

BOTTOM SECTION BALCONY DOOR | 095.B132.00

MASTERLINE 8-Fu

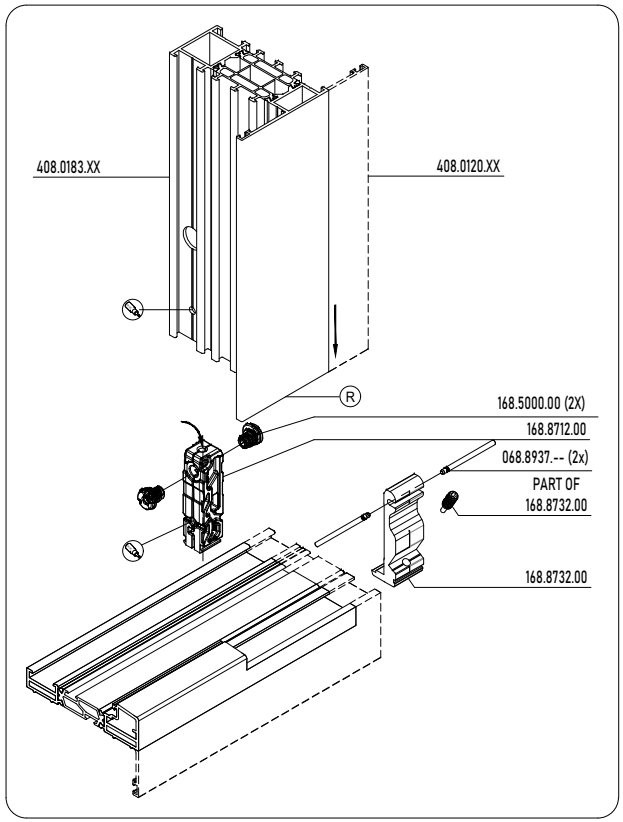

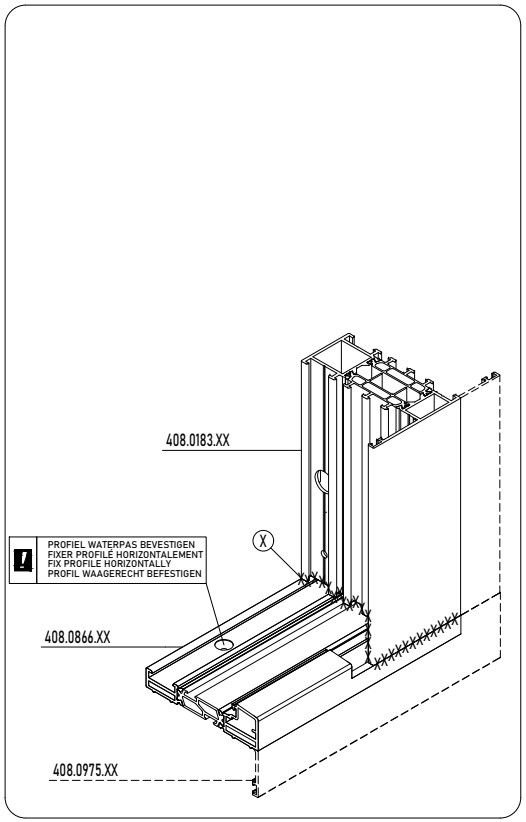

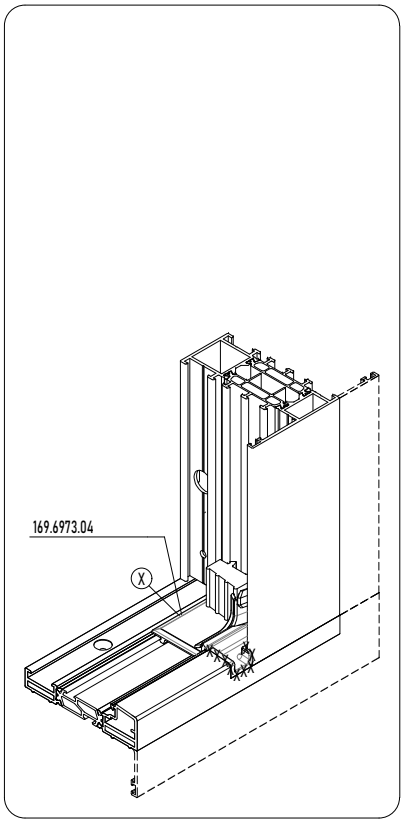

REYNASEAL DUO REYNASEAL DUO REYNASEAL DUO REYNASEAL DUO	REYNAPROTECTOR REYNAPROTECTOR REYNAPROTECTOR REYNAPROTECTOR
DICHTINGSMIDDEL MATIERE D'ETANCHEITE SEALING AGENT ABDICHTUNG	

MONTAGEVOLGORDE
L 'ORDRE DE MONTAGE
THE ORDER OF ASSEMBLY
MONTAGEREIHENFOLGE
1 2 3 .

BIJKOMENDE INFO VOORBEREIDING/VERWERKING -> ZIE HOOFDSTUK F 'VERWERKINGSVOORSCHRIFTEN' !
INFO COMPLEMENTAIRE PREPARATION/USINAGE -> VOIR CHAPITRE F 'PRESCRIPTIONS DE MISE EN OEUVRE' !
ADDITIONAL INFO PREPARATION/PROCESSING -> SEE CHAPTER F 'PROCESSING DATA' !
ZUSAETZLICHE INFO VORBEREITUNG/VERARBEITUNG -> SIEHE KAPITEL F 'VERARBEITUNGSVORSCHRIFTEN' !

BOTTOM SOLUTION BALCONY DOOR

BOTTOM SECTION BALCONY DOOR | 095.B132.00

MASTERLINE 8-Fu

OPTIE/OPTION 3

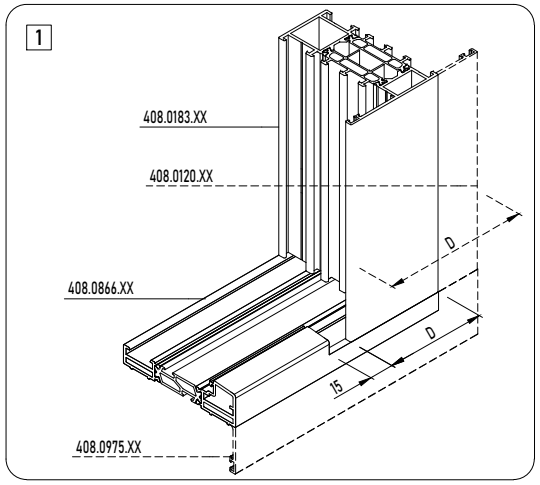

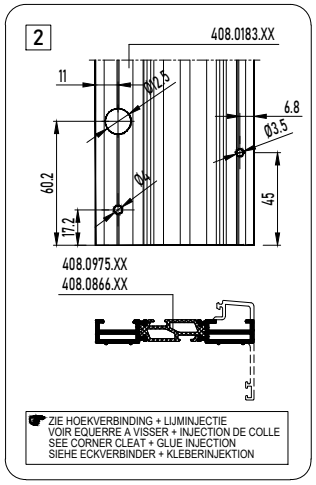

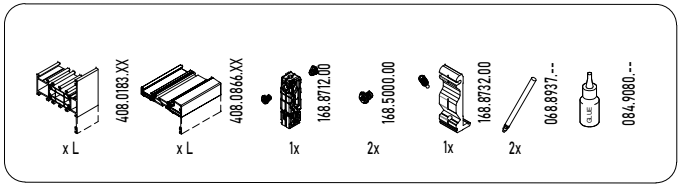

BUITENKADER DORMANT OUTER FRAME BLENDRAHMEN	1 FREZING 408.0866.XX FRAISAGE 408.0866.XX MILLING 408.0866.XX FRAESUNG 408.0866.XX	T-VERBINDER JONCTION-T T-BRACKET T-VERBINDER
408.0183.XX	D + 15	168.8712.00 + 168.8732.00
408.0160.XX	D + 15	168.8713.00 + 168.8733.00
408.0125.XX	D + 15	168.8714.00 + 168.8734.00

	-	
	095.E000.00 or 095.N300.00 or 095.B700.00 or 095.C300.00	1 2
	095.AKF6.00 095.B132.00	1
	095.B300.00	2

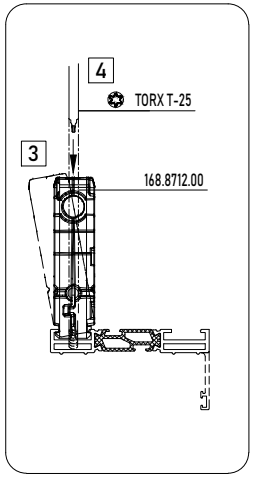

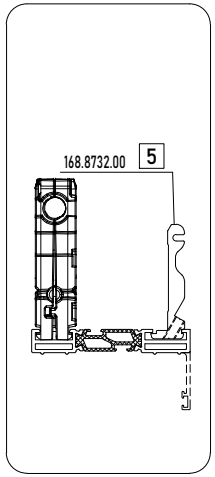

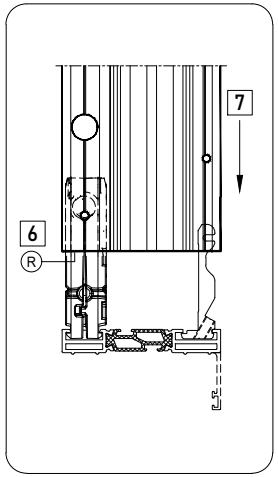

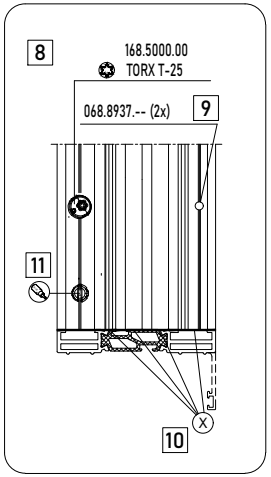

BOTTOM SOLUTION BALCONY DOOR

BOTTOM SECTION BALCONY DOOR

MASTERLINE 8-Fu

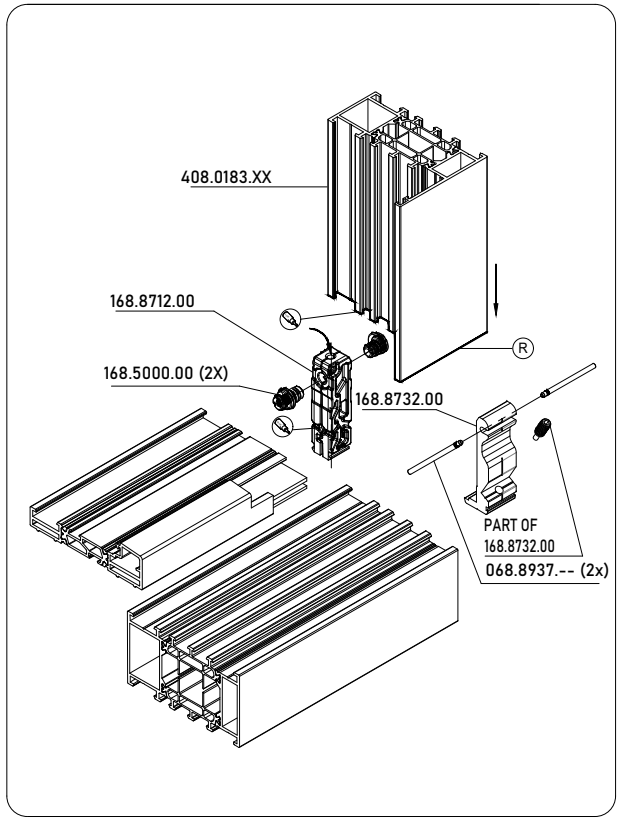

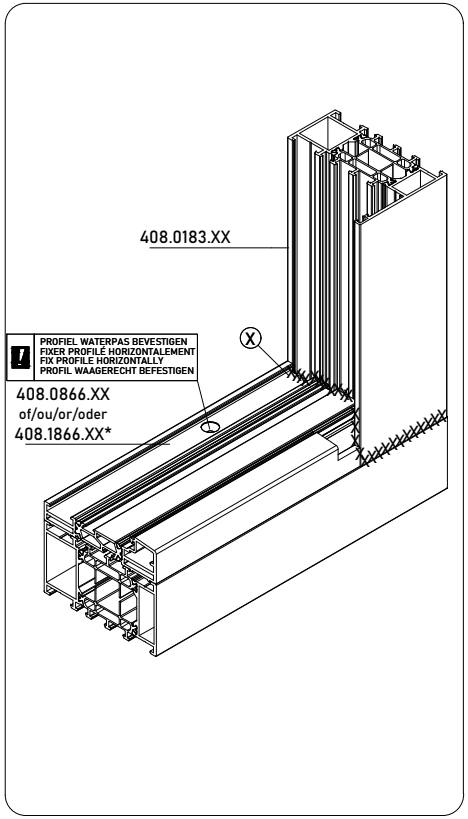

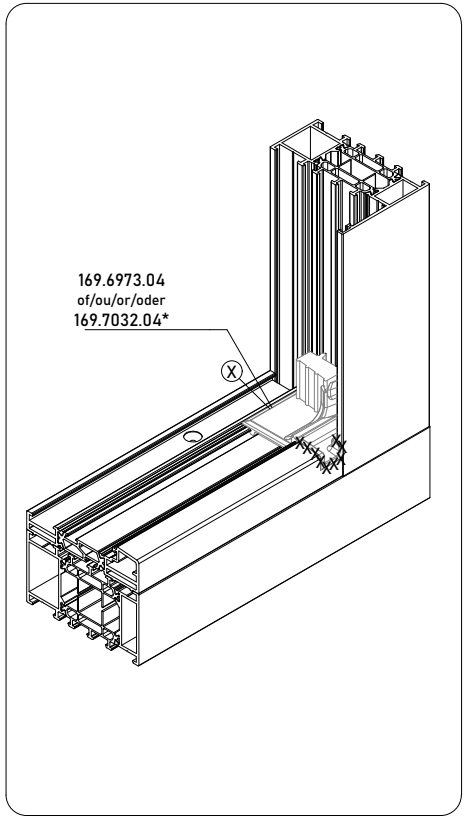

REYNASEAL DUO REYNASEAL DUO REYNASEAL DUO REYNASEAL DUO	REYNAPROTECTOR REYNAPROTECTOR REYNAPROTECTOR REYNAPROTECTOR	DICHTINGSMIDDEL MATIERE D'ETANCHEITE SEALING AGENT ABDICHTUNG

MONTAGEVOLGORDE
L 'ORDRE DE MONTAGE
THE ORDER OF ASSEMBLY
MONTAGEREIHENFOLGE
1 2 3 .

BIJKOMENDE INFO VOORBEREIDING/VERWERKING -> ZIE HOOFDSTUK F 'VERWERKINGSVOORSCHRIFTEN' !
INFO COMPLEMENTAIRE PREPARATION/USINAGE -> VOIR CHAPITRE F 'PRESCRIPTIONS DE MISE EN OEUVRE' !
ADDITIONAL INFO PREPARATION/PROCESSING -> SEE CHAPTER F 'PROCESSING DATA' !
ZUSAETZLICHE INFO VORBEREITUNG/VERARBEITUNG -> SIEHE KAPITEL F 'VERARBEITUNGSVORSCHRIFTEN' !

VOOR VERBORGEN BESLAG*
POUR LES ACCESSOIRES CACHÉS*
FOR CONCEALED HARDWARE*
FÜR VERDECKTE HARDWARE*

BOTTOM SOLUTION BALCONY DOOR

BOTTOM SECTION BALCONY DOOR

MASTERLINE 8-Fu

OPTIE/OPTION 1

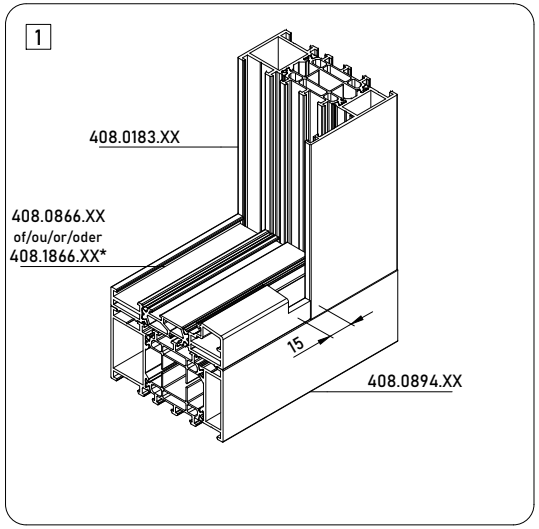

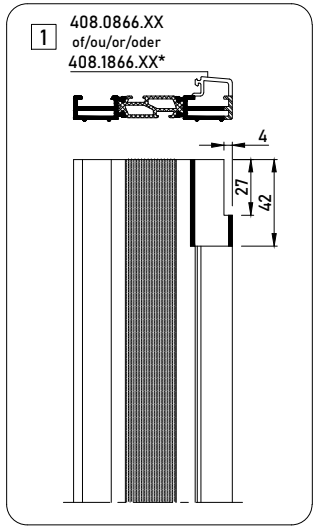

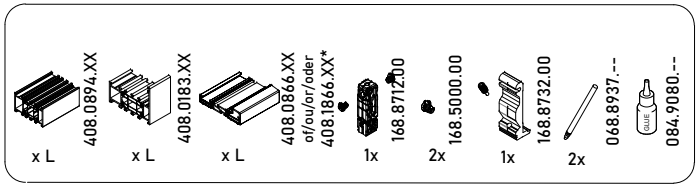

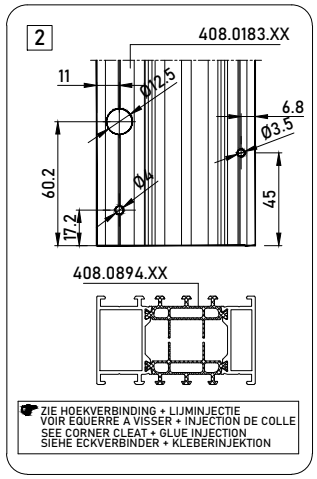

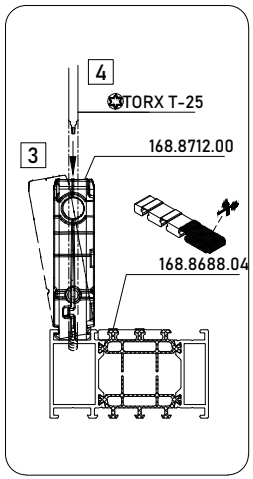

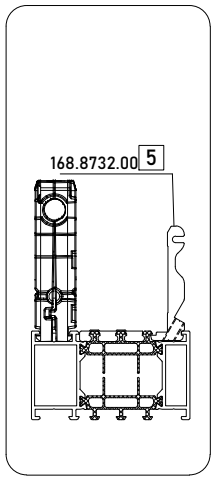

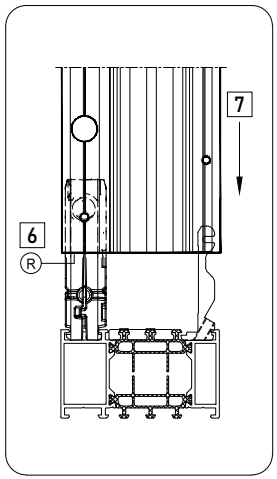

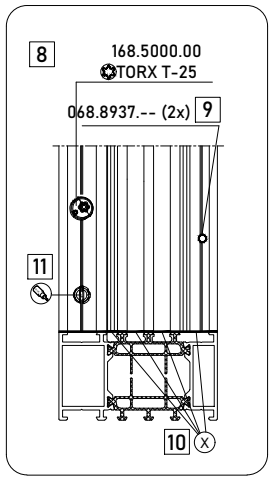

2

	-	
	095.E000.00 or 095.N300.00 or 095.B700.00 or 095.C300.00	1 2
	095.AKF6.00 095.B132.00	1
	095.B300.00	2

BOTTOM SOLUTION BALCONY DOOR

BOTTOM SECTION BALCONY DOOR

MASTERLINE 8-Fu

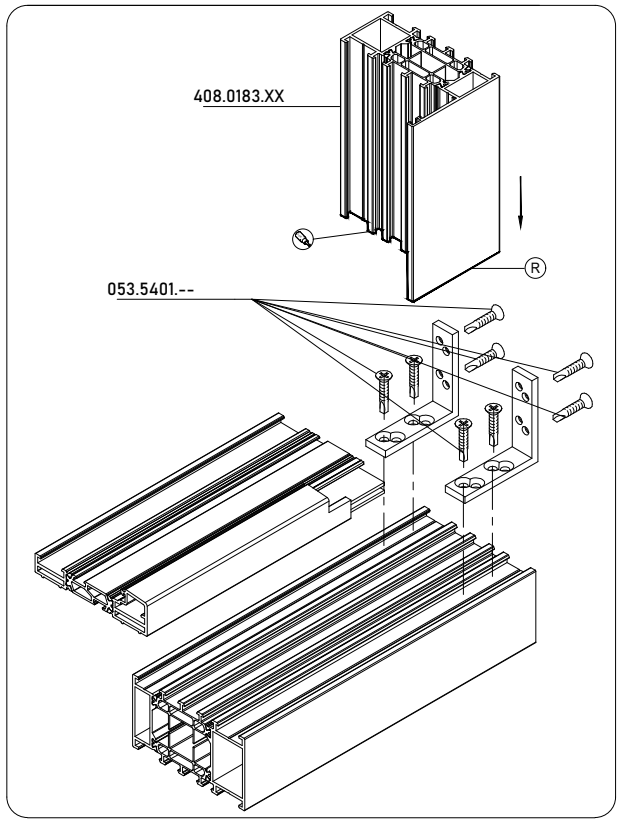

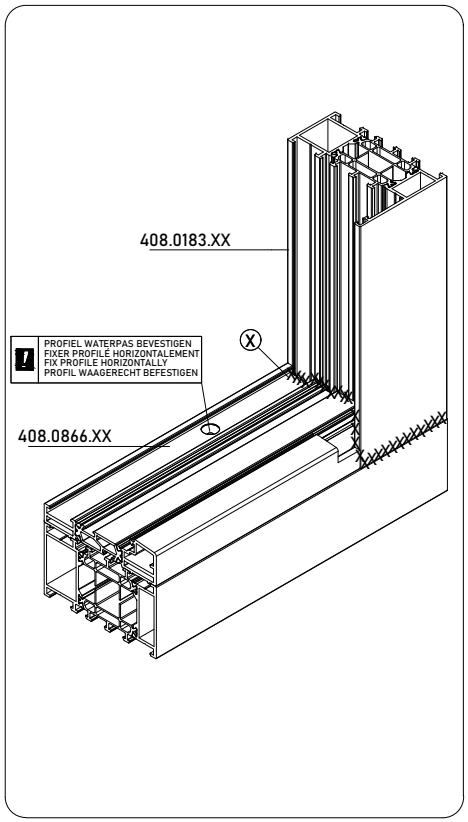

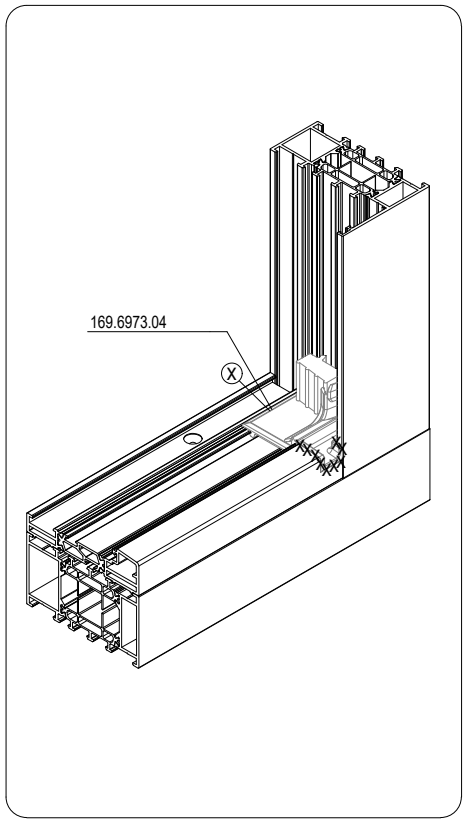

REYNASEAL DUO REYNASEAL DUO REYNASEAL DUO REYNASEAL DUO	R REYNAPROTECTOR REYNAPROTECTOR REYNAPROTECTOR REYNAPROTECTOR	X DICHTINGSMIDDEL MATIERE D'ETANCHEITE SEALING AGENT ABDICHTUNG

MONTAGEVOLGORDE
L 'ORDRE DE MONTAGE
THE ORDER OF ASSEMBLY
MONTAGEREIHENFOLGE
1 2 3 .

BIJKOMENDE INFO VOORBEREIDING/VERWERKING -> ZIE HOOFDSTUK F 'VERWERKINGSVOORSCHRIFTEN' !
INFO COMPLEMENTAIRE PREPARATION/USINAGE -> VOIR CHAPITRE F 'PRESCRIPTIONS DE MISE EN OEUVRE' !
ADDITIONAL INFO PREPARATION/PROCESSING -> SEE CHAPTER F 'PROCESSING DATA' !
ZUSAETZLICHE INFO VORBEREITUNG/VERARBEITUNG -> SIEHE KAPITEL F 'VERARBEITUNGSVORSCHRIFTEN' !

BOTTOM SOLUTION BALCONY DOOR

BOTTOM SECTION BALCONY DOOR

MASTERLINE 8-Fu

OPTIE/OPTION 2

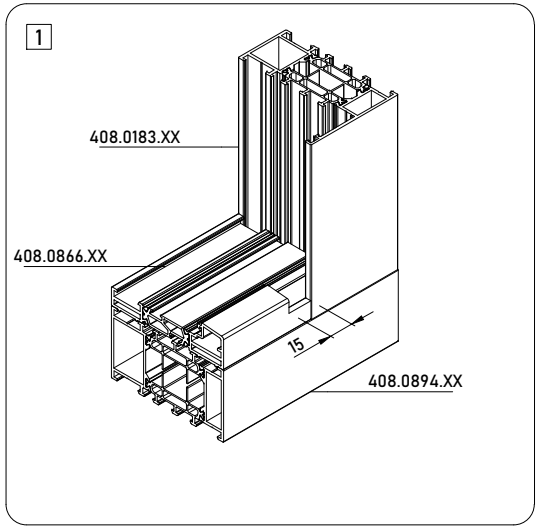

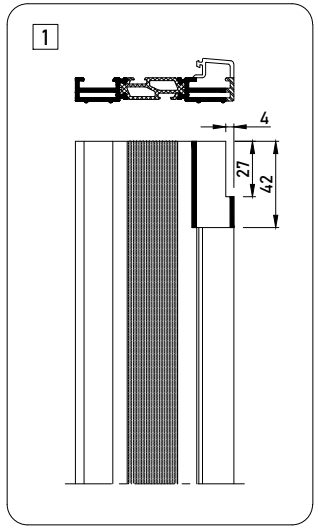

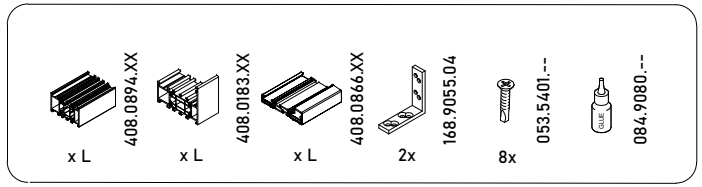

	-
	-
	095.E000.00 or 095.N300.00 or 095.B700.00 or 095.C300.00 [1]
	095.AKF6.00 [1]
	095.B132.00
	-

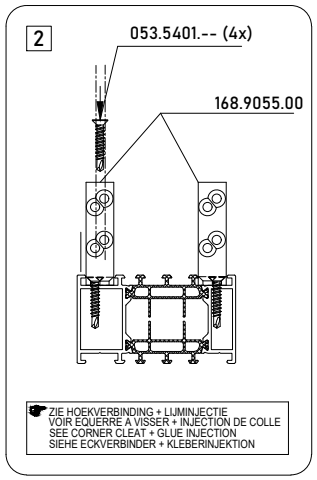

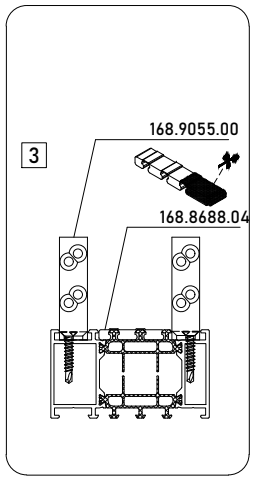

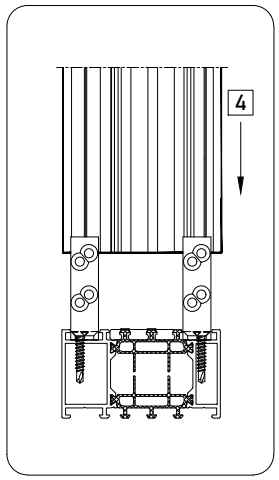

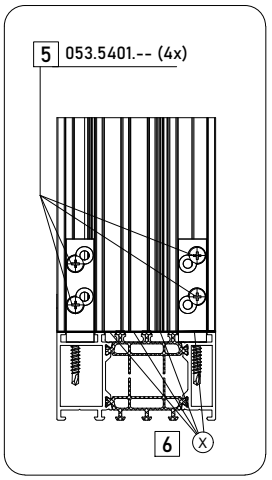

BOTTOM SOLUTION BALCONY DOOR

BOTTOM SECTION BALCONY DOOR

MASTERLINE 8-Fu

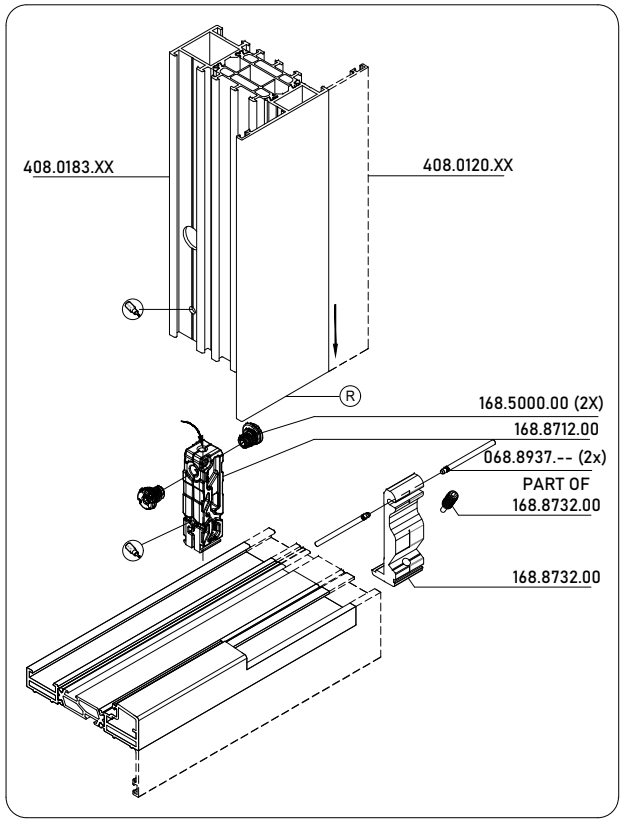

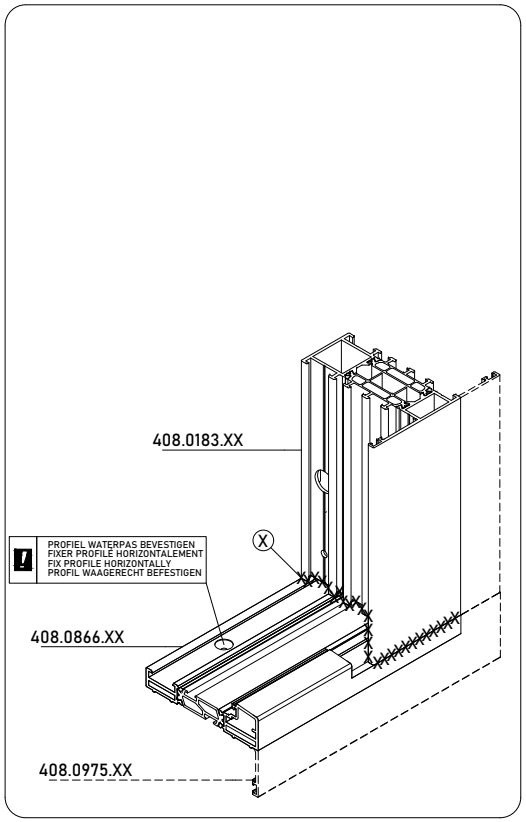

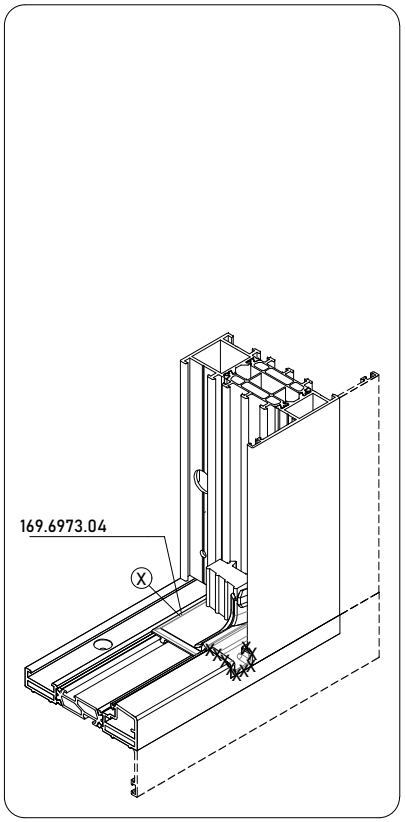

REYNASEAL DUO
REYNASEAL DUO
REYNASEAL DUO
REYNASEAL DUO

R REYNAPROTECTOR
REYNAPROTECTOR
REYNAPROTECTOR
REYNAPROTECTOR

X DICHTINGSMIDDEL
MATIERE D'ETANCHEITE
SEALING AGENT
ABDICHTUNG

MONTAGEVOLGORDE
L 'ORDRE DE MONTAGE
THE ORDER OF ASSEMBLY
MONTAGEREIHENFOLGE
1 2 3 .

BIJKOMENDE INFO VOORBEREIDING/VERWERKING -> ZIE HOOFDSTUK F 'VERWERKINGSVOORSCHRIFTEN' !
INFO COMPLEMENTAIRE PREPARATION/USINAGE -> VOIR CHAPITRE F 'PRESCRIPTIONS DE MISE EN OEUVRE' !
ADDITIONAL INFO PREPARATION/PROCESSING -> SEE CHAPTER F 'PROCESSING DATA' !
ZUSAETZLICHE INFO VORBEREITUNG/VERARBEITUNG -> SIEHE KAPITEL F 'VERARBEITUNGSVORSCHRIFTEN' !

BOTTOM SOLUTION BALCONY DOOR

BOTTOM SECTION BALCONY DOOR

MASTERLINE 8-Fu

OPTIE/OPTION 3

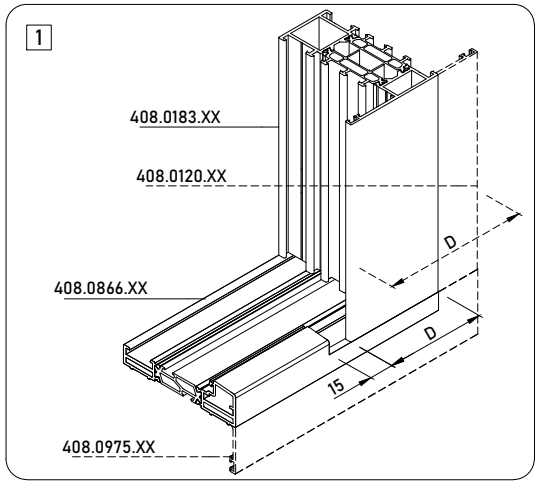

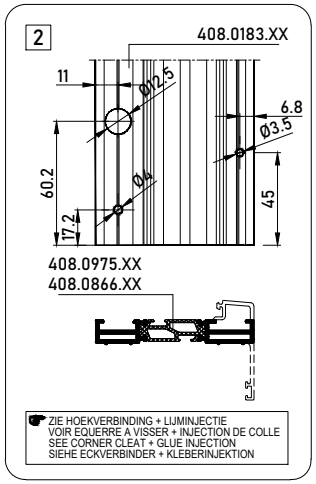

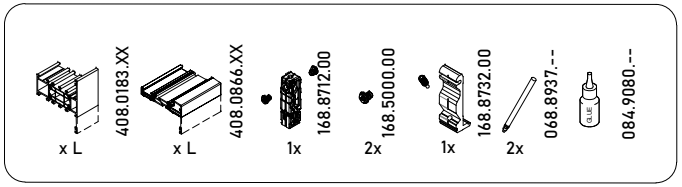

BUITENKADER DORMANT OUTER FRAME BLENDRAHMEN	1 FREZING 408.0866.XX FRAISAGE 408.0866.XX MILLING 408.0866.XX FRAESUNG 408.0866.XX	T-VERBINDER JONCTION-T T-BRACKET T-VERBINDER
408.0183.XX	D + 15	168.8712.00 + 168.8732.00
408.0160.XX	D + 15	168.8713.00 + 168.8733.00
408.0125.XX	D + 15	168.8714.00 + 168.8734.00

	-	
	095.E000.00 or 095.N300.00 or 095.B700.00 or 095.C300.00	1 2
	095.AKF6.00 095.B132.00	1
	095.B300.00	2

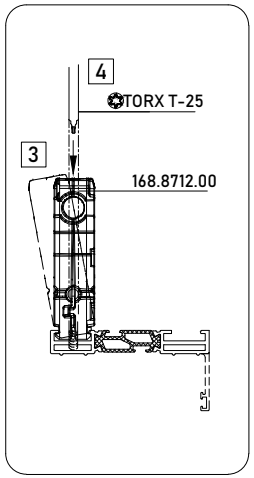

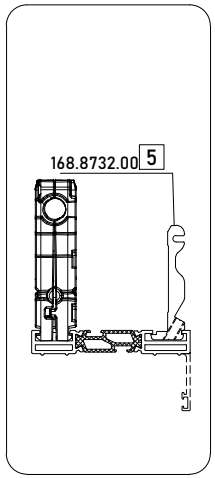

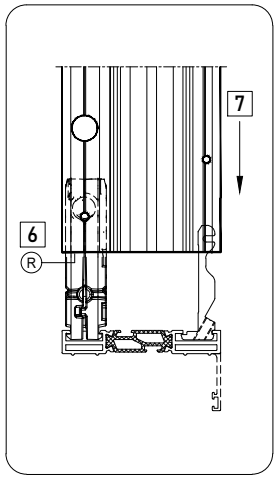

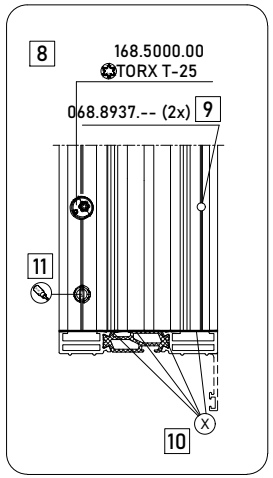

BOTTOM SOLUTION BALCONY DOOR

BOTTOM SECTION BALCONY DOOR - HIDDEN VENT

MASTERLINE 8-Fu

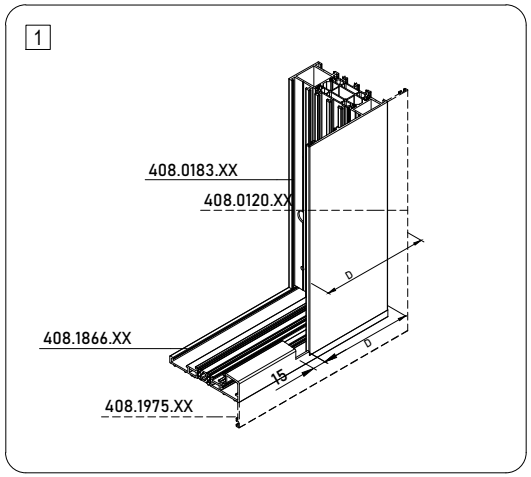

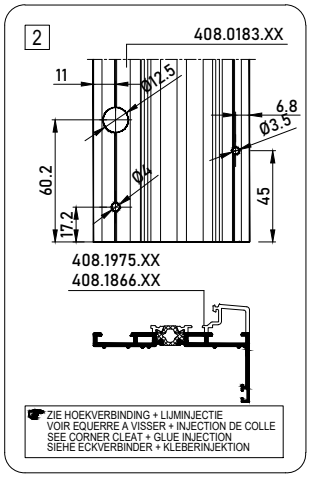

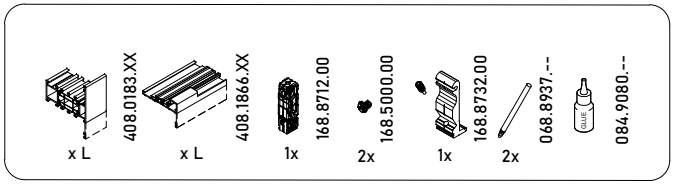

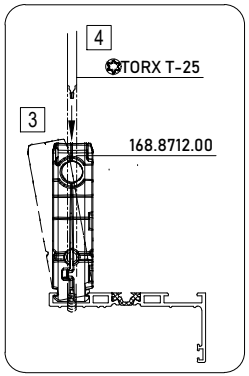

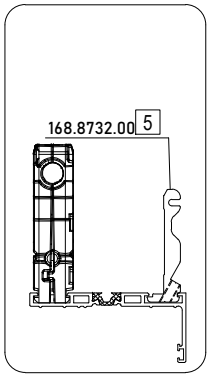

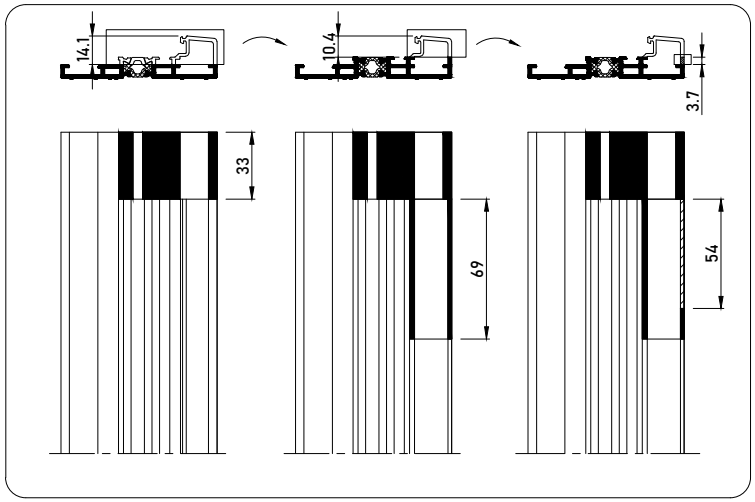

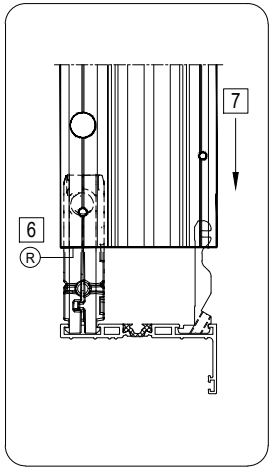

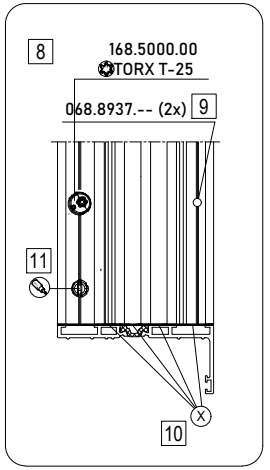

BOTTOM SOLUTION BALCONY DOOR

BOTTOM SECTION BALCONY DOOR - HIDDEN VENT

MASTERLINE 8-Fu

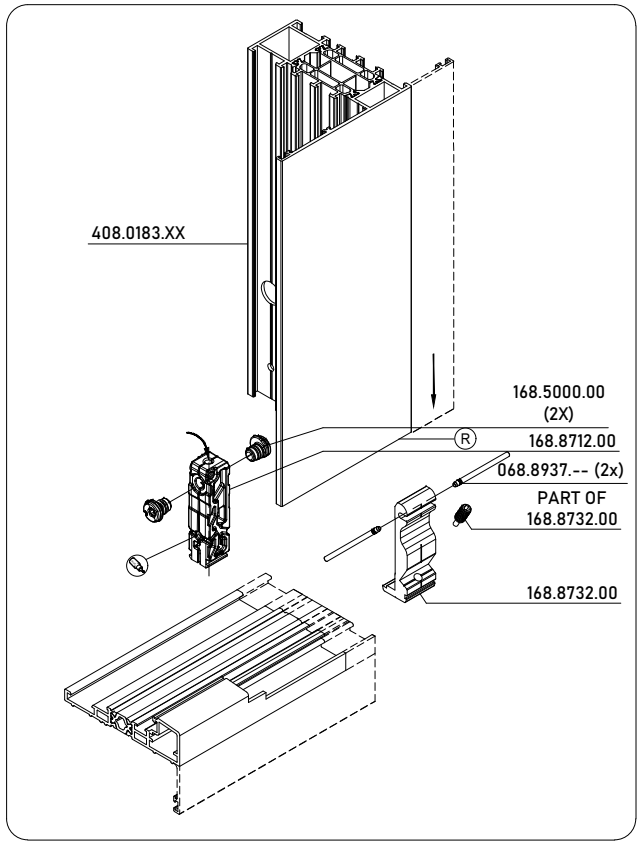

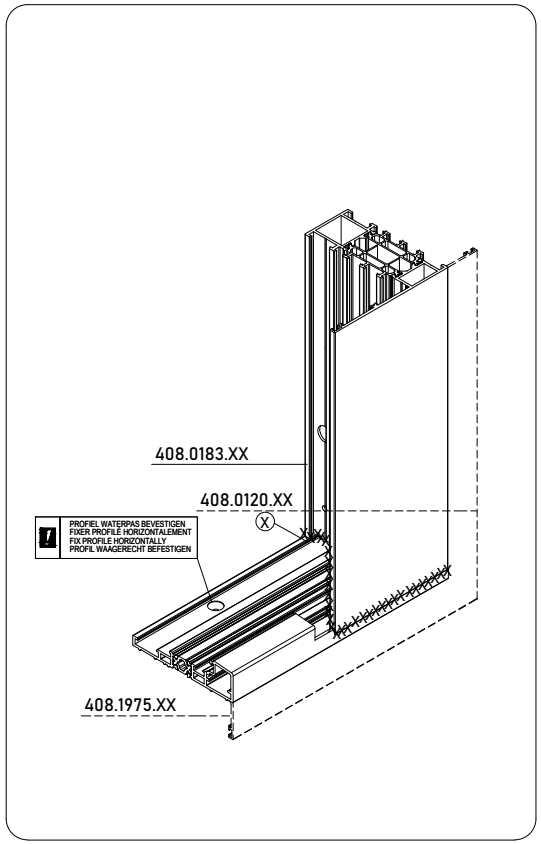

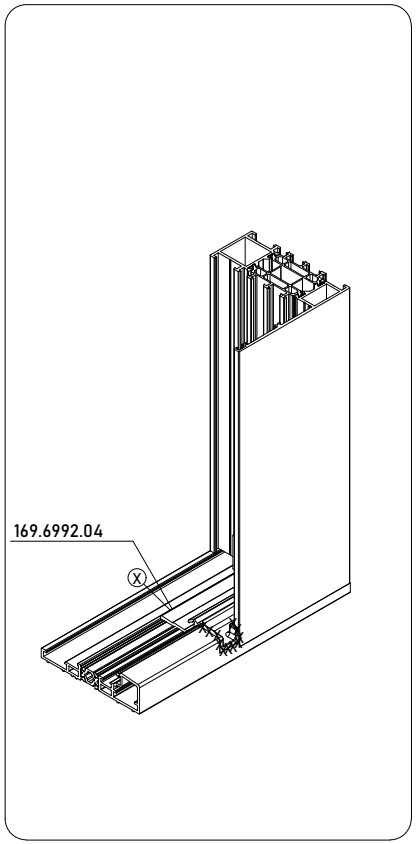

REYNASEAL DUO REYNASEAL DUO REYNASEAL DUO REYNASEAL DUO	R REYNAPROTECTOR REYNAPROTECTOR REYNAPROTECTOR REYNAPROTECTOR	X DICHTINGSMIDDEL MATIERE D'ETANCHEITE SEALING AGENT ABDICHTUNG

MONTAGEVOLGORDE
L 'ORDRE DE MONTAGE
THE ORDER OF ASSEMBLY
MONTAGEREIHENFOLGE
1 2 3 .

BIJKOMENDE INFO VOORBEREIDING/VERWERKING -> ZIE HOOFDSTUK F 'VERWERKINGSVOORSCHRIFTEN' !
INFO COMPLEMENTAIRE PREPARATION/USINAGE -> VOIR CHAPITRE F 'PRESCRIPTIONS DE MISE EN OEUVRE' !
ADDITIONAL INFO PREPARATION/PROCESSING -> SEE CHAPTER F 'PROCESSING DATA' !
ZUSAETZLICHE INFO VORBEREITUNG/VERARBEITUNG -> SIEHE KAPITEL F 'VERARBEITUNGSVORSCHRIFTEN' !

ASSEMBLY END PIECE BALCONY DOOR

ASSEMBLY END PIECES

MASTERLINE 8-Fu

PLAATSING EINDSTUKKEN
FINITION PIECES FINALES
SEALING END PIECES
MONTAGE ENDKAPPEN

169.6973.04 (6973) en/et/and/und 169.8380.04 (8380)
+
169.6871.04 (6871) of/ou/or/oder 169.6874.04 (6874)

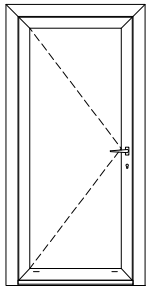

6973
8380

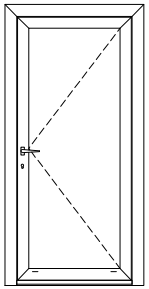

6973
8380

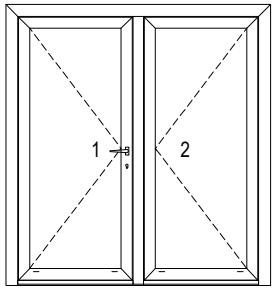

6973
8380
6871

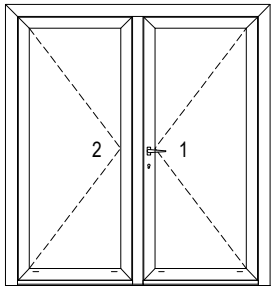

6973
8380
6874

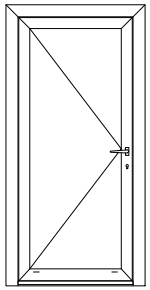

6973
8380

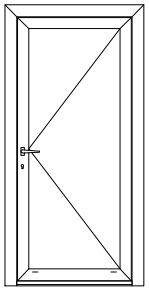

6973
8380

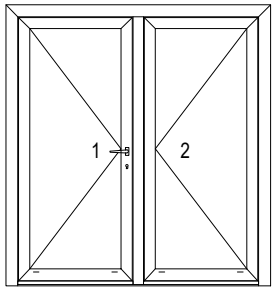

6973
8380
6874

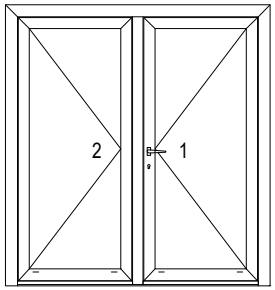

6973
8380
6871

ASSEMBLY COMBINED FRAME BALCONY DOOR

ASSEMBLY COMBINED FRAME - BALCONY DOOR

MASTERLINE 8-Fu



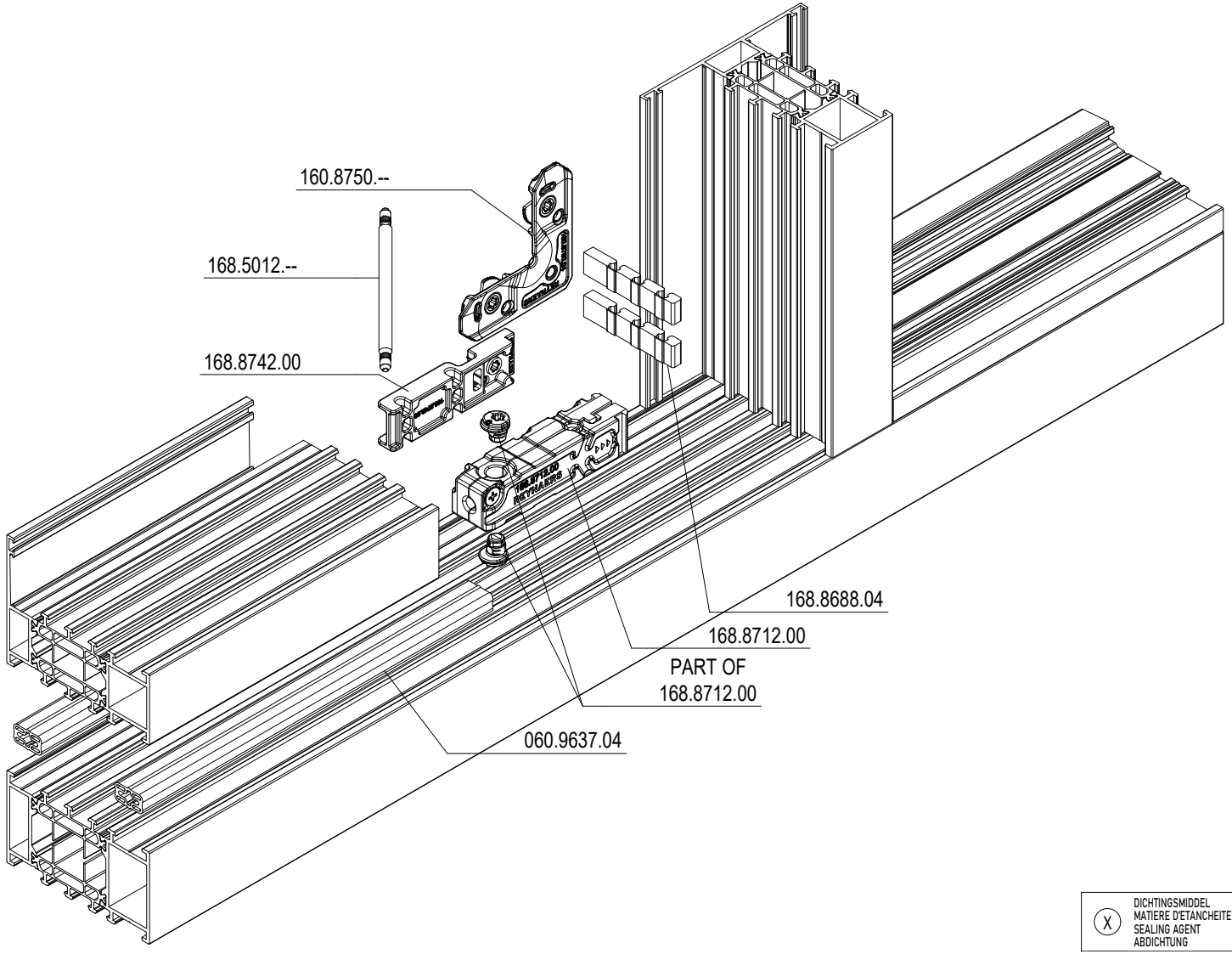

ASSEMBLY COMBINED FRAME BALCONY DOOR

ASSEMBLY COMBINED FRAME - BALCONY DOOR

MASTERLINE 8-Fu



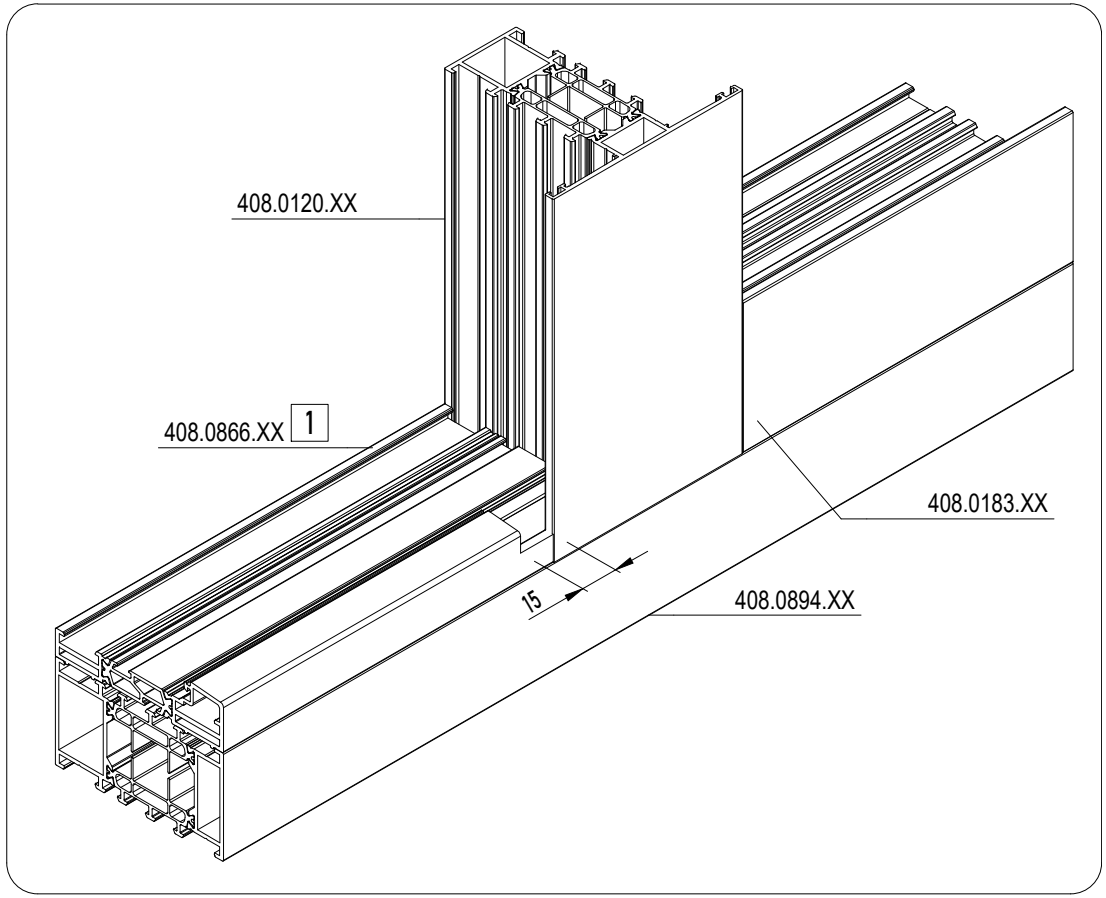

X DICHTINGSMIDDEL
MATIERE D'ETANCHEITE
SEALING AGENT
ABDICHTUNG

ASSEMBLY COMBINED FRAME BALCONY DOOR

ASSEMBLY COMBINED FRAME - BALCONY DOOR

MASTERLINE 8-Fu



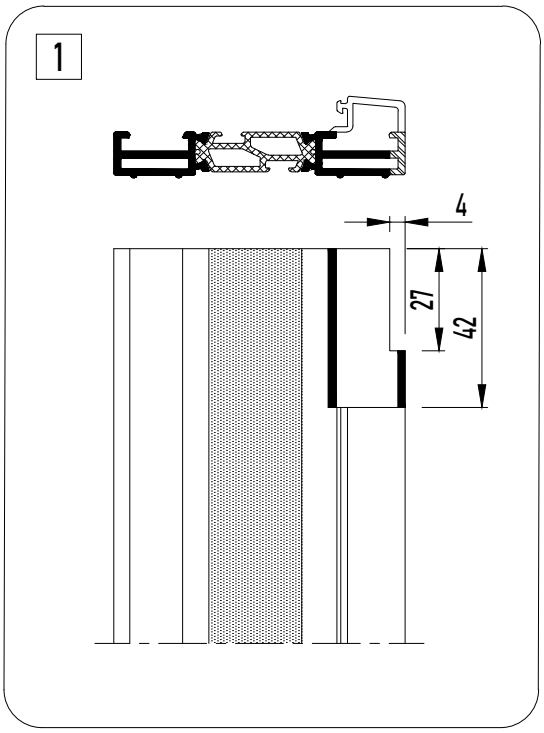

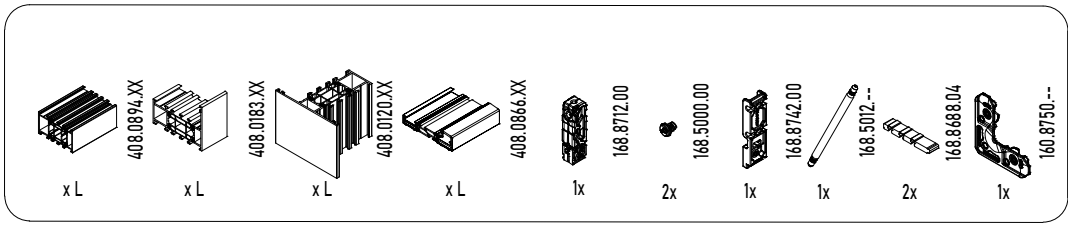

ASSEMBLY COMBINED FRAME BALCONY DOOR

ASSEMBLY COMBINED FRAME - BALCONY DOOR

MASTERLINE 8-Fu



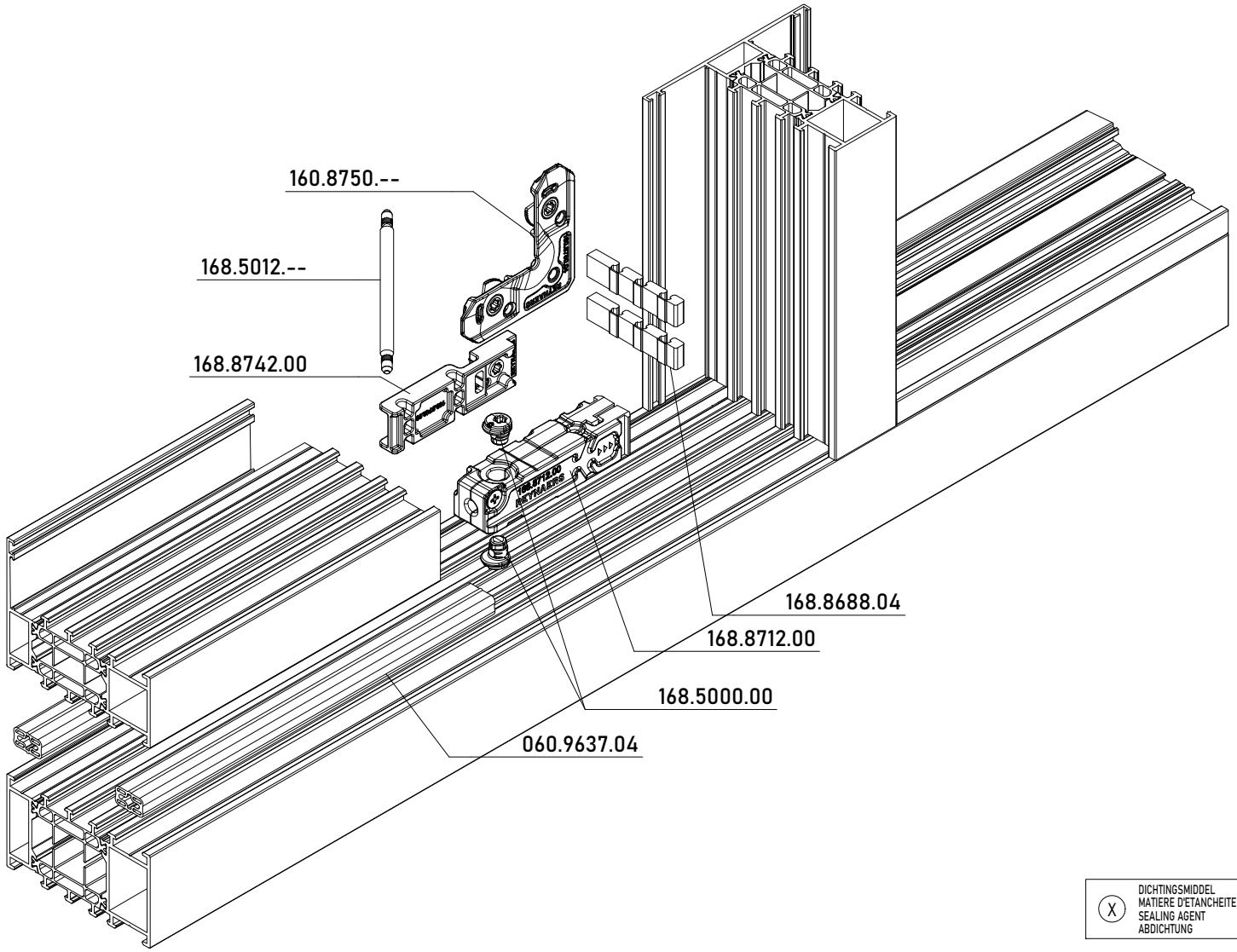

X DICHTINGSMIDDEL
MATIERE D'ETANCHEITE
SEALING AGENT
ABDICHTUNG

ASSEMBLY COMBINED FRAME BALCONY DOOR

ASSEMBLY COMBINED FRAME - BALCONY DOOR

MASTERLINE 8-Fu

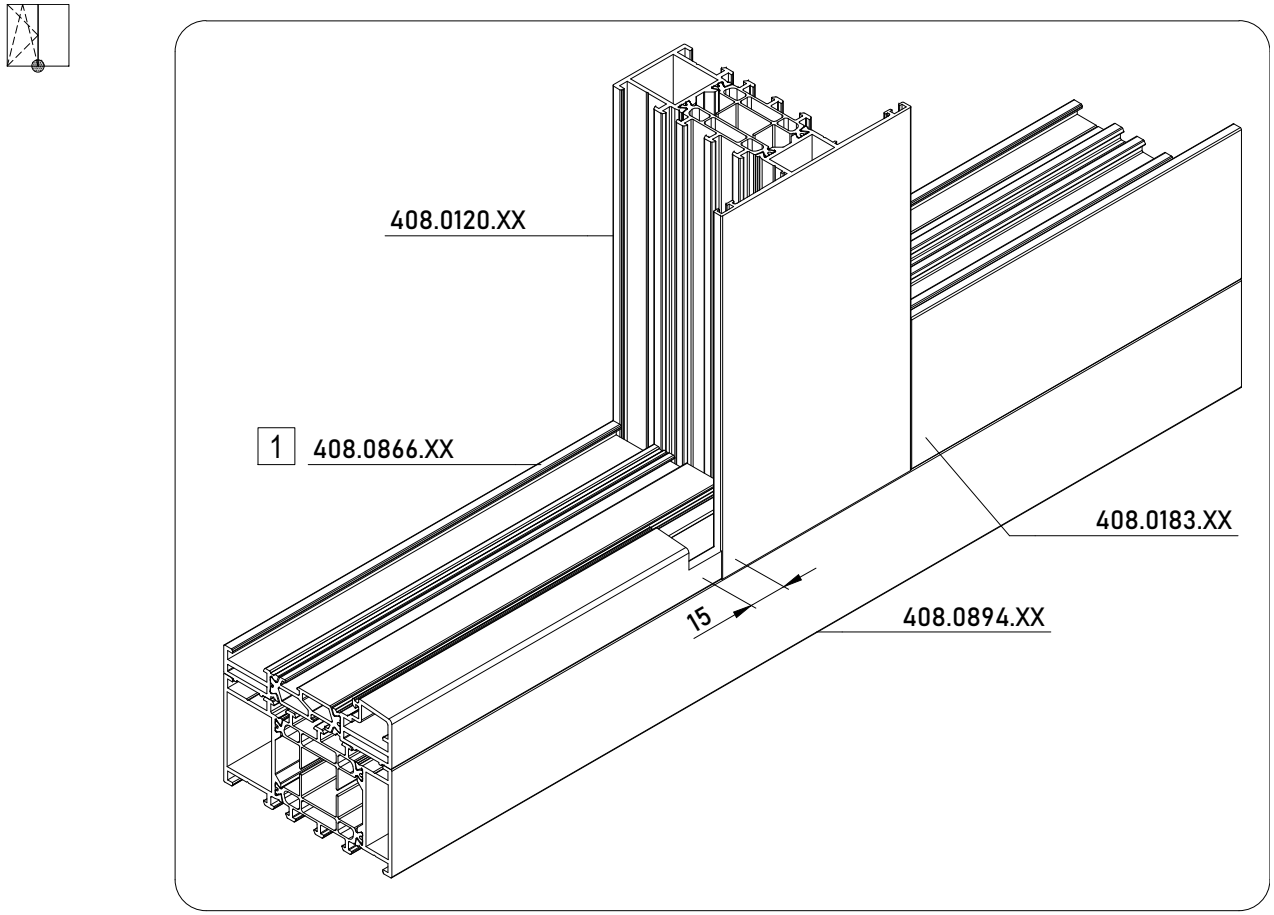

X DICHTINGSMIDDEL
MATIERE D'ETANCHEITE
SEALING AGENT
ABDICHTUNG

ASSEMBLY COMBINED FRAME BALCONY DOOR

ASSEMBLY COMBINED FRAME - BALCONY DOOR

MASTERLINE 8-Fu

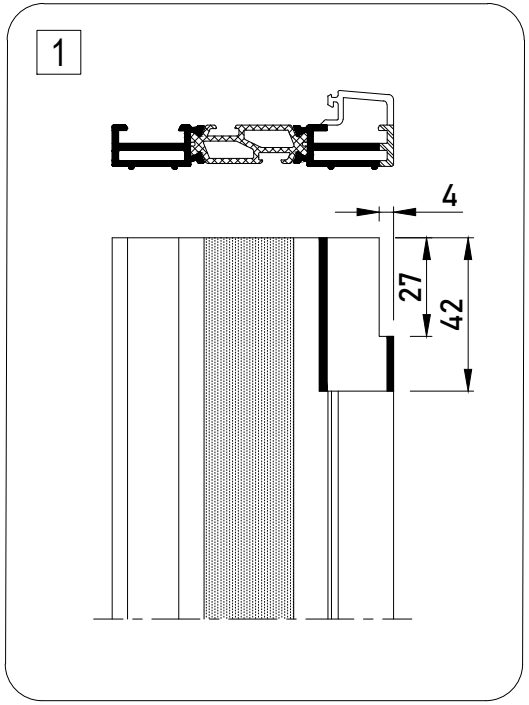

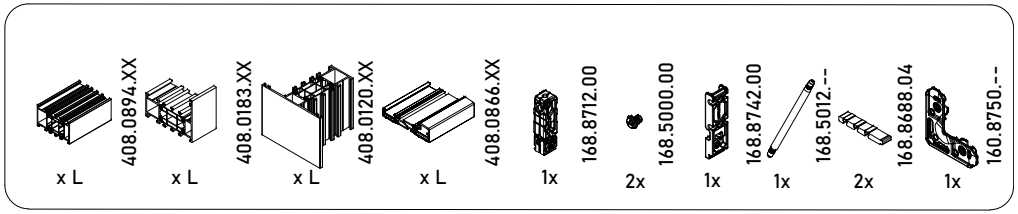

ASSEMBLY COMBINED FRAME BALCONY DOOR

ASSEMBLY COMBINED FRAME - BALCONY DOOR

MASTERLINE 8-Fu

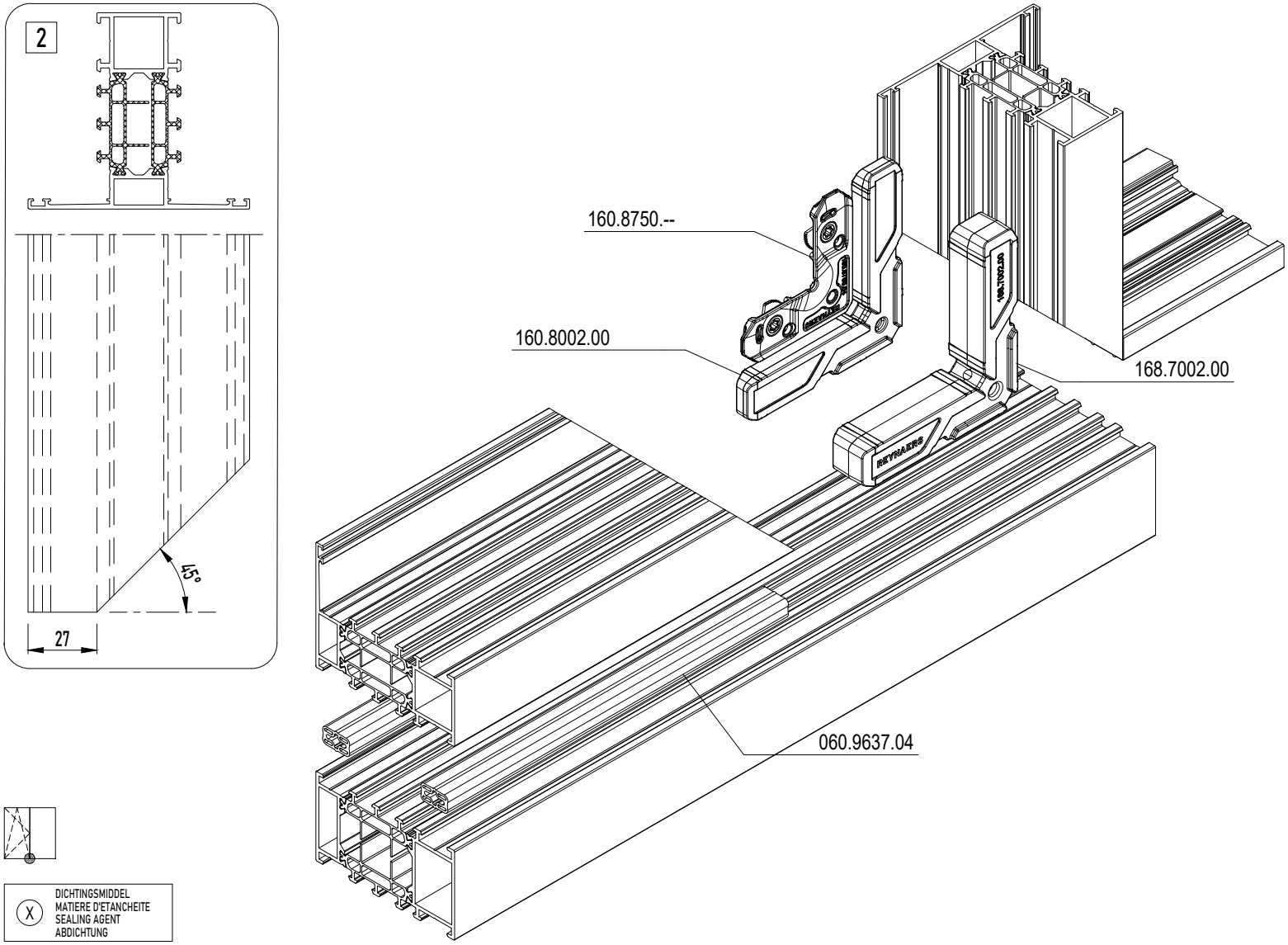

ASSEMBLY COMBINED FRAME BALCONY DOOR

ASSEMBLY COMBINED FRAME - BALCONY DOOR

MASTERLINE 8-Fu

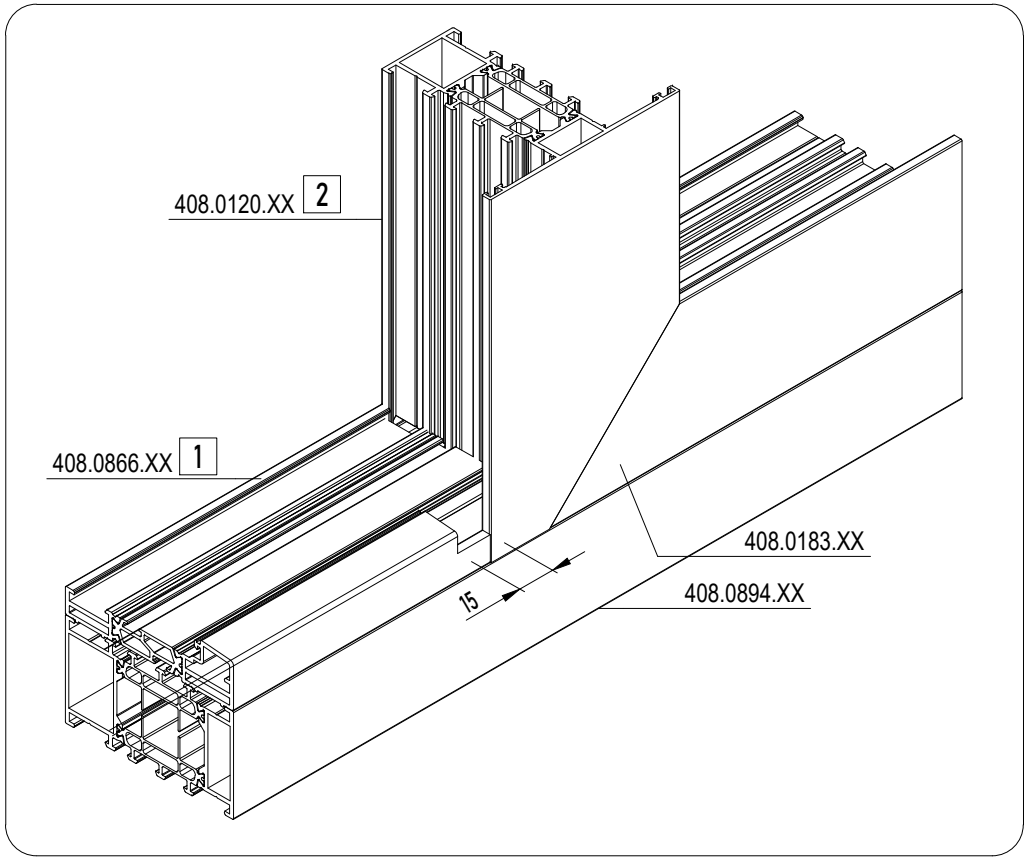

X	DICHTINGSMIDDEL MATIERE D'ETANCHEITE SEALING AGENT ABDICHTUNG

	- -
	095.C300.00 or 095.E000.00 or 095.E010.00
	095.AKF6.00 095.B132.00
	-

ASSEMBLY COMBINED FRAME BALCONY DOOR

ASSEMBLY COMBINED FRAME - BALCONY DOOR

MASTERLINE 8-Fu

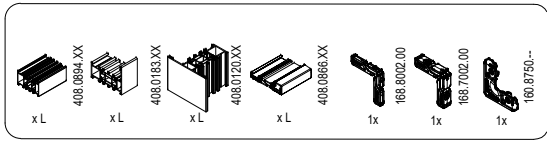

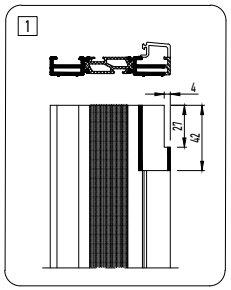

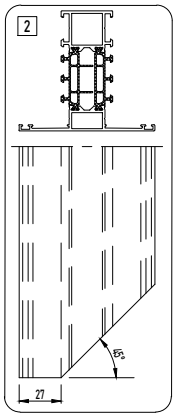

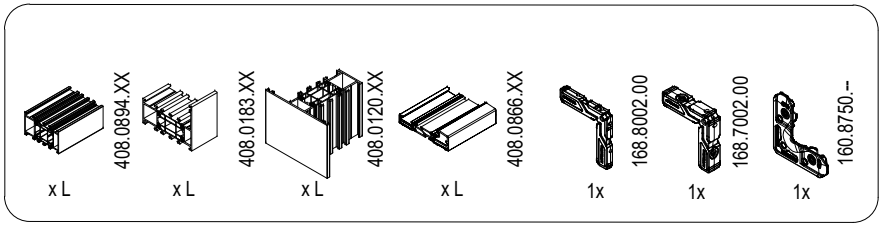

ASSEMBLY COMBINED FRAME BALCONY DOOR

ASSEMBLY COMBINED FRAME - BALCONY DOOR

MASTERLINE 8-Fu

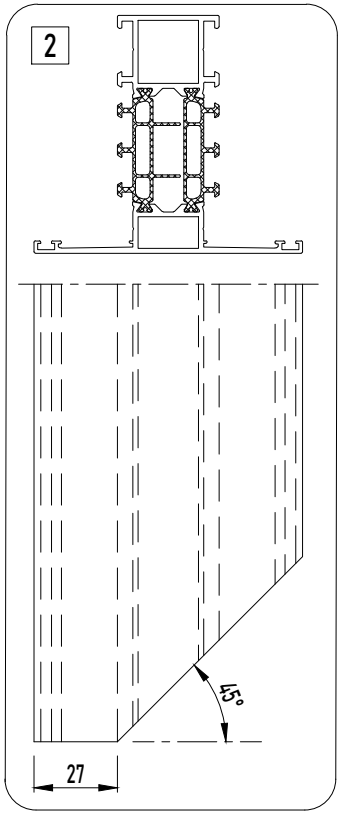

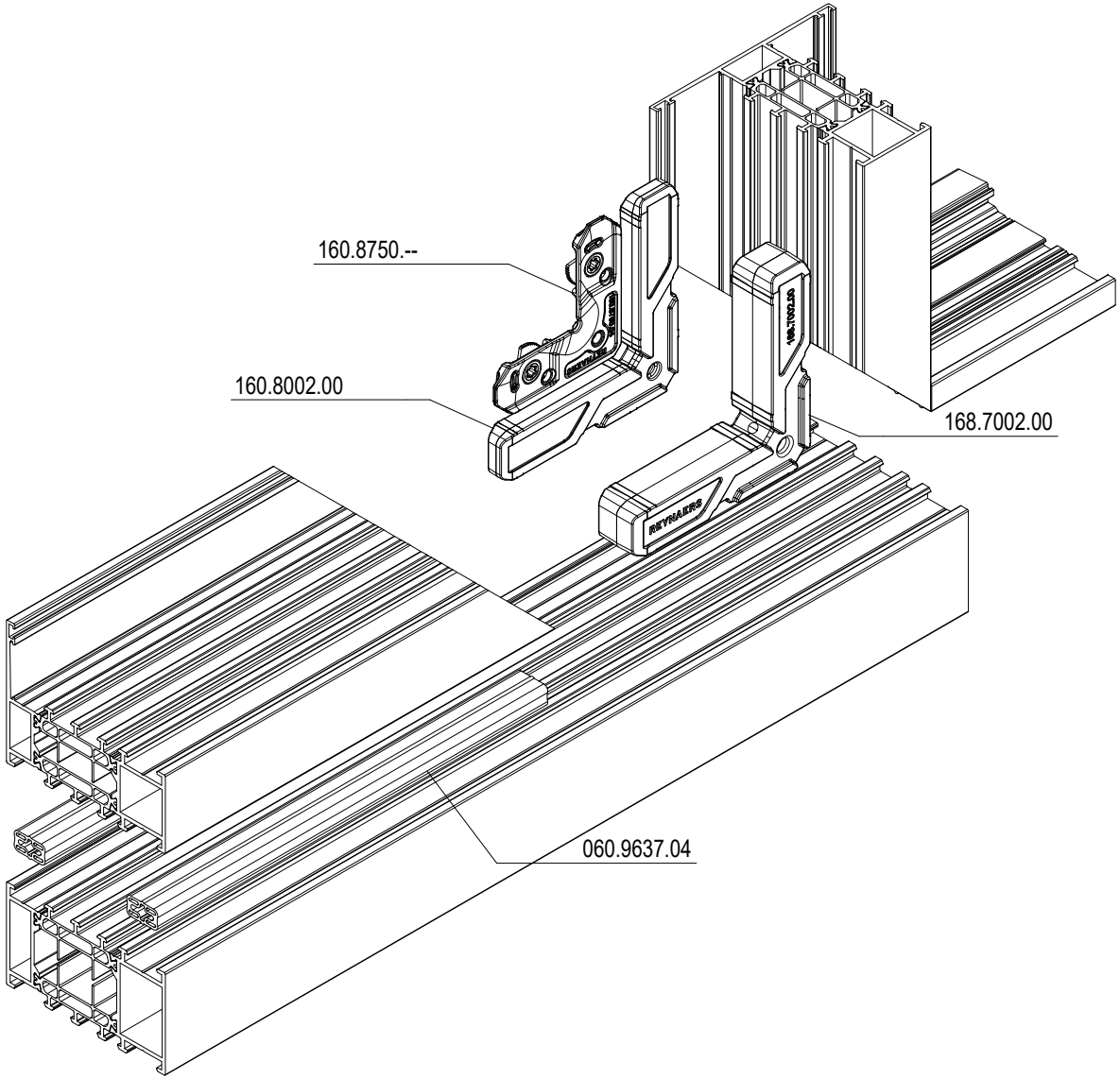



X DICHTINGSMIDDEL
MATIERE D'ETANCHEITE
SEALING AGENT
ABDICHTUNG

ASSEMBLY COMBINED FRAME BALCONY DOOR

ASSEMBLY COMBINED FRAME - BALCONY DOOR

MASTERLINE 8-Fu

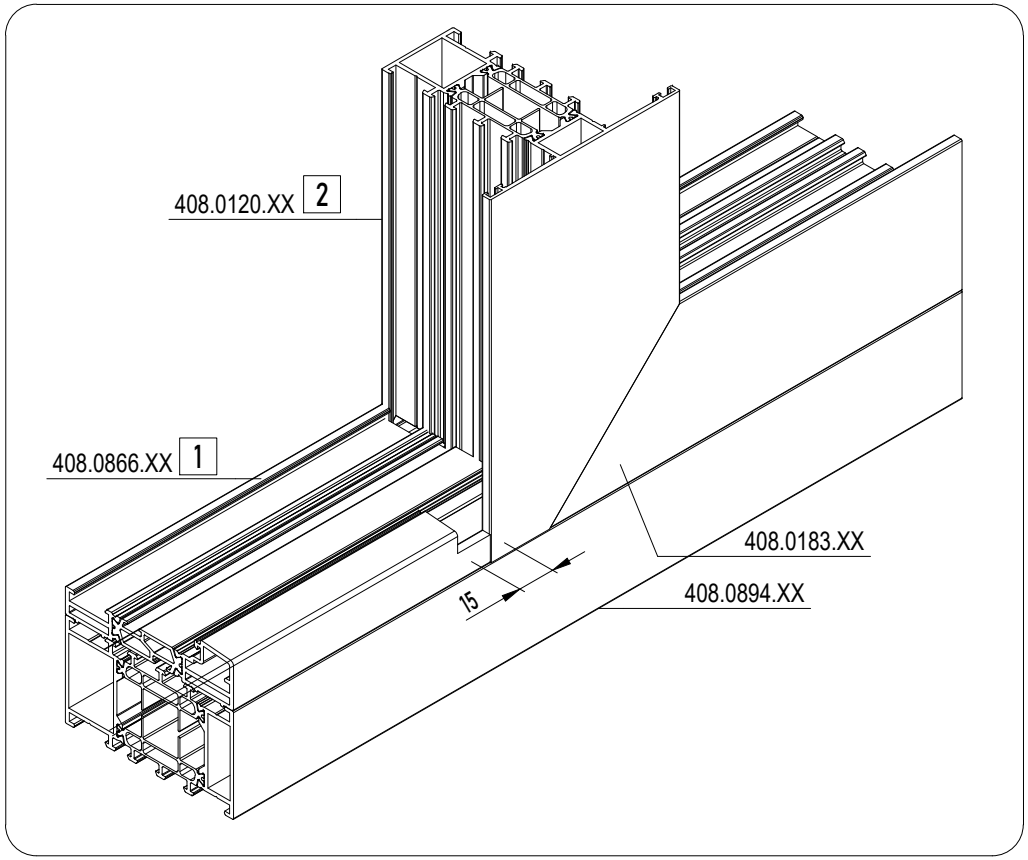

X	DICHTINGSMIDDEL MATIERE D'ETANCHEITE SEALING AGENT ABDICHTUNG

	-
	-
	095.C300.00 or 095.E000.00 or 095.E010.00
	095.AKF6.00 095.B132.00
	-

ASSEMBLY COMBINED FRAME BALCONY DOOR

ASSEMBLY COMBINED FRAME - BALCONY DOOR

MASTERLINE 8-Fu

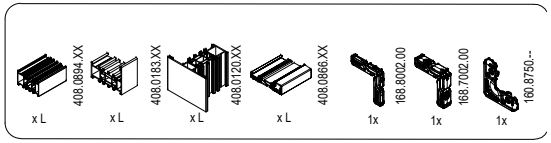

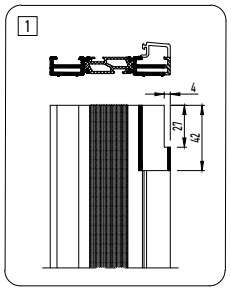

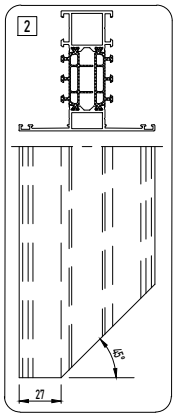

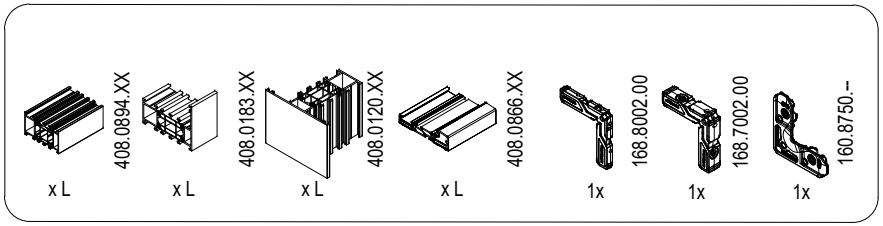

ASSEMBLY COMBINED FRAME BALCONY DOOR

ASSEMBLY COMBINED FRAME - BALCONY DOOR - VARIANT

MASTERLINE 8-Fu

2	
	-
	095.C300.00 or 095.E000.00 or 095.E010.00
	095.D300.00
	-

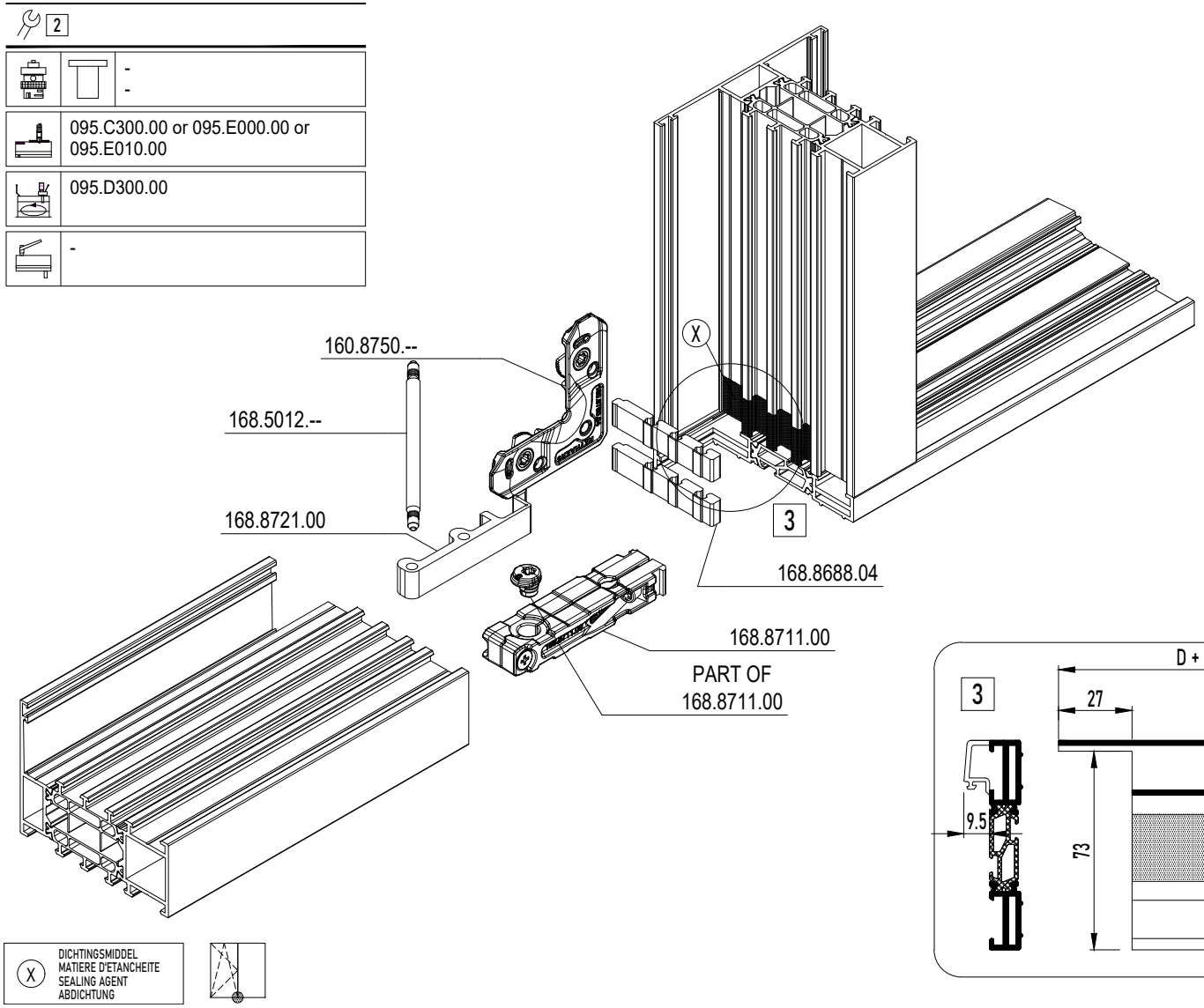

ASSEMBLY COMBINED FRAME BALCONY DOOR

ASSEMBLY COMBINED FRAME - BALCONY DOOR - VARIANT

MASTERLINE 8-Fu

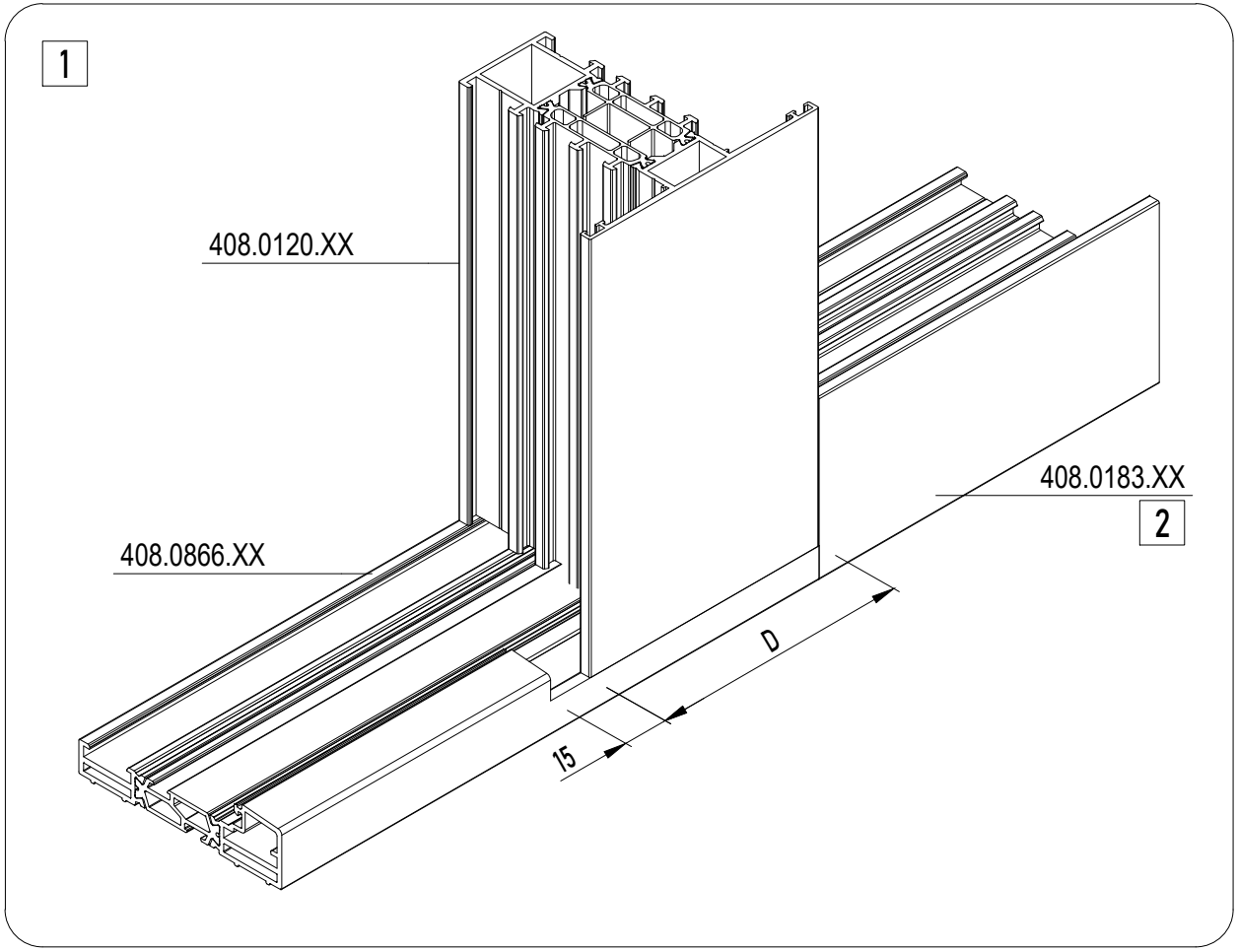

X DICHTINGSMIDDEL
MATIERE D'ETANCHEITE
SEALING AGENT
ABDICHTUNG



ASSEMBLY COMBINED FRAME BALCONY DOOR

ASSEMBLY COMBINED FRAME - BALCONY DOOR - VARIANT

MASTERLINE 8-Fu

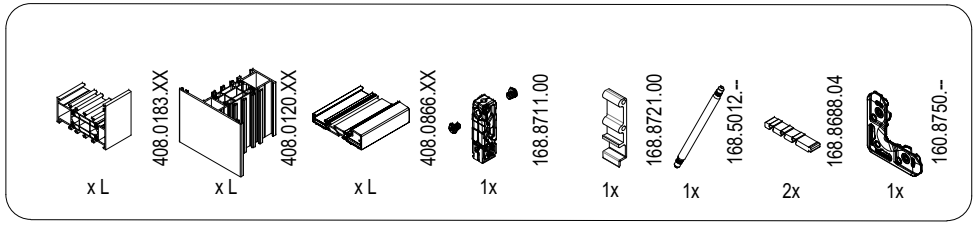

2 BUITENKADER DORMANT OUTER FRAME BLENDRAHMEN	1 FREZING 408.0866.XX FRAISAGE 408.0866.XX MILLING 408.0866.XX FRAESUNG 408.0866.XX	T-VERBINDER JONCTION-T T-BRACKET T-VERBINDER
408.0183.XX	D + 15	168.8711.00 168.8721.00
408.0160.XX	D + 15	168.8712.00 168.8742.00
408.0125.XX	D + 15	168.8713.00 168.8743.00

ASSEMBLY COMBINED FRAME BALCONY DOOR

ASSEMBLY COMBINED FRAME - BALCONY DOOR

MASTERLINE 8-Fu

2	
-	-
095.C300.00 or 095.E000.00 or 095.E010.00	
095.D300.00	
-	

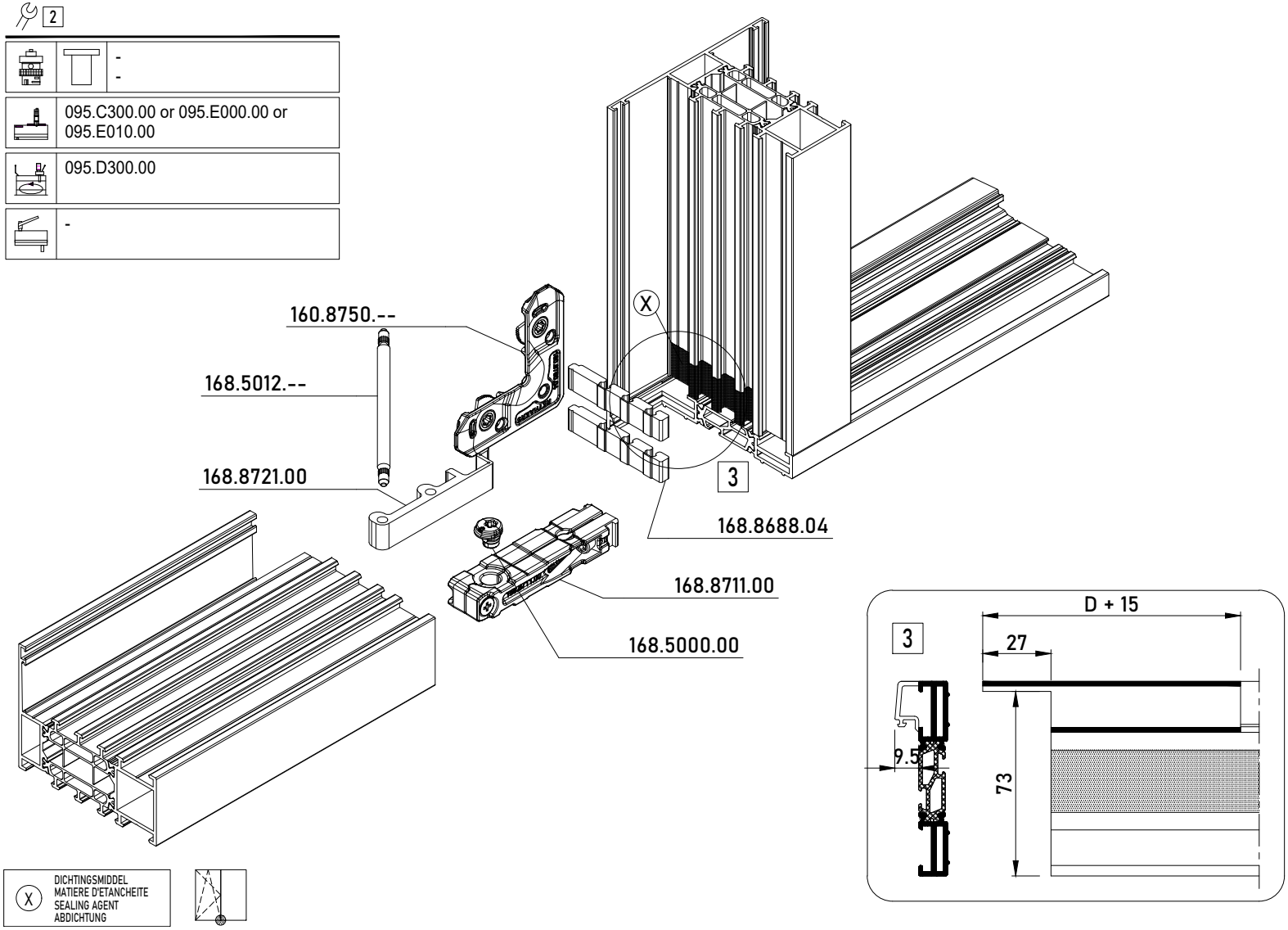

ASSEMBLY COMBINED FRAME BALCONY DOOR

ASSEMBLY COMBINED FRAME - BALCONY DOOR

MASTERLINE 8-Fu

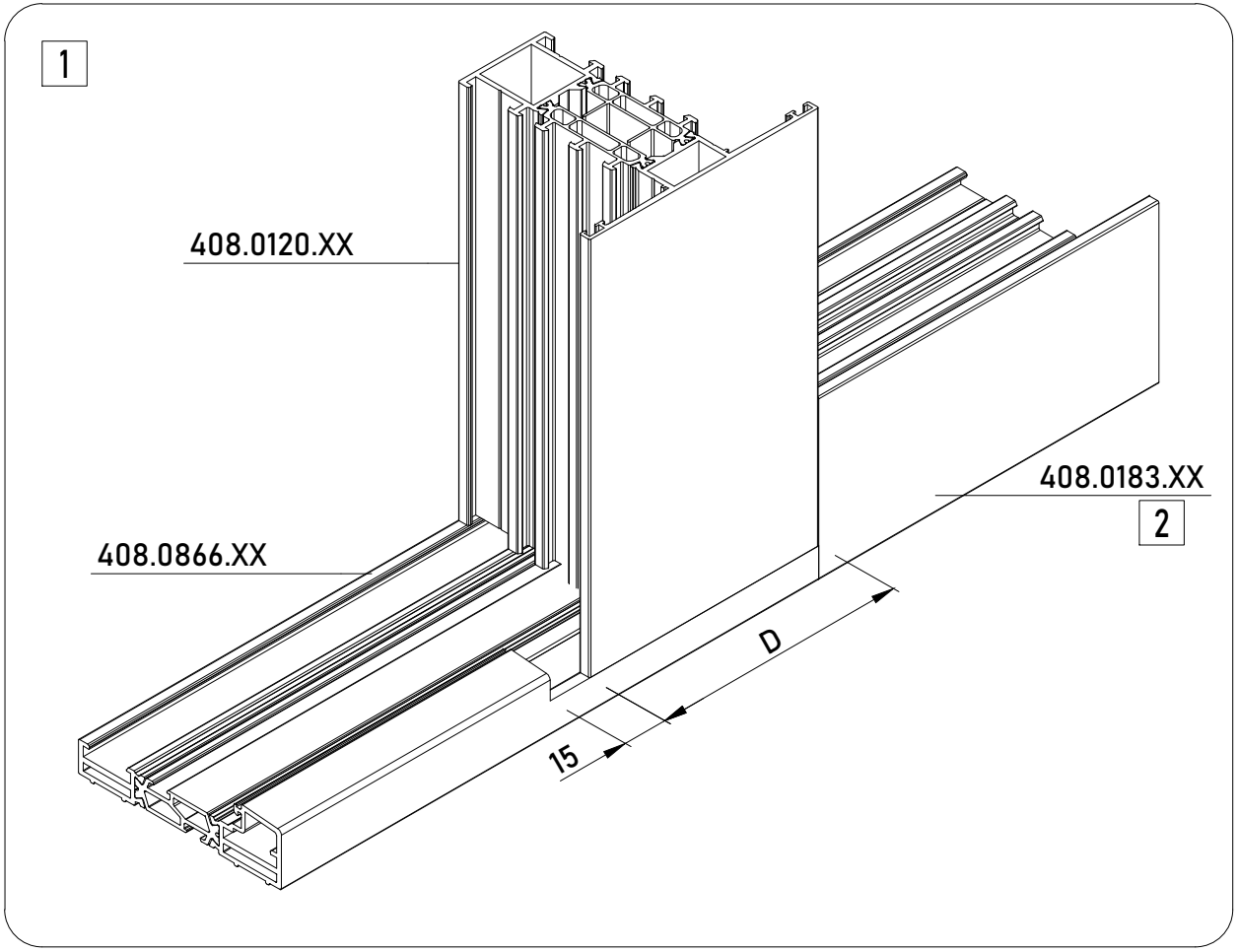

X DICHTINGSMIDDEL
MATIERE D'ETANCHEITE
SEALING AGENT
ABDICHTUNG



ASSEMBLY COMBINED FRAME BALCONY DOOR

ASSEMBLY COMBINED FRAME - BALCONY DOOR

MASTERLINE 8-Fu

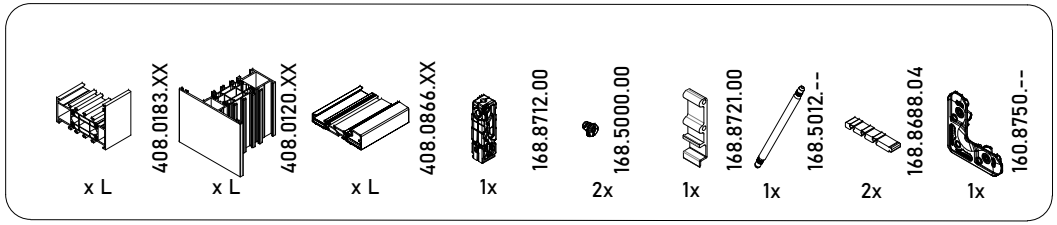

2 BUITENKADER DORMANT OUTER FRAME BLENDRAHMEN	1 FREZING 408.0866.XX FRAISAGE 408.0866.XX MILLING 408.0866.XX FRAESUNG 408.0866.XX	T-VERBINDER JONCTION-T T-BRACKET T-VERBINDER
408.0183.XX	D + 15	168.8711.00 168.8721.00
408.0160.XX	D + 15	168.8712.00 168.8742.00
408.0125.XX	D + 15	168.8713.00 168.8743.00

OVERVIEW CORNER CLEATS DOOR

POSITIONING OF CORNER CLEATS

MASTERLINE 8-Fu

TYPE 1

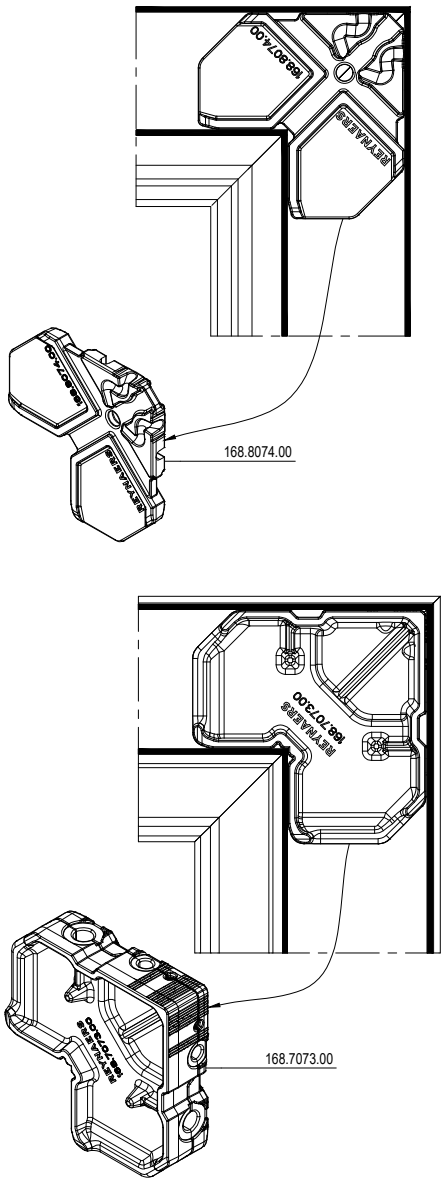

TYPE 2

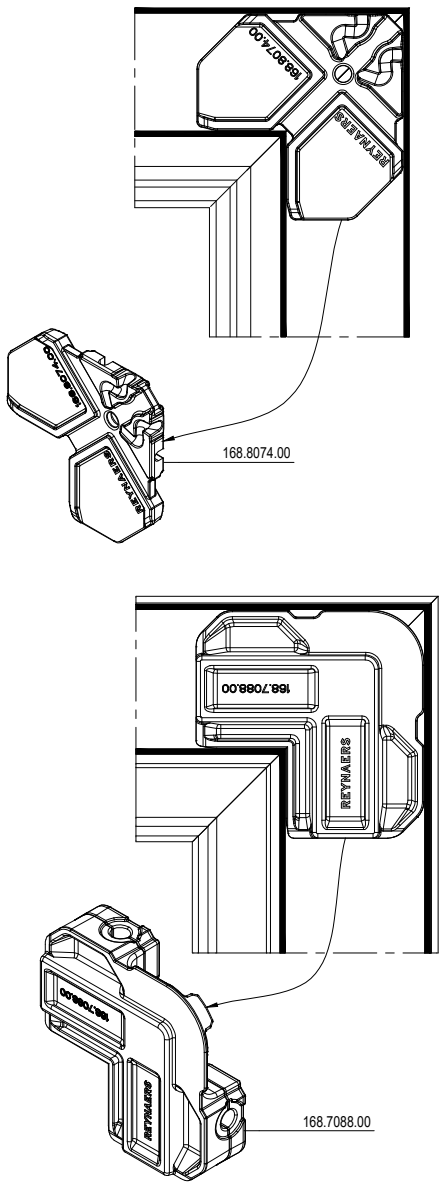

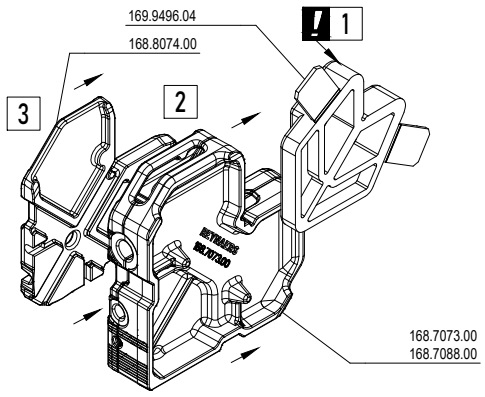

MONTAGEVOLGORDE
L 'ORDRE DE MONTAGE
THE ORDER OF ASSEMBLY
MONTAGEREIHENFOLGE
1 2 3 .

ENKEL BIJ 408.0094.XX EN 408.0096.XX
SEULEMENT POUR 408.0094.XX ET 408.0096.XX
ONLY FOR 408.0094.XX AND 408.0096.XX
NUR BEI 408.0094.XX UND 408.0096.XX

169.9496.04 MOETEN SAMEN WORDEN GEÏNSTALLERD MET 068.7798.04 OF 168.7073.00
169.9496.04 DOIT ÊTRE INSTALLÉ ENSEMBLE AVEC 168.7088.00 OU 168.7073.00
169.9496.04 MUST BE INSTALLED TOGETHER WITH 168.7088.00 OR 168.7073.00
169.9496.04 MUSS ZUSAMMEN MIT 168.7088.00 ODER 168.7073.00 INSTALLIERT WERDEN

HOEKVERBINDERS
EQUERRES
CORNER CLEATS
ECKVERBINDERS

168.7073.00 (7073)
168.7088.00 (7088)
168.8074.00 (8074)

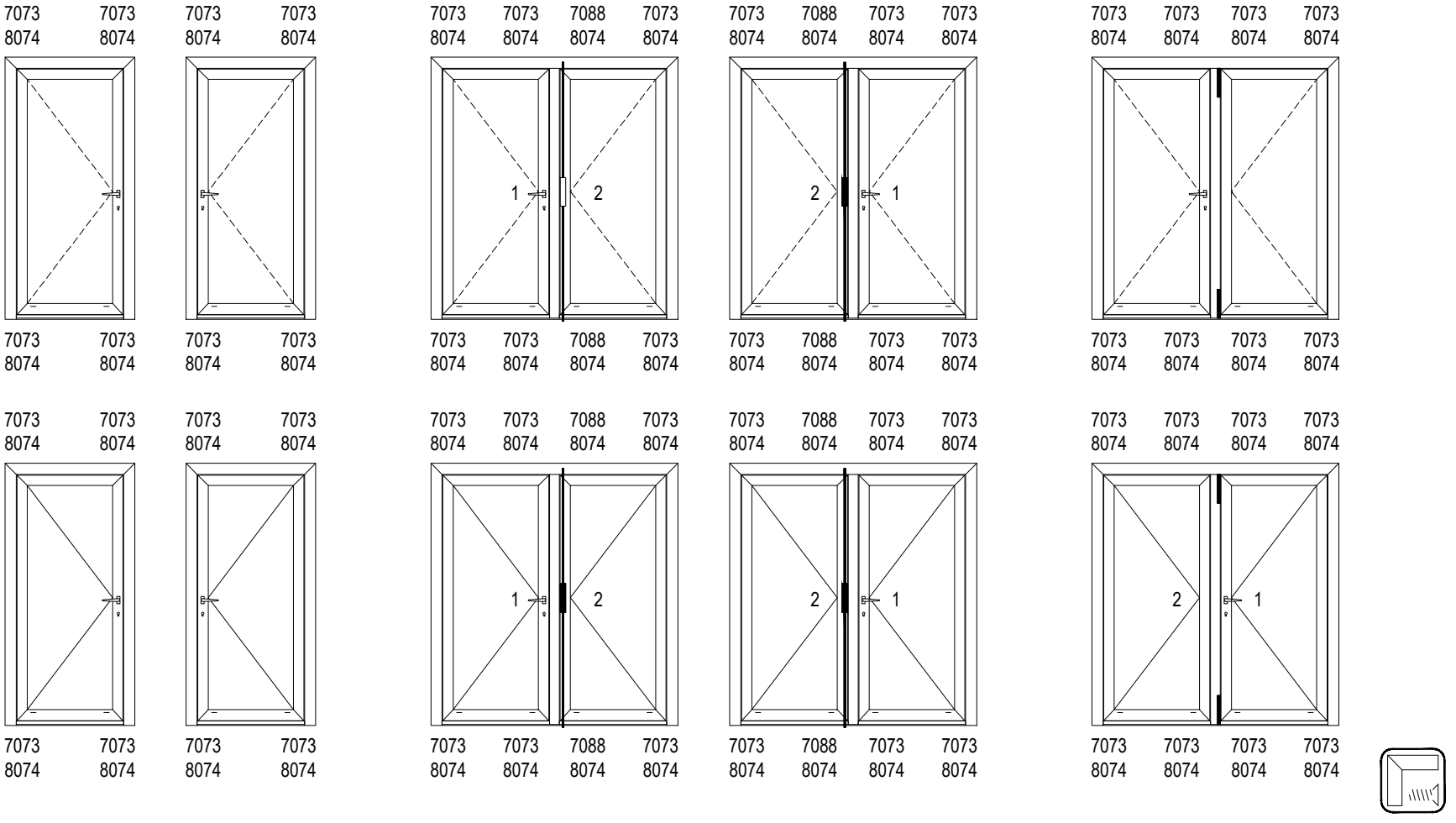

OVERVIEW CORNER CLEATS DOOR

POSITIONING OF CORNER CLEATS

MASTERLINE 8-Fu

TYPE 1

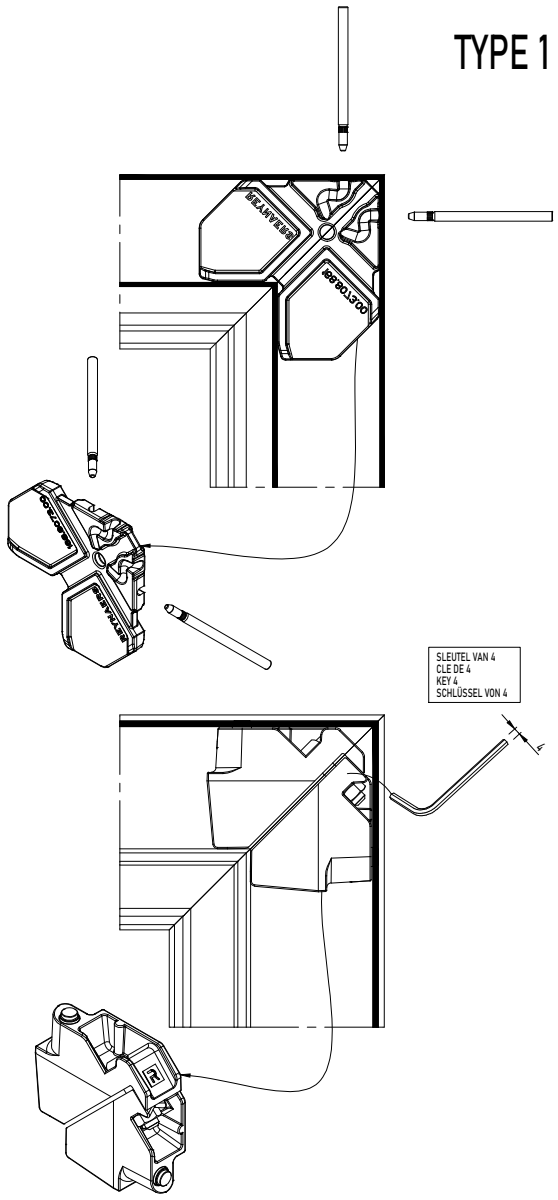

TYPE 2

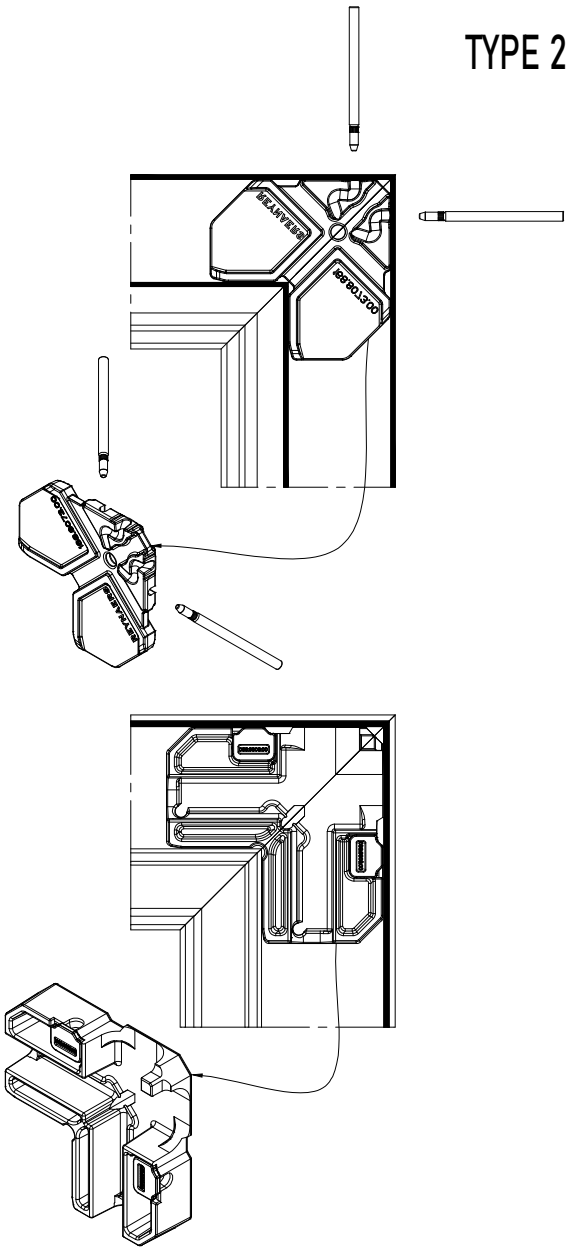

HOEKVERBINDERS
EQUERRES
CORNER CLEATS
ECKVERBINDERS

BIJKOMENDE INFO VOORBEREIDING/VERWERKING -> RAADPLEEG HOOFDSTUK B !
INFO COMPLEMENTAIRE PREPARATION/USINAGE -> CONSULTEZ CHAPITRE B !
ADDITIONAL INFO PREPARATION/PROCESSING -> CONSULT CHAPTER B !
ZUSAETZLICHE INFO VORBEREITUNG/VERARBEITUNG -> SIEHE KAPITEL B !

068.8818.00 (8818)
068.8808.00 (8808)
168.8074.00 (8074)

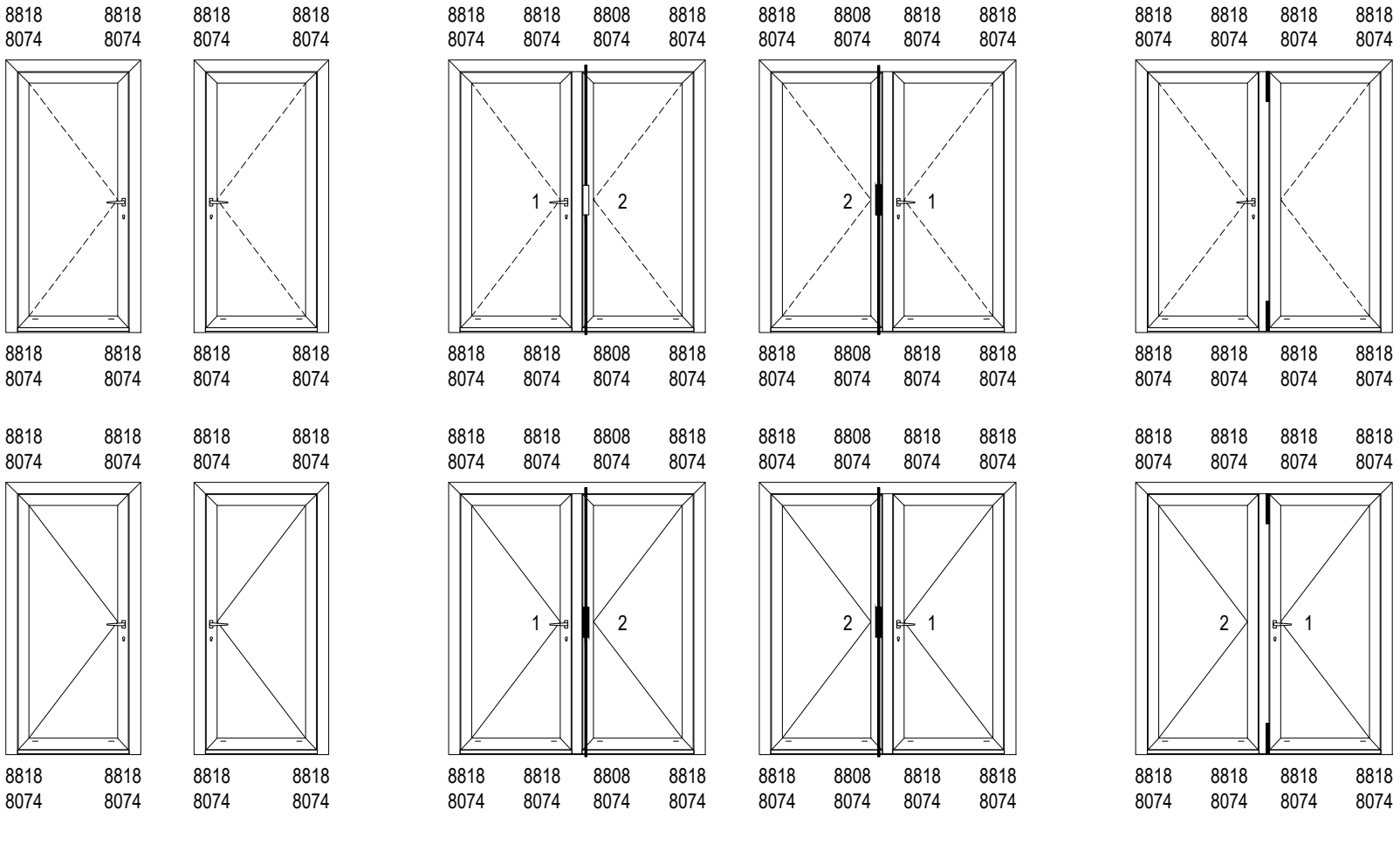

CORNER SCREW MC PANEL DOOR

GLUE INJECTION + CORNER CONNECTION 197.D600.00

MASTERLINE 8-Fu

169.9496.04 MOETEN SAMEN WORDEN GEÏNSTALLERD MET 068.7798.04 OF 168.7073.00
169.9496.04 DOIT ÊTRE INSTALLÉ ENSEMBLE AVEC 168.7088.00 OU 168.7073.00
169.9496.04 MUST BE INSTALLED TOGETHER WITH 168.7088.00 OR 168.7073.00
169.9496.04 MUSS ZUSAMMEN MIT 168.7088.00 ODER 168.7073.00 INSTALLIERT WERDEN

ENKEL BIJ 408.0094.XX EN 408.0096.XX
SEULEMENT POUR 408.0094.XX ET 408.0096.XX
ONLY FOR 408.0094.XX AND 408.0096.XX
NUR BEI 408.0094.XX UND 408.0096.XX

LIJMINJECTIE NA VERBINDING
INJECTION DE COLLE APRÈS LA CONNEXION
GLUE INJECTION AFTER CONNECTION
KLEBEINJEKTION NACH DEM ANSCHLUSS

(X) DICHTINGSMIDDEL
MATIERE D'ETANCHEITE
SEALING AGENT
ABDICHTUNG



TYPE 1

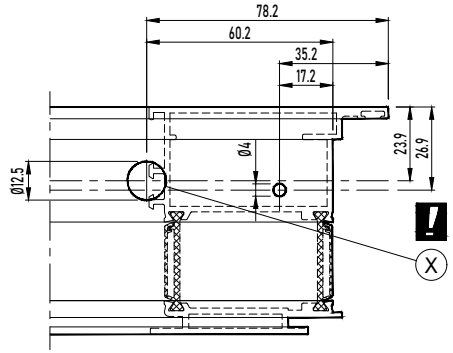

LIJMINJECTIE NA VERBINDING
INJECTION DE COLLE APRÈS LA CONNEXION
GLUE INJECTION AFTER CONNECTION
KLEBEINJEKTION NACH DEM ANSCHLUSS

LIJMINJECTIE VOOR VERBINDING
INJECTION DE COLLE AVANT LA CONNEXION
GLUE INJECTION BEFORE CONNECTION
KLEBEINJEKTION VOR ANSCHLUSS

TYPE 2

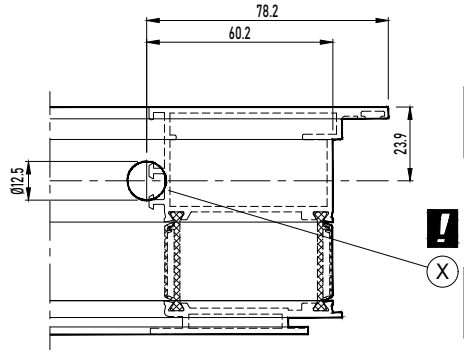

LIJMINJECTIE NA VERBINDING
INJECTION DE COLLE APRÈS LA CONNEXION
GLUE INJECTION AFTER CONNECTION
KLEBEINJEKTION NACH DEM ANSCHLUSS

LIJMINJECTIE VOOR VERBINDING
INJECTION DE COLLE AVANT LA CONNEXION
GLUE INJECTION BEFORE CONNECTION
KLEBEINJEKTION VOR ANSCHLUSS

CORNER SCREW MC PANEL DOOR

GLUE INJECTION + CORNER CONNECTION 197.D600.00

MASTERLINE 8-Fu

169.9496.04 MOETEN SAMEN WORDEN GEÏNSTALLERD MET 068.7798.04 OF 168.7073.00
169.9496.04 DOIT ÊTRE INSTALLÉ ENSEMBLE AVEC 168.7088.00 OU 168.7073.00
169.9496.04 MUST BE INSTALLED TOGETHER WITH 168.7088.00 OR 168.7073.00
169.9496.04 MUSS ZUSAMMEN MIT 168.7088.00 ODER 168.7073.00 INSTALLIERT WERDEN

ENKEL BIJ 408.0094.XX EN 408.0096.XX
SEULEMENT POUR 408.0094.XX ET 408.0096.XX
ONLY FOR 408.0094.XX AND 408.0096.XX
NUR BEI 408.0094.XX UND 408.0096.XX

LIJMINJECTIE NA VERBINDING
INJECTION DE COLLE APRÈS LA CONNEXION
GLUE INJECTION AFTER CONNECTION
KLEBEINJEKTION NACH DEM ANSCHLUSS

X DICHTINGSMIDDEL
MATIERE D'ETANCHEITE
SEALING AGENT
ABDICHTUNG



TYPE 1

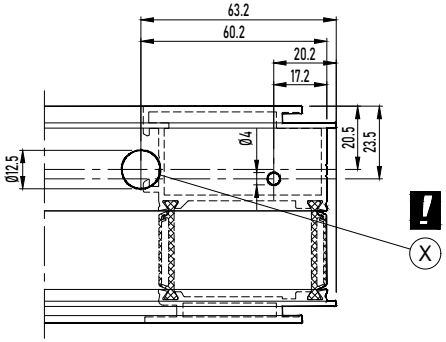

LIJMINJECTIE NA VERBINDING
INJECTION DE COLLE APRÈS LA CONNEXION
GLUE INJECTION AFTER CONNECTION
KLEBEINJEKTION NACH DEM ANSCHLUSS

LIJMINJECTIE VOOR VERBINDING
INJECTION DE COLLE AVANT LA CONNEXION
GLUE INJECTION BEFORE CONNECTION
KLEBEINJEKTION VOR ANSCHLUSS

TYPE 2

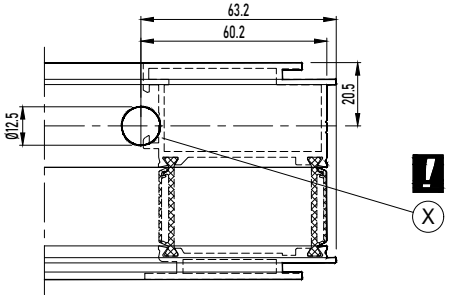

LIJMINJECTIE NA VERBINDING
INJECTION DE COLLE APRÈS LA CONNEXION
GLUE INJECTION AFTER CONNECTION
KLEBEINJEKTION NACH DEM ANSCHLUSS

LIJMINJECTIE VOOR VERBINDING
INJECTION DE COLLE AVANT LA CONNEXION
GLUE INJECTION BEFORE CONNECTION
KLEBEINJEKTION VOR ANSCHLUSS

CORNER SCREW MC PANEL DOOR

GLUE INJECTION + CORNER CONNECTION 197.D600.00

MASTERLINE 8-Fu

169.9496.04 MOETEN SAMEN WORDEN GEÏNSTALLERD MET 068.7798.04 OF 168.7073.00
169.9496.04 DOIT ÊTRE INSTALLÉ ENSEMBLE AVEC 168.7088.00 OU 168.7073.00
169.9496.04 MUST BE INSTALLED TOGETHER WITH 168.7088.00 OR 168.7073.00
169.9496.04 MUSS ZUSAMMEN MIT 168.7088.00 ODER 168.7073.00 INSTALLIERT WERDEN

ENKEL BIJ 408.0094.XX EN 408.0096.XX
SEULEMENT POUR 408.0094.XX ET 408.0096.XX
ONLY FOR 408.0094.XX AND 408.0096.XX
NUR BEI 408.0094.XX UND 408.0096.XX

LIJMINJECTIE NA VERBINDING
INJECTION DE COLLE APRÈS LA CONNEXION
GLUE INJECTION AFTER CONNECTION
KLEBEINJEKTION NACH DEM ANSCHLUSS

X DICHTINGSMIDDEL
MATIERE D'ETANCHEITE
SEALING AGENT
ABDICHTUNG



TYPE 1

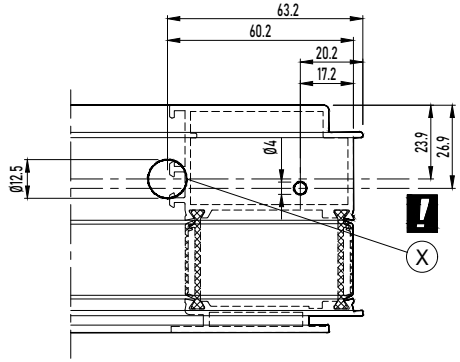

LIJMINJECTIE NA VERBINDING
INJECTION DE COLLE APRÈS LA CONNEXION
GLUE INJECTION AFTER CONNECTION
KLEBEINJEKTION NACH DEM ANSCHLUSS

LIJMINJECTIE VOOR VERBINDING
INJECTION DE COLLE AVANT LA CONNEXION
GLUE INJECTION BEFORE CONNECTION
KLEBEINJEKTION VOR ANSCHLUSS

TYPE 2

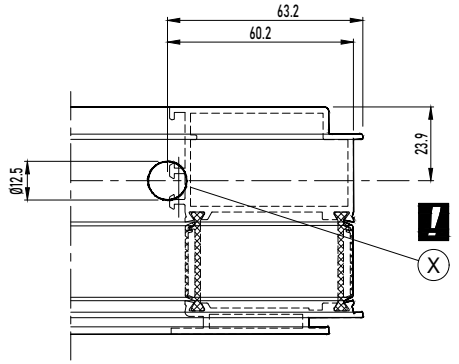

LIJMINJECTIE NA VERBINDING
INJECTION DE COLLE APRÈS LA CONNEXION
GLUE INJECTION AFTER CONNECTION
KLEBEINJEKTION NACH DEM ANSCHLUSS

LIJMINJECTIE VOOR VERBINDING
INJECTION DE COLLE AVANT LA CONNEXION
GLUE INJECTION BEFORE CONNECTION
KLEBEINJEKTION VOR ANSCHLUSS

CORNER SCREW MC PANEL DOOR

SCREW CORNER CONNECTION 097.P300.00 + 097.E700.00

MASTERLINE 8-Fu

X DICHTINGSMIDDEL
MATIERE D'ETANCHEITE
SEALING AGENT
ABDICHTUNG



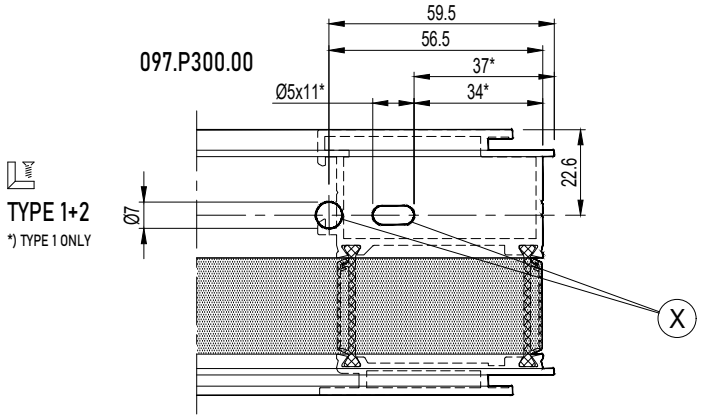

CORNER SCREW MFPT PANEL DOOR

GLUE INJECTION + CORNER CONNECTION 197.D600.00 | 097.0183.00

MASTERLINE 8-Fu

169.9496.04 MOETEN SAMEN WORDEN GEÏNSTALLERD MET 068.7798.04 OF 168.7073.00
169.9496.04 DOIT ÊTRE INSTALLÉ ENSEMBLE AVEC 168.7088.00 OU 168.7073.00
169.9496.04 MUST BE INSTALLED TOGETHER WITH 168.7088.00 OR 168.7073.00
169.9496.04 MUSS ZUSAMMEN MIT 168.7088.00 ODER 168.7073.00 INSTALLIERT WERDEN

ENKEL BIJ 408.0094.XX EN 408.0096.XX
SEULEMENT POUR 408.0094.XX ET 408.0096.XX
ONLY FOR 408.0094.XX AND 408.0096.XX
NUR BEI 408.0094.XX UND 408.0096.XX

LIJMINJECTIE NA VERBINDING
INJECTION DE COLLE APRÈS LA CONNEXION
GLUE INJECTION AFTER CONNECTION
KLEBEINJEKTION NACH DEM ANSCHLUSS

X DICHTINGSMIDDEL
MATIERE D'ETANCHEITE
SEALING AGENT
ABDICHTUNG



TYPE 1 a

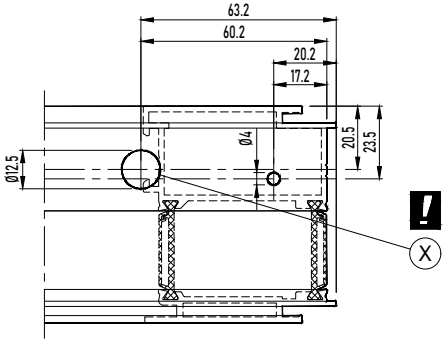

LIJMINJECTIE NA VERBINDING
INJECTION DE COLLE APRÈS LA CONNEXION
GLUE INJECTION AFTER CONNECTION
KLEBEINJEKTION NACH DEM ANSCHLUSS

LIJMINJECTIE VOOR VERBINDING
INJECTION DE COLLE AVANT LA CONNEXION
GLUE INJECTION BEFORE CONNECTION
KLEBEINJEKTION VOR ANSCHLUSS

TYPE 2

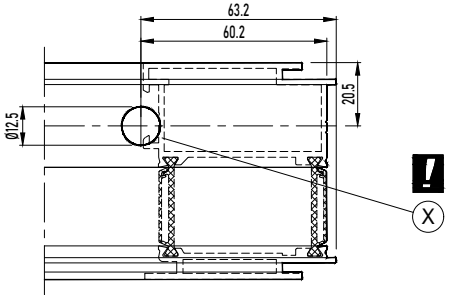

LIJMINJECTIE NA VERBINDING
INJECTION DE COLLE APRÈS LA CONNEXION
GLUE INJECTION AFTER CONNECTION
KLEBEINJEKTION NACH DEM ANSCHLUSS

LIJMINJECTIE VOOR VERBINDING
INJECTION DE COLLE AVANT LA CONNEXION
GLUE INJECTION BEFORE CONNECTION
KLEBEINJEKTION VOR ANSCHLUSS

CORNER SCREW MFPT PANEL DOOR

GLUE INJECTION + CORNER CONNECTION 197.D600.00 | 097.0183.00

MASTERLINE 8-Fu

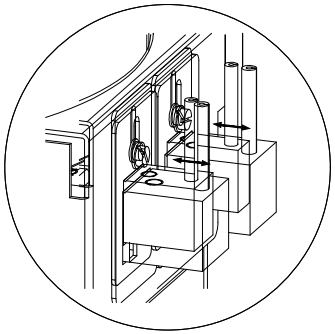

ALGEMEEN PRINCIPE
GENERAL PRINCIPE
GENERAL PRINCIPLE
GENERAL PRINCIPLE
ALLGEMEIN PRINZIP



A

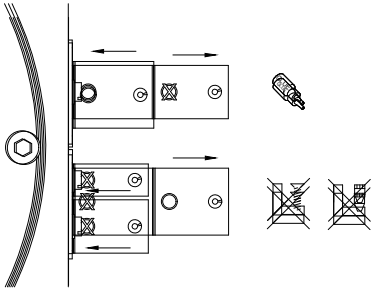





B

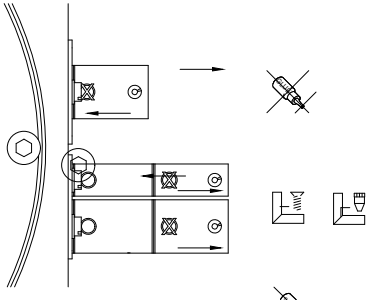

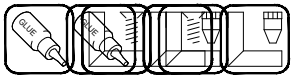

A + B

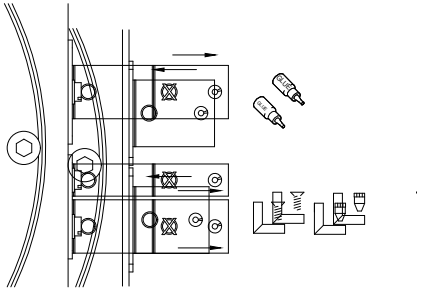

CORNER SCREW MFPT PANEL DOOR

GLUE INJECTION + CORNER CONNECTION 197.D600.00 | 097.0183.00

MASTERLINE 8-Fu

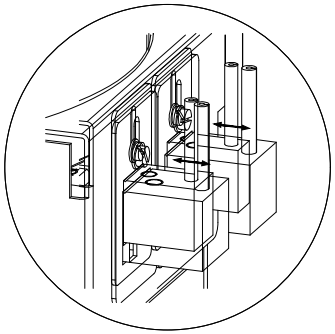

ALGEMEEN PRINCIPE
GENERAL PRINCIPE
GENERAL PRINCIPLE
ALLGEMEIN PRINZIP



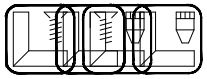

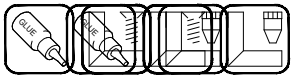

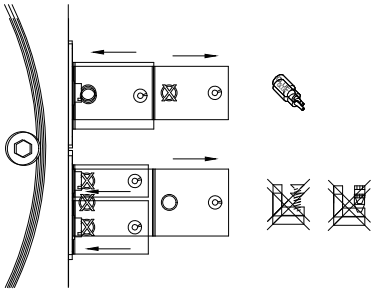

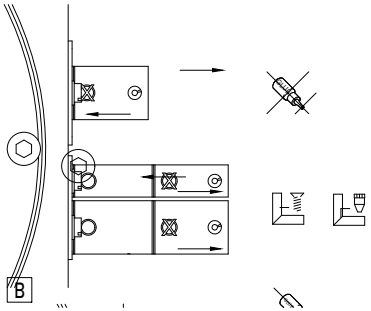

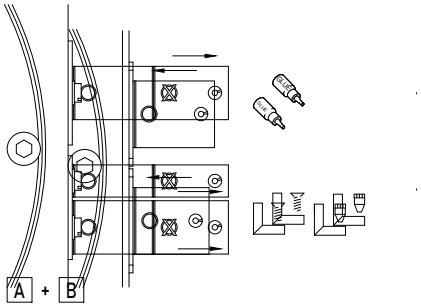



CORNER SCREW MFPT PANEL DOOR

GLUE INJECTION + CORNER CONNECTION 197.D600.00 | 097.0183.00

MASTERLINE 8-Fu

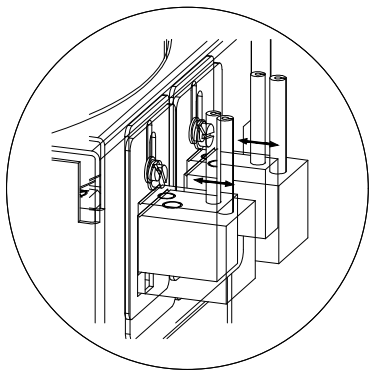

ALGEMEEN PRINCIPE
GENERAL PRINCIPE
GENERAL PRINCIPLE
ALLGEMEIN PRINZIP

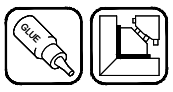

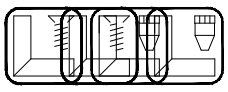

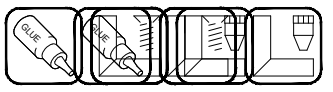

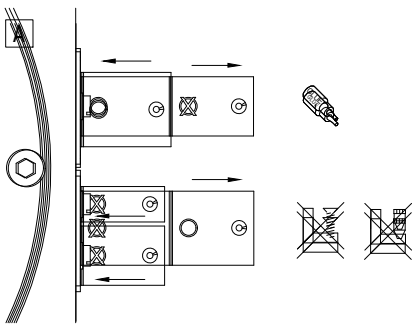



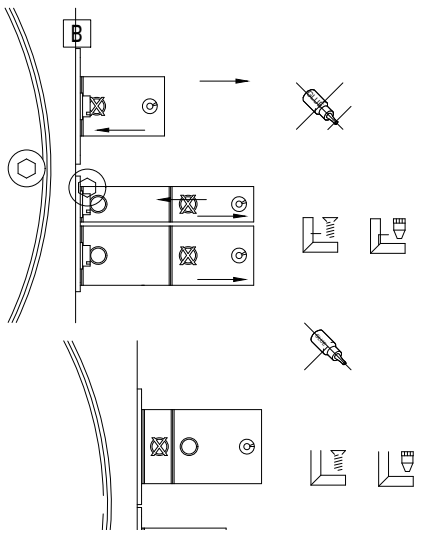

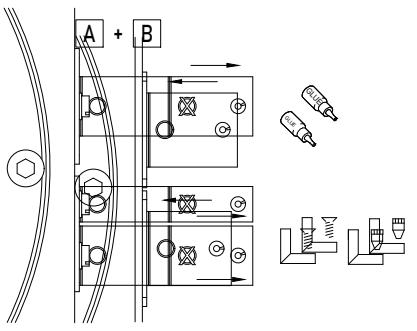

CORNER SCREW MFPT PANEL DOOR

GLUE INJECTION + CORNER CONNECTION 197.D600.00 | 097.0183.00

MASTERLINE 8-Fu

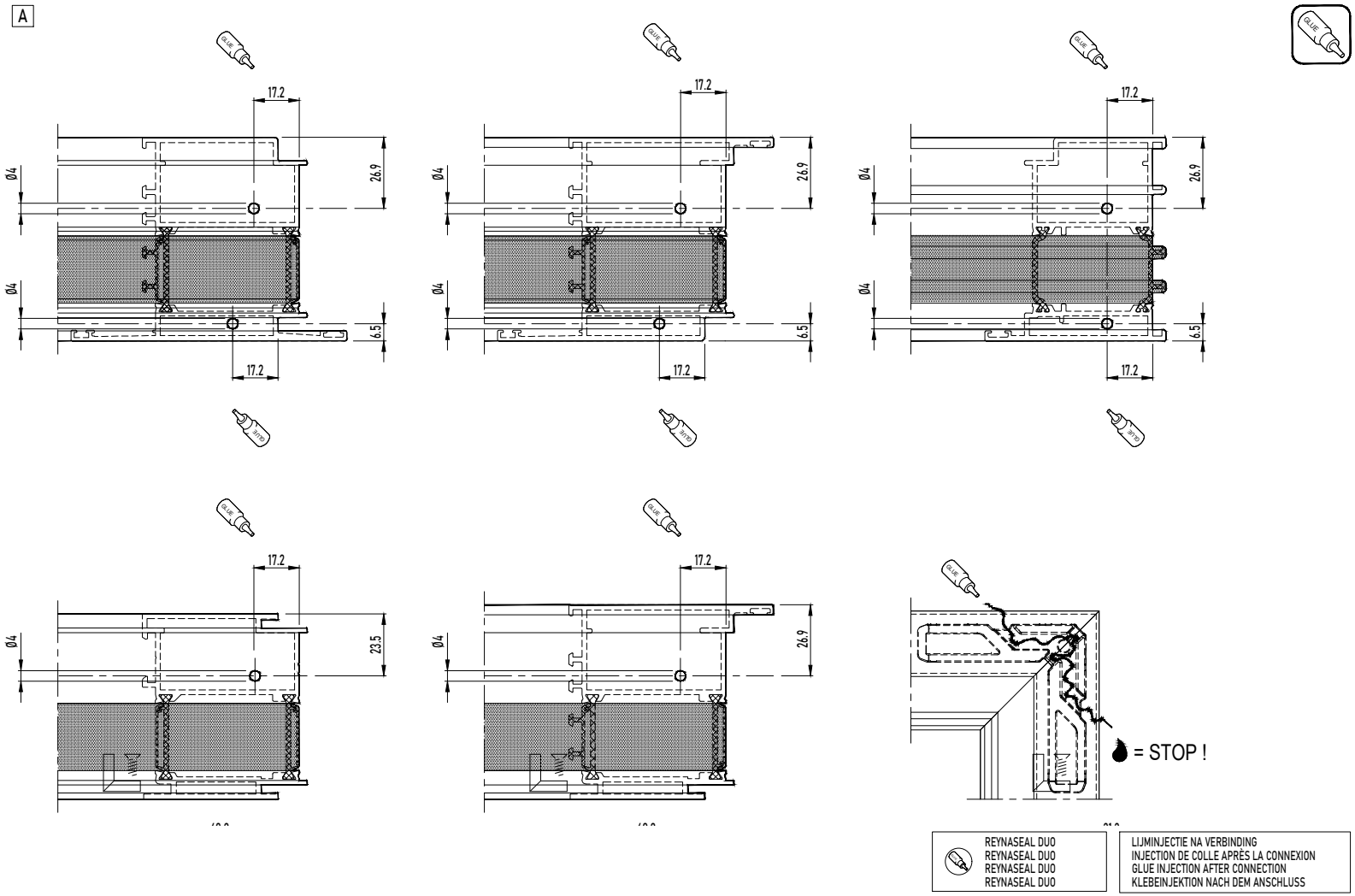

Aanpassing diameter: zie handleiding 197.D600.00 / Modification diamètre: voir manuel 197.D600.00
Change size diameter: see manual 197.D600.00 / Wechsel Durchmesser: siehe Gebrauchsanweisung 197.D600.00

CORNER SCREW MFPT PANEL DOOR

GLUE INJECTION + CORNER CONNECTION 197.D600.00 | 097.0183.00

MASTERLINE 8-Fu

B

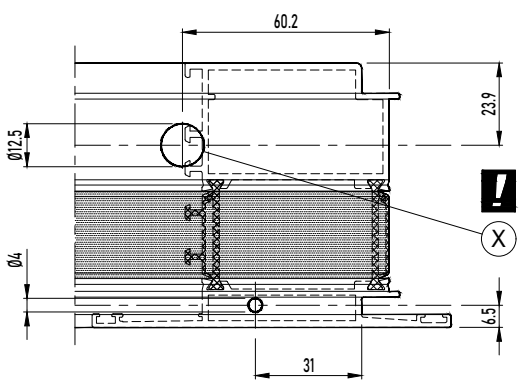

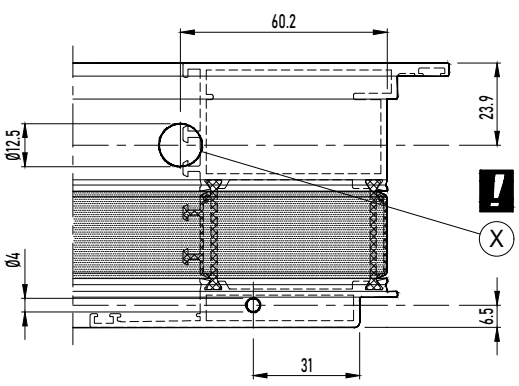

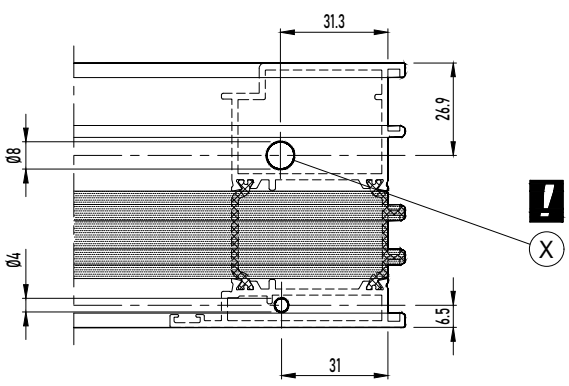

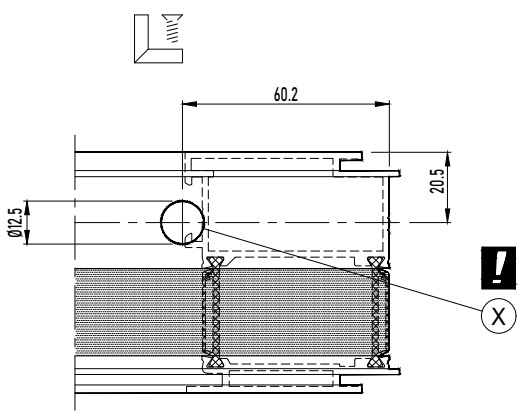

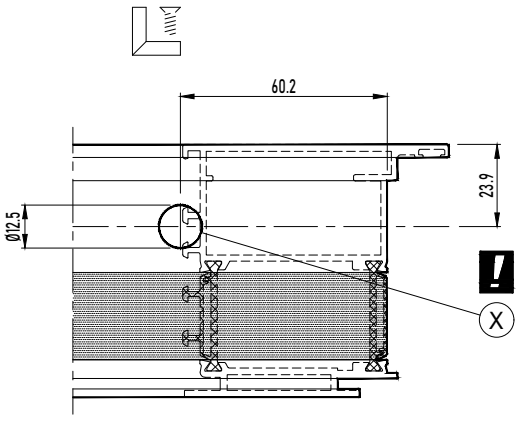

LIJMINJECTIE VOOR VERBINDING
INJECTION DE COLLE AVANT LA CONNEXION
GLUE INJECTION BEFORE CONNECTION
KLEBEINJEKTION VOR ANSCHLUSS

MONTAGEVOLGORDE
L'ORDRE DE MONTAGE
THE ORDER OF ASSEMBLY
MONTAGEREIHENFOLGE
1 2 3 .

X DICHTINGSMIDDEL
MATIERE D'ETANCHEITE
SEALING AGENT
ABDICHTUNG

Aanpassing diameter: zie handleiding 197.D600.00 / Modification diamètre: voir manuel 197.D600.00
Change size diameter: see manual 197.D600.00 / Wechsel Durchmesser: siehe Gebrauchsanweisung 197.D600.00

CORNER SCREW MFPT PANEL DOOR

GLUE INJECTION + CORNER CONNECTION 197.D600.00 | 097.0183.00

MASTERLINE 8-Fu

A + B

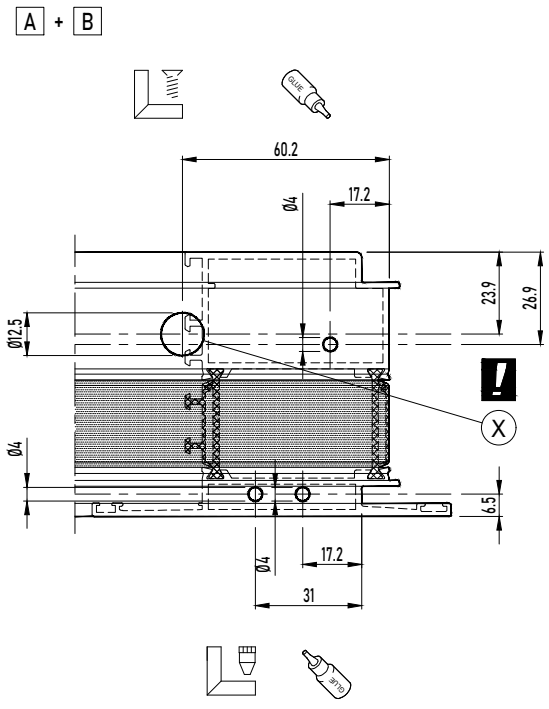

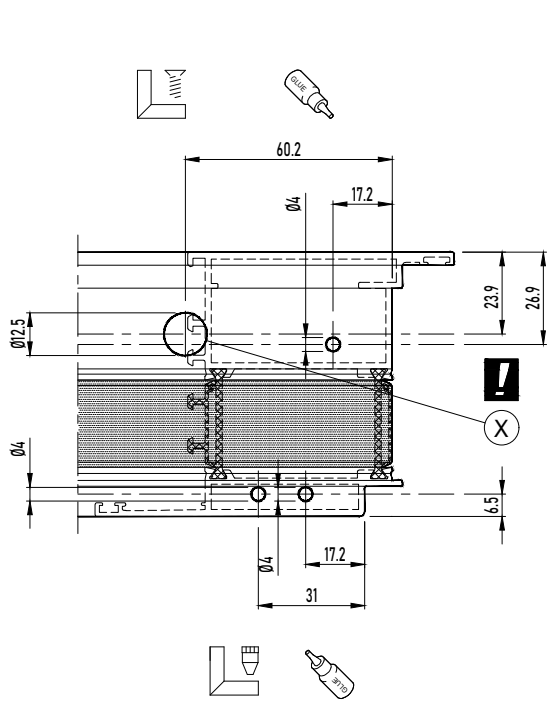

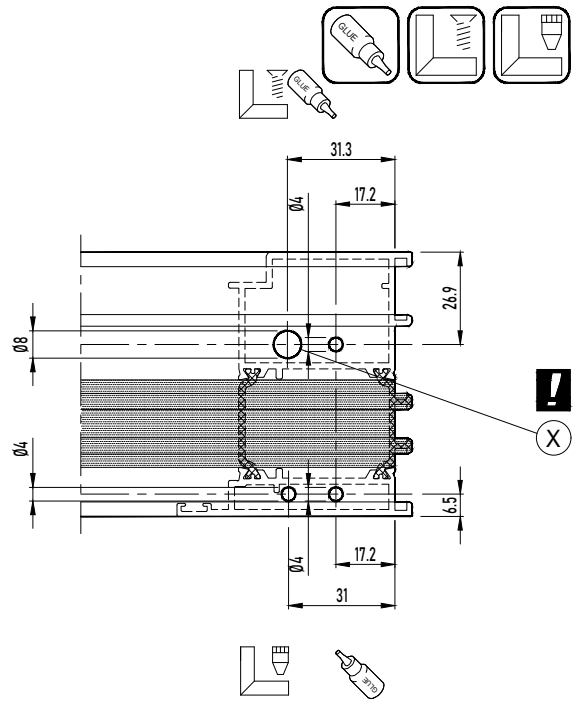

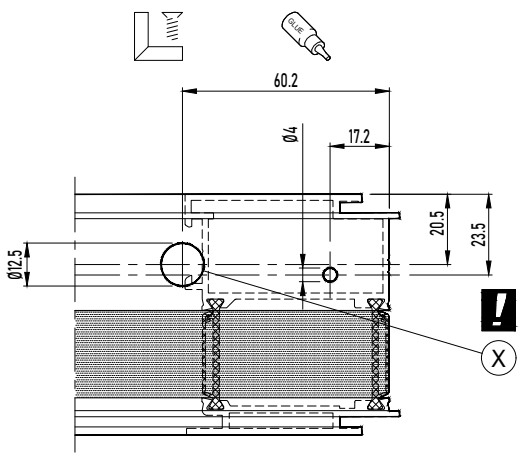

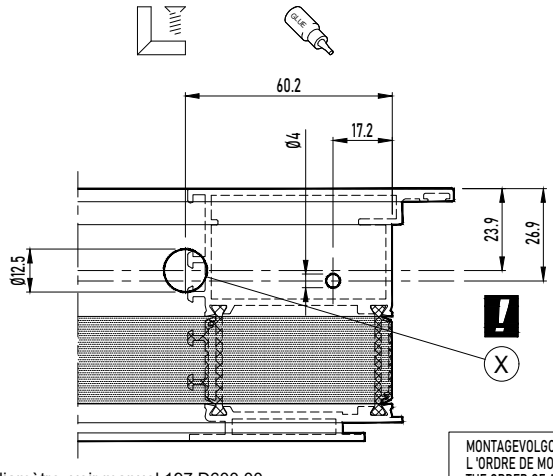

Aanpassing diameter: zie handleiding 197.D600.00 / Modification diamètre: voir manuel 197.D600.00
Change size diameter: see manual 197.D600.00 / Wechsel Durchmesser: siehe Gebrauchsanweisung 197.D600.00

LIJMINJECTIE NA VERBINDING
INJECTION DE COLLE APRÈS LA CONNEXION
GLUE INJECTION AFTER CONNECTION
KLEBEINJEKTION NACH DEM ANSCHLUSS

MONTAGEVOLGORDE
L 'ORDRE DE MONTAGE
THE ORDER OF ASSEMBLY
MONTAGEREIHENFOLGE
1 2 3 .

X DICHTINGSMIDDEL
MATIERE D'ETANCHEITE
SEALING AGENT
ABDICHTUNG

CORNER SCREW MFPT PANEL DOOR

GLUE INJECTION + CORNER CONNECTION 197.D600.00 | 097.0183.00

MASTERLINE 8-Fu

169.9496.04 MOETEN SAMEN WORDEN GEÏNSTALLERD MET 068.7798.04 OF 168.7073.00
169.9496.04 DOIT ÊTRE INSTALLÉ ENSEMBLE AVEC 168.7088.00 OU 168.7073.00
169.9496.04 MUST BE INSTALLED TOGETHER WITH 168.7088.00 OR 168.7073.00
169.9496.04 MUSS ZUSAMMEN MIT 168.7088.00 ODER 168.7073.00 INSTALLIERT WERDEN

ENKEL BIJ 408.0094.XX EN 408.0096.XX
SEULEMENT POUR 408.0094.XX ET 408.0096.XX
ONLY FOR 408.0094.XX AND 408.0096.XX
NUR BEI 408.0094.XX UND 408.0096.XX

LIJMINJECTIE NA VERBINDING
INJECTION DE COLLE APRÈS LA CONNEXION
GLUE INJECTION AFTER CONNECTION
KLEBEINJEKTION NACH DEM ANSCHLUSS

X DICHTINGSMIDDEL
MATIERE D'ETANCHEITE
SEALING AGENT
ABDICHTUNG



TYPE 1

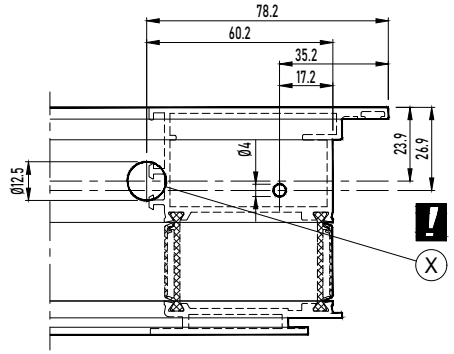

LIJMINJECTIE NA VERBINDING
INJECTION DE COLLE APRÈS LA CONNEXION
GLUE INJECTION AFTER CONNECTION
KLEBEINJEKTION NACH DEM ANSCHLUSS

LIJMINJECTIE VOOR VERBINDING
INJECTION DE COLLE AVANT LA CONNEXION
GLUE INJECTION BEFORE CONNECTION
KLEBEINJEKTION VOR ANSCHLUSS

TYPE 2

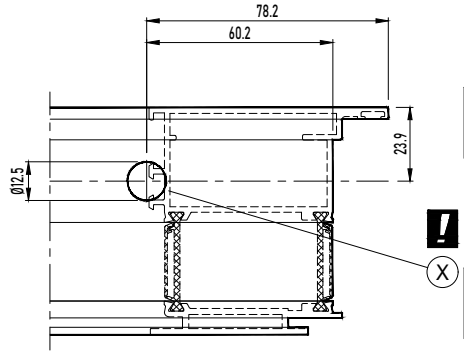

LIJMINJECTIE NA VERBINDING
INJECTION DE COLLE APRÈS LA CONNEXION
GLUE INJECTION AFTER CONNECTION
KLEBEINJEKTION NACH DEM ANSCHLUSS

LIJMINJECTIE VOOR VERBINDING
INJECTION DE COLLE AVANT LA CONNEXION
GLUE INJECTION BEFORE CONNECTION
KLEBEINJEKTION VOR ANSCHLUSS

CORNER SCREW MFPT PANEL DOOR

GLUE INJECTION + CORNER CONNECTION 197.D600.00 | 097.0183.00

MASTERLINE 8-Fu

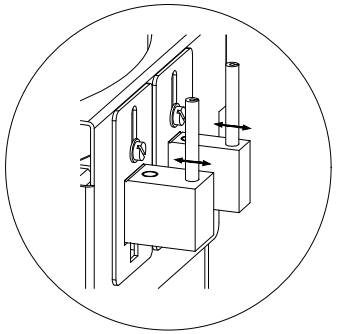

ALGEMEEN PRINCIPE
GENERAL PRINCIPE
GENERAL PRINCIPLE
ALLGEMEIN PRINZIP



A

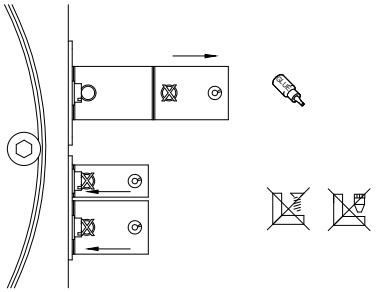



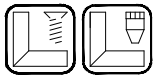

B

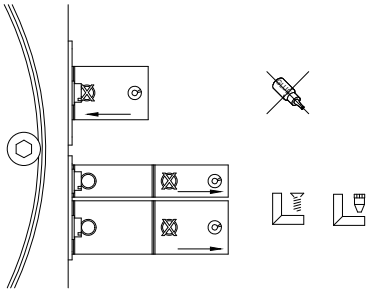



A + B

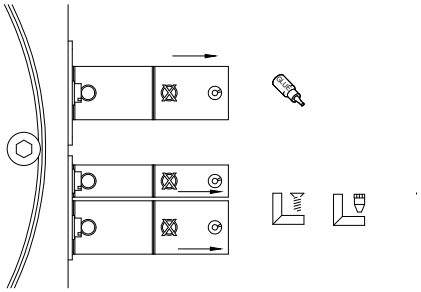

CORNER SCREW MFPT PANEL DOOR

GLUE INJECTION + CORNER CONNECTION 197.D600.00 | 097.0183.00

MASTERLINE 8-Fu

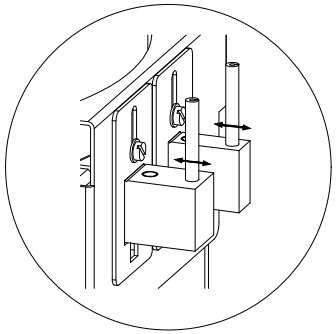

ALGEMEEN PRINCIPE
GENERAL PRINCIPE
GENERAL PRINCIPLE
ALLGEMEIN PRINZIP



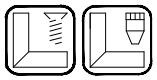



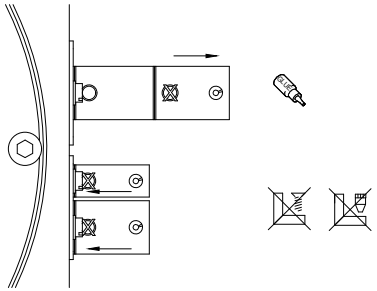

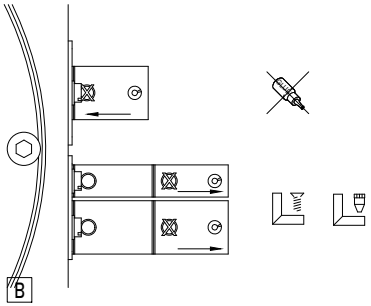

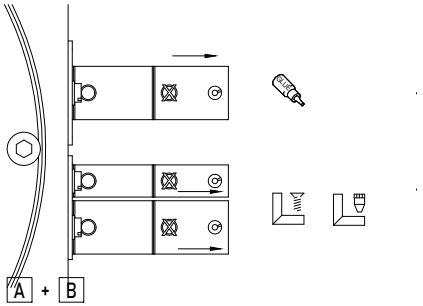



CORNER SCREW MFPT PANEL DOOR

GLUE INJECTION + CORNER CONNECTION 197.D600.00 | 097.0183.00

MASTERLINE 8-Fu

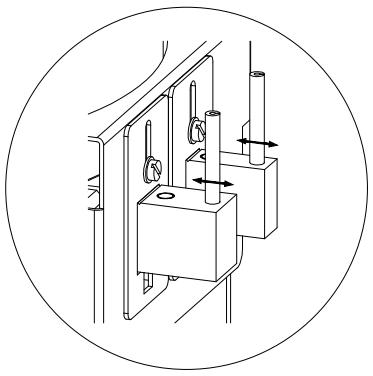

ALGEMEEN PRINCIPE
GENERAL PRINCIPE
GENERAL PRINCIPLE
ALLGEMEIN PRINZIP

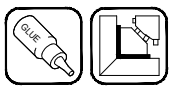

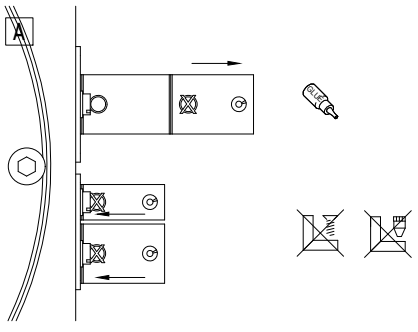



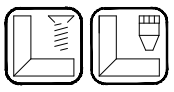

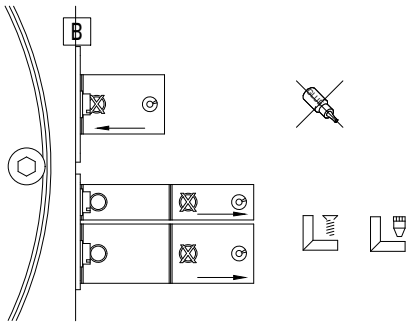



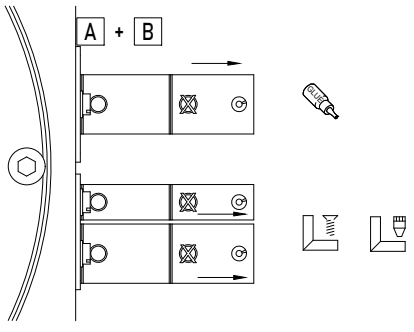

CORNER SCREW MFPT PANEL DOOR

GLUE INJECTION + CORNER CONNECTION 197.D600.00 | 097.0183.00

MASTERLINE 8-Fu

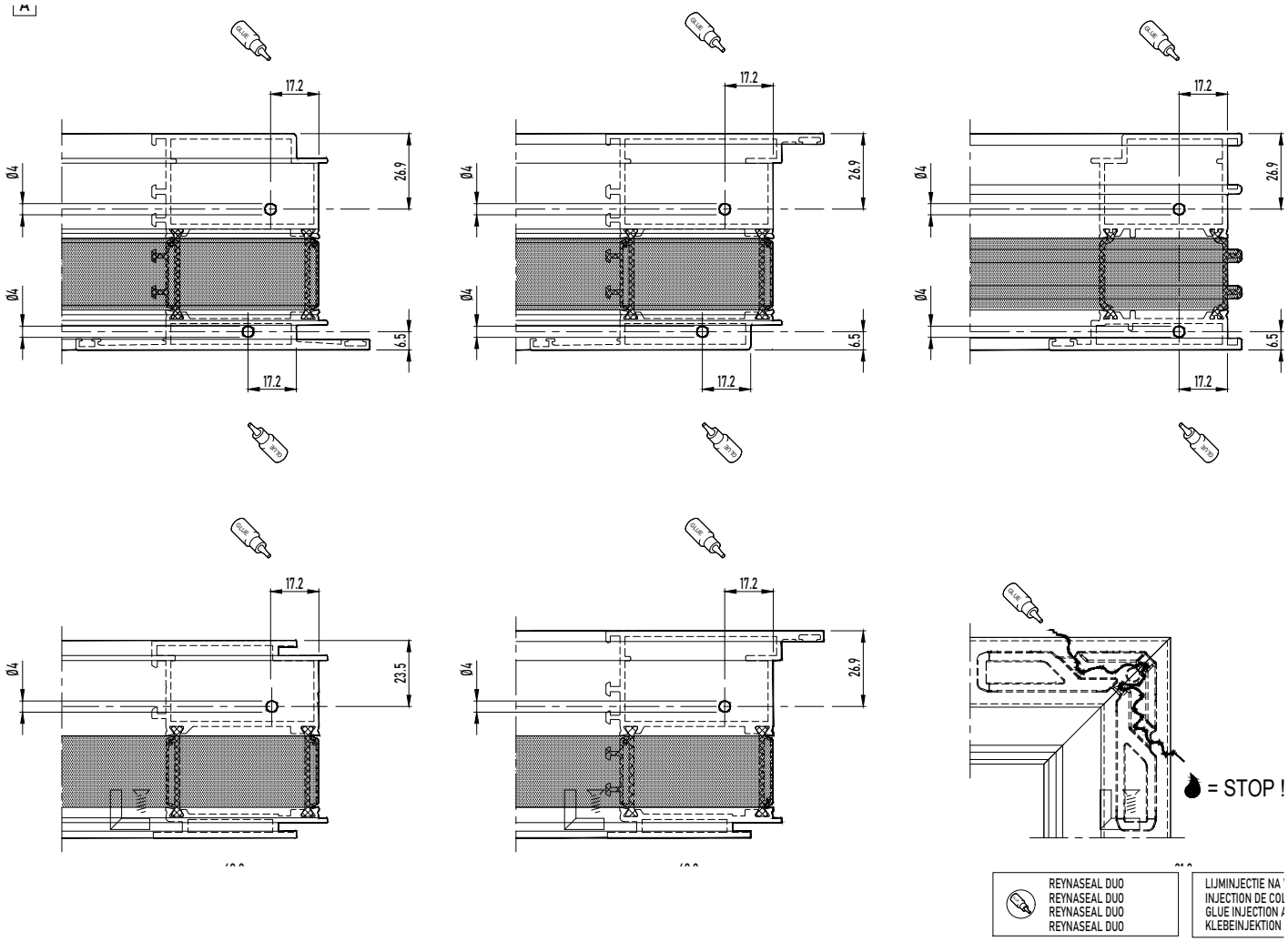

Aanpassing diameter: zie handleiding 197.D600.00 / Modification diamètre: voir manuel 197.D600.00
Change size diameter: see manual 197.D600.00 / Wechsel Durchmesser: siehe Gebrauchsanweisung 197.D600.00

CORNER SCREW MFPT PANEL DOOR

GLUE INJECTION + CORNER CONNECTION 197.D600.00 | 097.0183.00

MASTERLINE 8-Fu

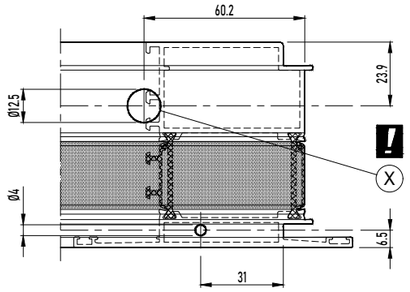

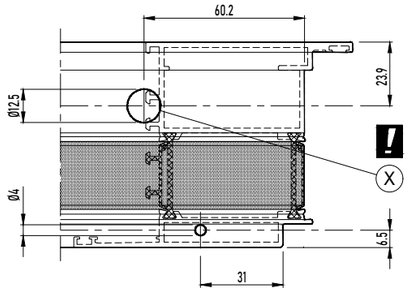

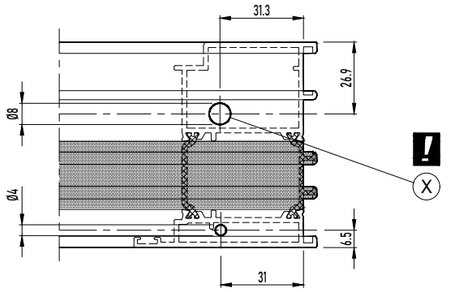

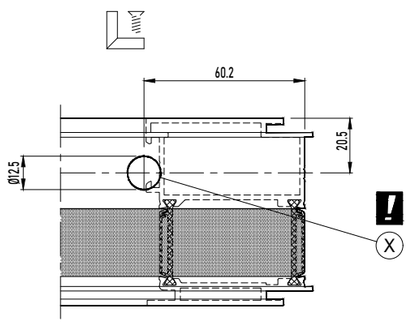

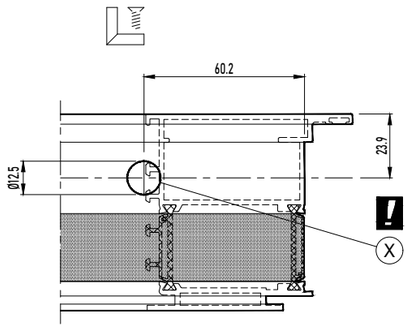

LIJMINJECTIE VOOR VERBINDING
INJECTION DE COLLE AVANT LA CONNEXION
GLUE INJECTION BEFORE CONNECTION
KLEBEINJEKTION VOR ANSCHLUSS

MONTAGEVOLGORDE
L'ORDRE DE MONTAGE
THE ORDER OF ASSEMBLY
MONTAGEREIHENFOLGE
1 2 3 .

X DICHTINGSMIDDEL
MATIERE D'ETANCHEITE
SEALING AGENT
ABDICHTUNG

Aanpassing diameter: zie handleiding 197.D600.00 / Modification diamètre: voir manuel 197.D600.00
Change size diameter: see manual 197.D600.00 / Wechsel Durchmesser: siehe Gebrauchsanweisung 197.D600.00

CORNER SCREW MFPT PANEL DOOR

GLUE INJECTION + CORNER CONNECTION 197.D600.00 | 097.0183.00

MASTERLINE 8-Fu

A + B

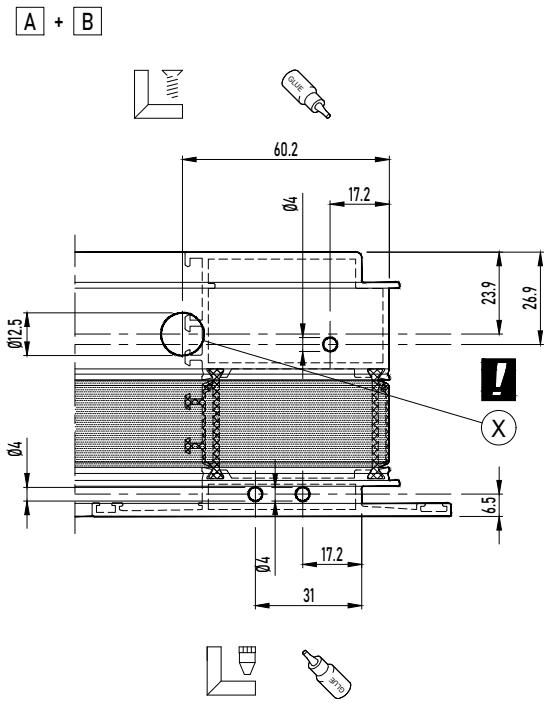

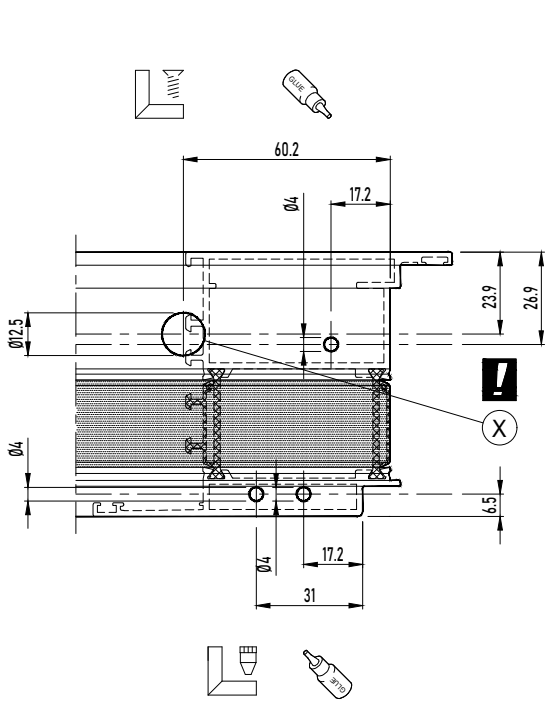

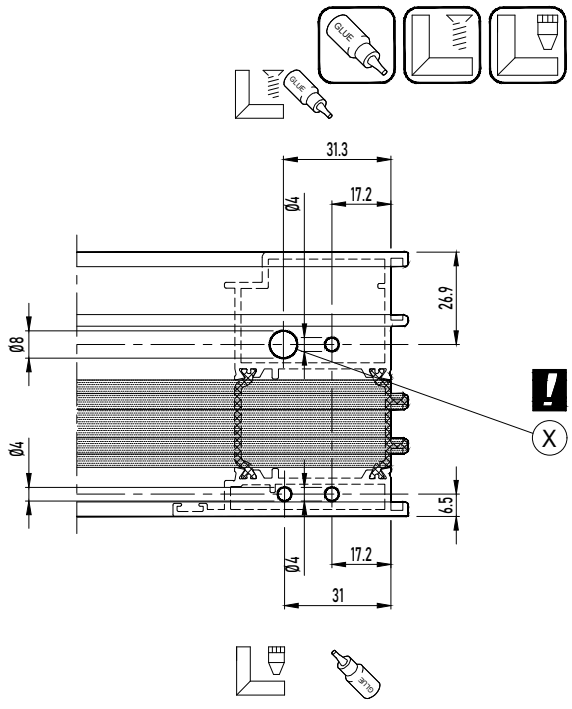

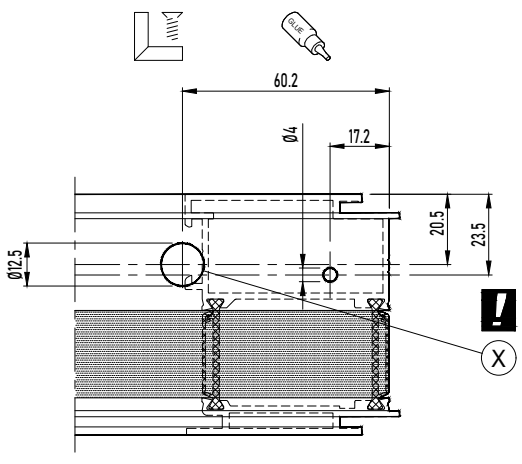

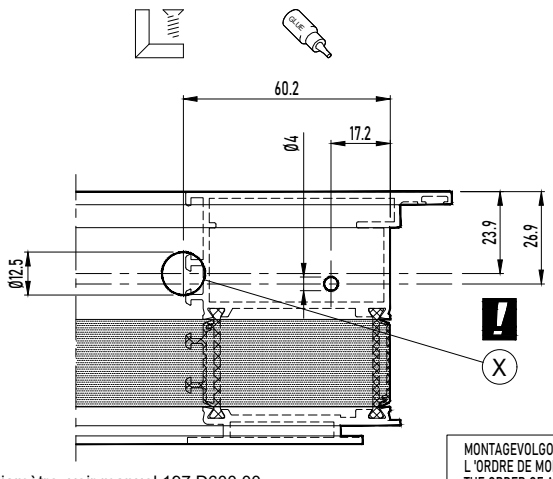

Aanpassing diameter: zie handleiding 197.D600.00 / Modification diamètre: voir manuel 197.D600.00
Change size diameter: see manual 197.D600.00 / Wechsel Durchmesser: siehe Gebrauchsanweisung 197.D600.00

MONTAGEVOLGORDE
L 'ORDRE DE MONTAGE
THE ORDER OF ASSEMBLY
MONTAGEREIHENFOLGE
1 2 3 .

LIJMINJECTIE NA VERBINDING
INJECTION DE COLLE APRÈS LA CONNEXION
GLUE INJECTION AFTER CONNECTION
KLEBEINJEKTION NACH DEM ANSCHLUSS

X DICHTINGSMIDDEL
MATIERE D'ETANCHEITE
SEALING AGENT
ABDICHTUNG

CORNER SCREW MFPT PANEL DOOR

GLUE INJECTION + CORNER CONNECTION 197.D600.00

MASTERLINE 8-Fu

169.9496.04 MOETEN SAMEN WORDEN GEÏNSTALLERD MET 068.7798.04 OF 168.7073.00
169.9496.04 DOIT ÊTRE INSTALLÉ ENSEMBLE AVEC 168.7088.00 OU 168.7073.00
169.9496.04 MUST BE INSTALLED TOGETHER WITH 168.7088.00 OR 168.7073.00
169.9496.04 MUSS ZUSAMMEN MIT 168.7088.00 ODER 168.7073.00 INSTALLIERT WERDEN

ENKEL BIJ 408.0094.XX EN 408.0096.XX
SEULEMENT POUR 408.0094.XX ET 408.0096.XX
ONLY FOR 408.0094.XX AND 408.0096.XX
NUR BEI 408.0094.XX UND 408.0096.XX

LIJMINJECTIE NA VERBINDING
INJECTION DE COLLE APRÈS LA CONNEXION
GLUE INJECTION AFTER CONNECTION
KLEBEINJEKTION NACH DEM ANSCHLUSS

X DICHTINGSMIDDEL
MATIERE D'ETANCHEITE
SEALING AGENT
ABDICHTUNG



TYPE 1

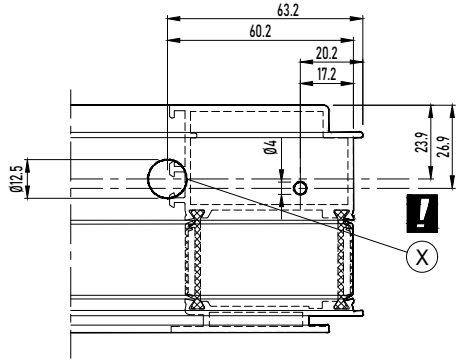

LIJMINJECTIE NA VERBINDING
INJECTION DE COLLE APRÈS LA CONNEXION
GLUE INJECTION AFTER CONNECTION
KLEBEINJEKTION NACH DEM ANSCHLUSS

LIJMINJECTIE VOOR VERBINDING
INJECTION DE COLLE AVANT LA CONNEXION
GLUE INJECTION BEFORE CONNECTION
KLEBEINJEKTION VOR ANSCHLUSS

TYPE 2

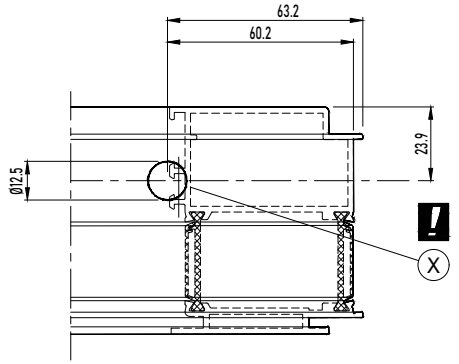

LIJMINJECTIE NA VERBINDING
INJECTION DE COLLE APRÈS LA CONNEXION
GLUE INJECTION AFTER CONNECTION
KLEBEINJEKTION NACH DEM ANSCHLUSS

LIJMINJECTIE VOOR VERBINDING
INJECTION DE COLLE AVANT LA CONNEXION
GLUE INJECTION BEFORE CONNECTION
KLEBEINJEKTION VOR ANSCHLUSS

CORNER SCREW MFPT PANEL DOOR

GLUE INJECTION + CORNER CONNECTION 197.D600.00

MASTERLINE 8-Fu

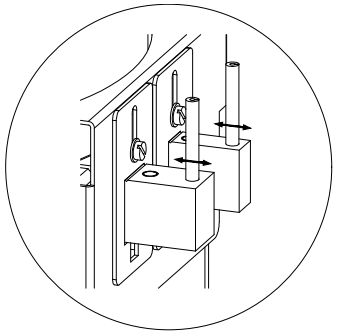

ALGEMEEN PRINCIPE
GENERAL PRINCIPE
GENERAL PRINCIPLE
GENERAL PRINCIPLE
ALLGEMEIN PRINZIP



A

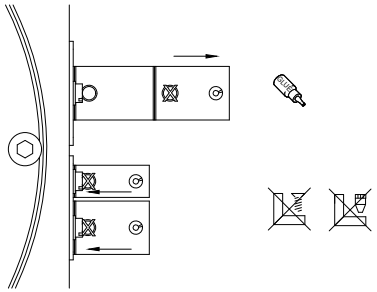



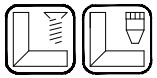

B

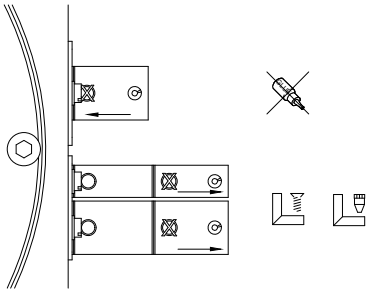



A + B

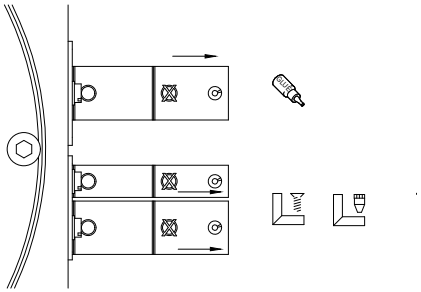

CORNER SCREW MFPT PANEL DOOR

GLUE INJECTION + CORNER CONNECTION 197.D600.00

MASTERLINE 8-Fu

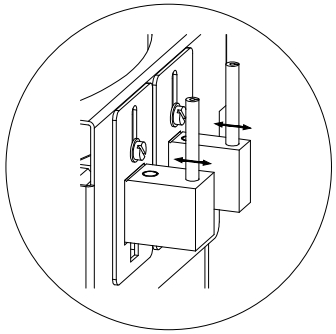

ALGEMEEN PRINCIPE
GENERAL PRINCIPE
GENERAL PRINCIPLE
ALLGEMEIN PRINZIP



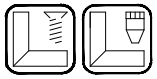



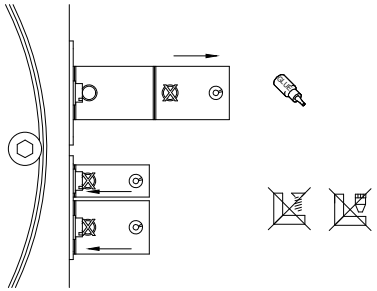

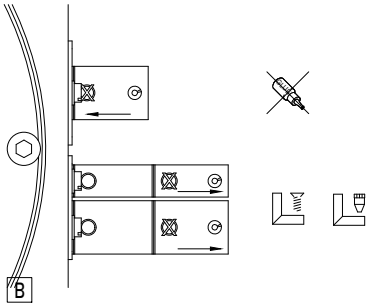

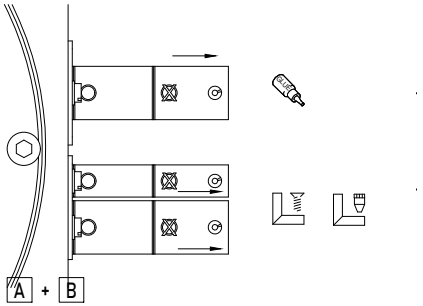



CORNER SCREW MFPT PANEL DOOR

GLUE INJECTION + CORNER CONNECTION 197.D600.00

MASTERLINE 8-Fu

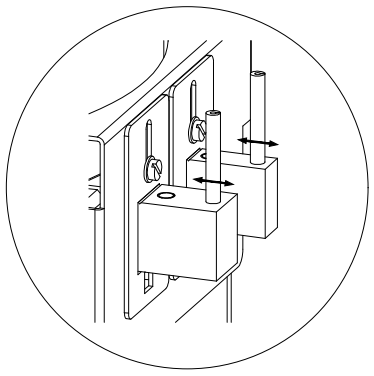

ALGEMEEN PRINCIPE
GENERAL PRINCIPE
GENERAL PRINCIPLE
ALLGEMEIN PRINZIP

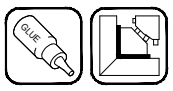

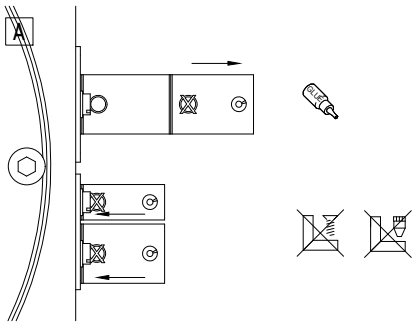



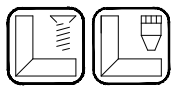

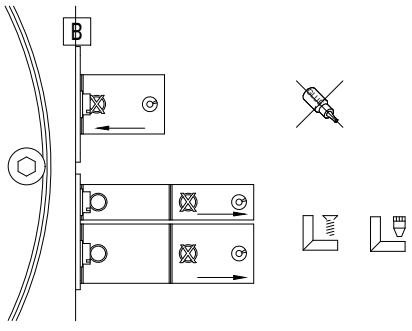



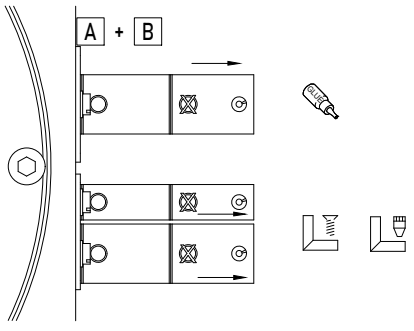

CORNER SCREW MFPT PANEL DOOR

GLUE INJECTION + CORNER CONNECTION 197.D600.00

MASTERLINE 8-Fu

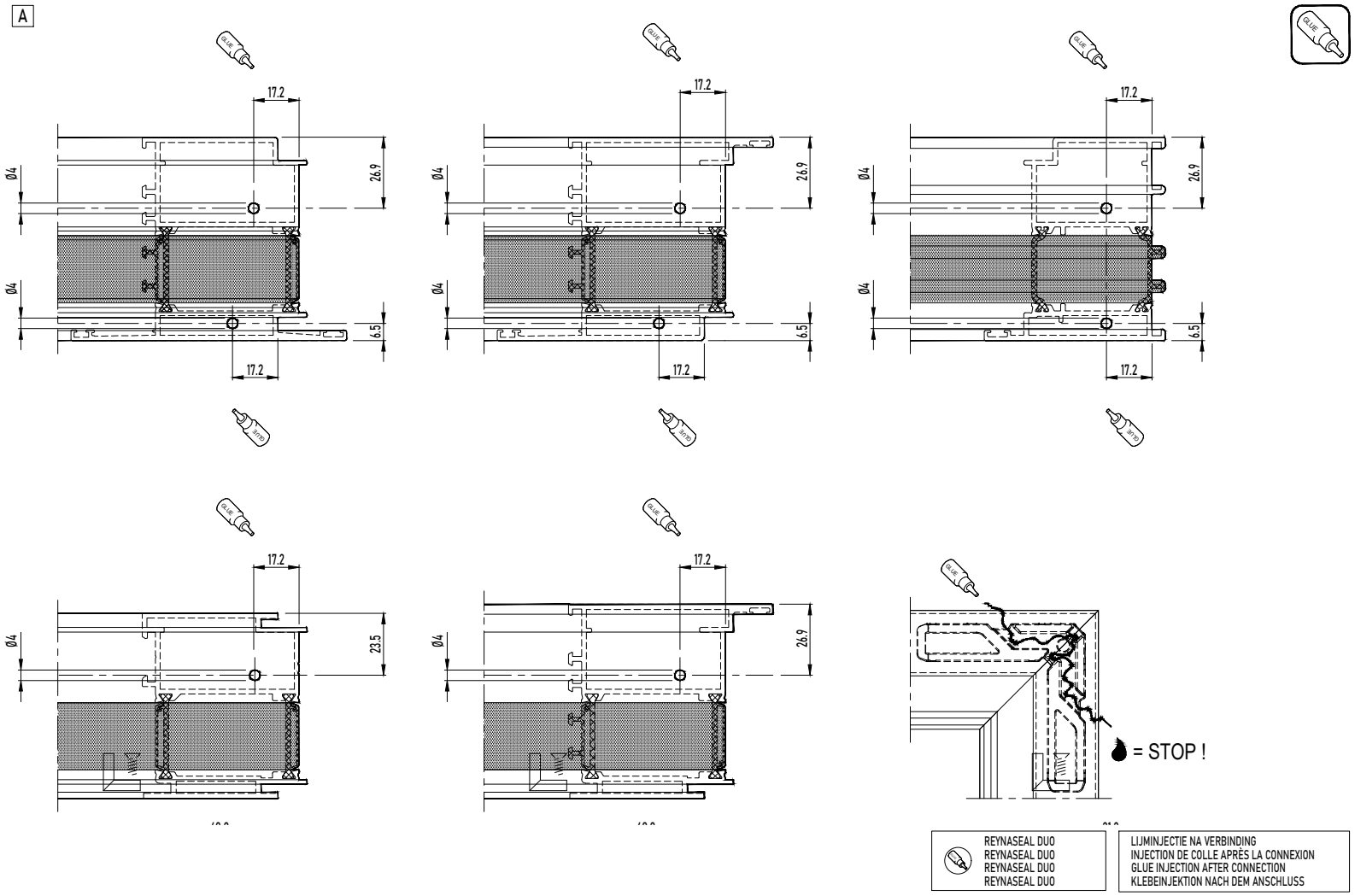

Aanpassing diameter: zie handleiding 197.D600.00 / Modification diamètre: voir manuel 197.D600.00
Change size diameter: see manual 197.D600.00 / Wechsel Durchmesser: siehe Gebrauchsanweisung 197.D600.00

CORNER SCREW MFPT PANEL DOOR

GLUE INJECTION + CORNER CONNECTION 197.D600.00

MASTERLINE 8-Fu

B

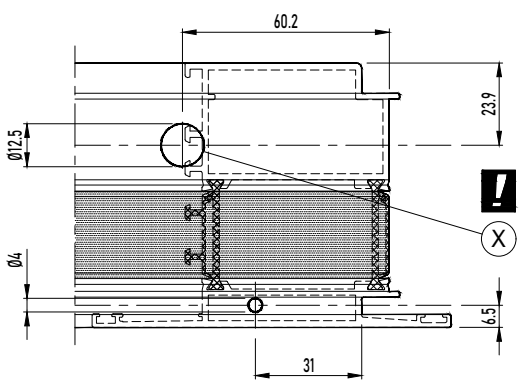

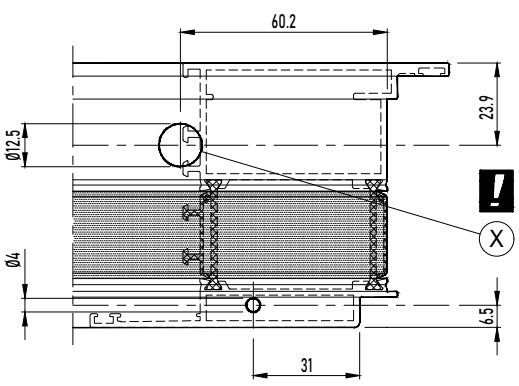

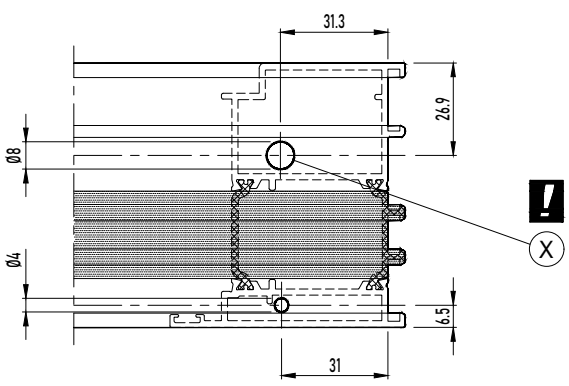

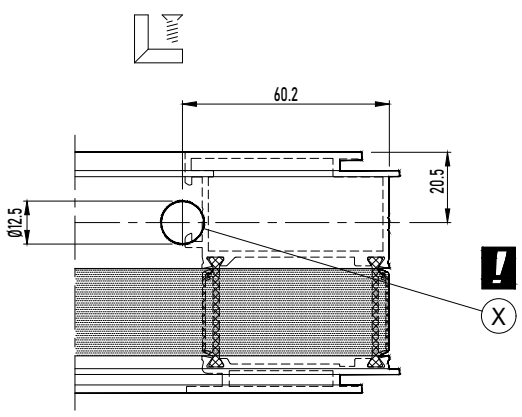

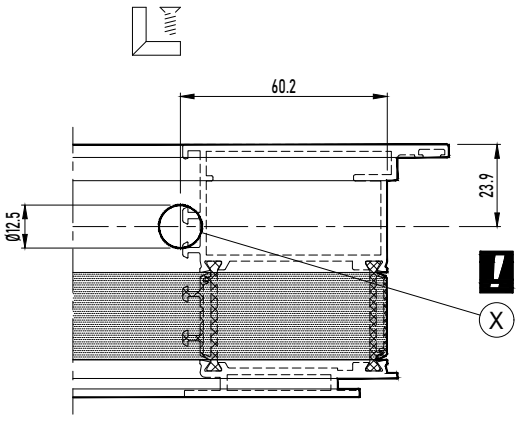

LIJMINJECTIE VOOR VERBINDING
INJECTION DE COLLE AVANT LA CONNEXION
GLUE INJECTION BEFORE CONNECTION
KLEBEINJEKTION VOR ANSCHLUSS

Aanpassing diameter: zie handleiding 197.D600.00 / Modification diamètre: voir manuel 197.D600.00
Change size diameter: see manual 197.D600.00 / Wechsel Durchmesser: siehe Gebrauchsanweisung 197.D600.00

MONTAGEVOLGORDE
L'ORDRE DE MONTAGE
THE ORDER OF ASSEMBLY
MONTAGEREIHENFOLGE
1 2 3 .

X DICHTINGSMIDDEL
MATIERE D'ETANCHEITE
SEALING AGENT
ABDICHTUNG

CORNER SCREW MFPT PANEL DOOR

GLUE INJECTION + CORNER CONNECTION 197.D600.00

MASTERLINE 8-Fu

A + B

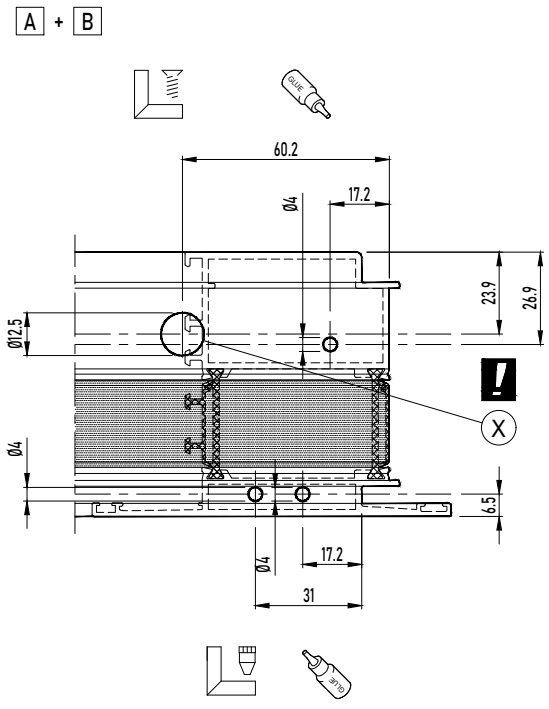

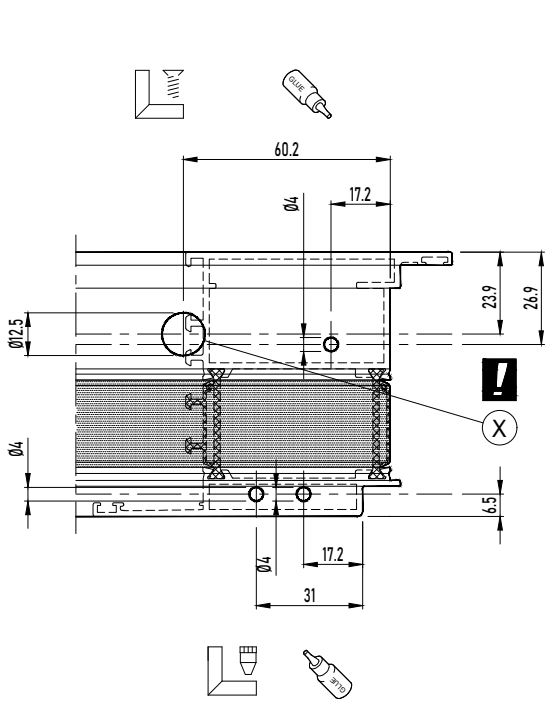

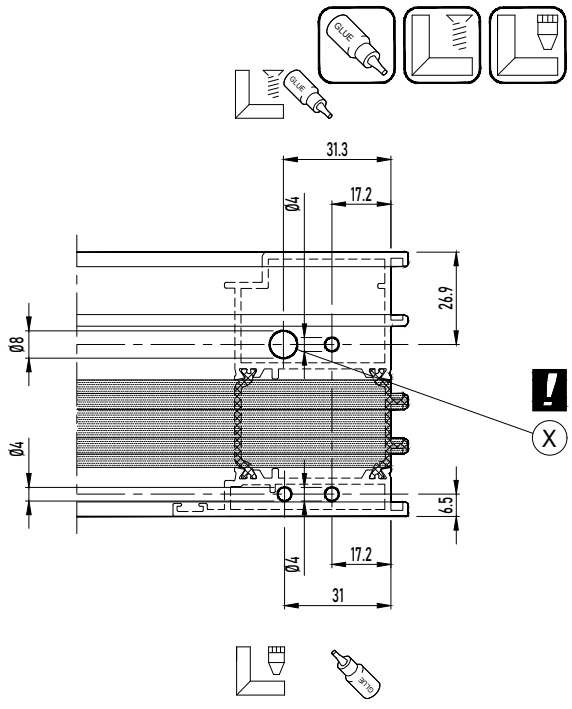

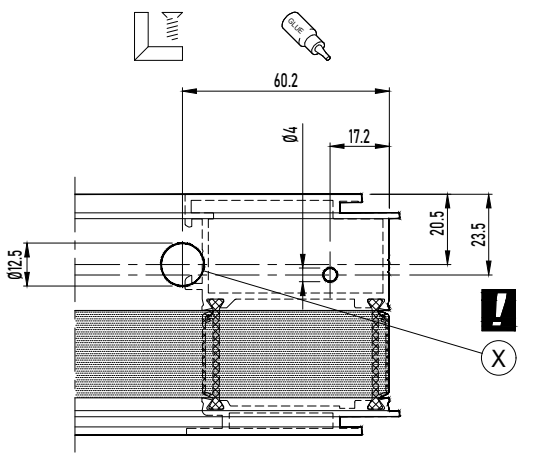

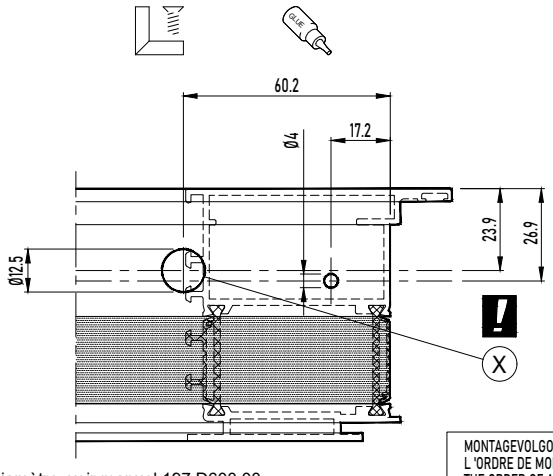

Aanpassing diameter: zie handleiding 197.D600.00 / Modification diamètre: voir manuel 197.D600.00
Change size diameter: see manual 197.D600.00 / Wechsel Durchmesser: siehe Gebrauchsanweisung 197.D600.00

LIJMINJECTIE NA VERBINDING
INJECTION DE COLLE APRÈS LA CONNEXION
GLUE INJECTION AFTER CONNECTION
KLEBEINJEKTION NACH DEM ANSCHLUSS

MONTAGEVOLGORDE
L 'ORDRE DE MONTAGE
THE ORDER OF ASSEMBLY
MONTAGEREIHENFOLGE
1 2 3 .

(X) DICHTINGSMIDDEL
MATIERE D'ETANCHEITE
SEALING AGENT
ABDICHTUNG

CORNER SCREW MFPT PANEL DOOR

SCREW CORNER CONNECTION 097.P300.00 + 097.E700.00

MASTERLINE 8-Fu

X DICHTINGSMIDDEL
MATIERE D'ETANCHEITE
SEALING AGENT
ABDICHTUNG



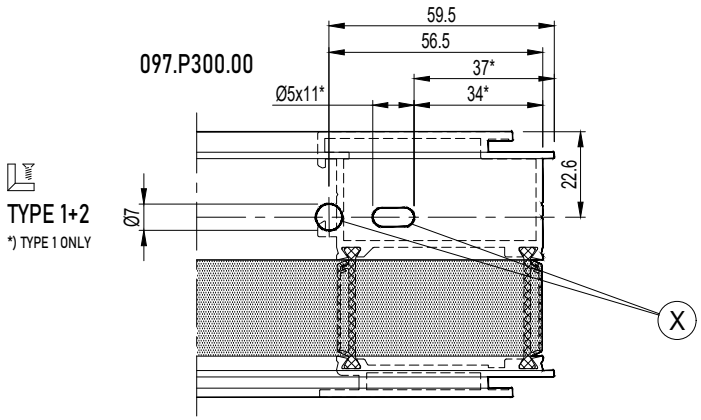

CORNER SCREW MFPT PANEL DOOR

SCREW CORNER CONNECTION 097.P300.00 + 097.E700.00

MASTERLINE 8-Fu

X DICHTINGSMIDDEL
MATIERE D'ETANCHEITE
SEALING AGENT
ABDICHTUNG



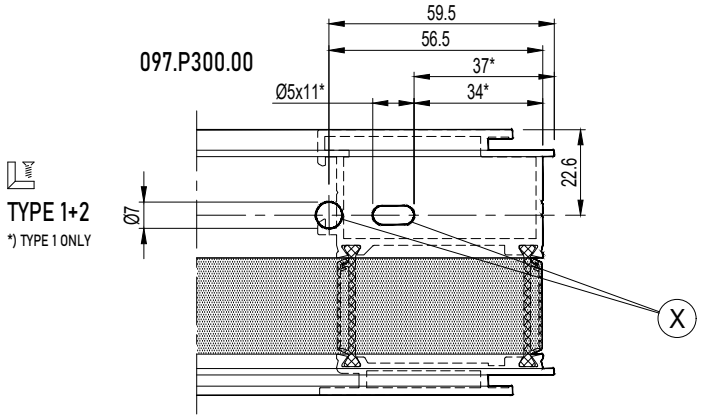

CORNER SCREW JIG PANEL DOOR

GLUE INJECTION + CORNER CONNECTION 197.D600.00

MASTERLINE 8-Fu

169.9496.04 MOETEN SAMEN WORDEN GEÏNSTALLERD MET 068.7798.04 OF 168.7073.00
169.9496.04 DOIT ÊTRE INSTALLÉ ENSEMBLE AVEC 168.7088.00 OU 168.7073.00
169.9496.04 MUST BE INSTALLED TOGETHER WITH 168.7088.00 OR 168.7073.00
169.9496.04 MUSS ZUSAMMEN MIT 168.7088.00 ODER 168.7073.00 INSTALLIERT WERDEN

ENKEL BIJ 408.0094.XX EN 408.0096.XX
SEULEMENT POUR 408.0094.XX ET 408.0096.XX
ONLY FOR 408.0094.XX AND 408.0096.XX
NUR BEI 408.0094.XX UND 408.0096.XX

LIJMINJECTIE NA VERBINDING
INJECTION DE COLLE APRÈS LA CONNEXION
GLUE INJECTION AFTER CONNECTION
KLEBEINJEKTION NACH DEM ANSCHLUSS

X DICHTINGSMIDDEL
MATIERE D'ETANCHEITE
SEALING AGENT
ABDICHTUNG



TYPE 1

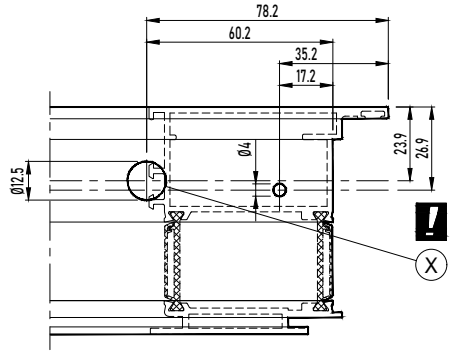

LIJMINJECTIE NA VERBINDING
INJECTION DE COLLE APRÈS LA CONNEXION
GLUE INJECTION AFTER CONNECTION
KLEBEINJEKTION NACH DEM ANSCHLUSS

LIJMINJECTIE VOOR VERBINDING
INJECTION DE COLLE AVANT LA CONNEXION
GLUE INJECTION BEFORE CONNECTION
KLEBEINJEKTION VOR ANSCHLUSS

TYPE 2

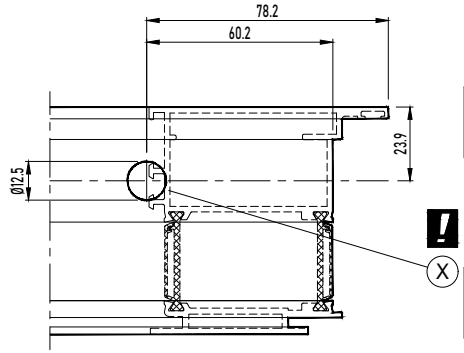

LIJMINJECTIE NA VERBINDING
INJECTION DE COLLE APRÈS LA CONNEXION
GLUE INJECTION AFTER CONNECTION
KLEBEINJEKTION NACH DEM ANSCHLUSS

LIJMINJECTIE VOOR VERBINDING
INJECTION DE COLLE AVANT LA CONNEXION
GLUE INJECTION BEFORE CONNECTION
KLEBEINJEKTION VOR ANSCHLUSS

CORNER SCREW JIG PANEL DOOR

GLUE INJECTION + CORNER CONNECTION 197.D600.00

MASTERLINE 8-Fu

169.9496.04 MOETEN SAMEN WORDEN GEÏNSTALLERD MET 068.7798.04 OF 168.7073.00
169.9496.04 DOIT ÊTRE INSTALLÉ ENSEMBLE AVEC 168.7088.00 OU 168.7073.00
169.9496.04 MUST BE INSTALLED TOGETHER WITH 168.7088.00 OR 168.7073.00
169.9496.04 MUSS ZUSAMMEN MIT 168.7088.00 ODER 168.7073.00 INSTALLIERT WERDEN

ENKEL BIJ 408.0094.XX EN 408.0096.XX
SEULEMENT POUR 408.0094.XX ET 408.0096.XX
ONLY FOR 408.0094.XX AND 408.0096.XX
NUR BEI 408.0094.XX UND 408.0096.XX

LIJMINJECTIE NA VERBINDING
INJECTION DE COLLE APRÈS LA CONNEXION
GLUE INJECTION AFTER CONNECTION
KLEBEINJEKTION NACH DEM ANSCHLUSS

X DICHTINGSMIDDEL
MATIERE D'ETANCHEITE
SEALING AGENT
ABDICHTUNG



TYPE 1

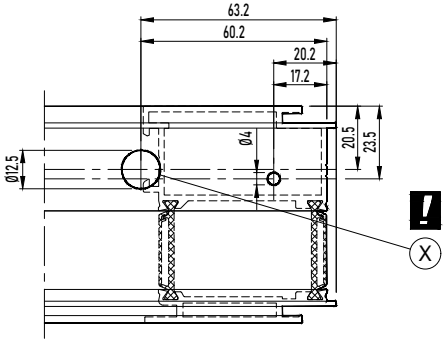

LIJMINJECTIE NA VERBINDING
INJECTION DE COLLE APRÈS LA CONNEXION
GLUE INJECTION AFTER CONNECTION
KLEBEINJEKTION NACH DEM ANSCHLUSS

LIJMINJECTIE VOOR VERBINDING
INJECTION DE COLLE AVANT LA CONNEXION
GLUE INJECTION BEFORE CONNECTION
KLEBEINJEKTION VOR ANSCHLUSS

TYPE 2

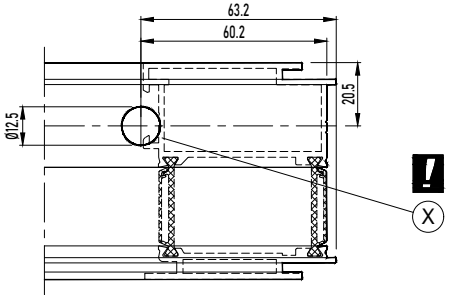

LIJMINJECTIE NA VERBINDING
INJECTION DE COLLE APRÈS LA CONNEXION
GLUE INJECTION AFTER CONNECTION
KLEBEINJEKTION NACH DEM ANSCHLUSS

LIJMINJECTIE VOOR VERBINDING
INJECTION DE COLLE AVANT LA CONNEXION
GLUE INJECTION BEFORE CONNECTION
KLEBEINJEKTION VOR ANSCHLUSS

CORNER SCREW JIG PANEL DOOR

GLUE INJECTION + CORNER CONNECTION 197.D600.00

MASTERLINE 8-Fu

169.9496.04 MOETEN SAMEN WORDEN GEÏNSTALLERD MET 068.7798.04 OF 168.7073.00
169.9496.04 DOIT ÊTRE INSTALLÉ ENSEMBLE AVEC 168.7088.00 OU 168.7073.00
169.9496.04 MUST BE INSTALLED TOGETHER WITH 168.7088.00 OR 168.7073.00
169.9496.04 MUSS ZUSAMMEN MIT 168.7088.00 ODER 168.7073.00 INSTALLIERT WERDEN

ENKEL BIJ 408.0094.XX EN 408.0096.XX
SEULEMENT POUR 408.0094.XX ET 408.0096.XX
ONLY FOR 408.0094.XX AND 408.0096.XX
NUR BEI 408.0094.XX UND 408.0096.XX

LIJMINJECTIE NA VERBINDING
INJECTION DE COLLE APRÈS LA CONNEXION
GLUE INJECTION AFTER CONNECTION
KLEBEINJEKTION NACH DEM ANSCHLUSS

X DICHTINGSMIDDEL
MATIERE D'ETANCHEITE
SEALING AGENT
ABDICHTUNG



TYPE 1

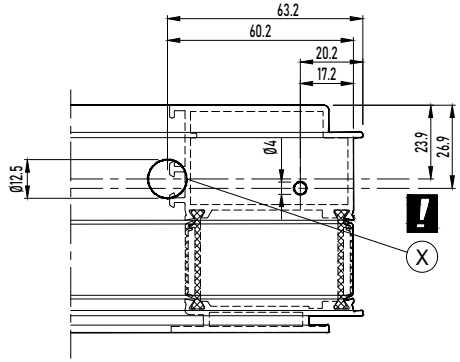

LIJMINJECTIE NA VERBINDING
INJECTION DE COLLE APRÈS LA CONNEXION
GLUE INJECTION AFTER CONNECTION
KLEBEINJEKTION NACH DEM ANSCHLUSS

LIJMINJECTIE VOOR VERBINDING
INJECTION DE COLLE AVANT LA CONNEXION
GLUE INJECTION BEFORE CONNECTION
KLEBEINJEKTION VOR ANSCHLUSS

TYPE 2

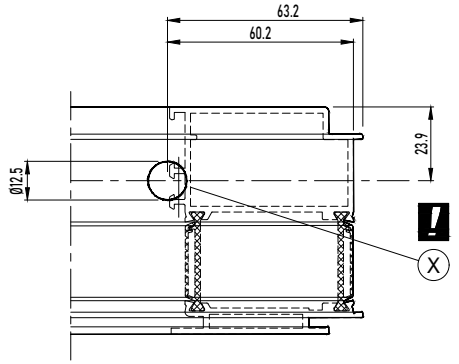

LIJMINJECTIE NA VERBINDING
INJECTION DE COLLE APRÈS LA CONNEXION
GLUE INJECTION AFTER CONNECTION
KLEBEINJEKTION NACH DEM ANSCHLUSS

LIJMINJECTIE VOOR VERBINDING
INJECTION DE COLLE AVANT LA CONNEXION
GLUE INJECTION BEFORE CONNECTION
KLEBEINJEKTION VOR ANSCHLUSS

GLUE MC

GLUE INJECTION 097.P400.00 + 097.E700.00

MASTERLINE 8-Fu

097.E700.00 --> VERGROOT DE DIAMETER NAAR 4MM
097.E700.00 --> AUGMENTER LE DIAMETRE A 4MM
097.E700.00 --> INCREASE THE DIAMETER TO 4MM
097.E700.00 --> ERHÖHEN SIE DEN DURCHMESSER AUF 4MM



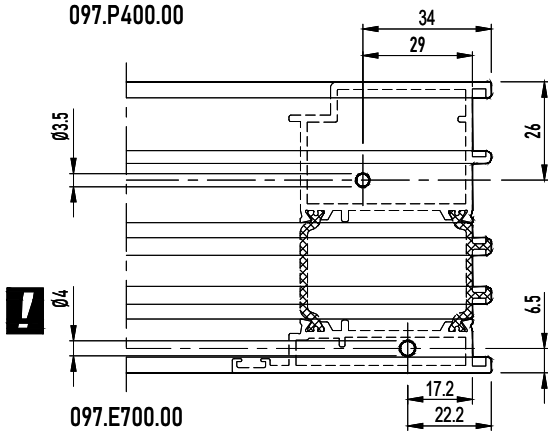

GLUE MC

GLUE INJECTION 097.P400.00 + 097.E700.00

MASTERLINE 8-Fu

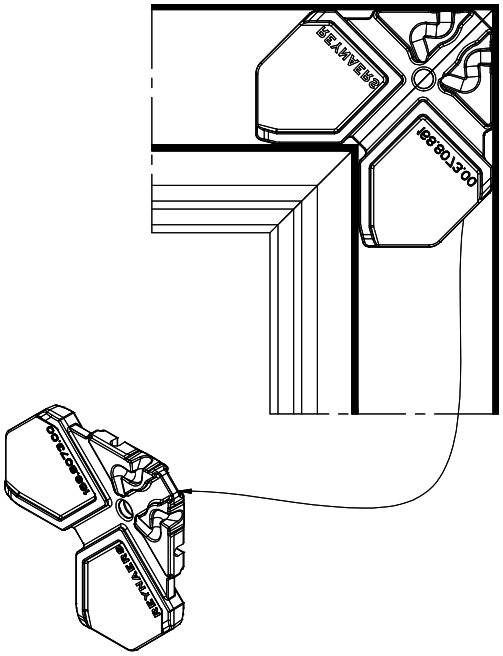

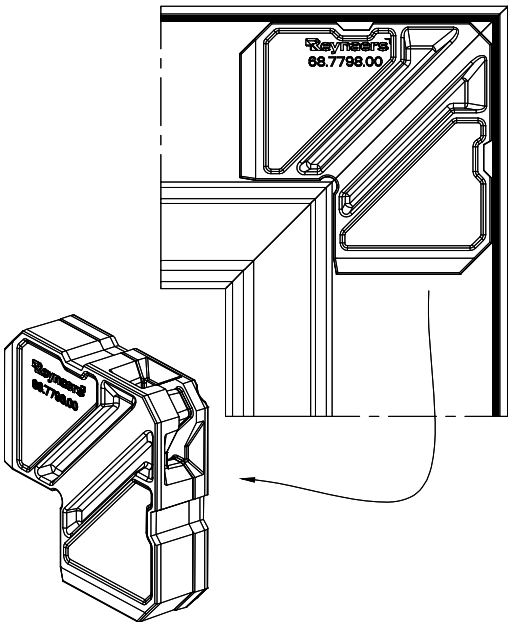

GLUE MC

GLUE INJECTION 097.P400.00 + 097.E700.00

MASTERLINE 8-Fu

097.E700.00 --> VERGROOT DE DIAMETER NAAR 4MM
097.E700.00 --> AUGMENTER LE DIAMETRE A 4MM
097.E700.00 --> INCREASE THE DIAMETER TO 4MM
097.E700.00 --> ERHÖHEN SIE DEN DURCHMESSER AUF 4MM



LIJMINJECTIE NA VERBINDING
INJECTION DE COLLE APRÈS LA CONNEXION
GLUE INJECTION AFTER CONNECTION
KLEBEINJEKTION NACH DEM ANSCHLUSS

097.P400.00

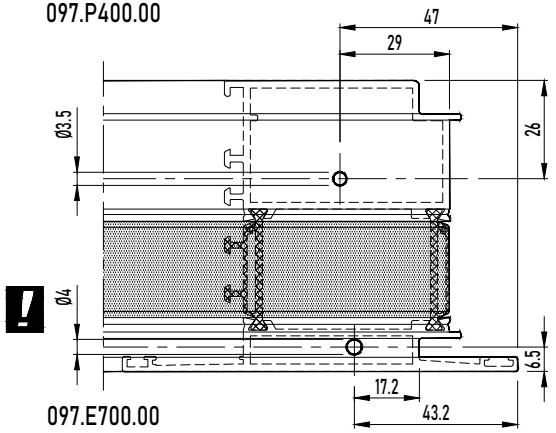

097.E700.00

GLUE MC

GLUE INJECTION 097.P400.00 + 097.E700.00

MASTERLINE 8-Fu

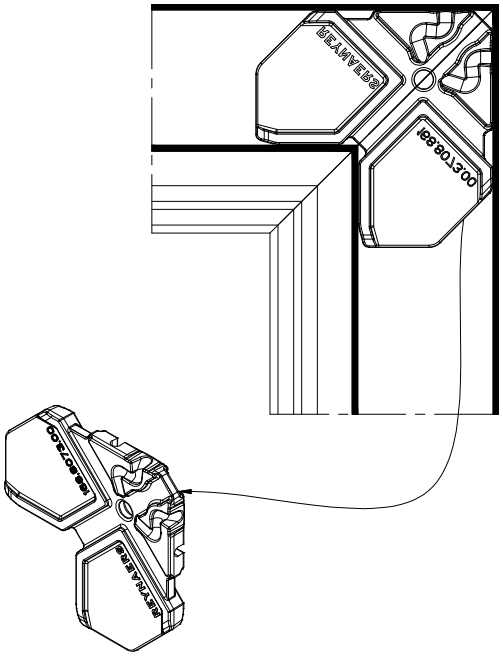

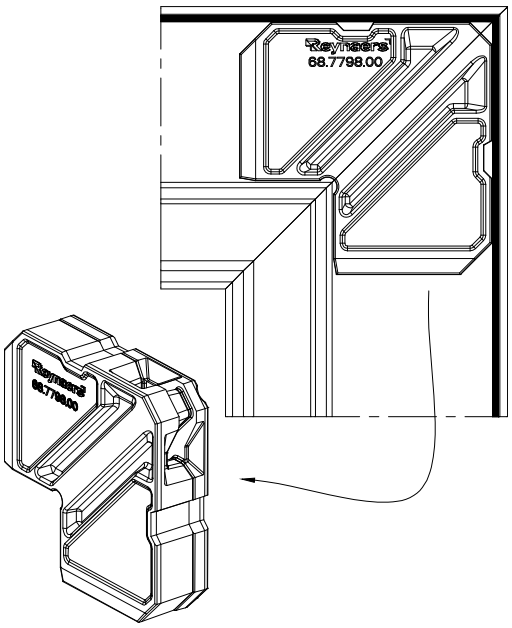

GLUE MC

GLUE INJECTION 097.P400.00 + 097.E700.00

MASTERLINE 8-Fu



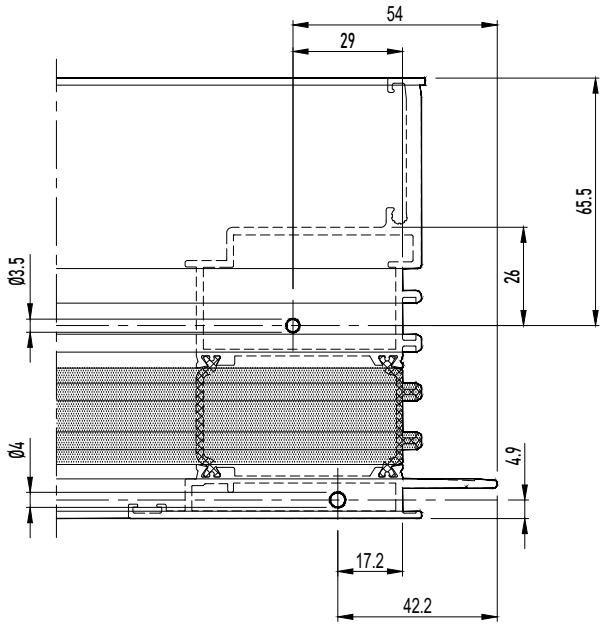

GLUE MFPT

GLUE INJECTION 097.P400.00 + 097.E700.00

MASTERLINE 8-Fu

097.E700.00 --> VERGROOT DE DIAMETER NAAR 4MM
097.E700.00 --> AUGMENTER LE DIAMETRE A 4MM
097.E700.00 --> INCREASE THE DIAMETER TO 4MM
097.E700.00 --> ERHÖHEN SIE DEN DURCHMESSER AUF 4MM



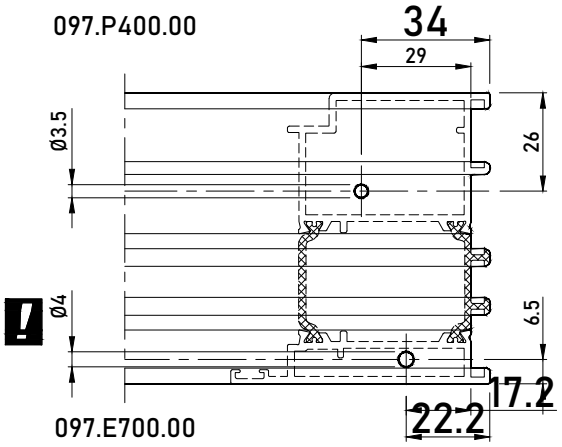

GLUE MFPT

GLUE INJECTION 097.P400.00 + 097.E700.00

MASTERLINE 8-Fu

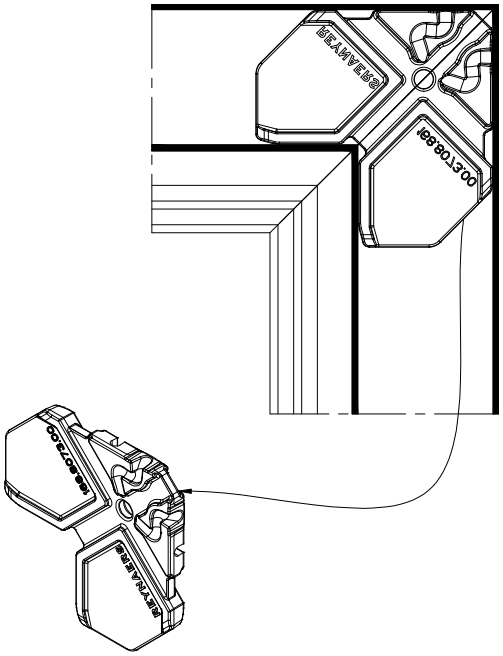

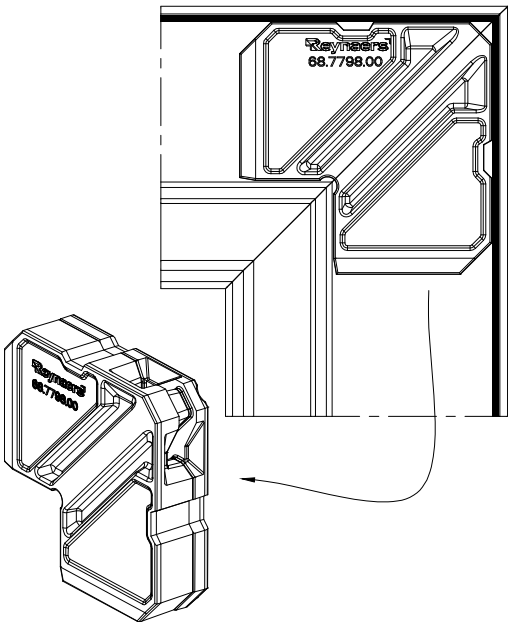

GLUE MFPT

GLUE INJECTION 097.P400.00 + 097.E700.00

MASTERLINE 8-Fu

097.E700.00 --> VERGROOT DE DIAMETER NAAR 4MM
097.E700.00 --> AUGMENTER LE DIAMETRE A 4MM
097.E700.00 --> INCREASE THE DIAMETER TO 4MM
097.E700.00 --> ERHÖHEN SIE DEN DURCHMESSER AUF 4MM



LIJMINJECTIE NA VERBINDING
INJECTION DE COLLE APRÈS LA CONNEXION
GLUE INJECTION AFTER CONNECTION
KLEBEINJEKTION NACH DEM ANSCHLUSS

097.P400.00

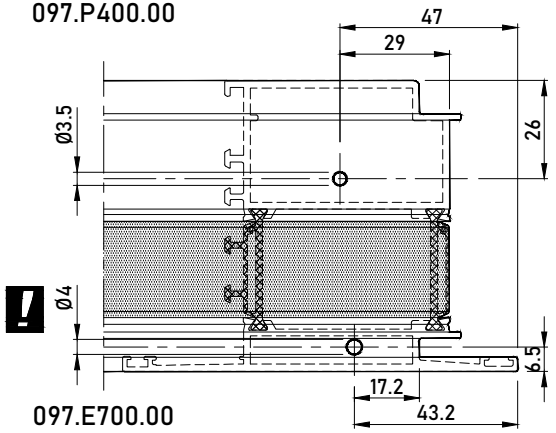

097.E700.00

GLUE MFPT

GLUE INJECTION 097.P400.00 + 097.E700.00

MASTERLINE 8-Fu

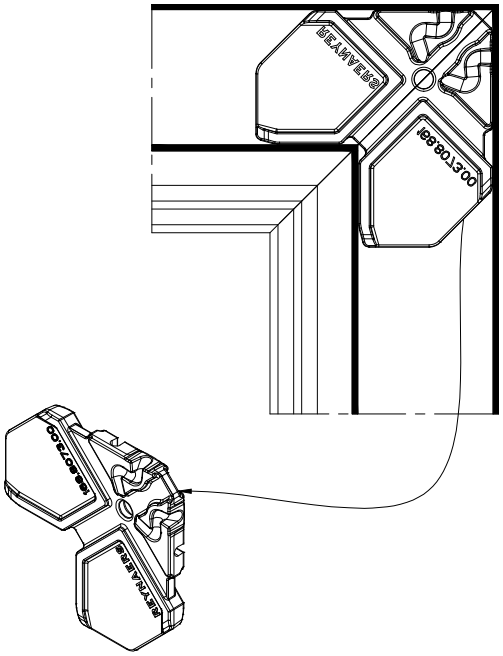

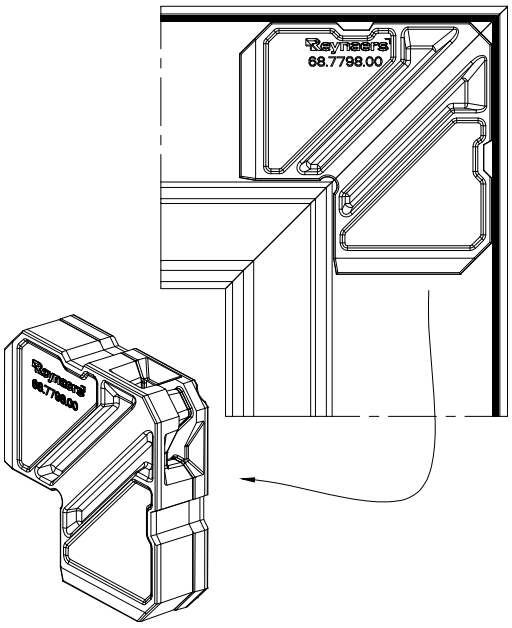

GLUE MFPT

GLUE INJECTION 097.P400.00 + 097.E700.00

MASTERLINE 8-Fu

097.E700.00 --> VERGROOT DE DIAMETER NAAR 4MM
097.E700.00 --> AUGMENTER LE DIAMETRE A 4MM
097.E700.00 --> INCREASE THE DIAMETER TO 4MM
097.E700.00 --> ERHÖHEN SIE DEN DURCHMESSER AUF 4MM



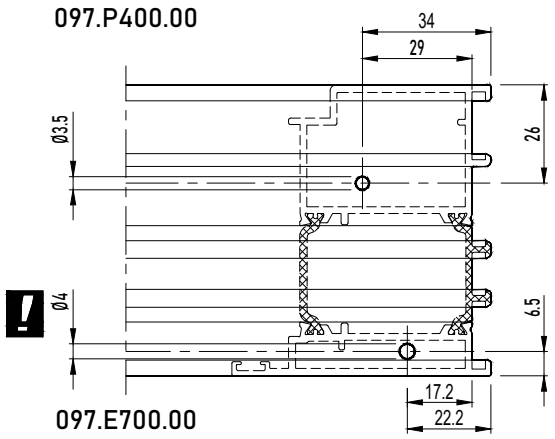

GLUE MFPT

GLUE INJECTION 097.P400.00 + 097.E700.00

MASTERLINE 8-Fu

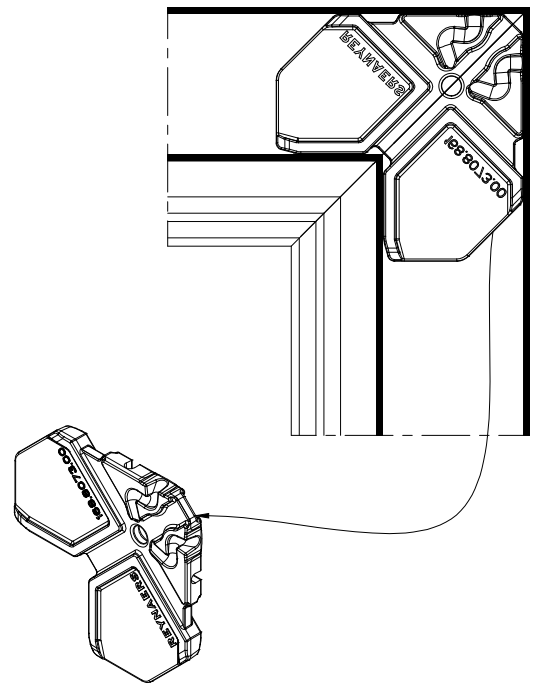

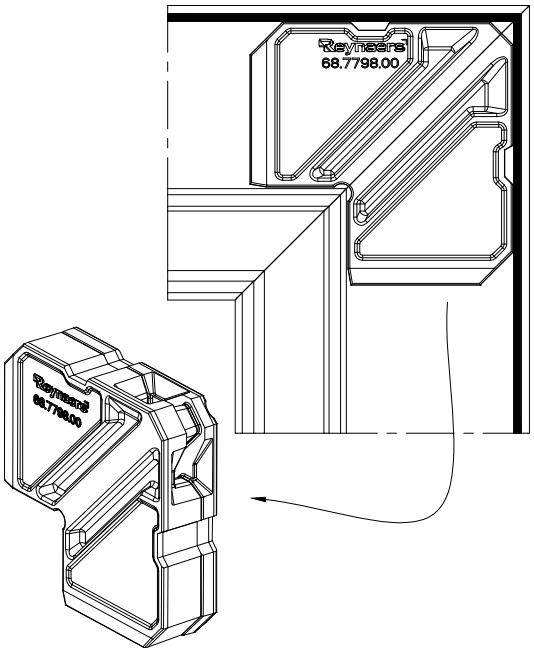

GLUE MFPT

GLUE INJECTION 097.P400.00 + 097.E700.00

MASTERLINE 8-Fu

097.E700.00 --> VERGROOT DE DIAMETER NAAR 4MM
097.E700.00 --> AUGMENTER LE DIAMETRE A 4MM
097.E700.00 --> INCREASE THE DIAMETER TO 4MM
097.E700.00 --> ERHÖHEN SIE DEN DURCHMESSER AUF 4MM



LIJMINJECTIE NA VERBINDING
INJECTION DE COLLE APRÈS LA CONNEXION
GLUE INJECTION AFTER CONNECTION
KLEBEINJEKTION NACH DEM ANSCHLUSS

097.P400.00

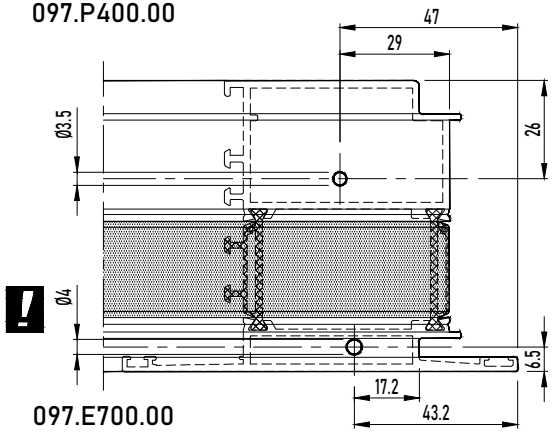

097.E700.00

GLUE MFPT

GLUE INJECTION 097.P400.00 + 097.E700.00

MASTERLINE 8-Fu

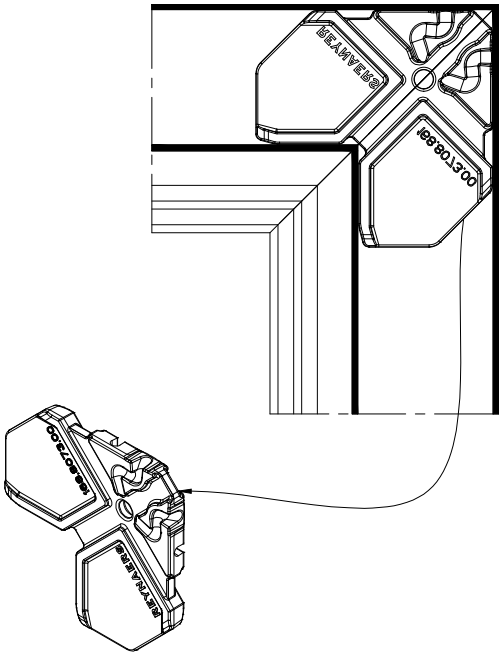

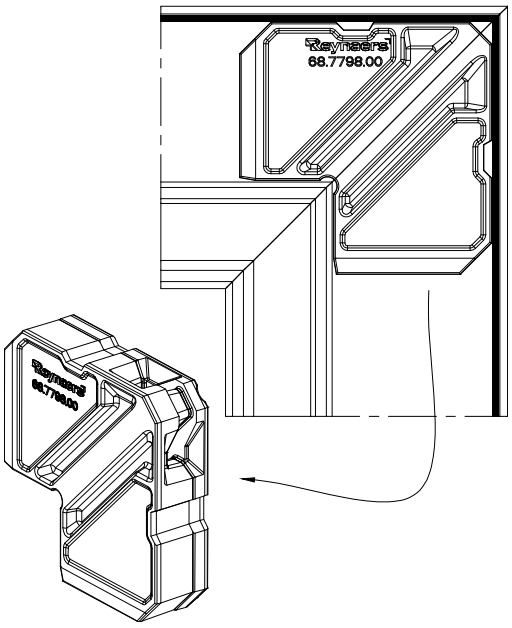

GLUE MC PANEL DOOR

GLUE INJECTION 097.P400.00 + 097.E700.00

MASTERLINE 8-Fu



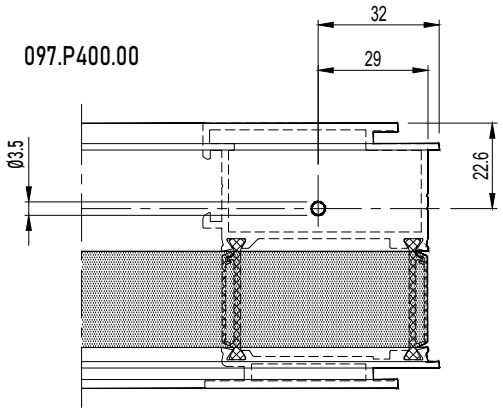

LIJMINJECTIE NA VERBINDING
INJECTION DE COLLE APRÈS LA CONNEXION
GLUE INJECTION AFTER CONNECTION
KLEBEINJEKTION NACH DEM ANSCHLUSS

LIJMINJECTIE VOOR VERBINDING
INJECTION DE COLLE AVANT LA CONNEXION
GLUE INJECTION BEFORE CONNECTION
KLEBEINJEKTION VOR ANSCHLUSS

GLUE MFPT PANEL DOOR

GLUE INJECTION 097.P400.00 + 097.E700.00

MASTERLINE 8-Fu



097.P400.00

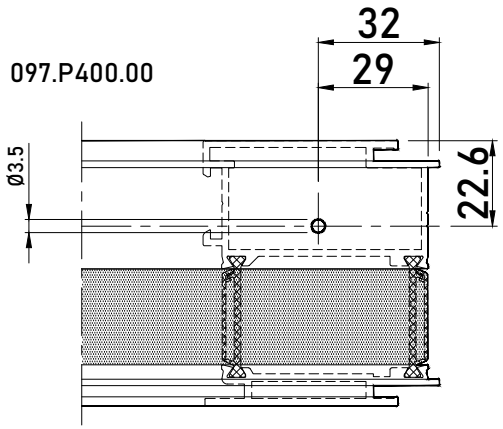

LIJMINJECTIE NA VERBINDING
INJECTION DE COLLE APRÈS LA CONNEXION
GLUE INJECTION AFTER CONNECTION
KLEBEINJEKTION NACH DEM ANSCHLUSS

LIJMINJECTIE VOOR VERBINDING
INJECTION DE COLLE AVANT LA CONNEXION
GLUE INJECTION BEFORE CONNECTION
KLEBEINJEKTION VOR ANSCHLUSS

GLUE MFPT PANEL DOOR

GLUE INJECTION 097.P400.00 + 097.E700.00

MASTERLINE 8-Fu

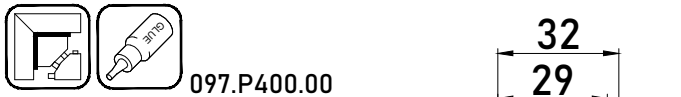

097.P400.00

LIJMINJECTIE NA VERBINDING
INJECTION DE COLLE APRÈS LA CONNEXION
GLUE INJECTION AFTER CONNECTION
KLEBEINJEKTION NACH DEM ANSCHLUSS

LIJMINJECTIE VOOR VERBINDING
INJECTION DE COLLE AVANT LA CONNEXION
GLUE INJECTION BEFORE CONNECTION
KLEBEINJEKTION VOR ANSCHLUSS

DECOMPRESSION DOOR

DECOMPRESSION

MASTERLINE 8-Fu

DECOMPRESSIE BUITENKADER - DEUR MET DUBBELE AANSLAGDICHTING
DECOMPRESSION DORMANT - PORTE AVEC DOUBLE JOINT DE BUTEE
DECOMPRESSION OUTER FRAME - DOOR WITH DOUBLE WEATHER STRIP
DEKOMPRESSION BLENDRAHMEN - TUER MIT DOPPELANSCHLAGDICHTUNG

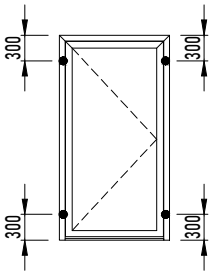

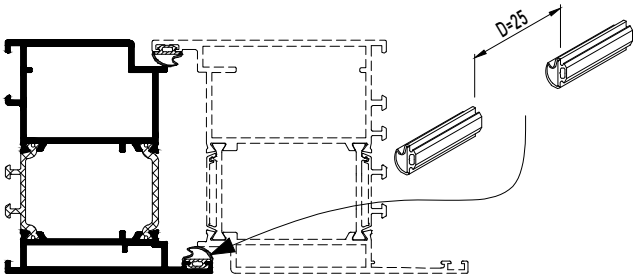

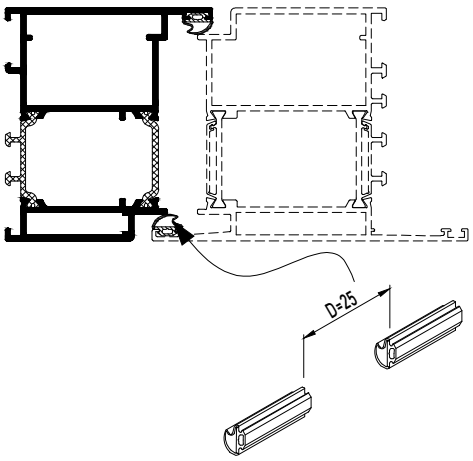

DECOMPRESSIE VLEUGEL
DECOMPRESSION OUVRANT
DECOMPRESSION VENT
DEKOMPRESSION FLEUGEL

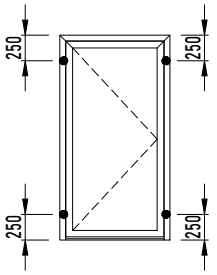

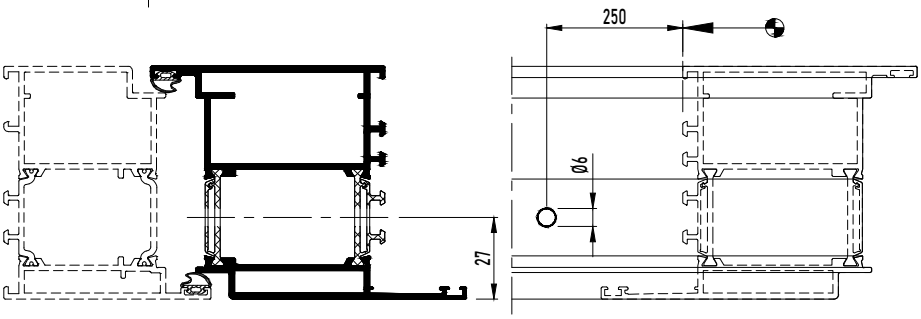

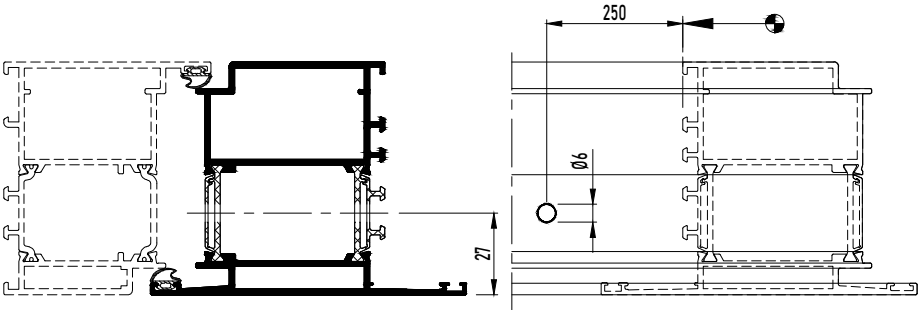

ASSEMBLY END PIECE Z-T DOOR

END PIECES Z-T DOOR

MASTERLINE 8-Fu

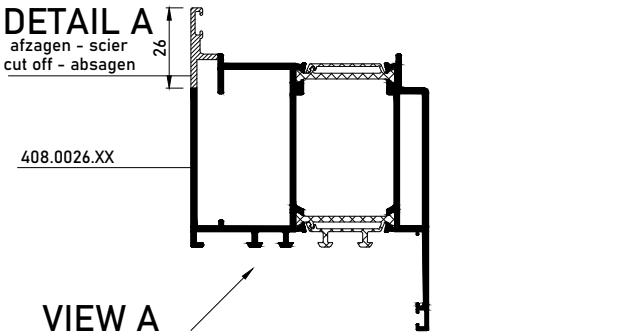

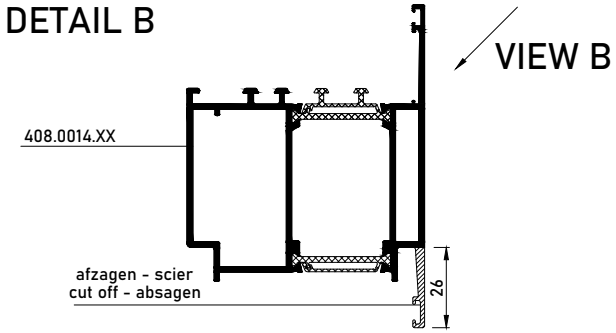

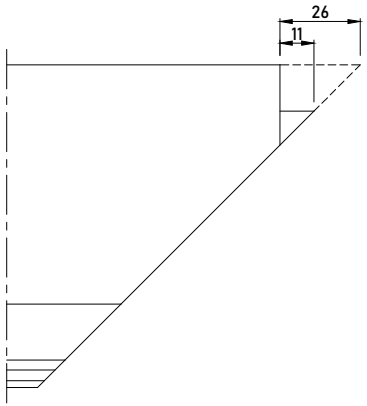

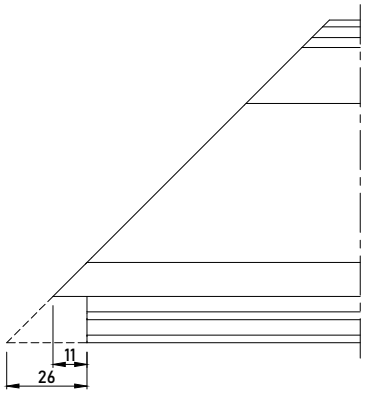

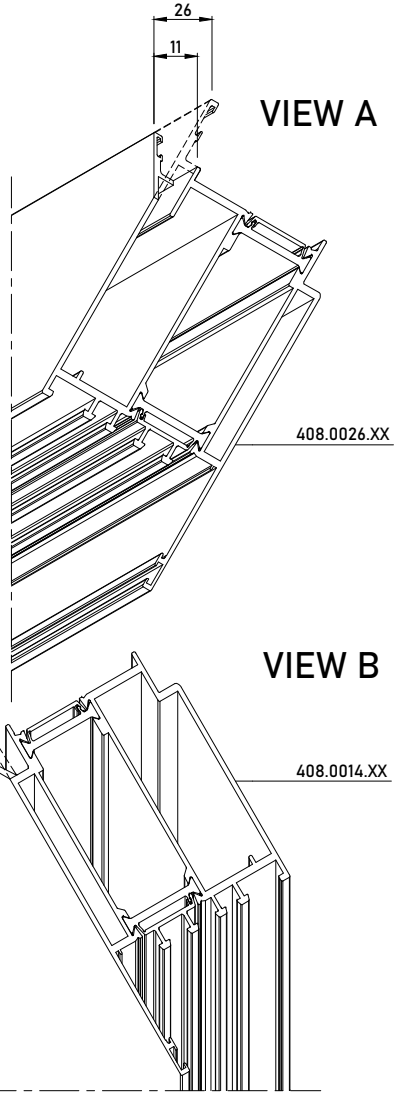

MONTAGEVOLGORDE L 'ORDRE DE MONTAGE THE ORDER OF ASSEMBLY MONTAGEREIHENFOLGE	1	2	3	.

ASSEMBLY END PIECE Z-T DOOR

END PIECES Z-T DOOR

MASTERLINE 8-Fu

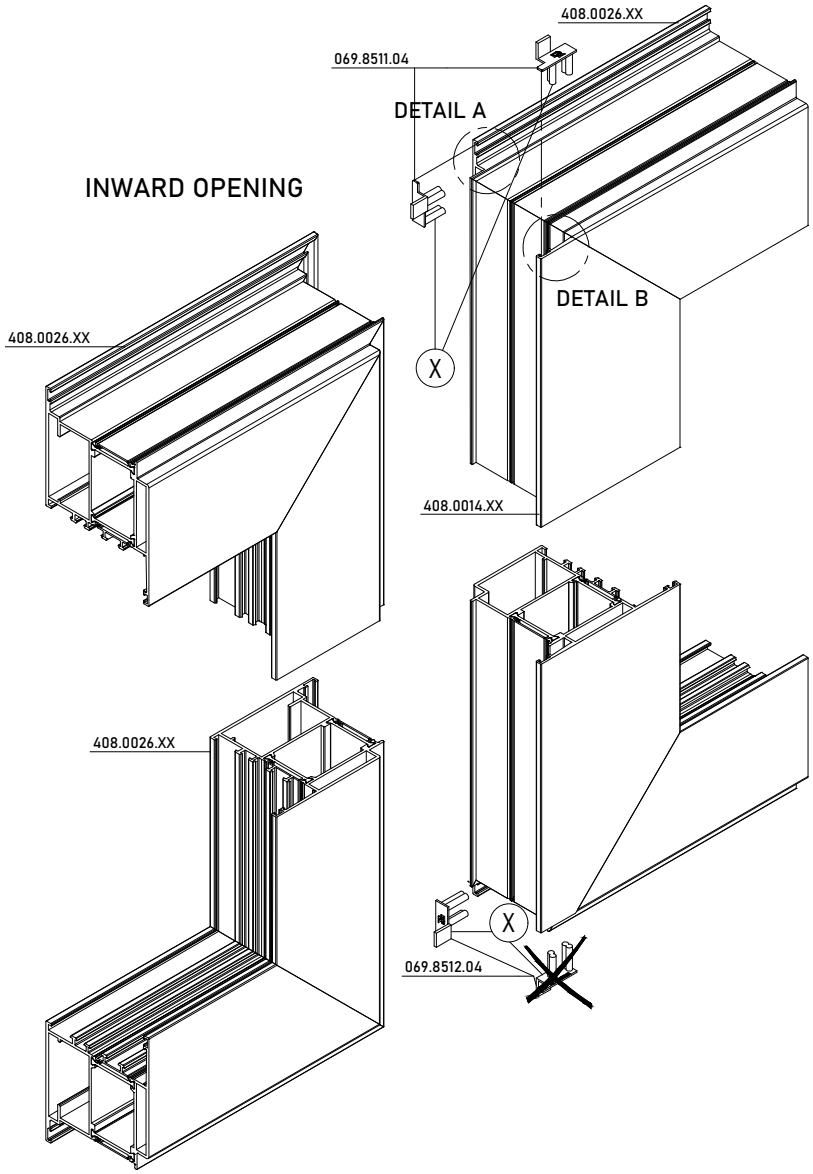

ASSEMBLY END PIECE Z-T DOOR

END PIECES Z-T DOOR

MASTERLINE 8-Fu

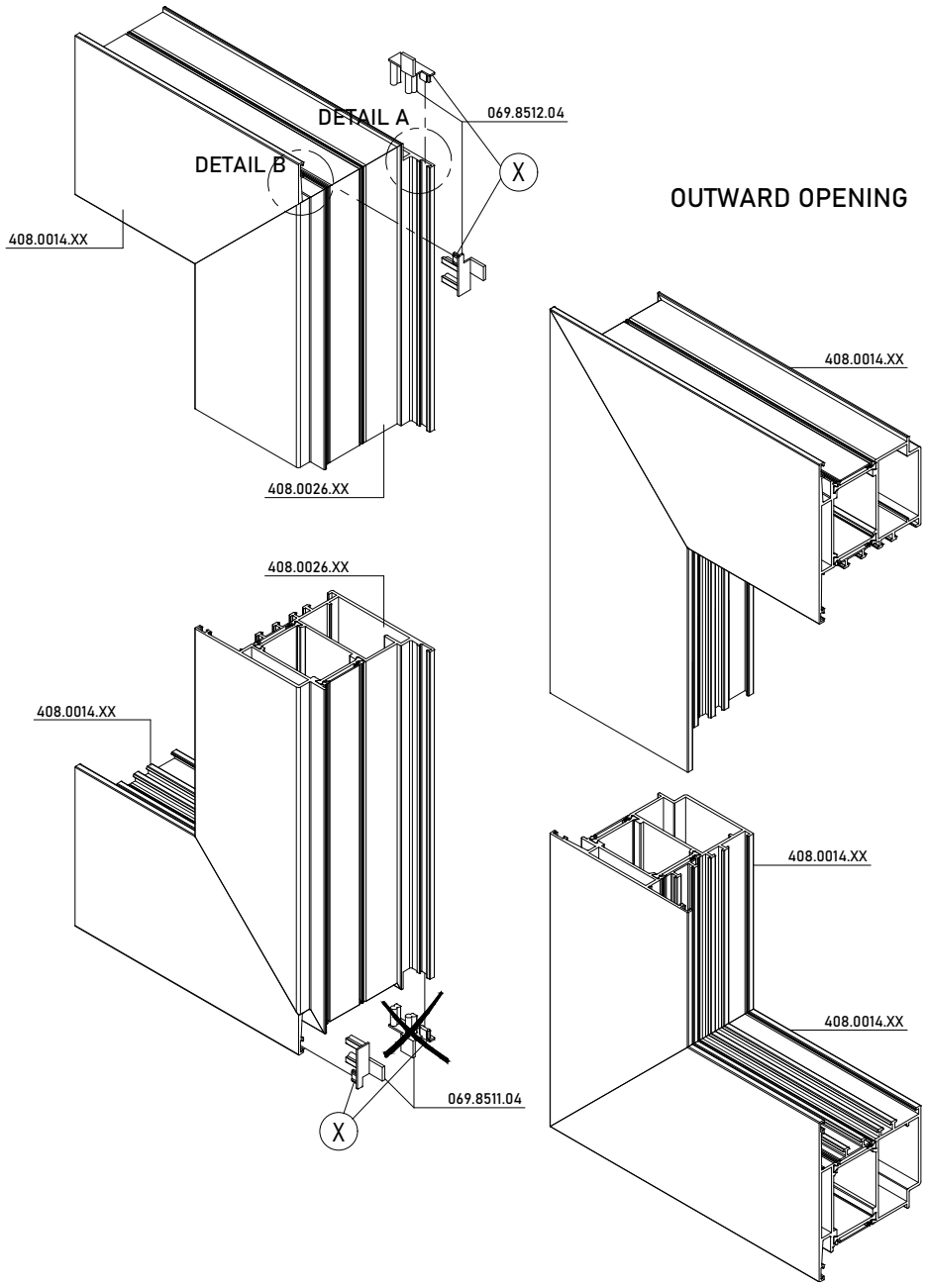

ASSEMBLY END PIECE Z-T DOOR

END PIECES Z-T DOOR

MASTERLINE 8-Fu

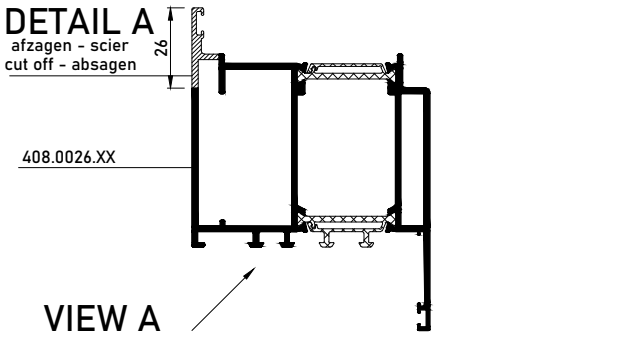

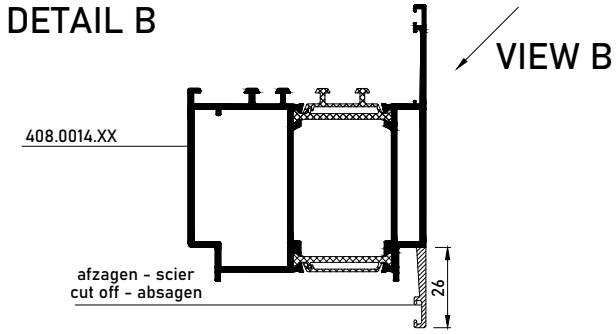

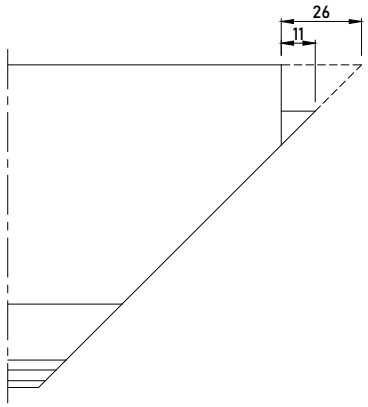

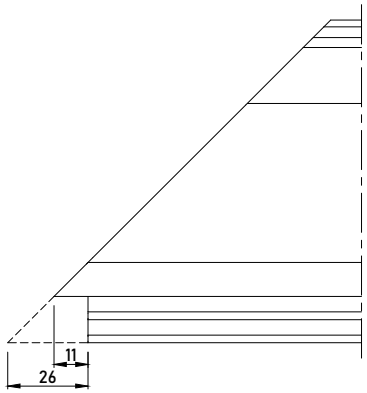

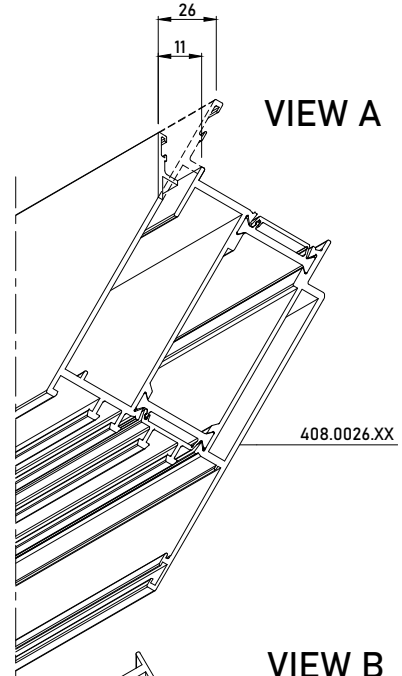

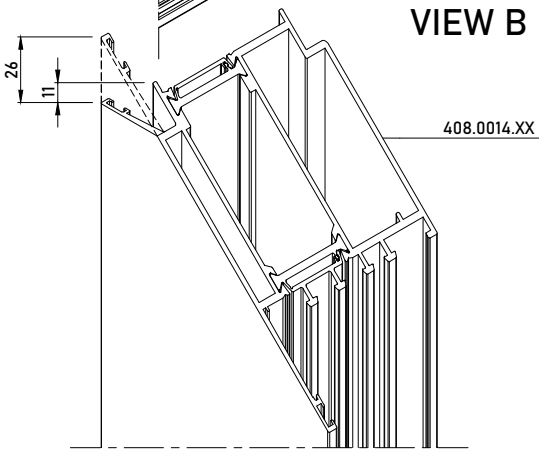

MONTAGEVOLGORDE L 'ORDRE DE MONTAGE THE ORDER OF ASSEMBLY MONTAGEREIHENFOLGE	1 2 3 .

ASSEMBLY END PIECE Z-T DOOR

END PIECES Z-T DOOR

MASTERLINE 8-Fu

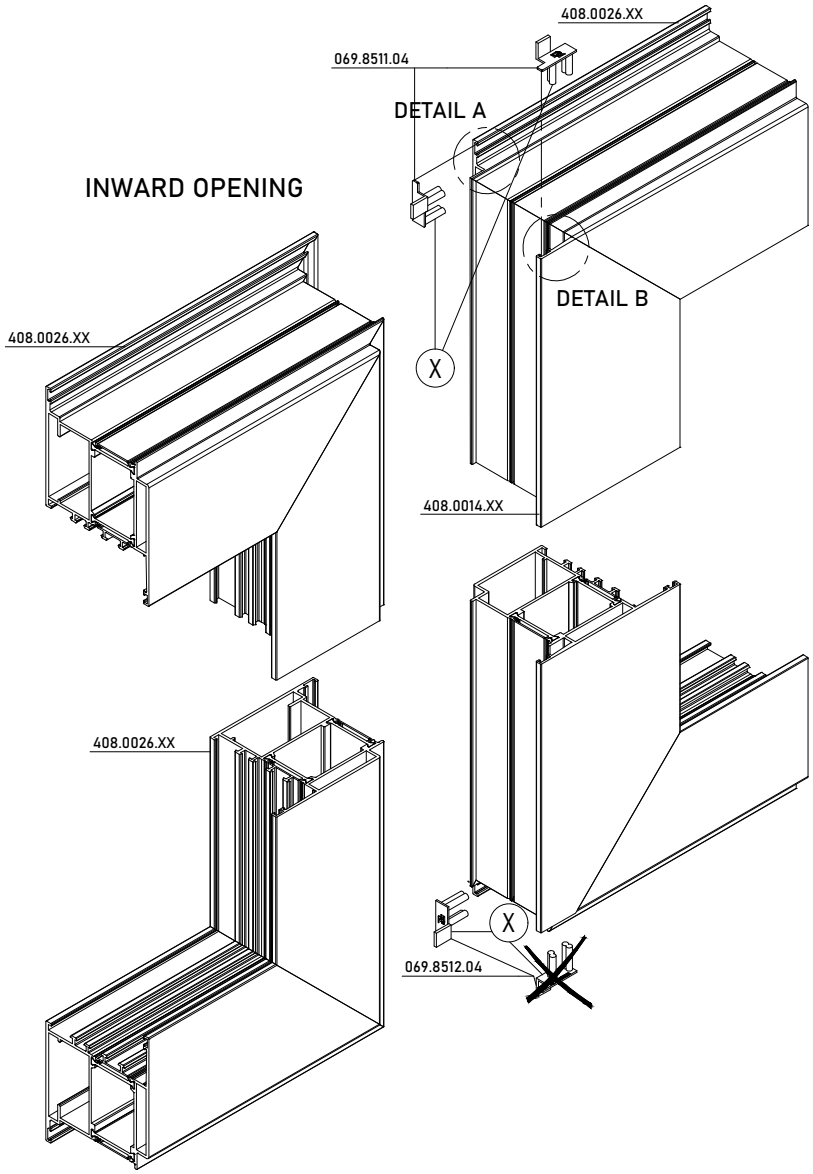

ASSEMBLY END PIECE Z-T DOOR

END PIECES Z-T DOOR

MASTERLINE 8-Fu

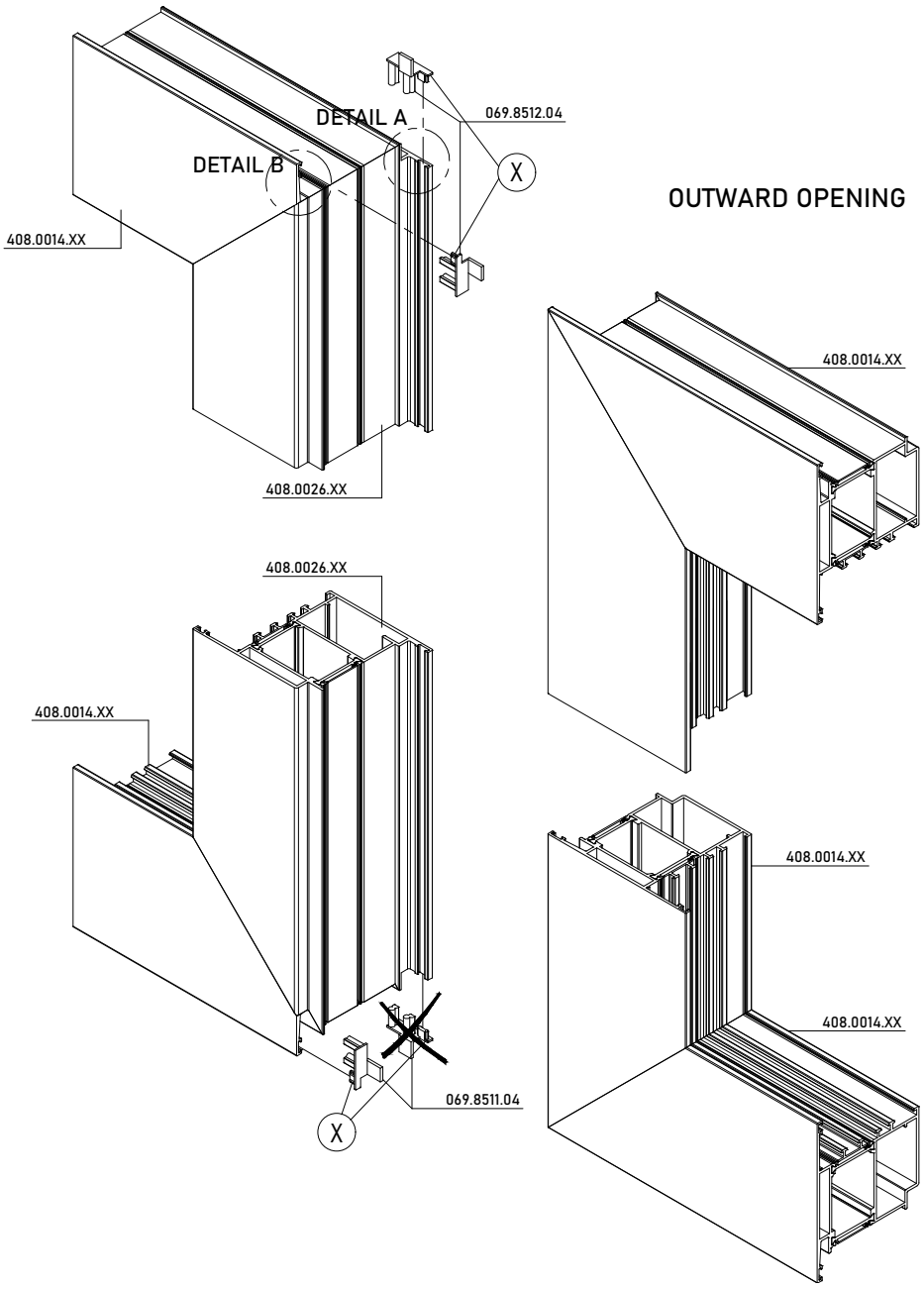

DOUBLE CASEMENT DOOR BRUSH

ASSEMBLY DOUBLE CASEMENT PROFILE INWARD OPENING

MASTERLINE 8-Fu

X DICHTINGSMIDDEL
MATIERE D'ETANCHEITE
SEALING AGENT
ABDICHTUNG

MONTAGEVOLGORDE
L 'ORDRE DE MONTAGE
THE ORDER OF ASSEMBLY
MONTAGEREIHENFOLGE 1 2 3 .

1

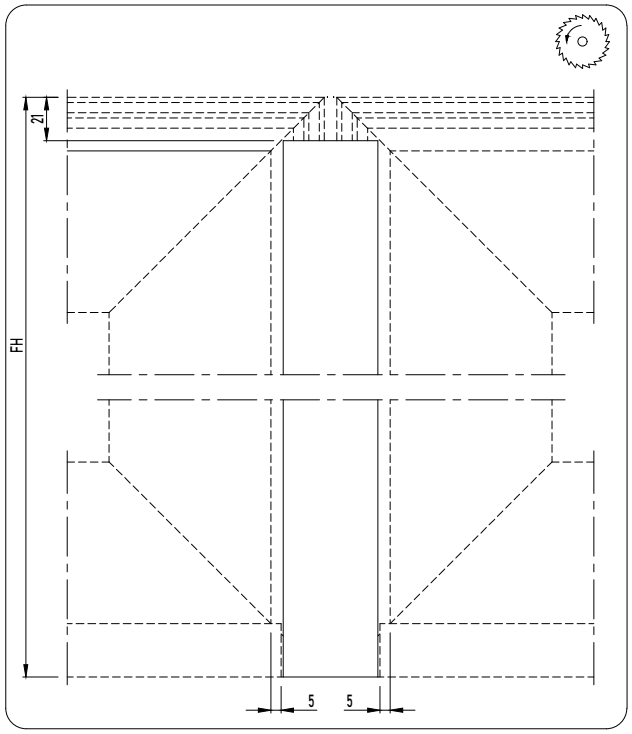

2

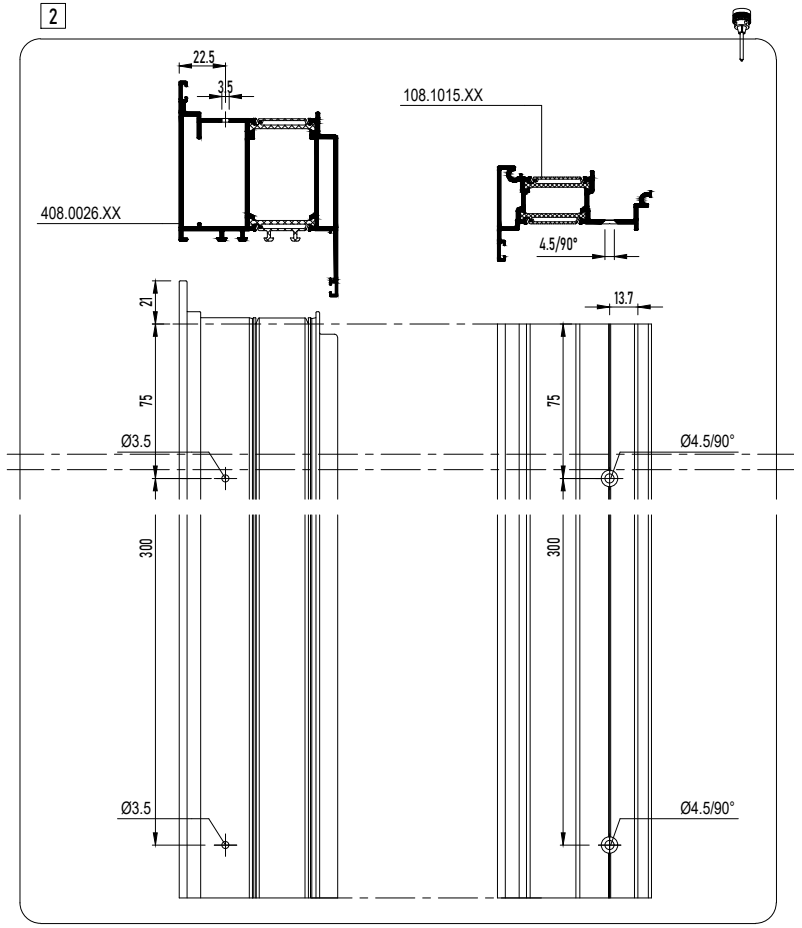

DOUBLE CASEMENT DOOR BRUSH

ASSEMBLY DOUBLE CASEMENT PROFILE INWARD OPENING

MASTERLINE 8-Fu

X DICHTINGSMIDDEL
MATIERE D'ETANCHEITE
SEALING AGENT
ABDICHTUNG



MONTAGEVOLGORDE
L 'ORDRE DE MONTAGE
THE ORDER OF ASSEMBLY
MONTAGEREIHENFOLGE

1 2 3 .

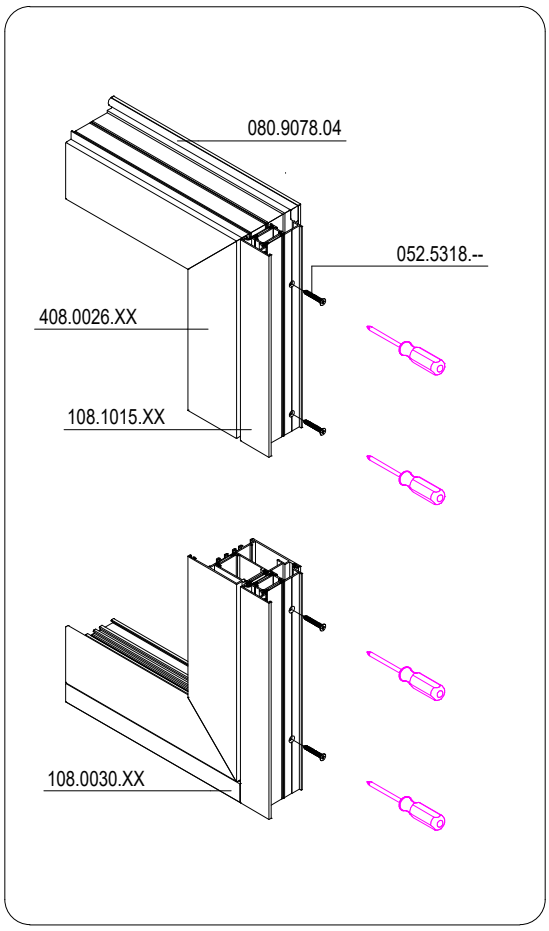

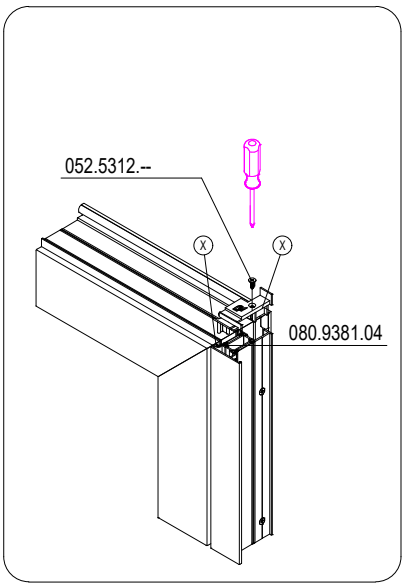

DOUBLE CASEMENT DOOR BRUSH

ASSEMBLY DOUBLE CASEMENT PROFILE INWARD OPENING

MASTERLINE 8-Fu



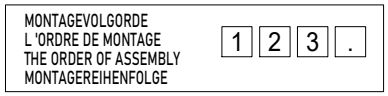

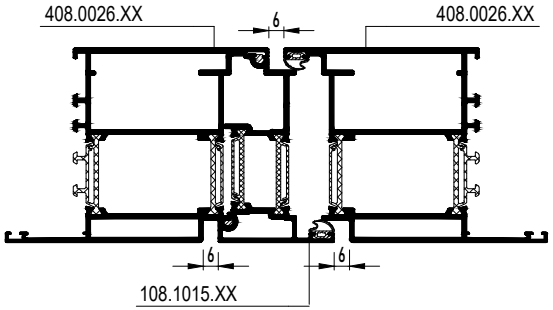

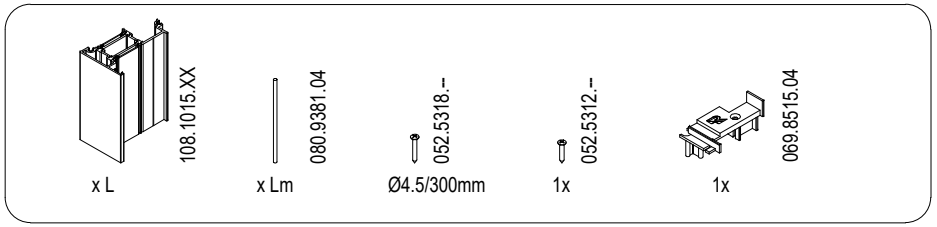

DOUBLE CASEMENT DOOR BRUSH

ASSEMBLY DOUBLE CASEMENT PROFILE INWARD OPENING

MASTERLINE 8-Fu

X	DICHTINGSMIDDEL MATIERE D'ETANCHEITE SEALING AGENT ABDICHTUNG



MONTAGEVOLGORDE L 'ORDRE DE MONTAGE THE ORDER OF ASSEMBLY MONTAGEREIHENFOLGE	1 2 3 .

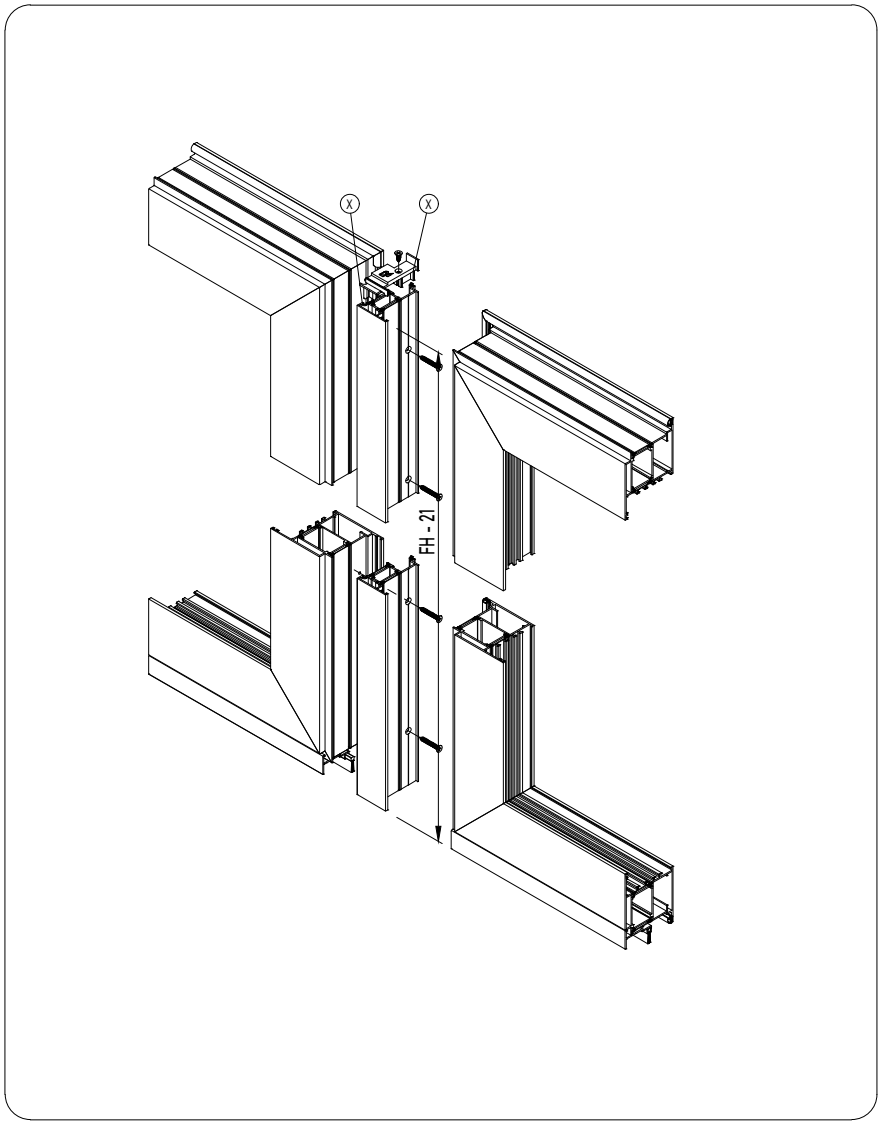

DOUBLE CASEMENT DOOR WEATHER STRIP

ASSEMBLY DOUBLE CASEMENT PROFILE INWARD OPENING

MASTERLINE 8-Fu

X DICHTINGSMIDDEL
MATIERE D'ETANCHEITE
SEALING AGENT
ABDICHTUNG

MONTAGEVOLGORDE
L'ORDRE DE MONTAGE
THE ORDER OF ASSEMBLY
MONTAGEREIHENFOLGE
1 2 3 .

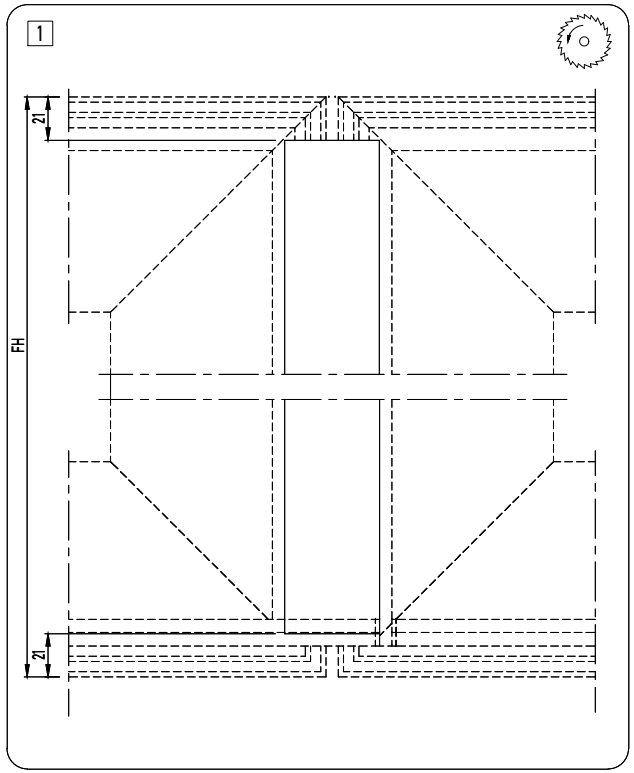

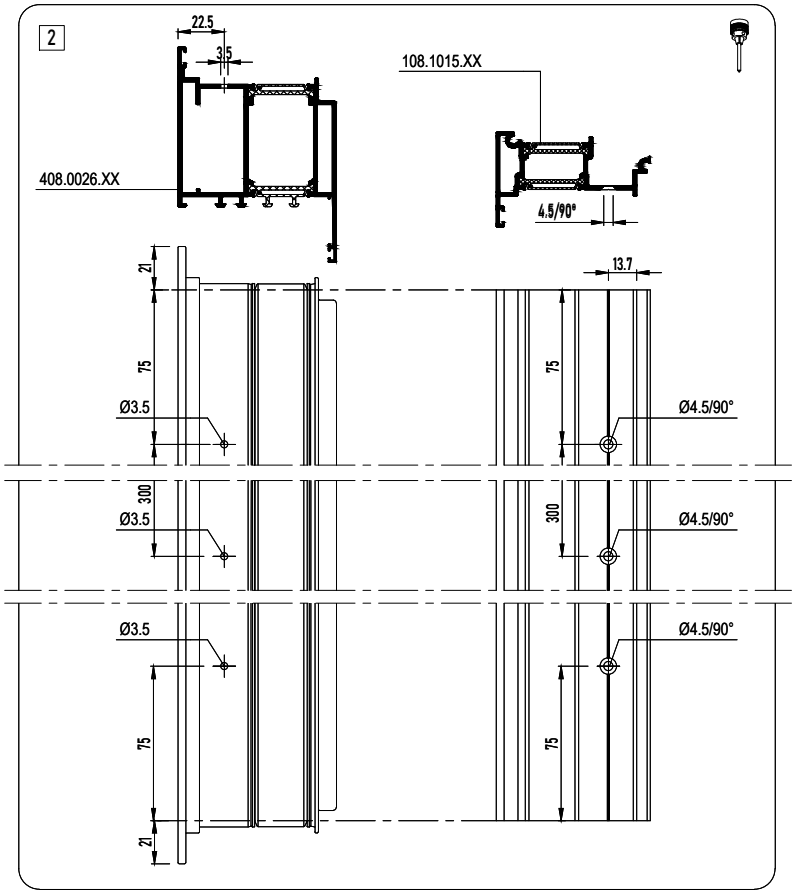

DOUBLE CASEMENT DOOR WEATHER STRIP

ASSEMBLY DOUBLE CASEMENT PROFILE INWARD OPENING

MASTERLINE 8-Fu

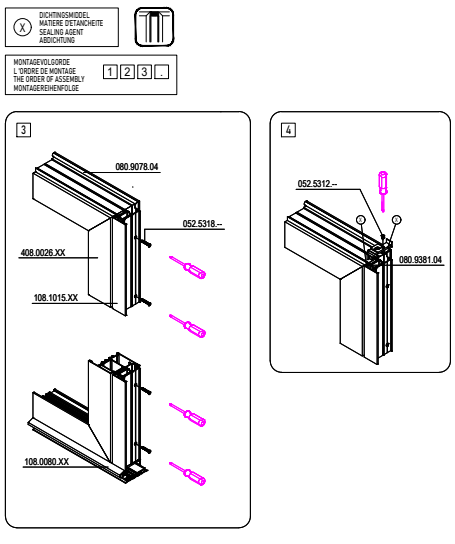

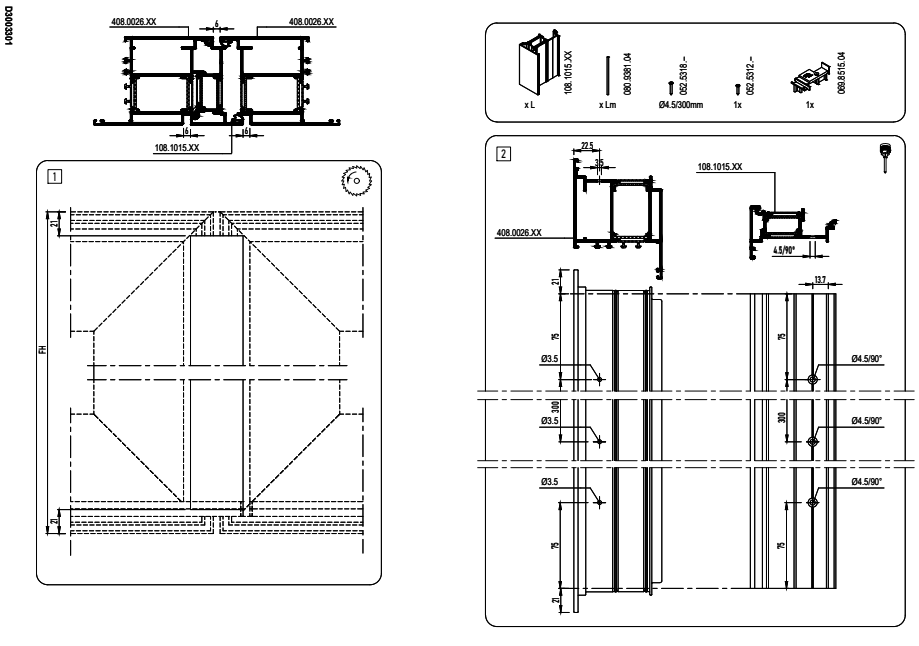

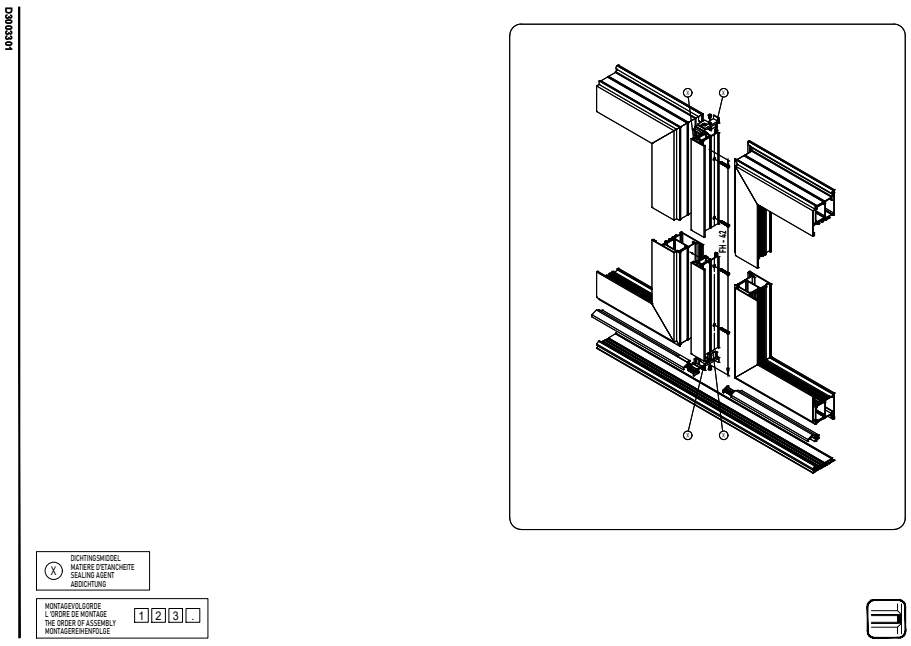

DOUBLE CASEMENT DOOR WEATHER STRIP

ASSEMBLY DOUBLE CASEMENT PROFILE INWARD OPENING

MASTERLINE 8-Fu

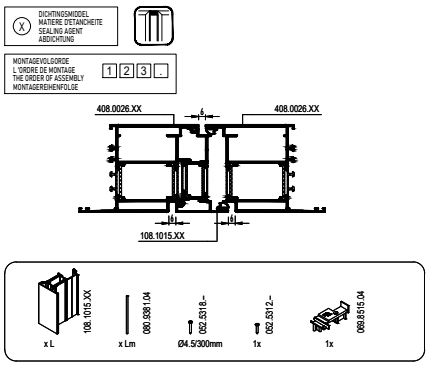

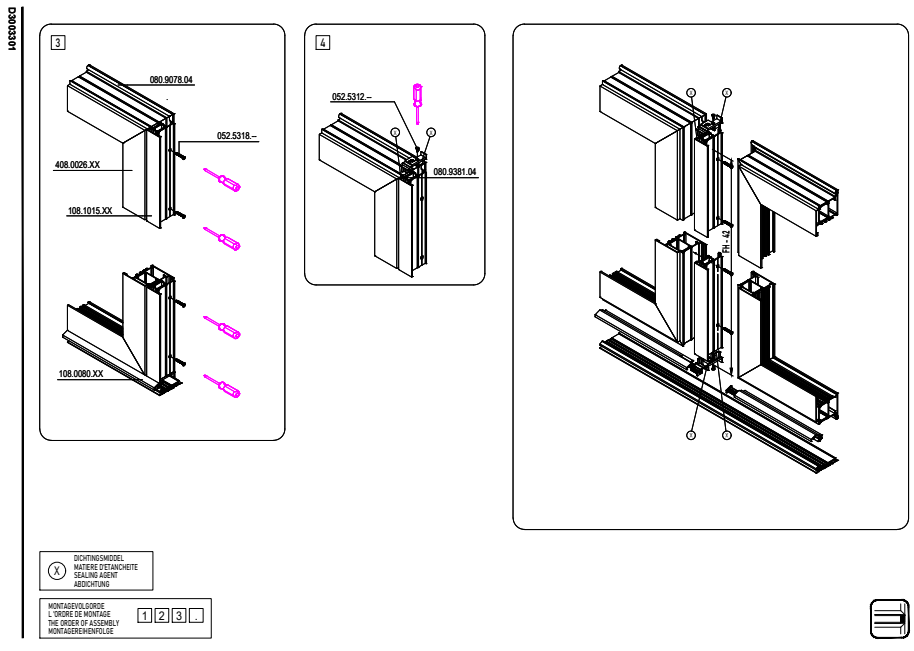

DOUBLE CASEMENT DOOR WEATHER STRIP

ASSEMBLY DOUBLE CASEMENT PROFILE INWARD OPENING

MASTERLINE 8-Fu

X	DICHTINGSMIDDEL MATIERE D'ETANCHEITE SEALING AGENT ABDICHTUNG



MONTAGEVOLGORDE L 'ORDRE DE MONTAGE THE ORDER OF ASSEMBLY MONTAGEREIHENFOLGE	1 2 3 .

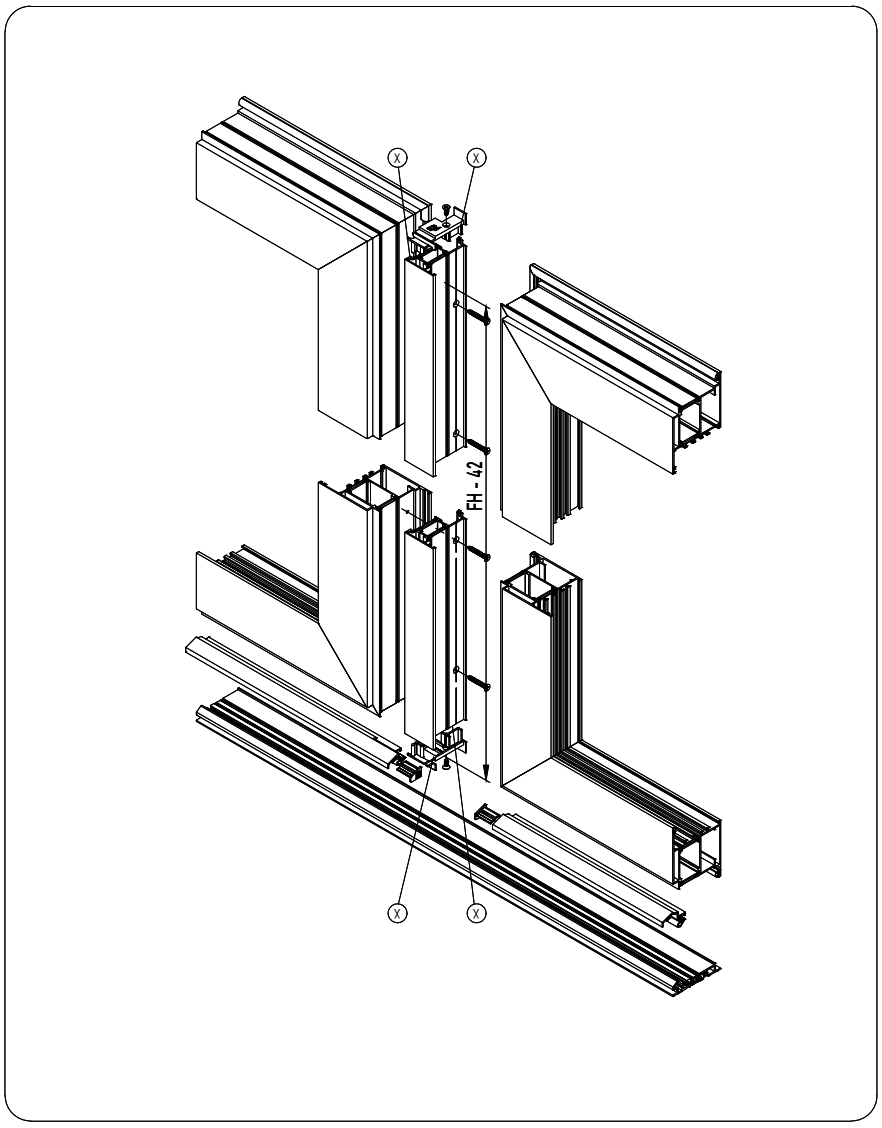

DOUBLE CASEMENT DOOR WEATHER STRIP

ASSEMBLY DOUBLE CASEMENT PROFILE OUTWARD OPENING

MASTERLINE 8-Fu

X DICHTINGSMIDDEL
MATIERE D'ETANCHEITE
SEALING AGENT
ABDICHTUNG

MONTAGEVOLGORDE
L'ORDRE DE MONTAGE
THE ORDER OF ASSEMBLY
MONTAGEREIHENFOLGE
1 2 3 .

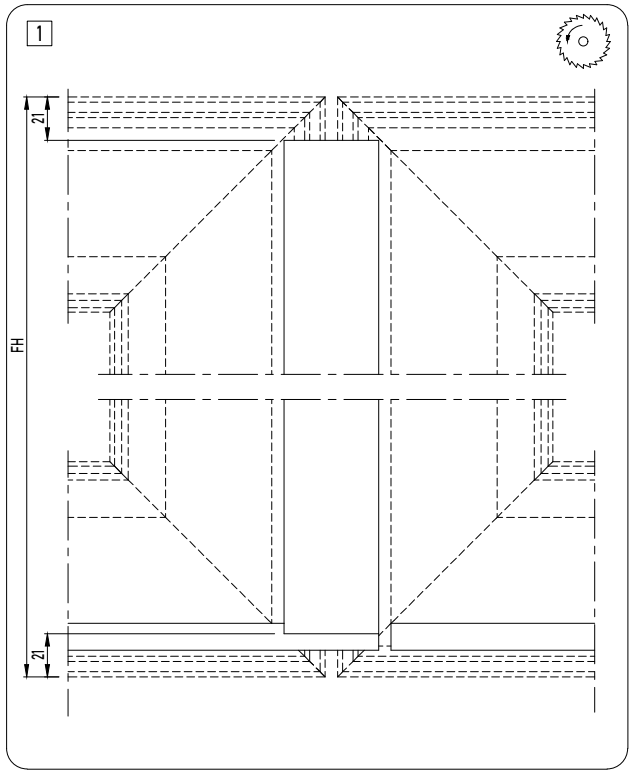

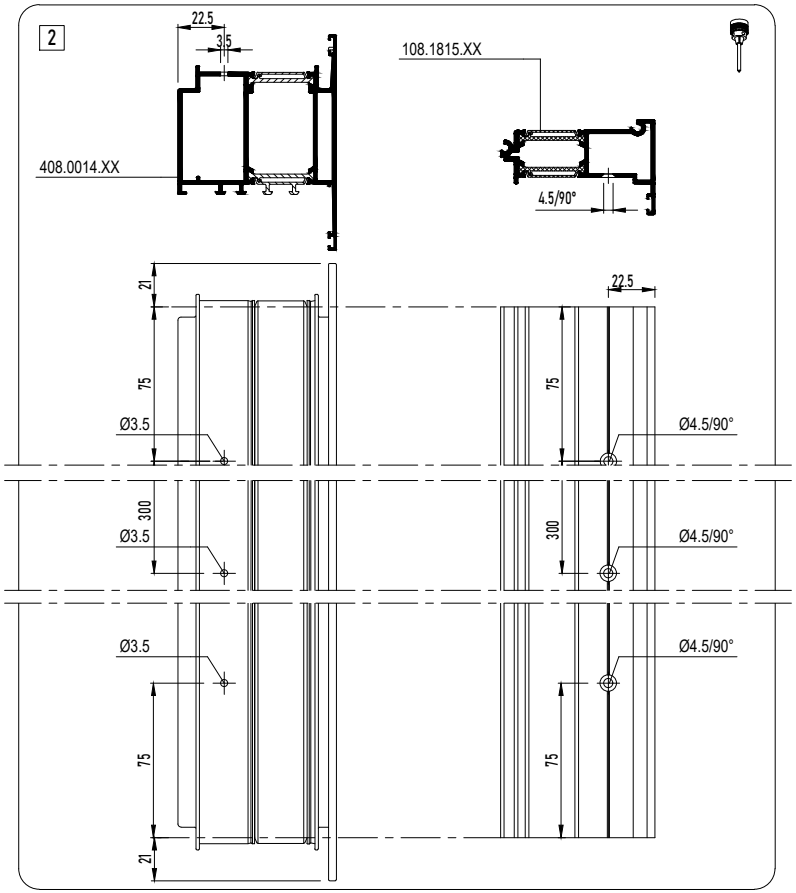

DOUBLE CASEMENT DOOR WEATHER STRIP

ASSEMBLY DOUBLE CASEMENT PROFILE OUTWARD OPENING

MASTERLINE 8-Fu

X DICHTINGSMIDDEL
MATIERE D'ETANCHEITE
SEALING AGENT
ABDICHTUNG



MONTAGEVOLGORDE
L 'ORDRE DE MONTAGE
THE ORDER OF ASSEMBLY
MONTAGEREIHENFOLGE

1 2 3 .

3

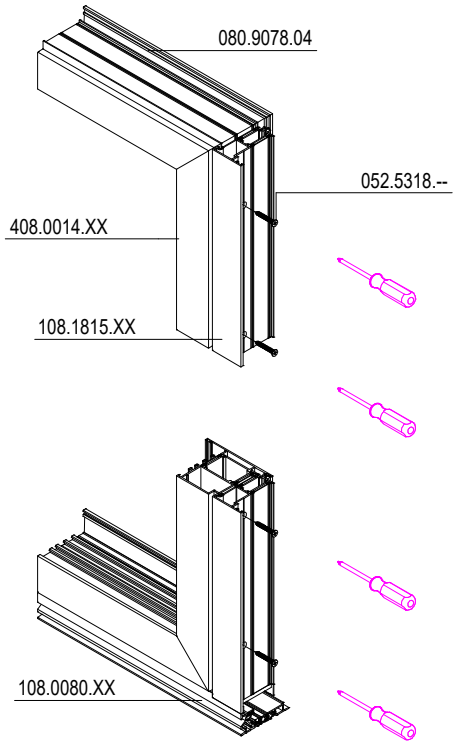

4

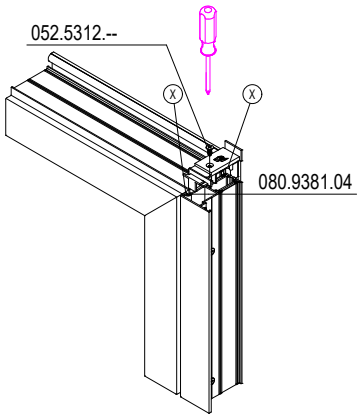

DOUBLE CASEMENT DOOR WEATHER STRIP

ASSEMBLY DOUBLE CASEMENT PROFILE OUTWARD OPENING

MASTERLINE 8-Fu



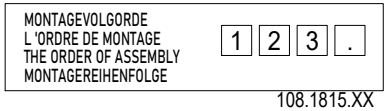

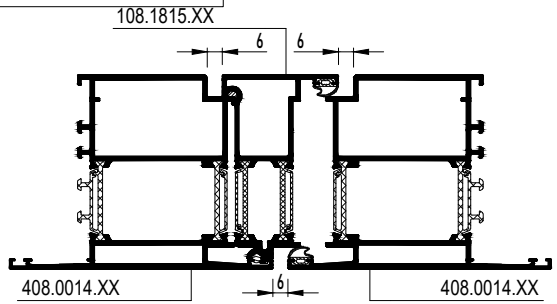

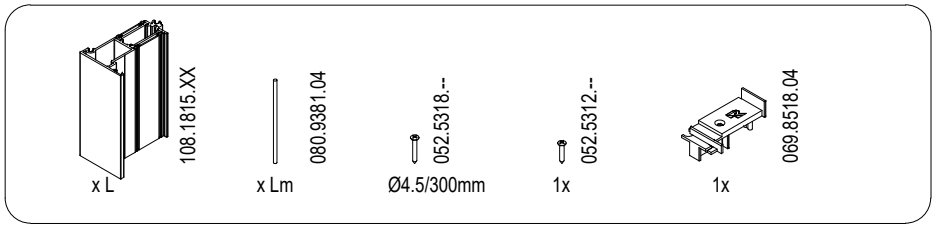

DOUBLE CASEMENT DOOR WEATHER STRIP

ASSEMBLY DOUBLE CASEMENT PROFILE OUTWARD OPENING

MASTERLINE 8-Fu

X	DICHTINGSMIDDEL MATIERE D'ETANCHEITE SEALING AGENT ABDICHTUNG

MONTAGEVOLGORDE L 'ORDRE DE MONTAGE THE ORDER OF ASSEMBLY MONTAGEREIHENFOLGE	1 2 3 .

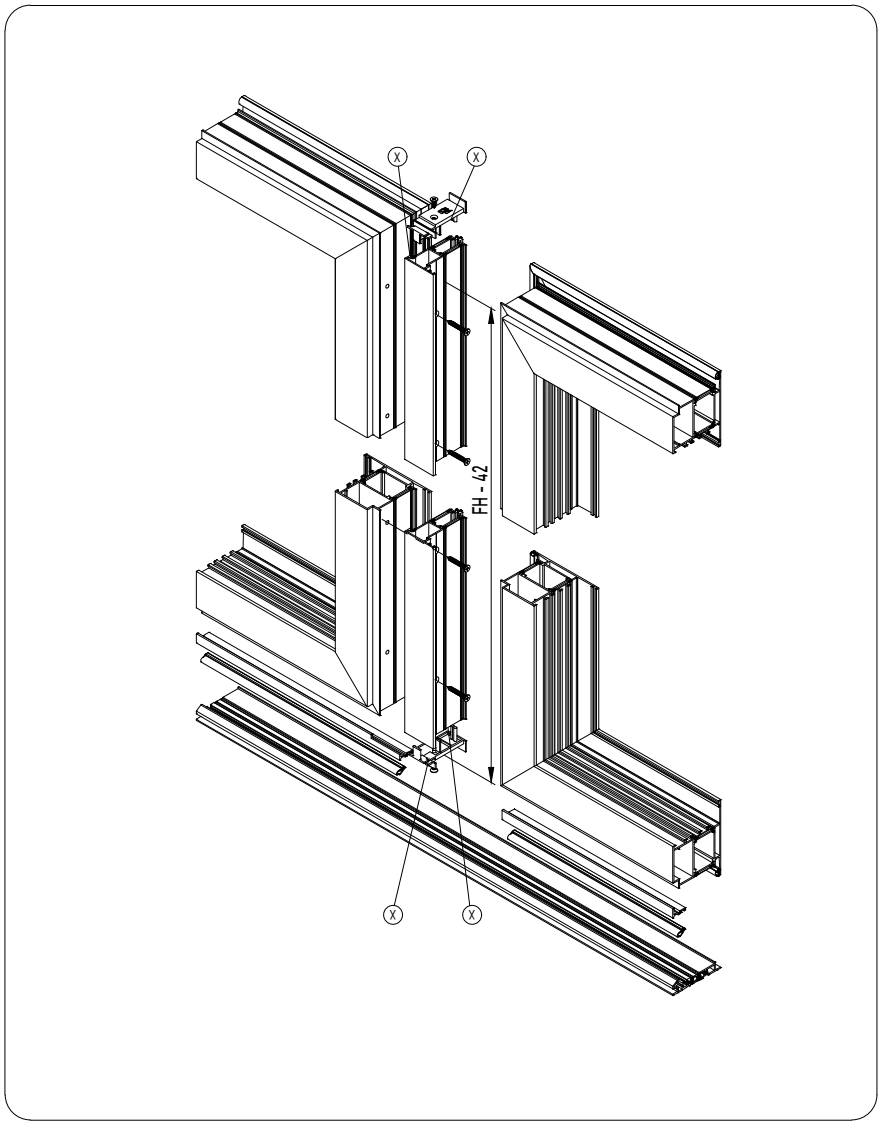

DOUBLE CASEMENT DOOR AUTOMATIC SEALING

ASSEMBLY DOUBLE CASEMENT PROFILE INWARD OPENING

MASTERLINE 8-Fu

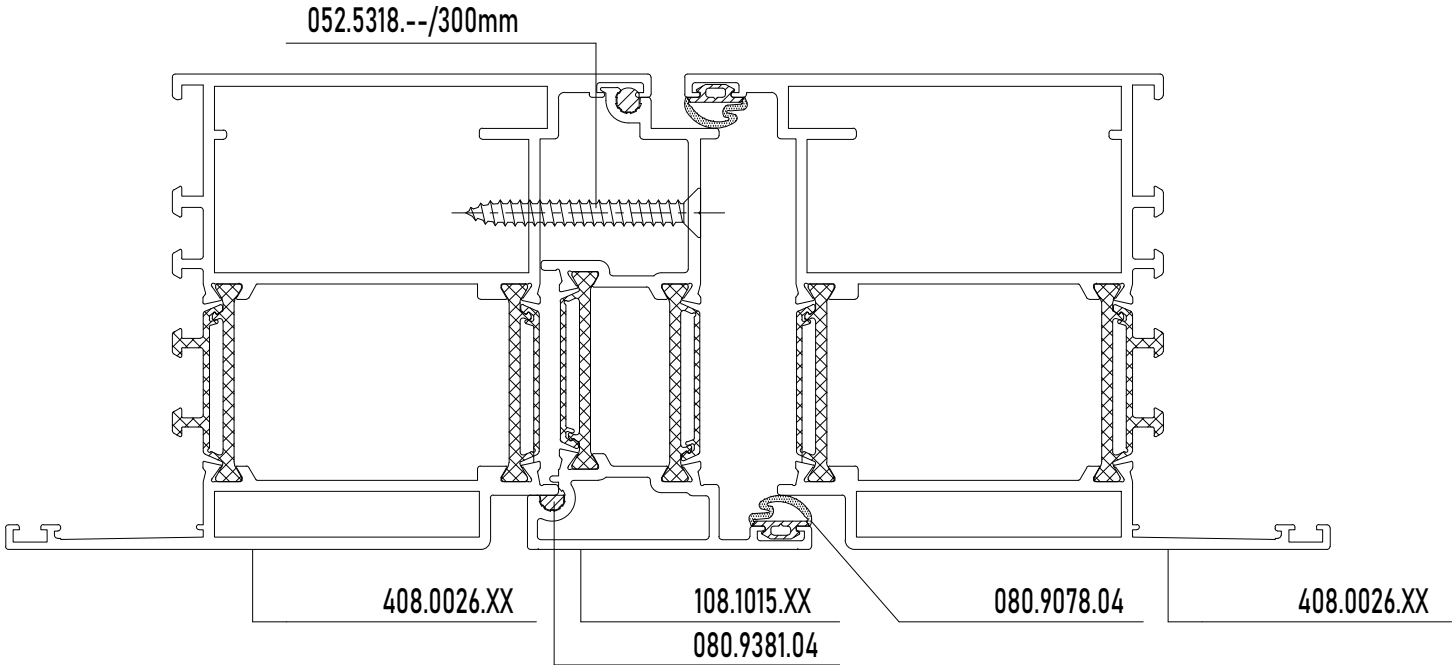

DOUBLE CASEMENT AUTOMATIC SEALING DOOR

ASSEMBLY DOUBLE CASEMENT PROFILE OUTWARD OPENING

MASTERLINE 8-Fu

X DICHTINGSMIDDEL
MATIERE D'ETANCHEITE
SEALING AGENT
ABDICHTUNG

MONTAGEVOLGORDE
L 'ORDRE DE MONTAGE
THE ORDER OF ASSEMBLY
MONTAGEREIHENFOLGE
1 2 3 .

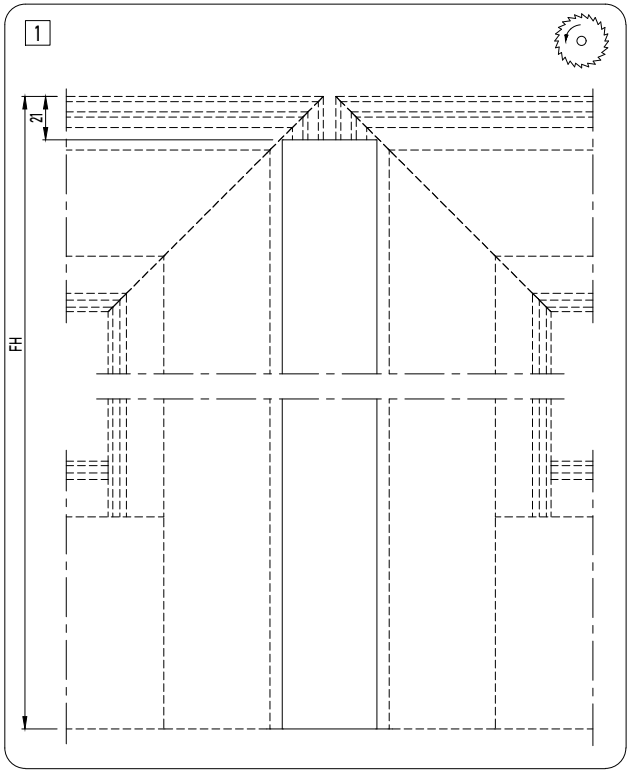

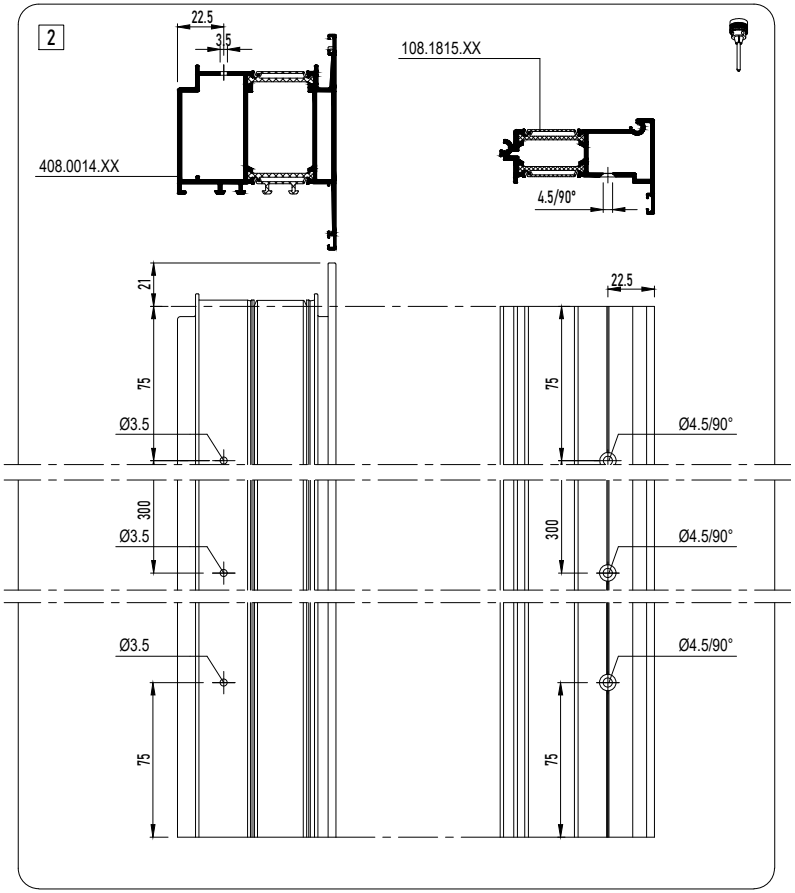

DOUBLE CASEMENT AUTOMATIC SEALING DOOR

ASSEMBLY DOUBLE CASEMENT PROFILE OUTWARD OPENING

MASTERLINE 8-Fu

X DICHTINGSMIDDEL
MATIERE D'ETANCHEITE
SEALING AGENT
ABDICHTUNG



MONTAGEVOLGORDE
L 'ORDRE DE MONTAGE
THE ORDER OF ASSEMBLY
MONTAGEREIHENFOLGE

1 2 3 .

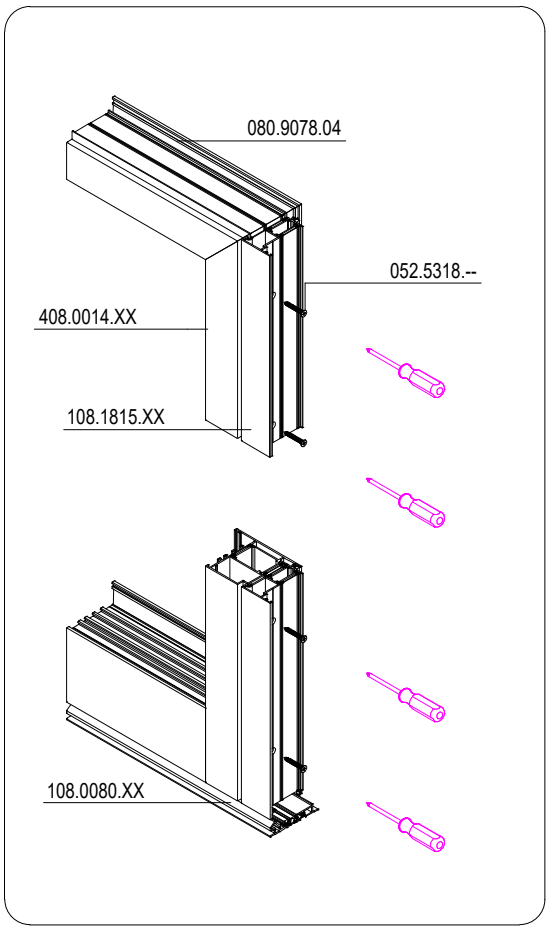

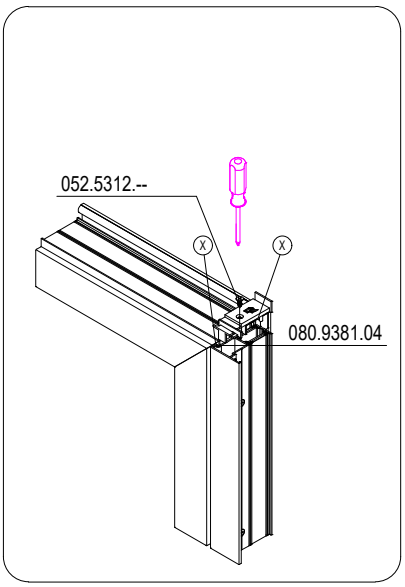

DOUBLE CASEMENT AUTOMATIC SEALING DOOR

ASSEMBLY DOUBLE CASEMENT PROFILE OUTWARD OPENING

MASTERLINE 8-Fu

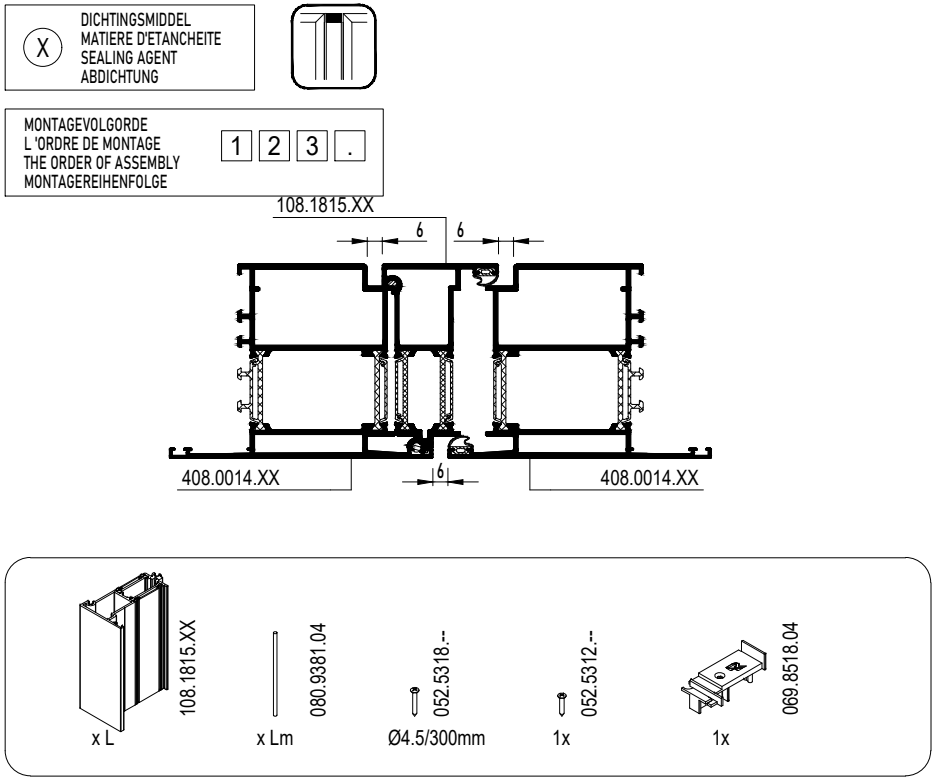

DOUBLE CASEMENT AUTOMATIC SEALING DOOR

ASSEMBLY DOUBLE CASEMENT PROFILE OUTWARD OPENING

MASTERLINE 8-Fu

X	DICHTINGSMIDDEL MATIERE D'ETANCHEITE SEALING AGENT ABDICHTUNG



MONTAGEVOLGORDE L 'ORDRE DE MONTAGE THE ORDER OF ASSEMBLY MONTAGEREIHENFOLGE	1 2 3 .

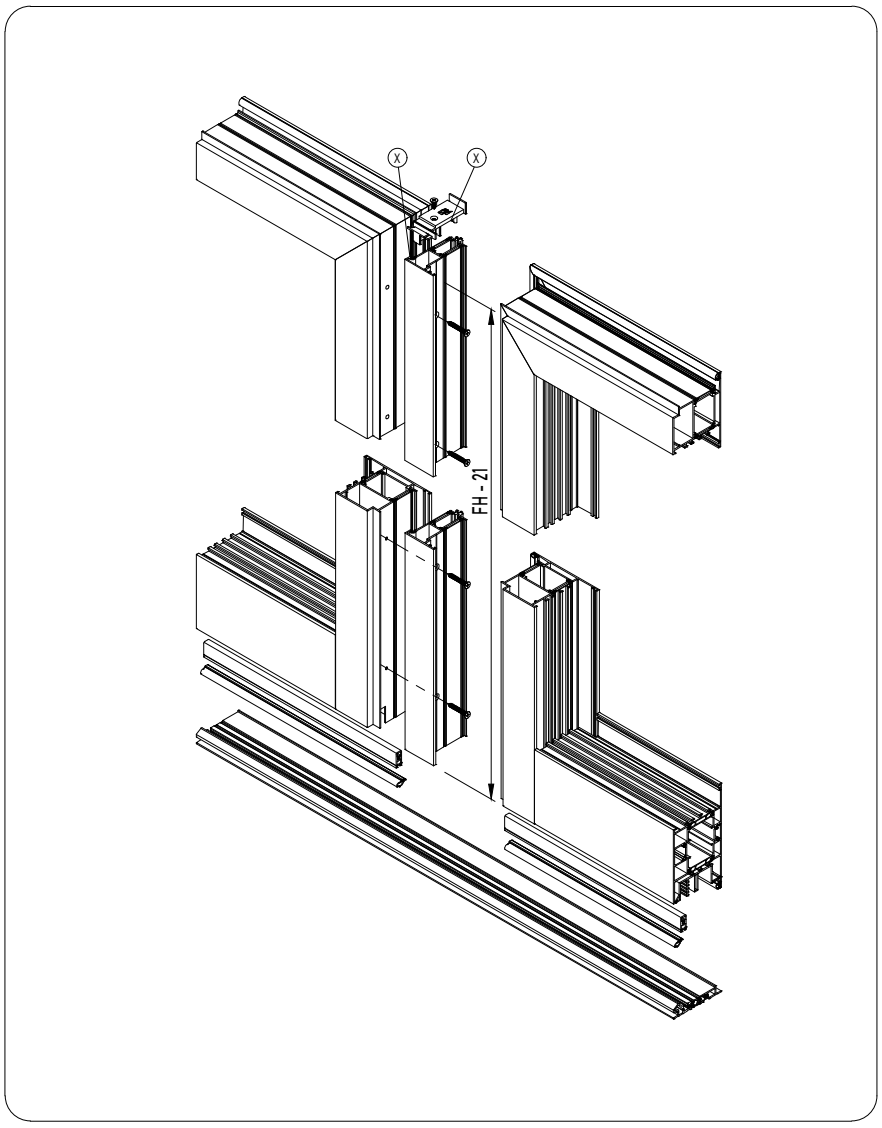

DOOR BRUSH INWARD OPENING

DOOR INWARD OPENING WITH BRUSH - FLOOR PROFILE

MASTERLINE 8-Fu

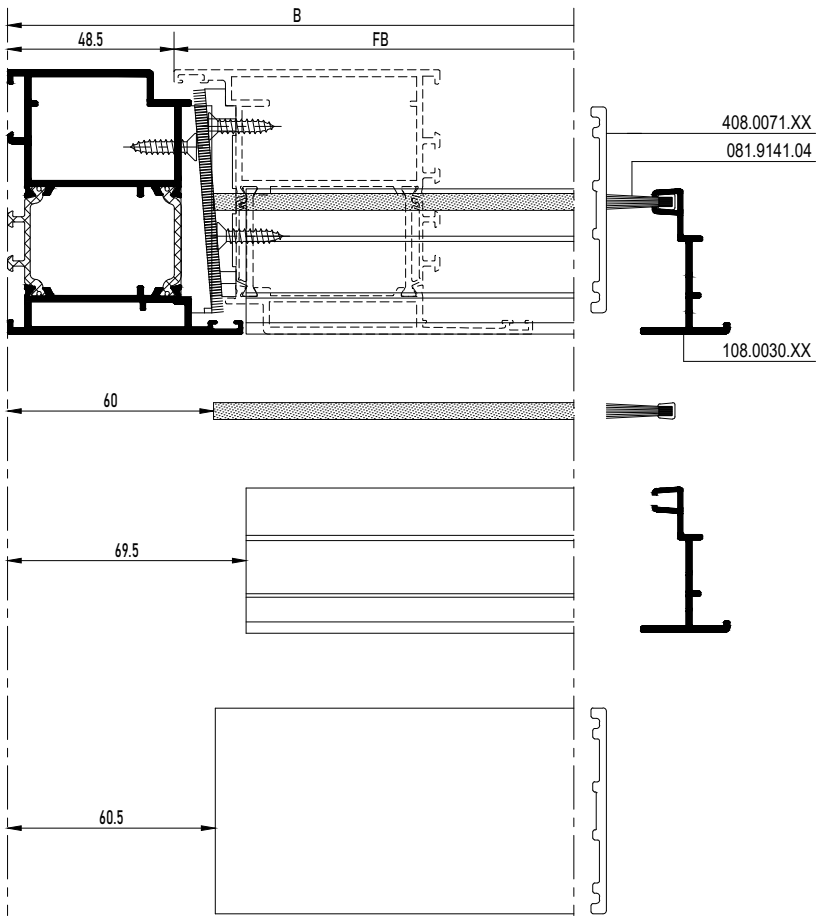

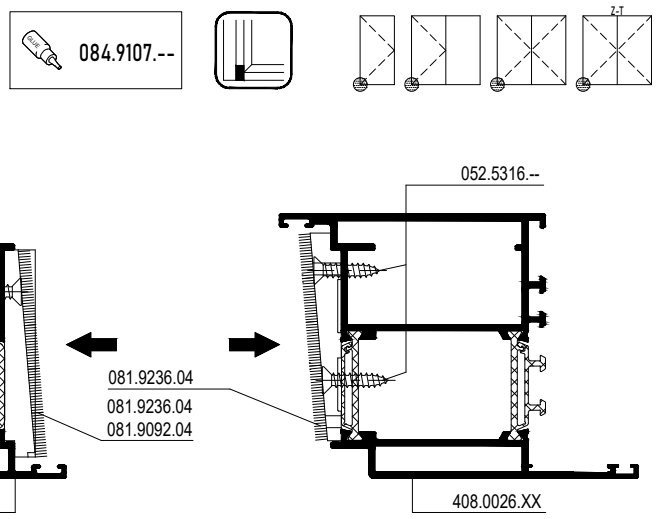

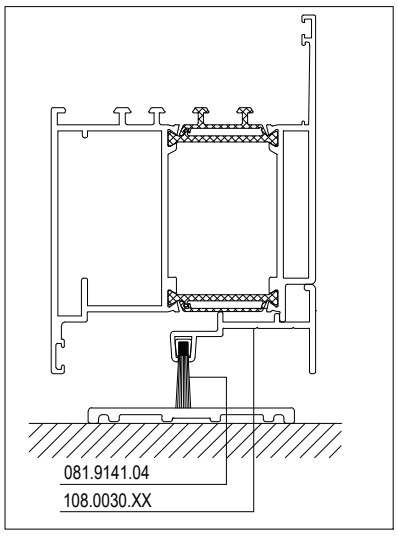

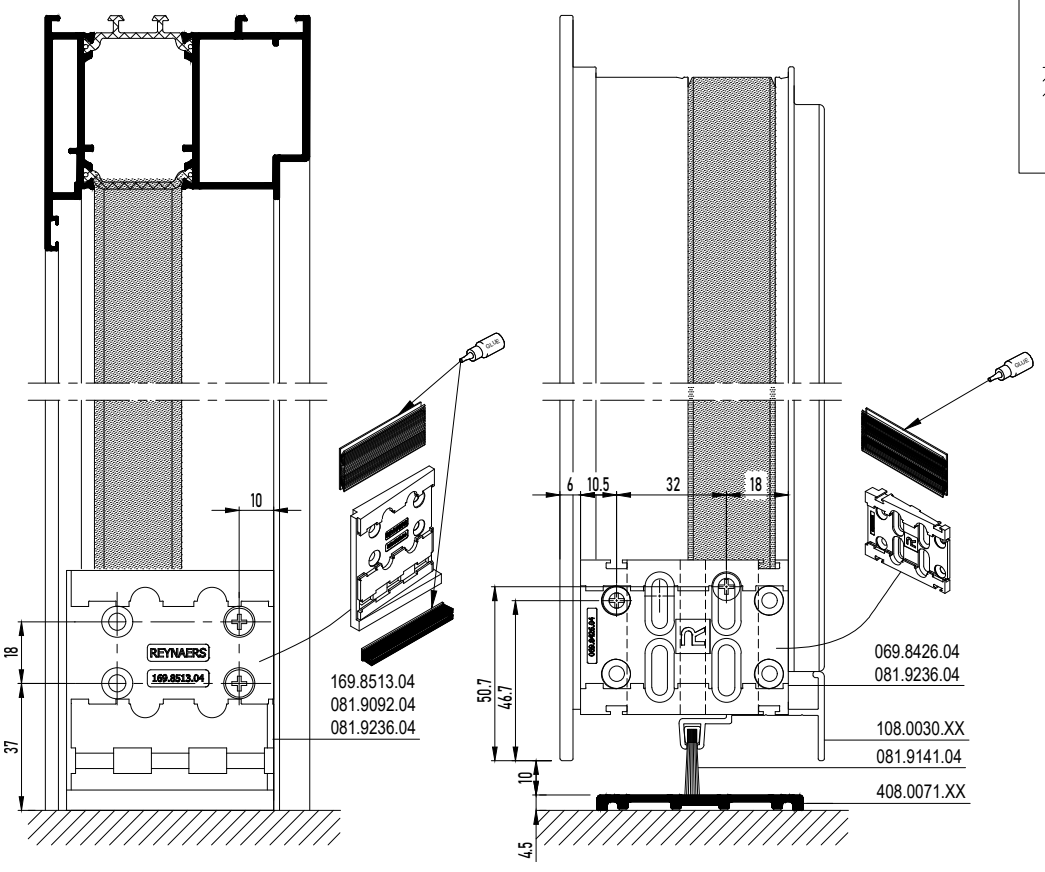

DOOR BRUSH INWARD OPENING

DOOR INWARD OPENING WITH BRUSH

MASTERLINE 8-Fu

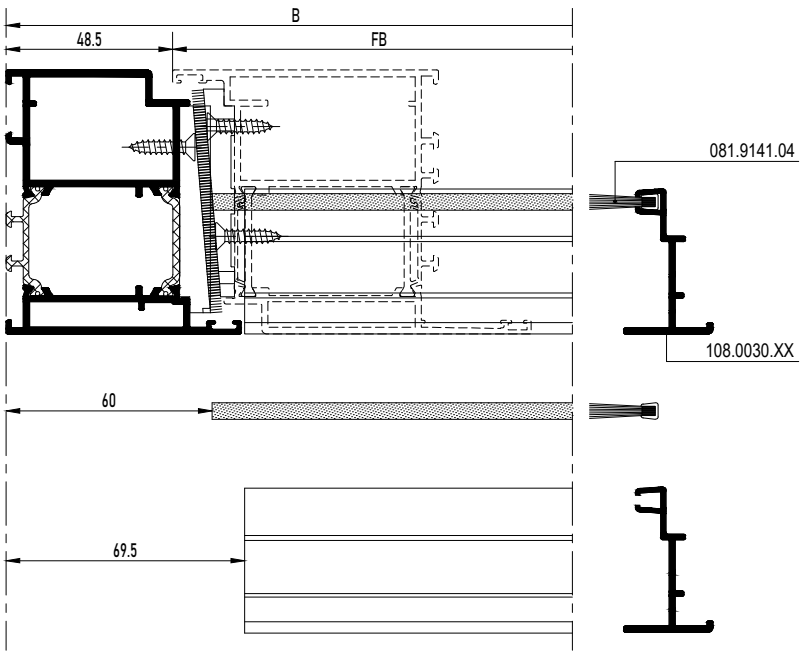

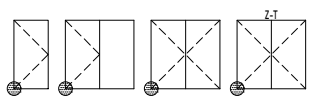

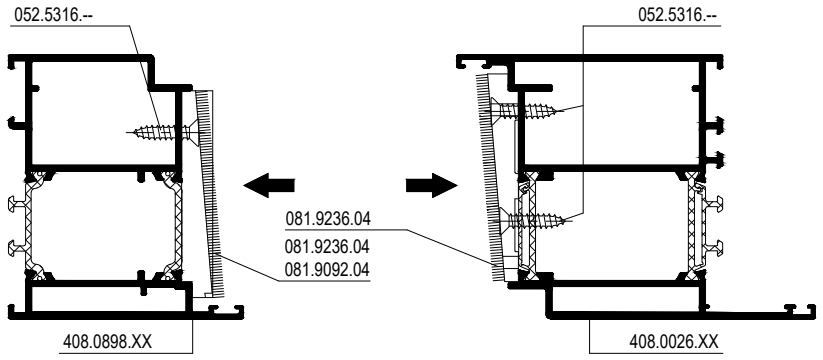

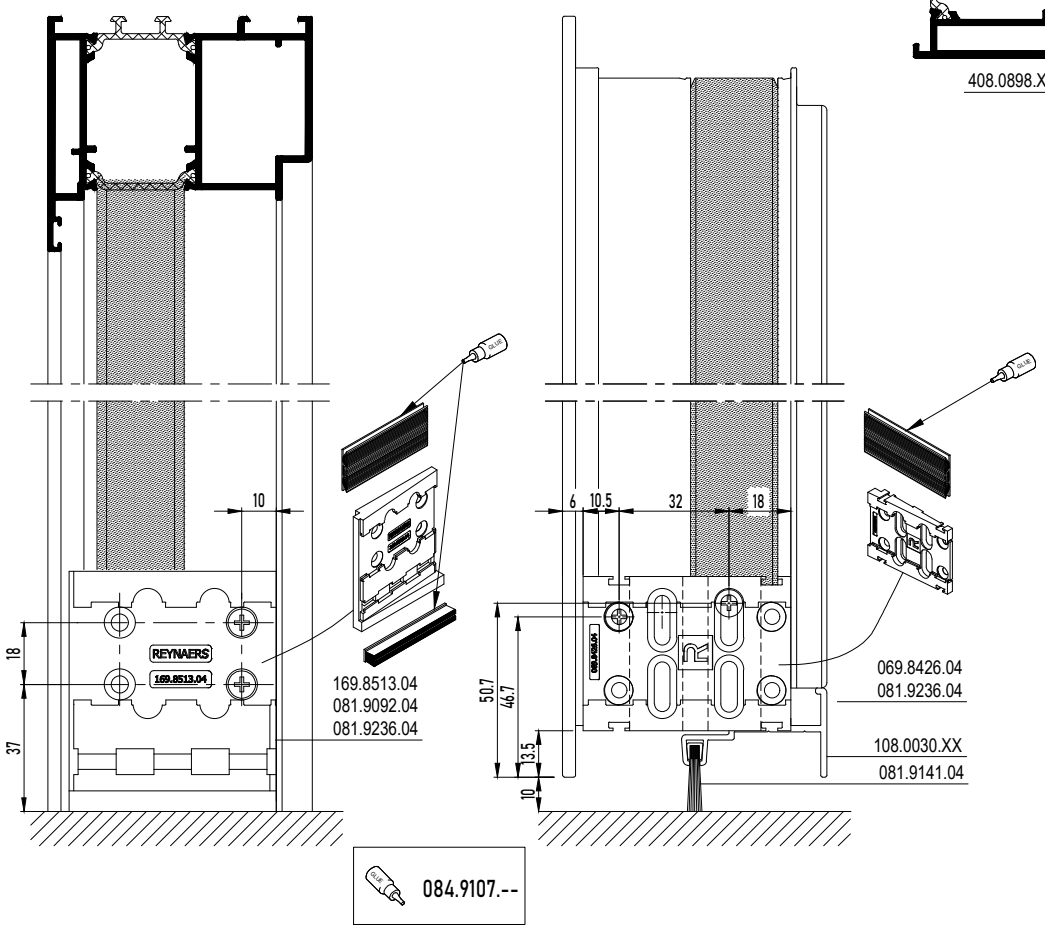

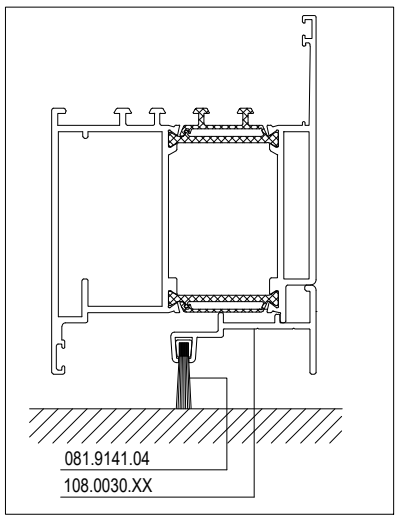

DOOR BRUSH INWARD OPENING

DOOR INWARD OPENING WITH BRUSH

MASTERLINE 8-Fu

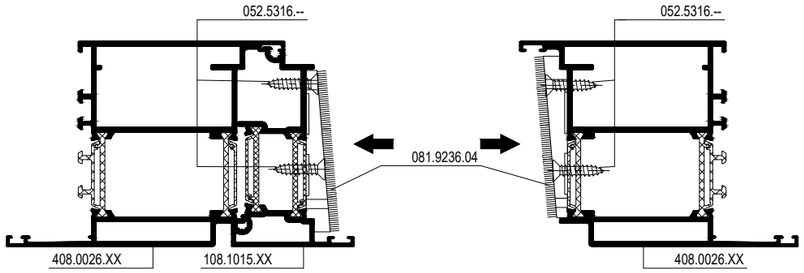

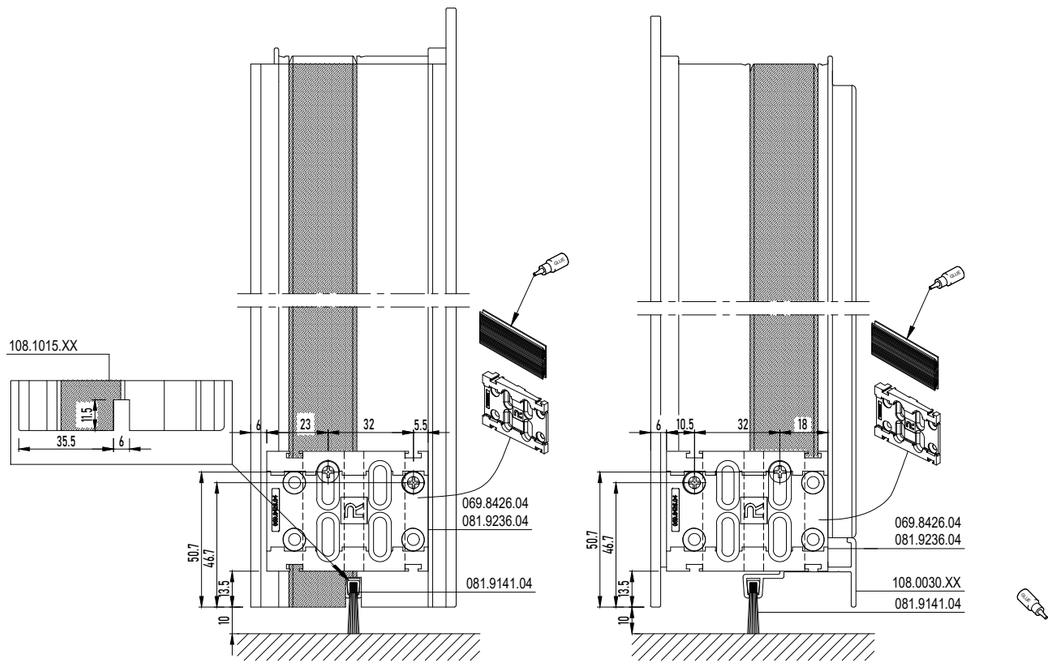

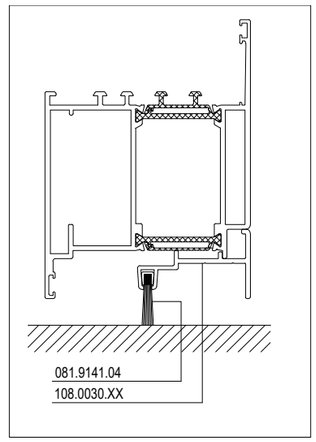

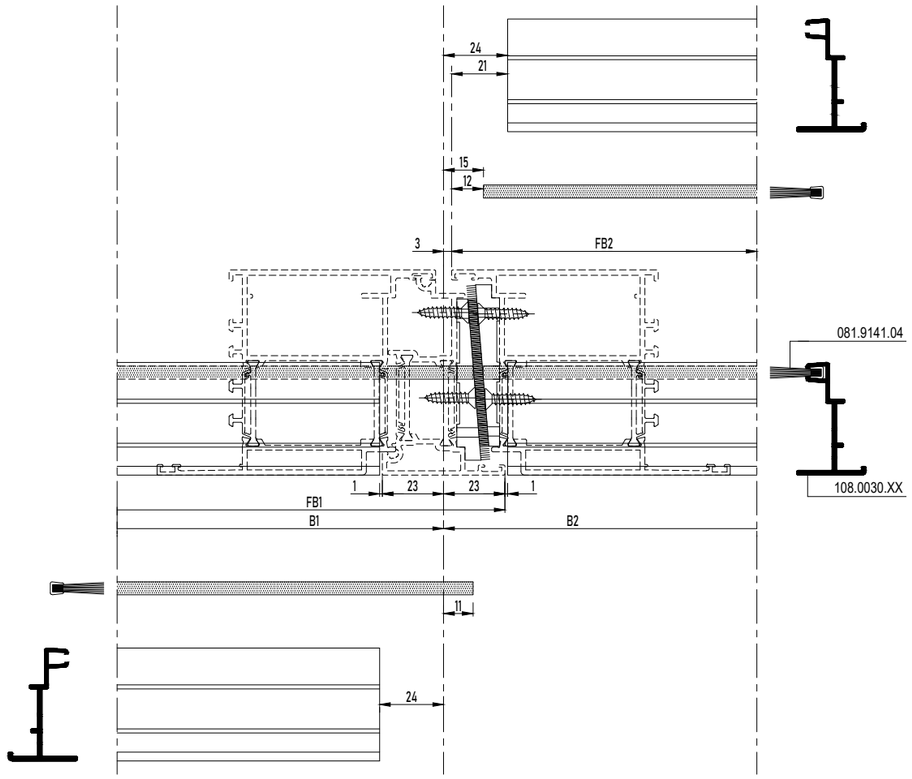

DOOR BRUSH INWARD OPENING

DOOR INWARD OPENING WITH BRUSH

MASTERLINE 8-Fu

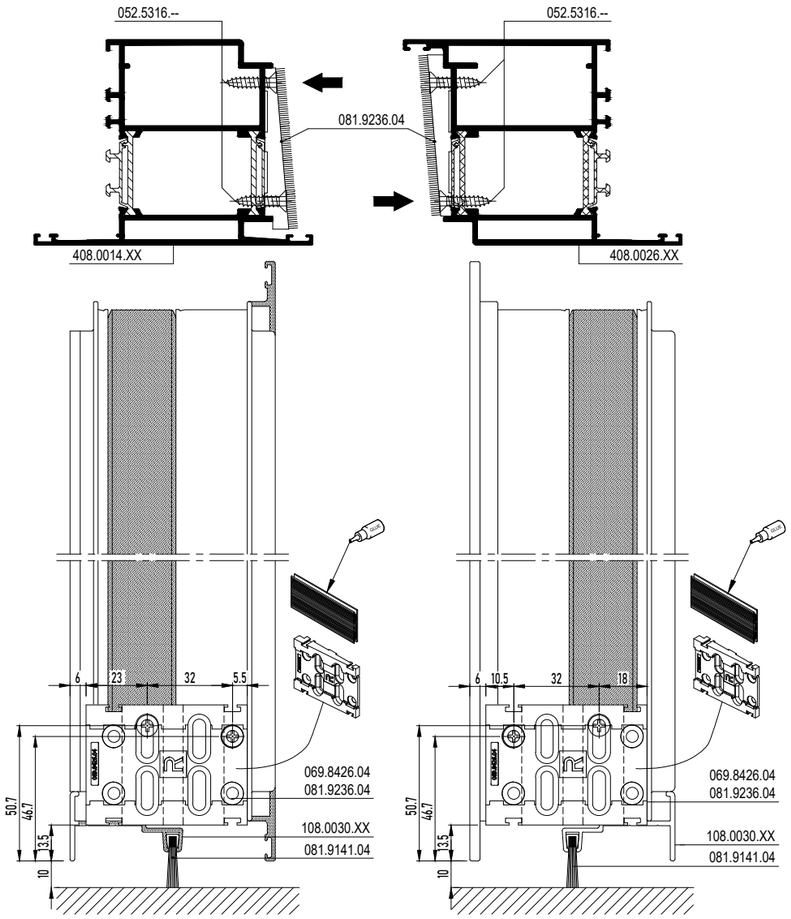

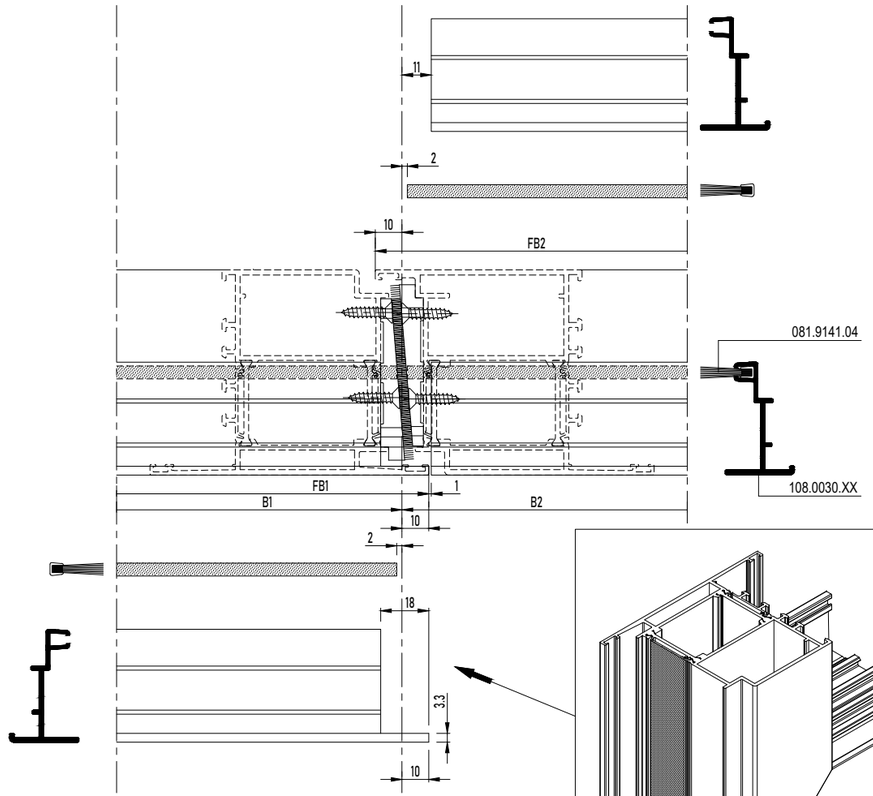

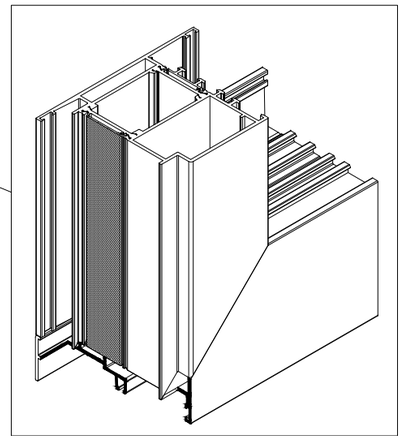

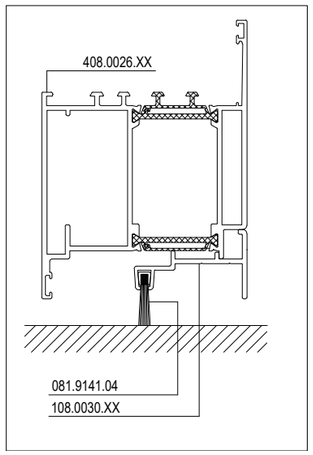

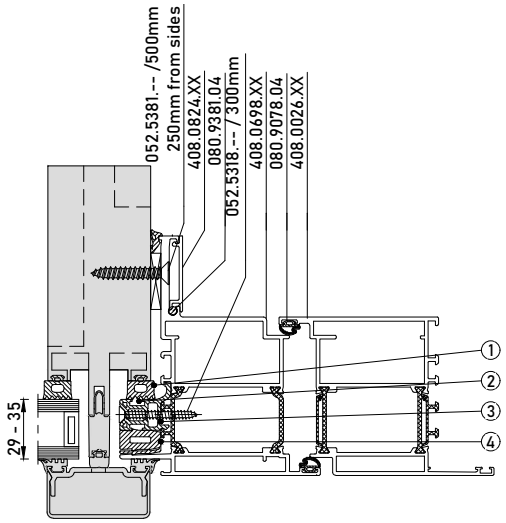
052.5381.-- /500mm
250mm from sides
408.0824.XX
080.9381.04
052.5318.-- / 300mm
408.0698.XX
080.9078.04
408.0026.XX
29 - 35
1
2
3
4

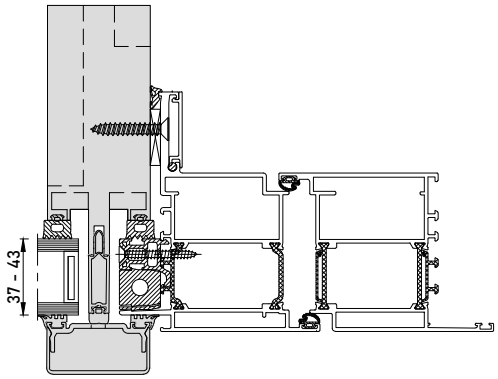
37 - 43

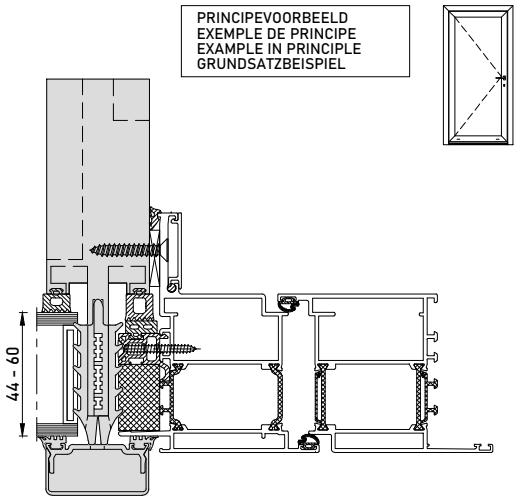
PRINCIPEVOORBEELD
EXEMPLE DE PRINCIPE
EXAMPLE IN PRINCIPLE
GRUNDSATZBEISPIEL
44 - 60

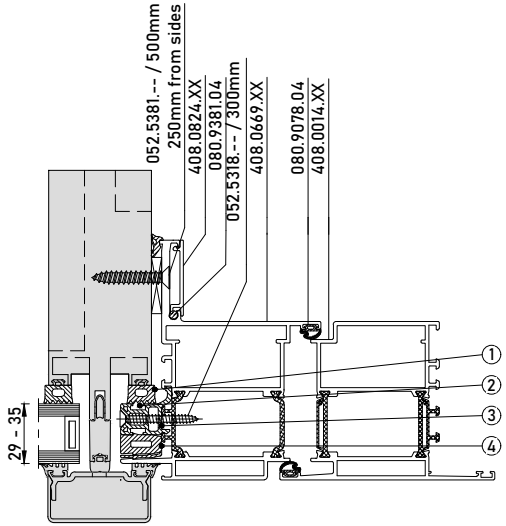
052.5381.-- / 500mm
250mm from sides
408.0824.XX
080.9381.04
052.5318.-- / 300mm
408.0669.XX
080.9078.04
408.0014.XX
29 - 35
1
2
3
4

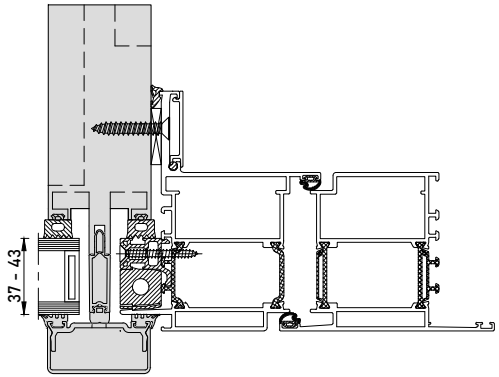
37 - 43

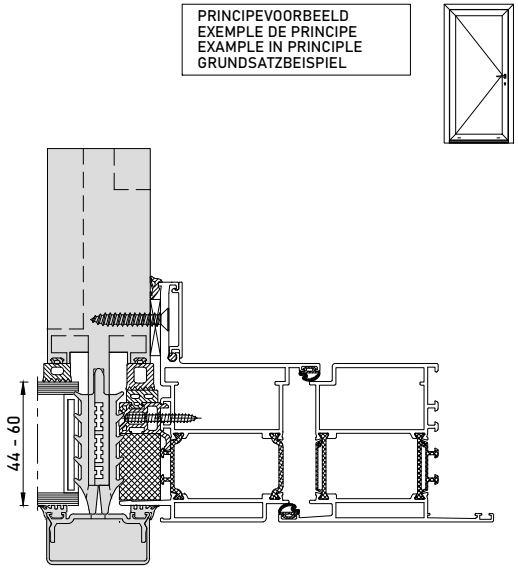
PRINCIPEVOORBEELD
EXEMPLE DE PRINCIPE
EXAMPLE IN PRINCIPLE
GRUNDSATZBEISPIEL
44 - 60

X	①	②	③	④
29	080.9810.04	-	408.0827.04	080.9677.04
30	080.9810.04	080.9805.04	408.0827.04	080.9677.04
31	080.8971.04	-	408.0827.04	080.9677.04
32	080.8971.04	080.9805.04	408.0827.04	080.9677.04
33	080.9810.04	080.9808.04	408.0827.04	080.9677.04
34	080.9812.04	080.9805.04	408.0827.04	080.9677.04
35	080.9810.04	080.9809.04	408.0827.04	080.9677.04
36	080.8971.04	-	408.0827.04	080.9677.04
37	080.9810.04	-	408.0827.04	080.9677.04
38	080.9810.04	080.9805.04	408.0827.04	080.9677.04
39	080.8971.04	-	408.0827.04	080.9677.04
40	080.8971.04	080.9805.04	408.0827.04	080.9678.04
41	080.9810.04	080.9808.04	408.0827.04	080.9678.04
42	080.9812.04	080.9805.04	408.0827.04	080.9678.04
43	080.9810.04	080.9809.04	408.0827.04	080.9678.04
44	080.9814.04	080.9805.04	408.0827.04	080.9678.04
45	080.8971.04	080.9809.04	408.0827.04	080.9678.04
46	080.9812.04	-	408.0827.04	080.9678.04
47	080.9812.04	080.9809.04	408.0827.04	080.9678.04
48	080.9814.04	-	408.0827.04	080.9678.04
49	080.8971.04	-	408.0827.04	080.9678.04
50	080.9810.04	-	408.0827.04	-
51	080.9810.04	080.9805.04	408.0827.04	-
52	080.8971.04	-	408.0827.04	-
53	080.8971.04	080.9805.04	408.0827.04	-
54	080.9810.04	080.9808.04	408.0827.04	-
55	080.9812.04	080.9805.04	408.0827.04	-
56	080.9810.04	080.9809.04	408.0827.04	-
57	080.9814.04	080.9805.04	408.0827.04	-
58	080.8971.04	080.9809.04	408.0827.04	-
59	080.9812.04	-	408.0827.04	-
60	080.9812.04	080.9809.04	408.0827.04	-

			#	Lm
408.0824.XX			1	B - 57.8
			2	H - 30.5

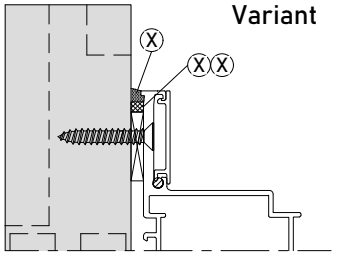

X	DICHTINGSMIDDEL MATIERE D'ETANCHEITE SEALING AGENT ABDICHTUNG
XX	POLYETHYLEEENSCHUIM MET GESLOTEN CELLEN POLYETHYLENE-MOUSSE A CELLUES POLYETHYLENE CLOSED-CELL FOAM POLYETHYLEN GESCHLOSSENZELLINGEM SCHAUMSTOFF

ASSEMBLY INSULATION GASKET (HI)

ASSEMBLY INSULATION GASKET 087.9940.04 / 087.9941.04

CS 77, MASTERLINE 8-Fu

METHODE VERKLEVEN
METHODE COLLAGE
METHOD BONDING
METHODE KLEBEN

! REINIGEN EN ONTVETTEN VAN GLAS- EN PROFIELOPPERVLAK
RINCER ET DEGRAISSER LA SURFACE DU VERRE ET DU PROFILE
CLEANING AND DEGREASING OF GLASS AND PROFILE SURFACE
REINIGEN UND ENTFETTEN DER GLAS- UND PROFILEOBERFLACHE

1. 086.9231.-- REYNAERS SAFETY CLEAN
2. 086.9230.-- REYNAERS MULTI FOAM
3. 086.9232.-- REYNAERS PRIMER SEAL & BOND SPECIAL
4. 084.9056.04 GLUE
5. 087.9941.04 INSULATION GASKET
6. 052.5308.-- TORX SCREW (BIT TORX 10)

! CS 77: NIET GEBRUIKEN AAN SLOTZIJDE
CS 77: NE PAS UTILISER SUR LE CÔTÉ DE LA SERRURE
CS 77: DON'T USE AT LOCK SIDE
CS 77: NICHT AUF DER SCHLOSSSEITE VERWENDEN

1 2 3

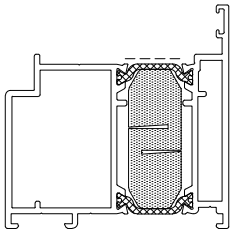

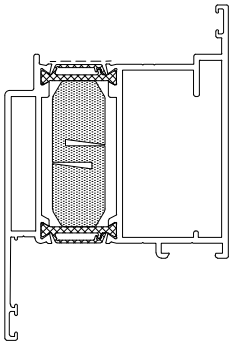

4 FULL LENGHT

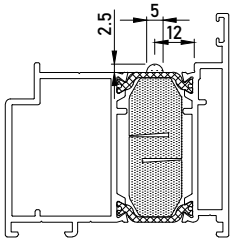

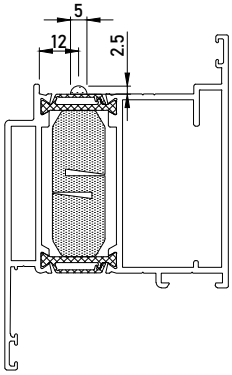

5

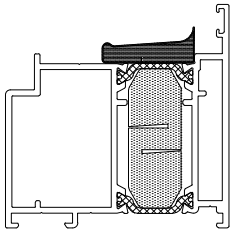

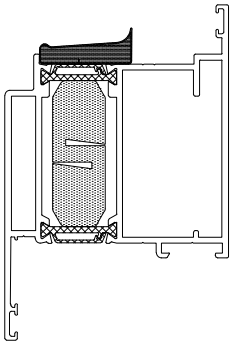

MONTAGEVOLGORDE
L 'ORDRE DE MONTAGE
THE ORDER OF ASSEMBLY
MONTAGEREIHENFOLGE
1 2 3 .

ASSEMBLY INSULATION GASKET (HI)

ASSEMBLY INSULATION GASKET 087.9940.04 / 087.9941.04

CS 77, MASTERLINE 8-Fu

5

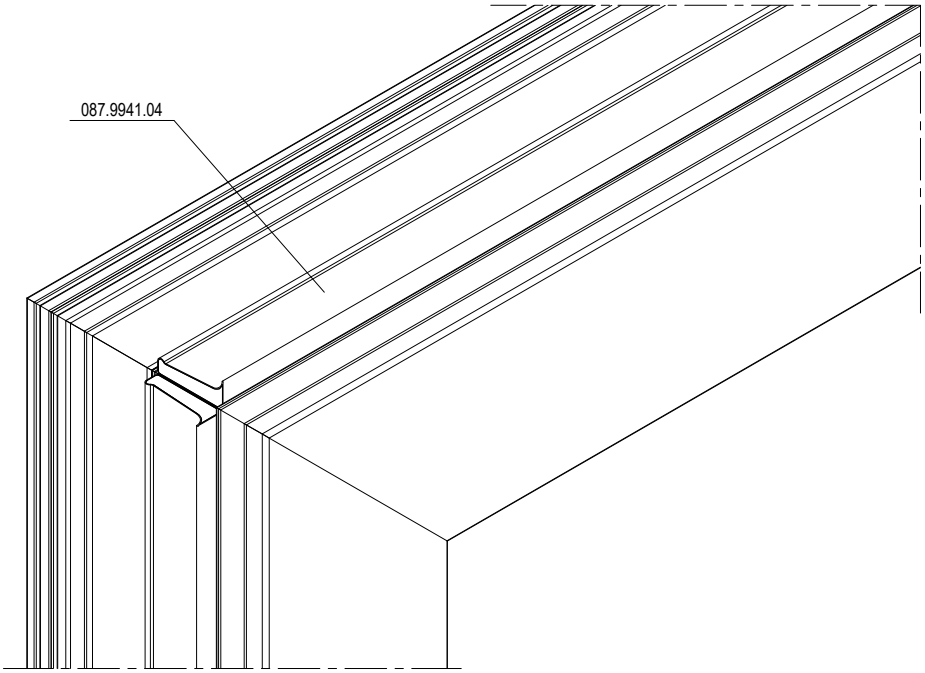

6

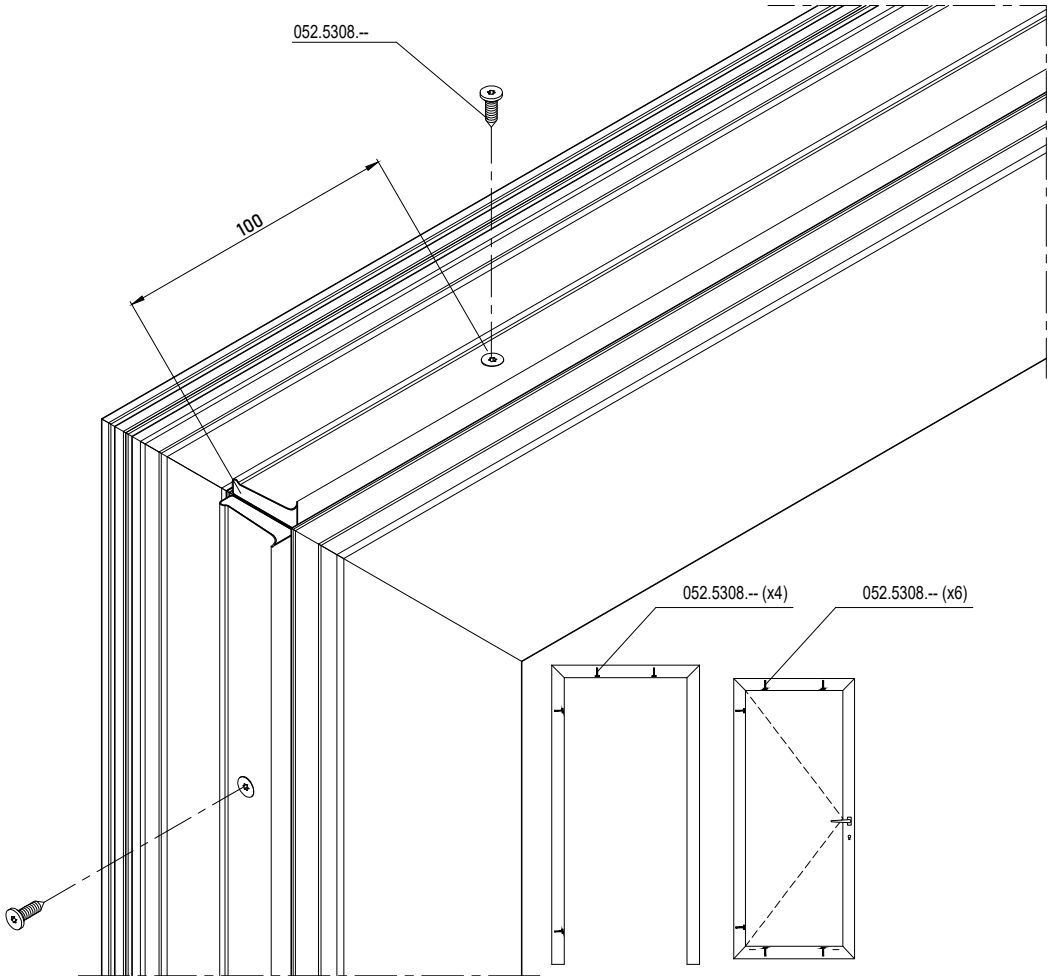

DOOR WEATHER STRIP INWARD OPENING

DOUBLE CASEMENT DOOR INWARD OPEN. WITH DOUBLE WEATHER STRIP - BOTTOM DOOR RAIL

MASTERLINE 8-Fu

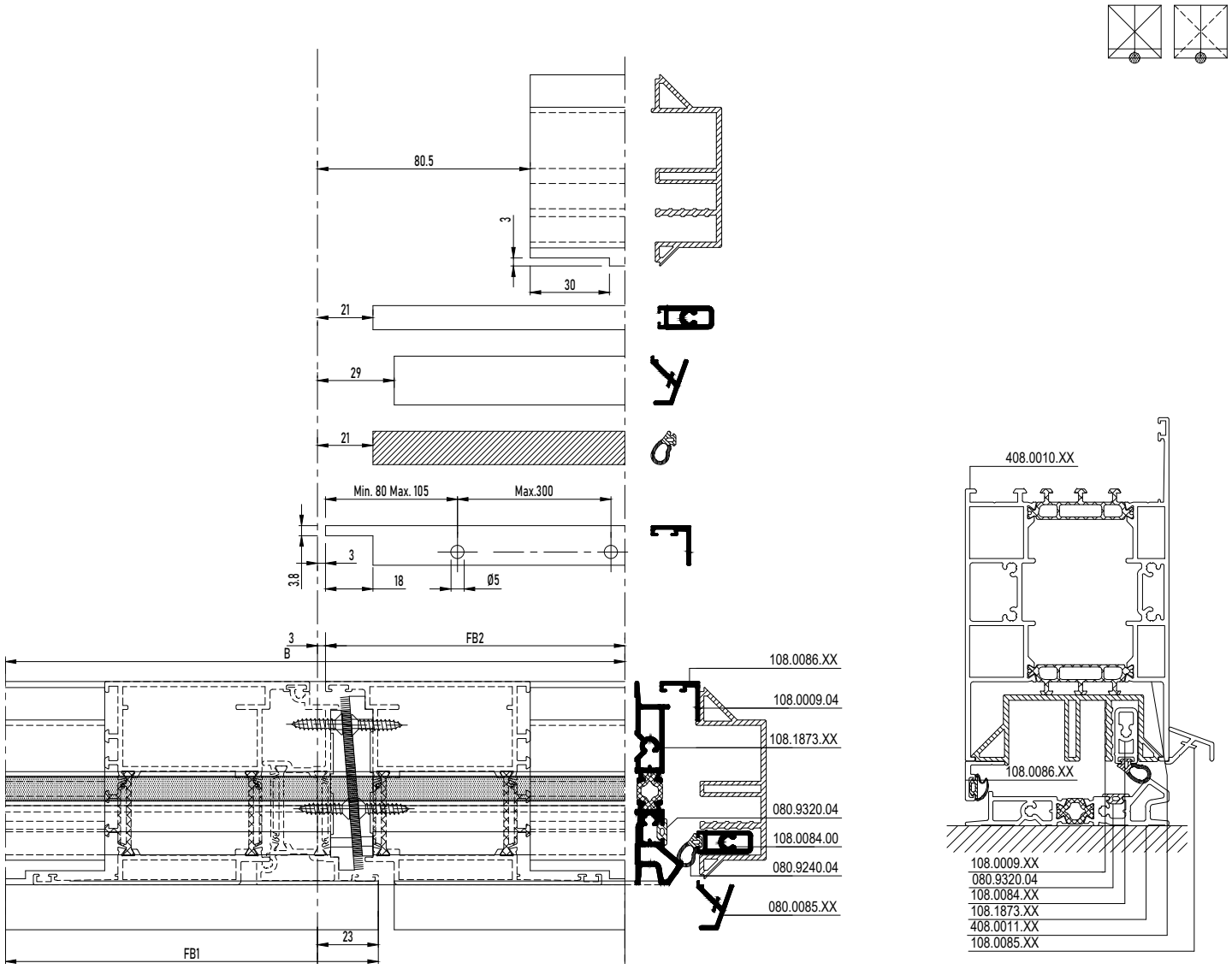

DOOR WEATHER STRIP INWARD OPENING

DOUBLE CASEMENT DOOR INWARD OPEN. WITH DOUBLE WEATHER STRIP - BOTTOM DOOR RAIL

MASTERLINE 8-Fu

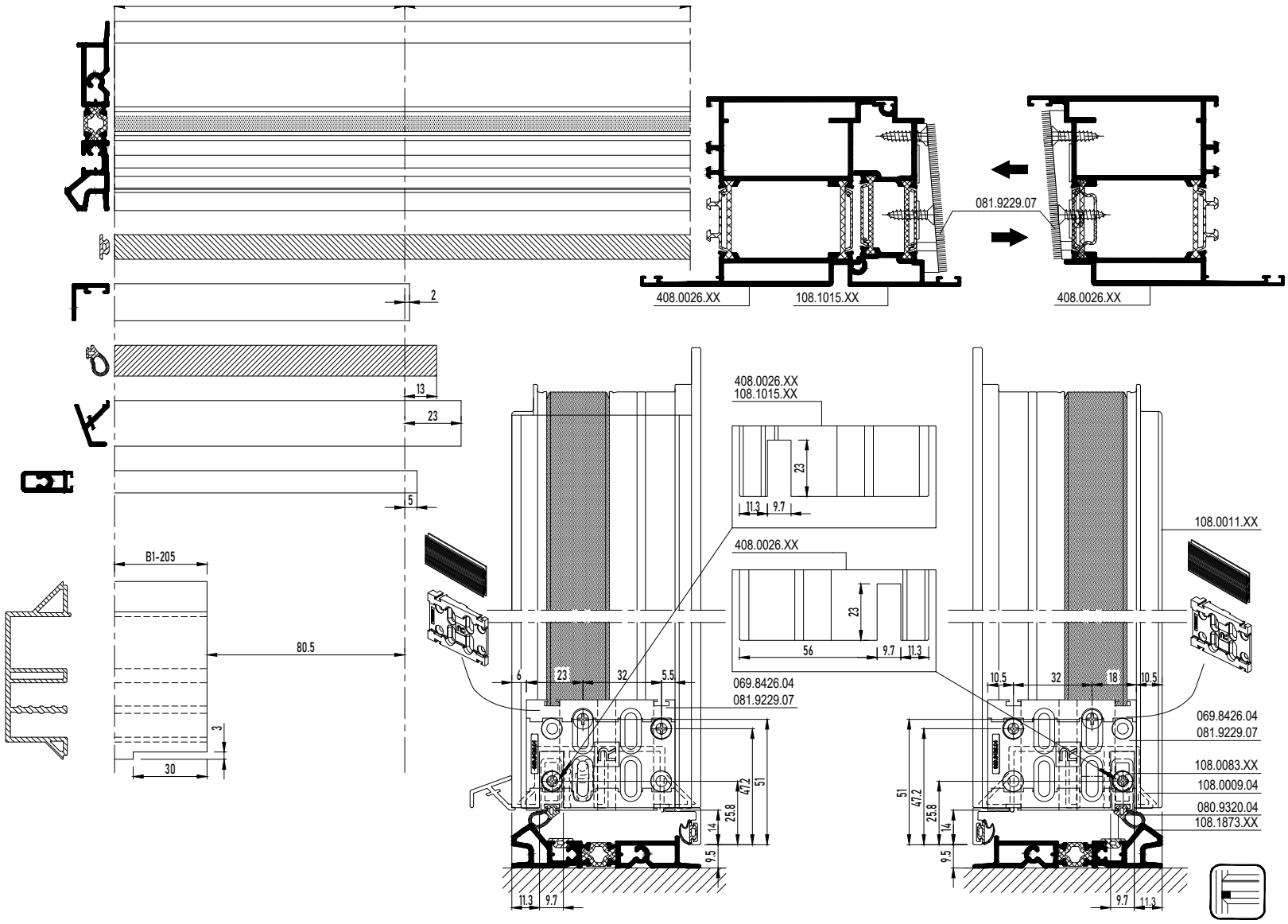

DOOR WEATHER STRIP INWARD OPENING

DOOR INWARD OPENING WITH DOUBLE WEATHER STRIP - BOTTOM DOOR RAIL

MASTERLINE 8-Fu

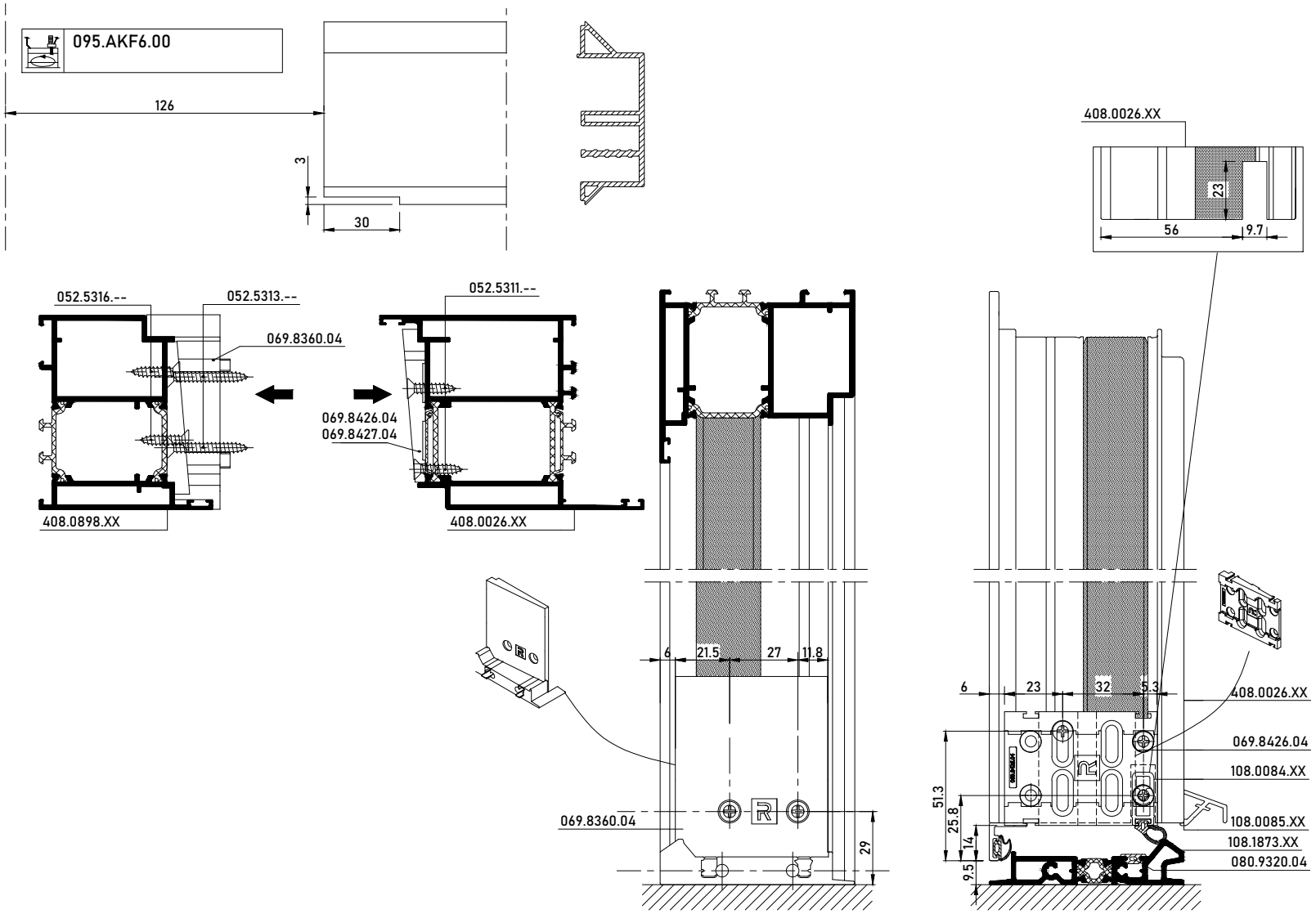

DOOR WEATHER STRIP INWARD OPENING

DOOR INWARD OPENING WITH DOUBLE WEATHER STRIP - BOTTOM DOOR RAIL

MASTERLINE 8-Fu

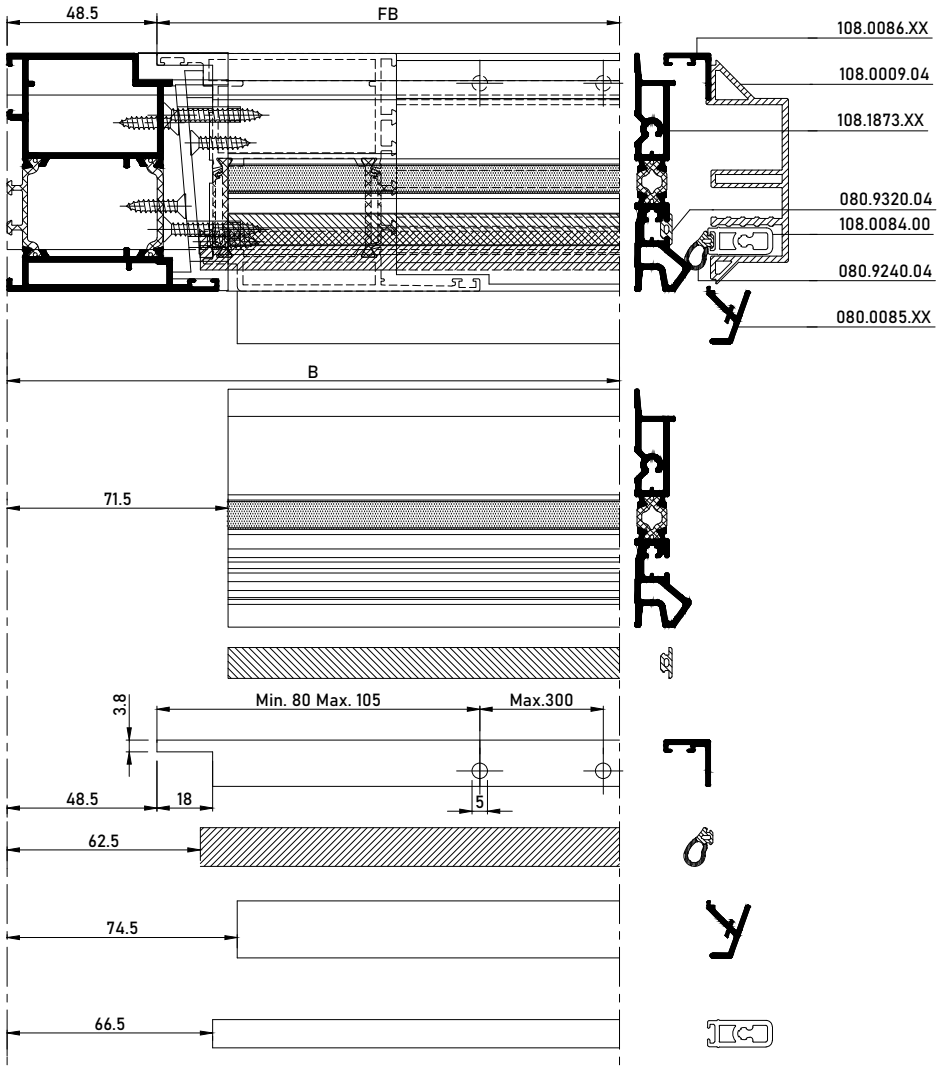

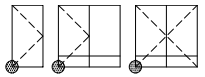

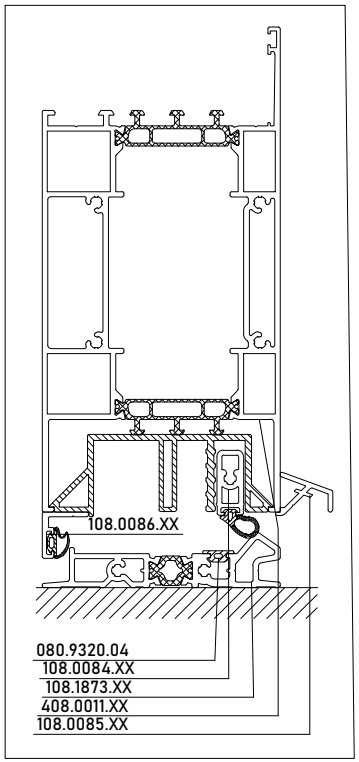

DOOR WEATHER STRIP INWARD OPENING

DOOR INWARD OPENING WITH DOUBLE WEATHER STRIP - BOTTOM DOOR RAIL

MASTERLINE 8-Fu

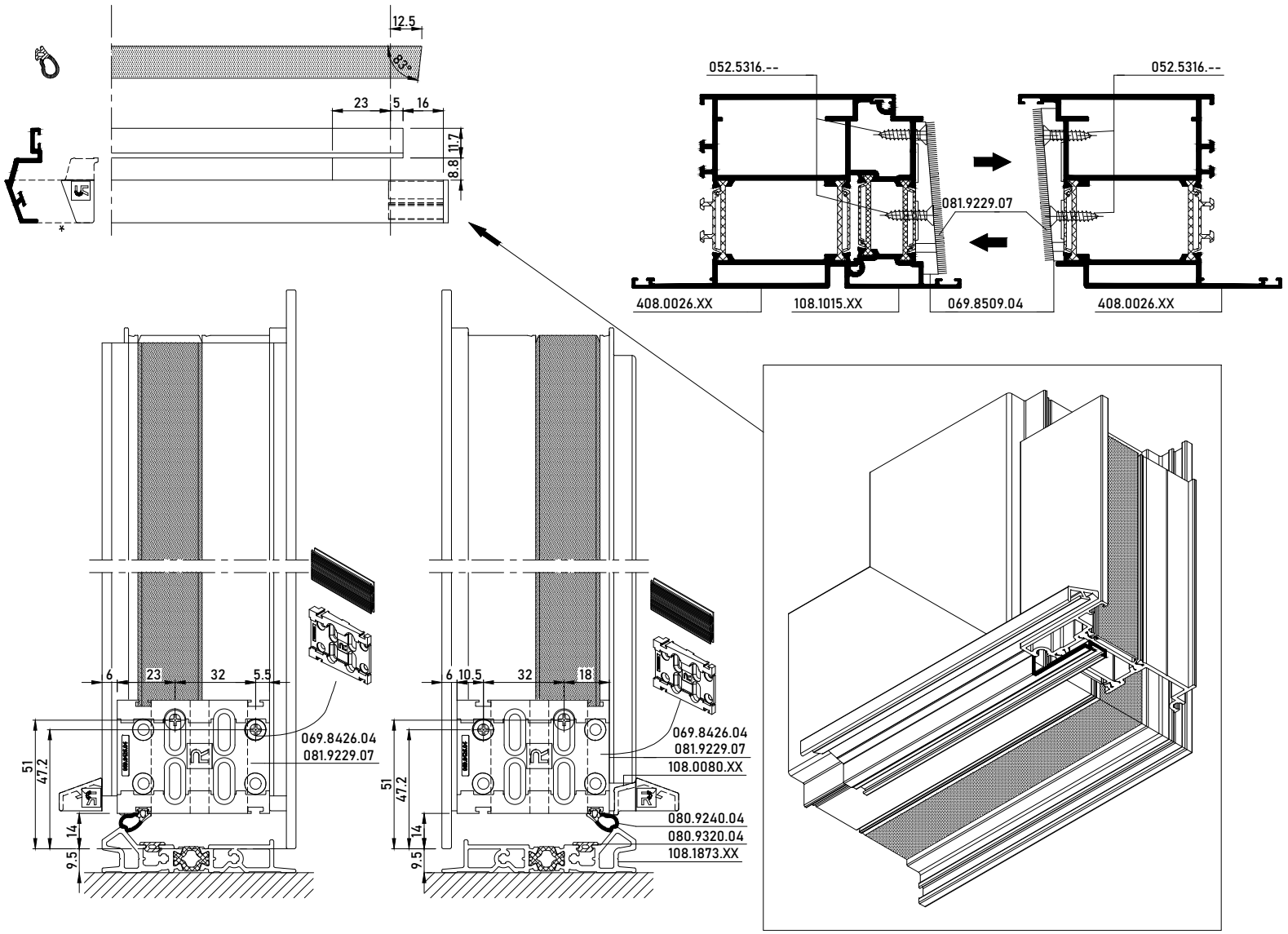

DOOR WEATHER STRIP INWARD OPENING

DOOR INWARD OPENING WITH DOUBLE WEATHER STRIP - BOTTOM DOOR RAIL

MASTERLINE 8-Fu

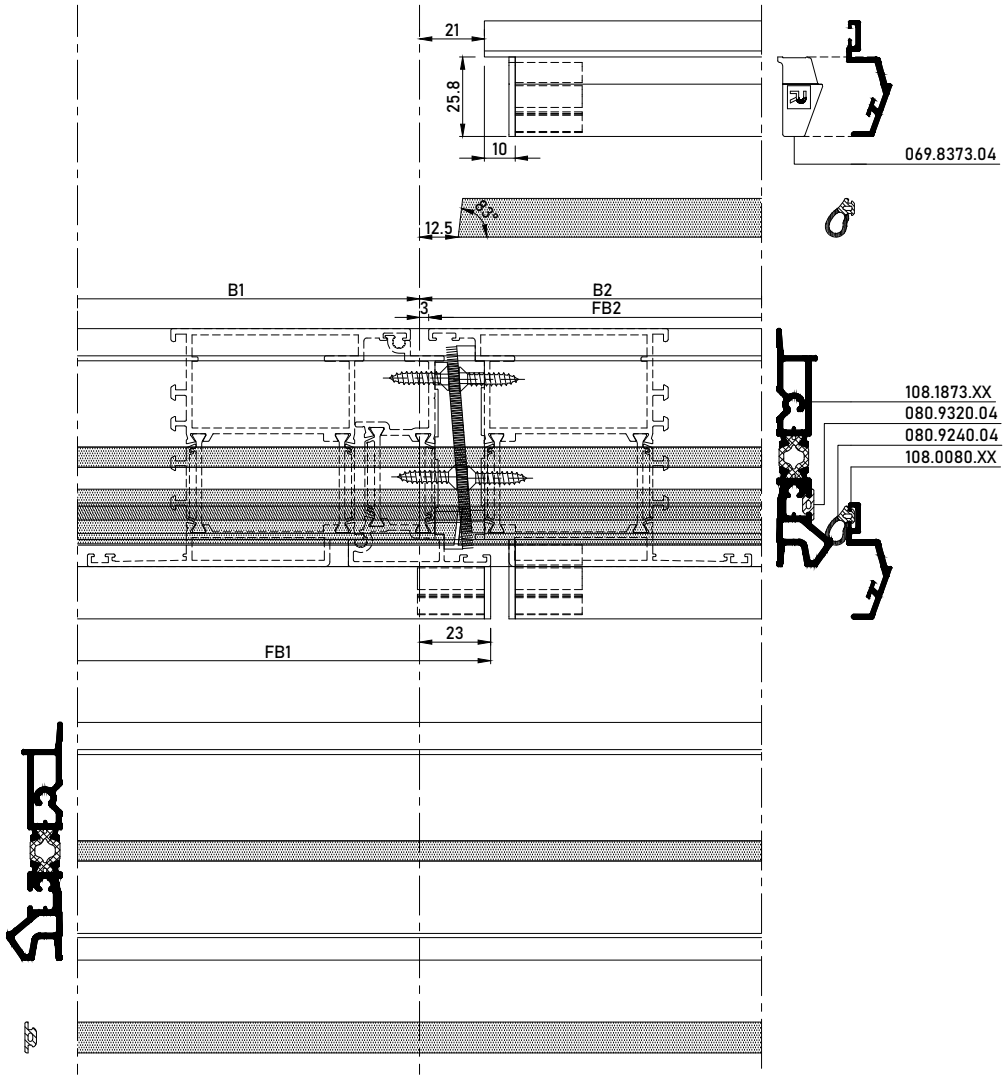

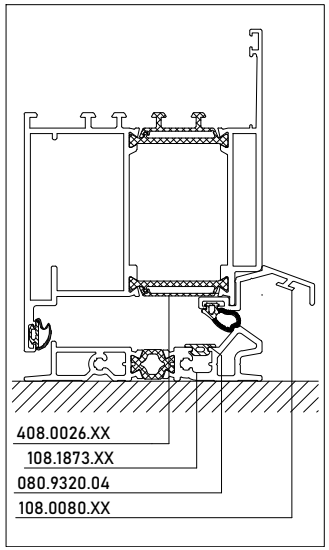

DOOR WEATHER STRIP INWARD OPENING

DOOR INWARD OPENING WITH DOUBLE WEATHER STRIP - BOTTOM DOOR RAIL

MASTERLINE 8-Fu

095.AKF6.00

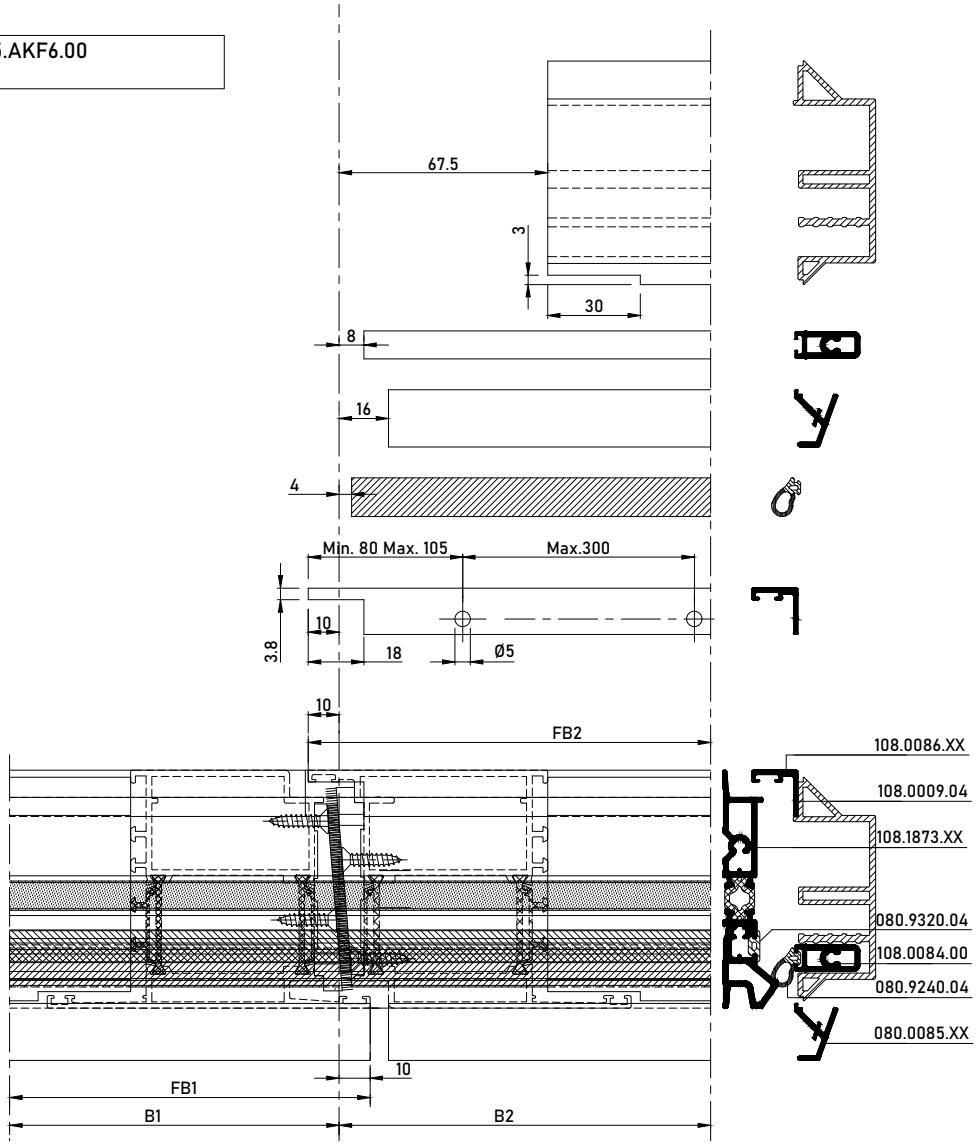

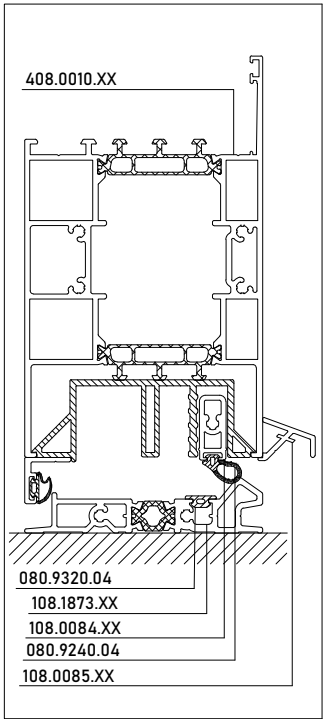

DOOR WEATHER STRIP INWARD OPENING

DOOR INWARD OPENING WITH DOUBLE WEATHER STRIP - BOTTOM DOOR RAIL

MASTERLINE 8-Fu

095.AKF6.00

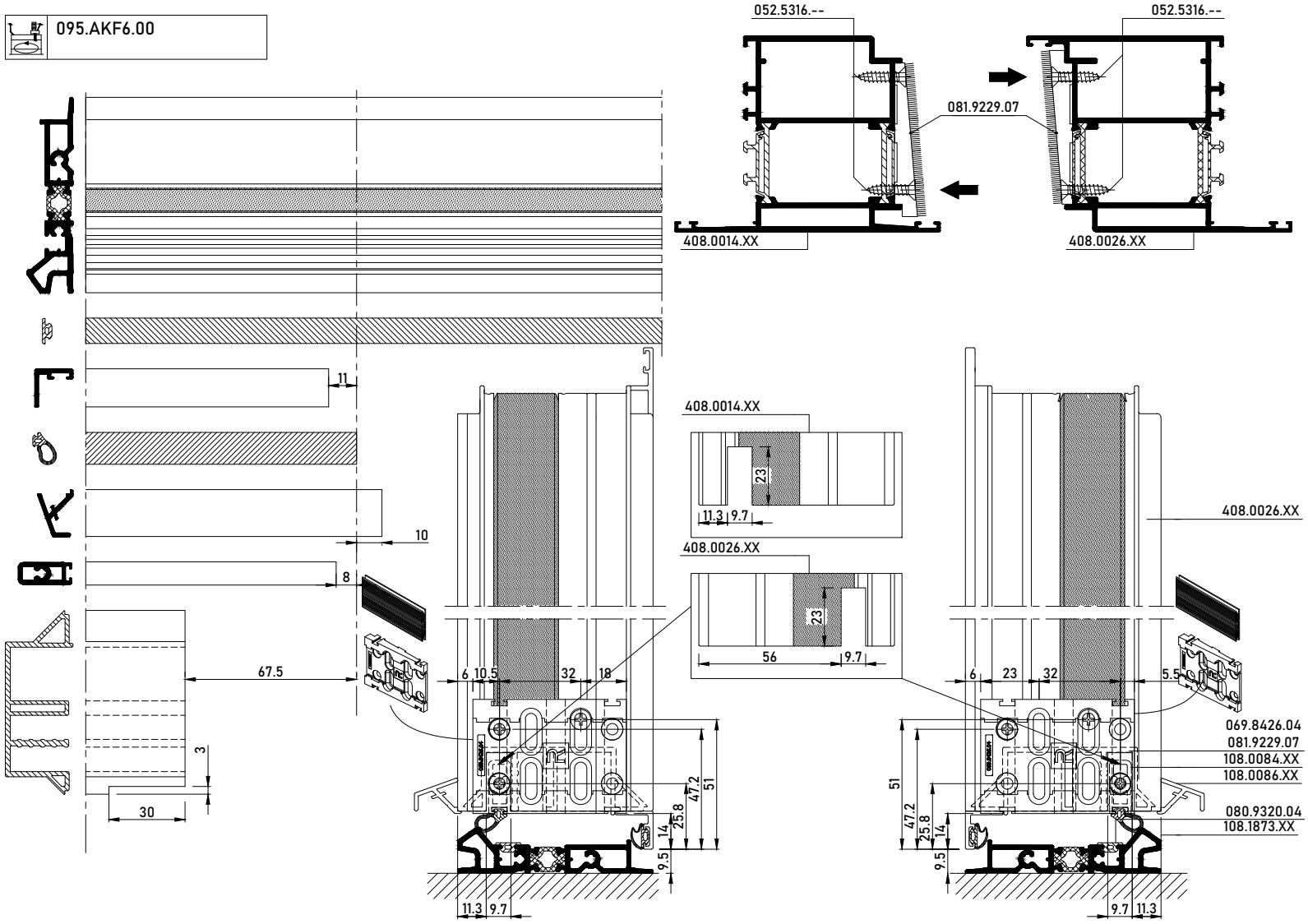

DOOR WEATHER STRIP INWARD OPENING

DOOR INWARD OPENING WITH DOUBLE WEATHER STRIP

MASTERLINE 8-FP, MASTERLINE 8-Fu

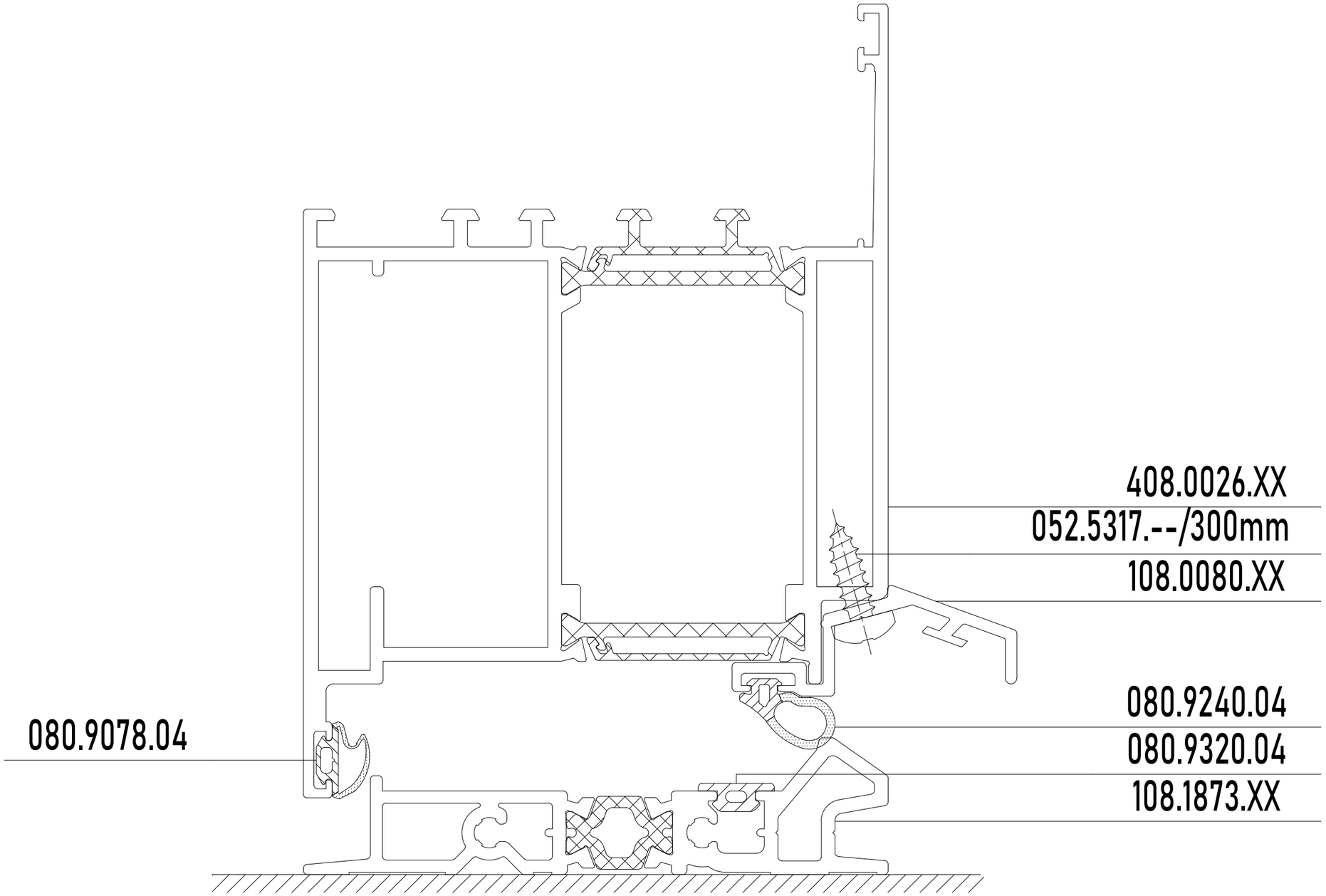

DOOR WEATHER STRIP INWARD OPENING

DOOR INWARD OPENING WITH DOUBLE WEATHER STRIP

MASTERLINE 8-Fu

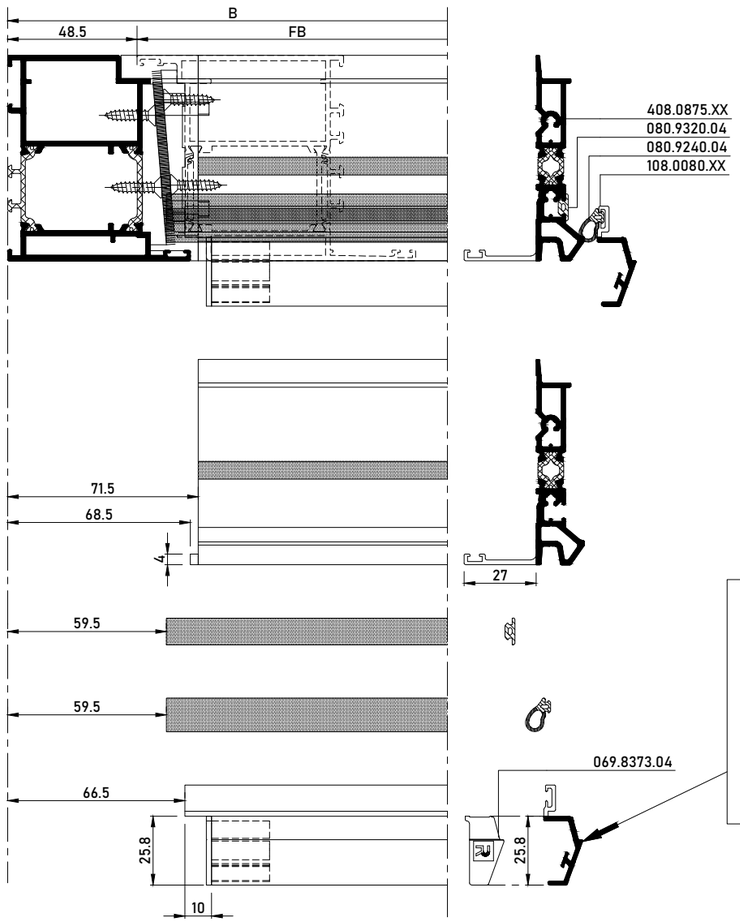

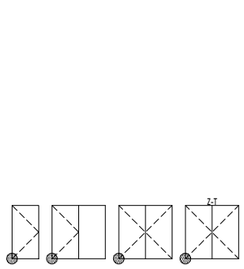

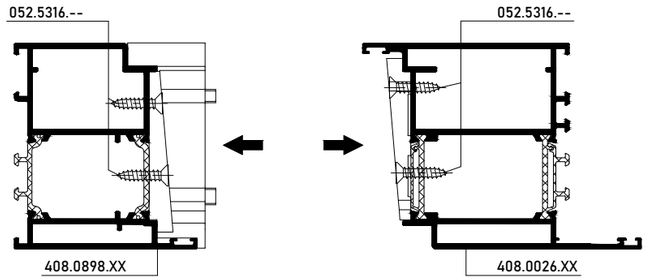

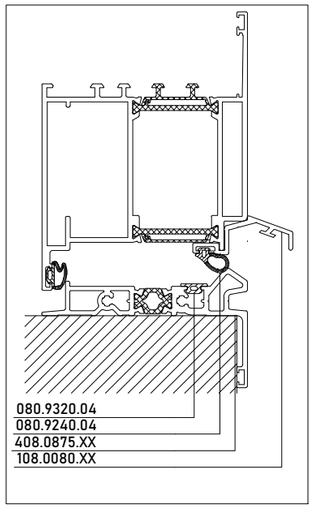

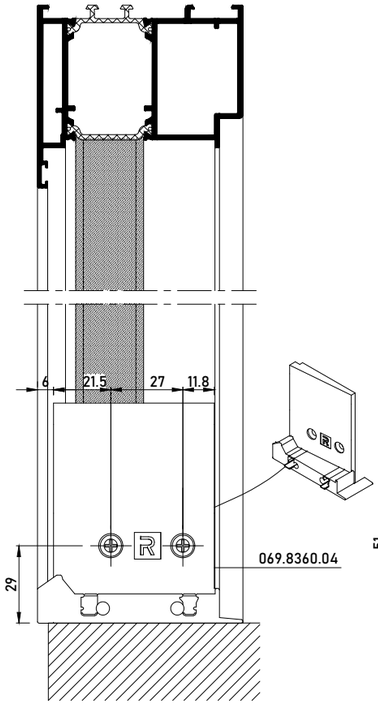

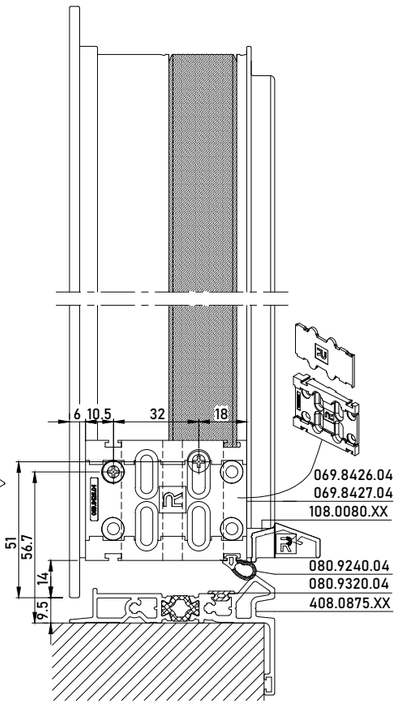

DOOR WEATHER STRIP INWARD OPENING

DOOR INWARD OPENING WITH DOUBLE WEATHER STRIP

MASTERLINE 8-Fu

OPTIE A / OPTION A

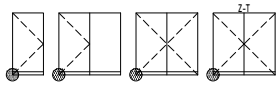

R	REYNAPROTECTOR REYNAPROTECTOR REYNAPROTECTOR REYNAPROTECTOR
X	DICHTINGSMIDDEL MATIERE D'ETANCHEITE SEALING AGENT ABDICHTUNG

Verwijderen
Supprimer
Remove
Löschen

DOOR WEATHER STRIP INWARD OPENING

DOOR INWARD OPENING WITH DOUBLE WEATHER STRIP

MASTERLINE 8-Fu

OPTIE B / OPTION B

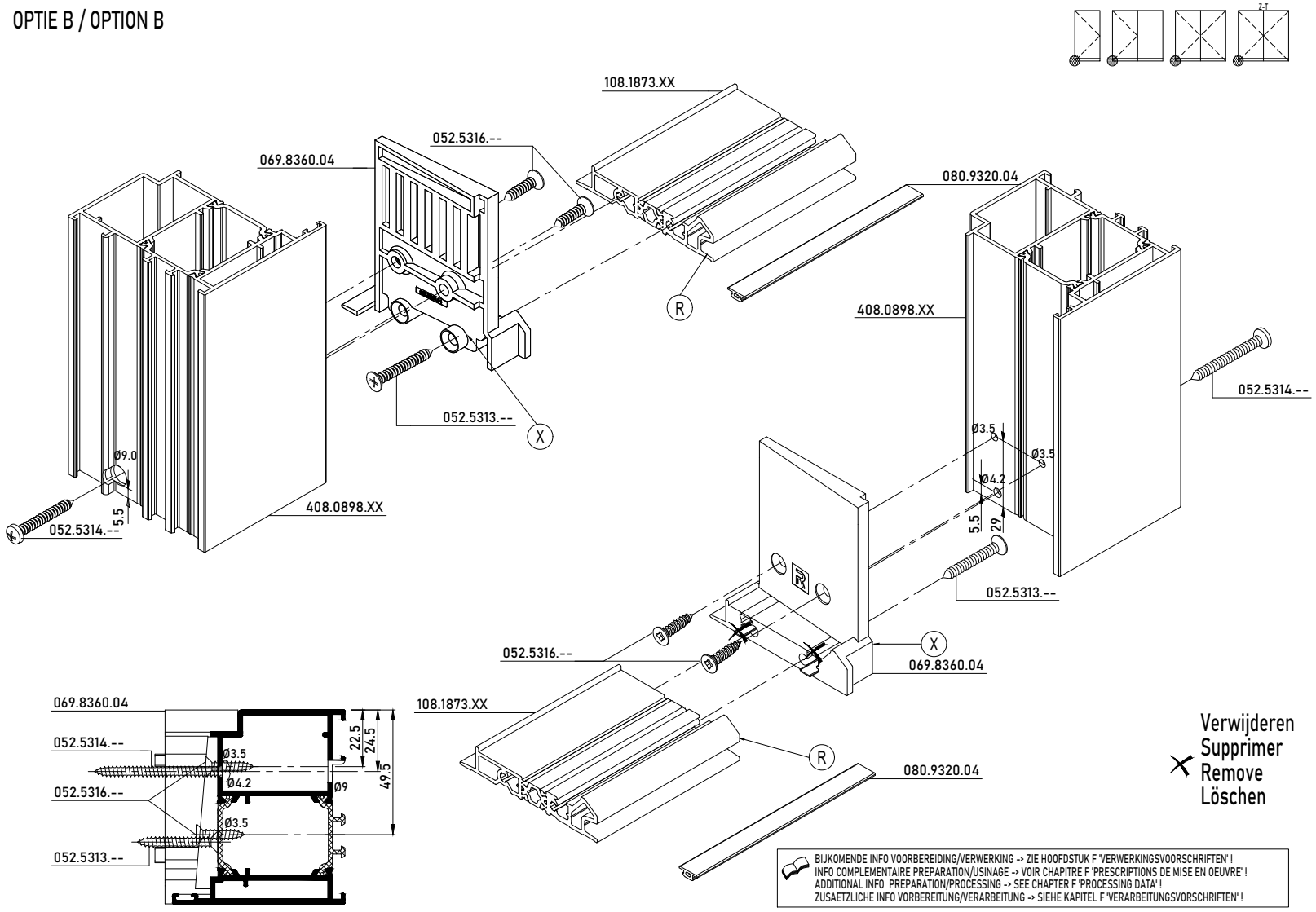

COMBINED DOOR WEATHER STRIP INWARD OPENING

COMBINED DOOR INWARD OPENING WITH DOUBLE WEATHER STRIP - BOTTOM DOOR RAIL

MASTERLINE 8-Fu

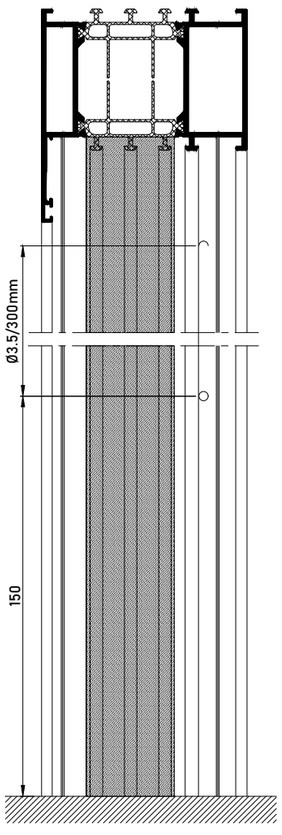

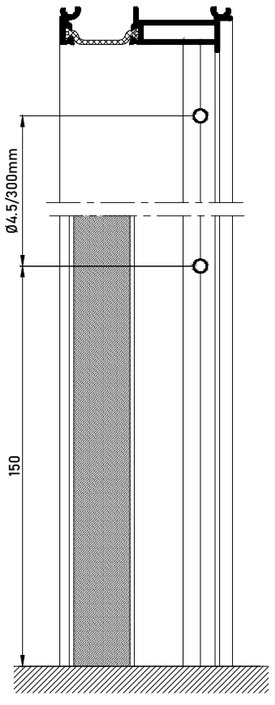

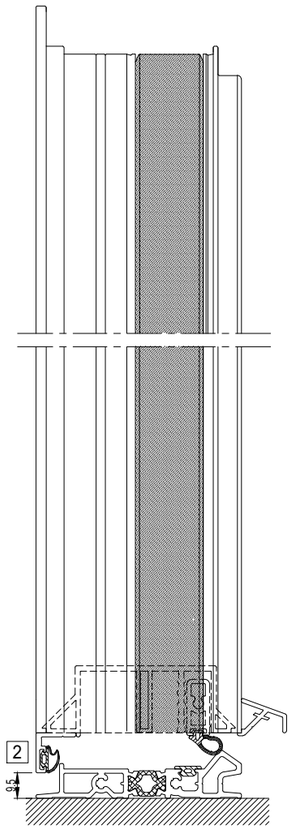

MONTAGEVOLGORDE
L 'ORDRE DE MONTAGE
THE ORDER OF ASSEMBLY
MONTAGEREIHENFOLGE

1 2 3 .

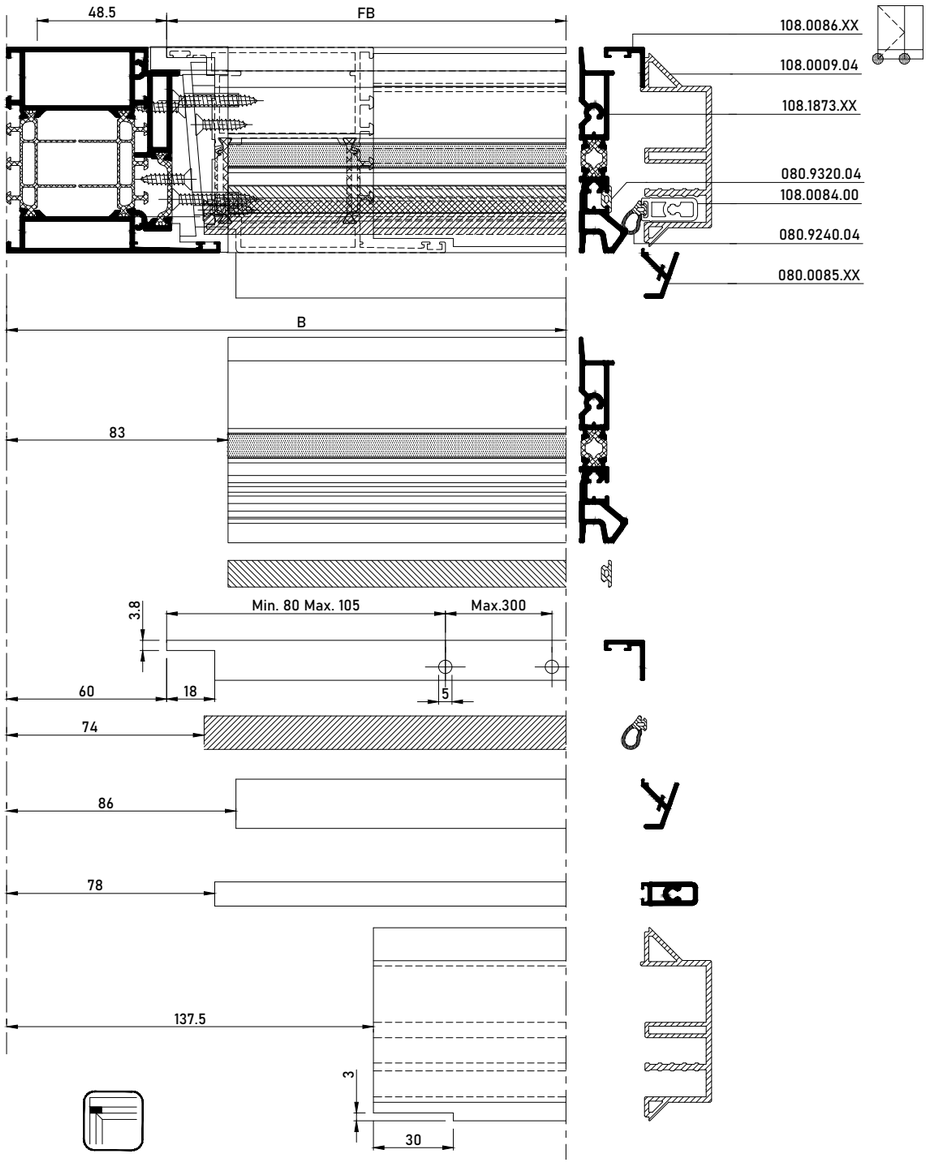

COMBINED DOOR WEATHER STRIP INWARD OPENING

COMBINED DOOR INWARD OPENING WITH DOUBLE WEATHER STRIP - BOTTOM DOOR RAIL

MASTERLINE 8-Fu

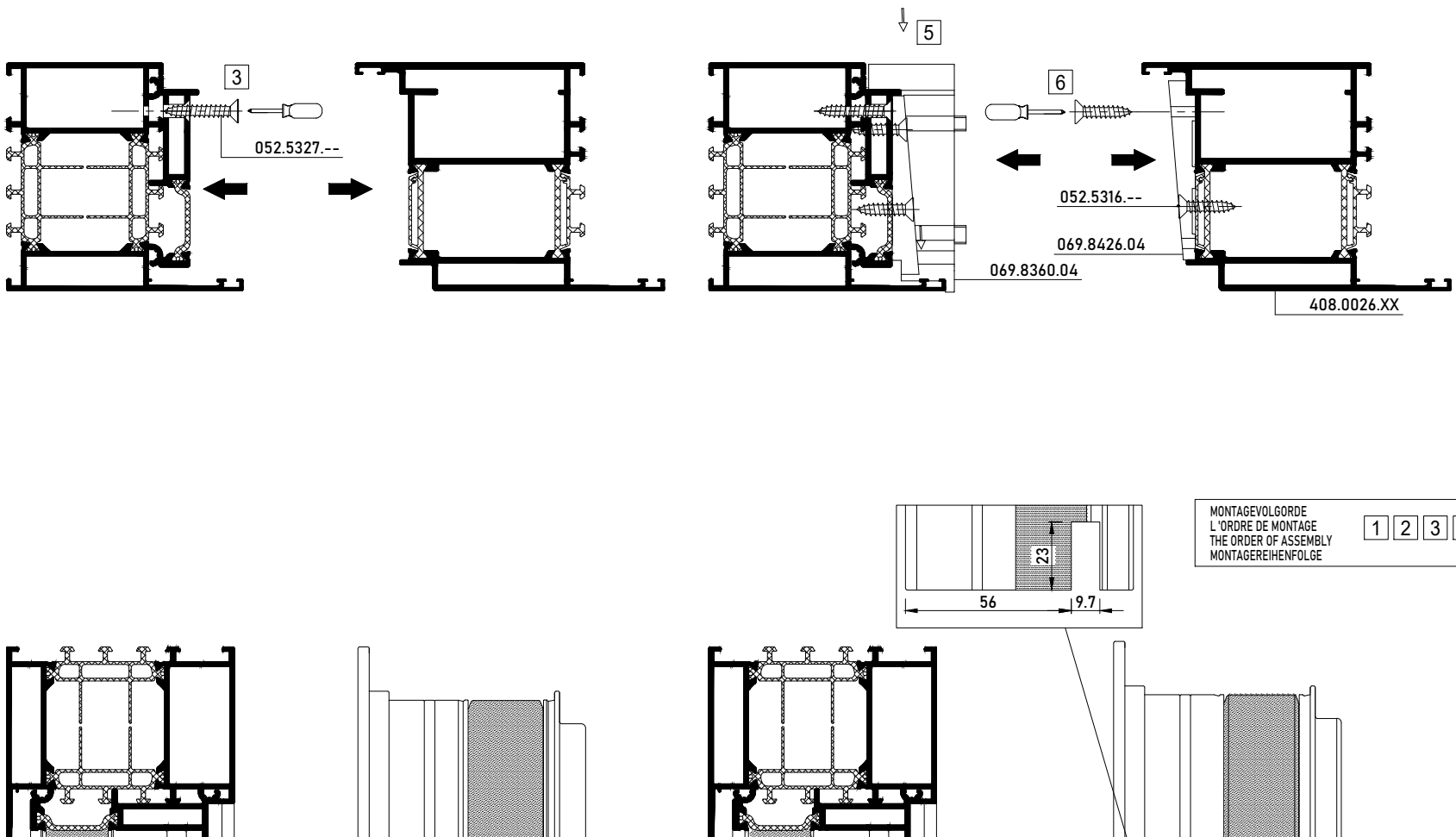

COMBINED DOOR WEATHER STRIP INWARD OPENING

COMBINED DOOR INWARD OPENING WITH DOUBLE WEATHER STRIP

MASTERLINE 8-Fu

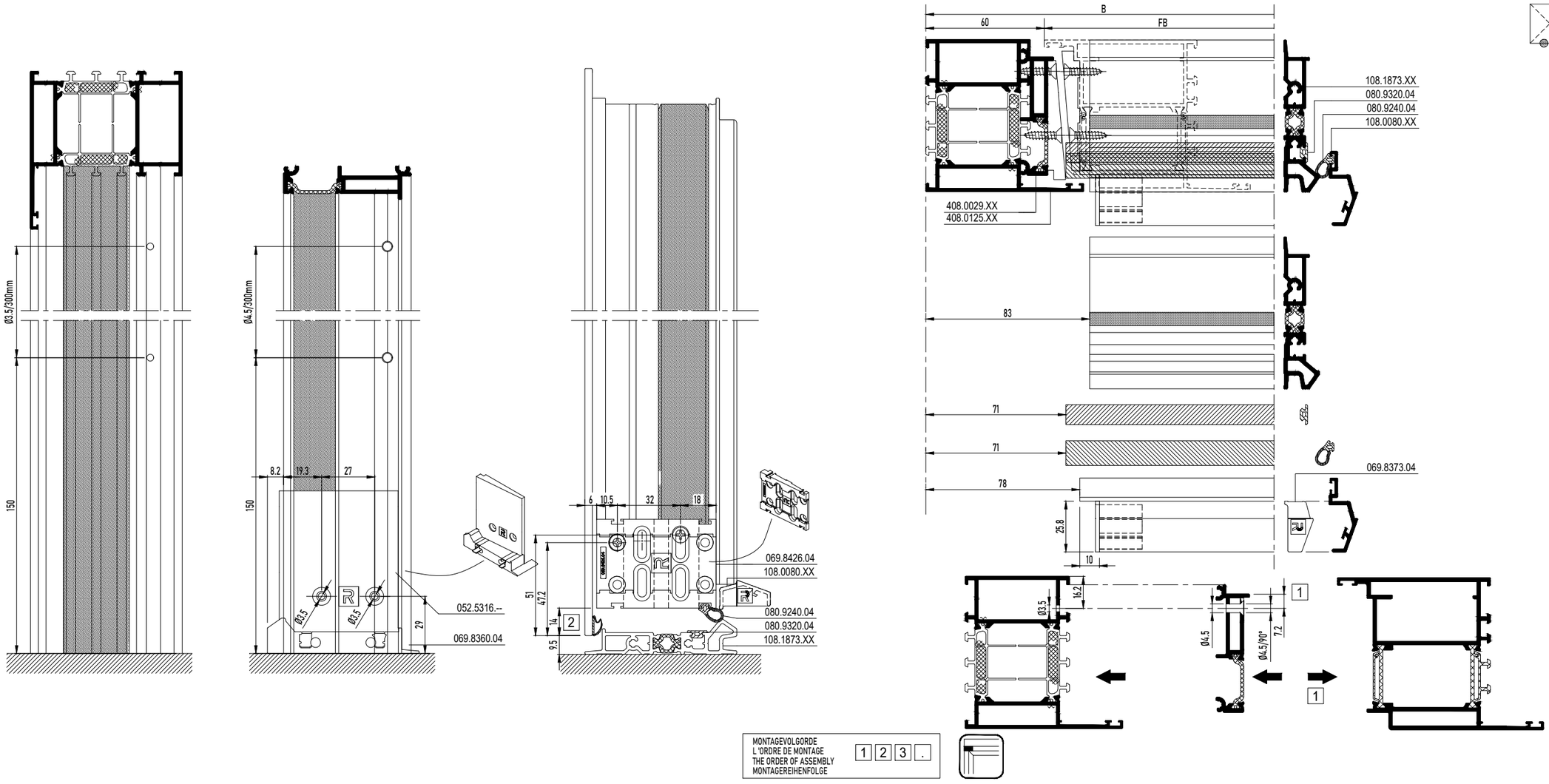

COMBINED DOOR WEATHER STRIP INWARD OPENING

COMBINED DOOR INWARD OPENING WITH DOUBLE WEATHER STRIP

MASTERLINE 8-Fu

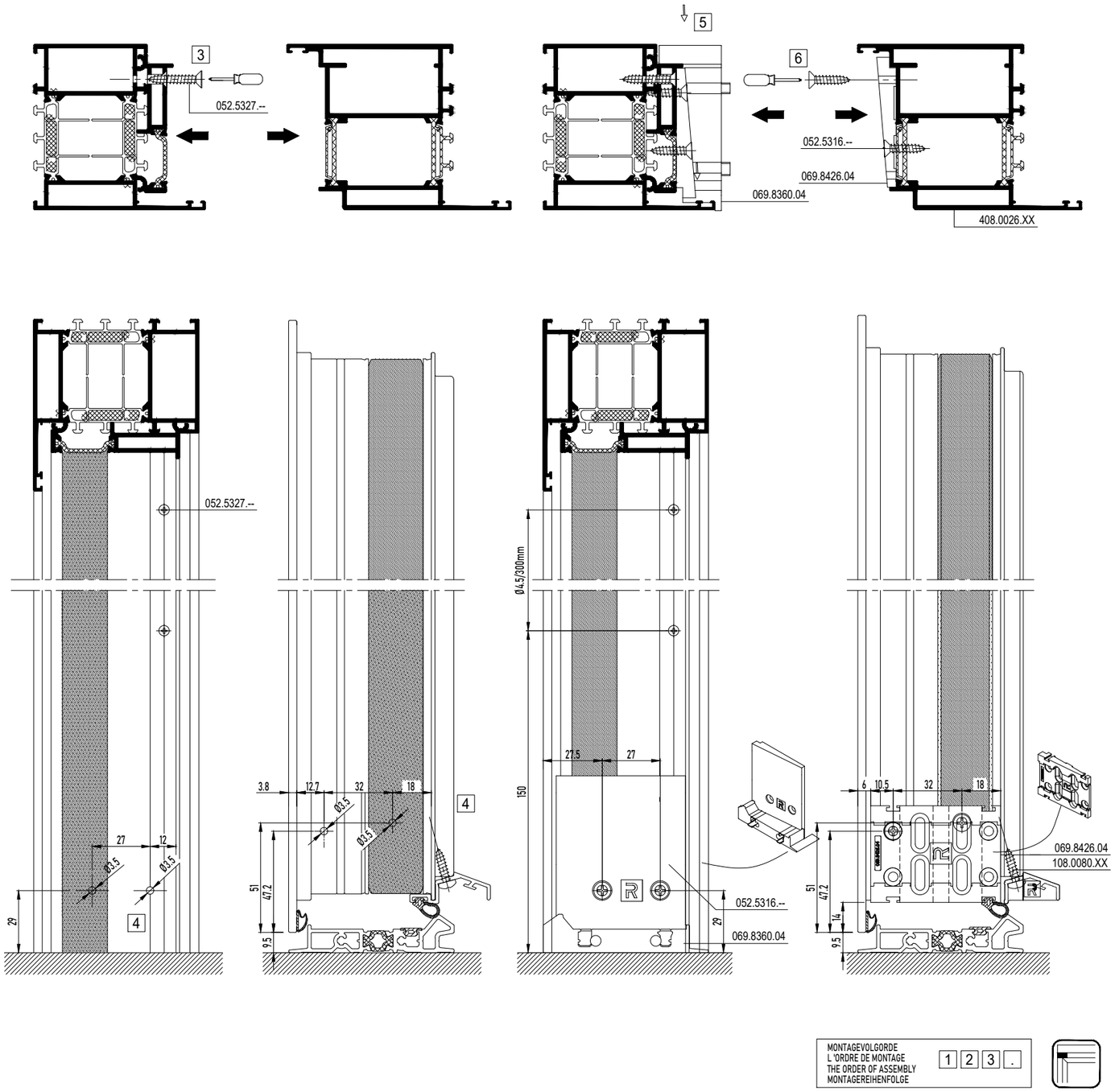

DOOR AUTOMATIC SEALING INWARD OPENING

DOOR INW. OPEN. WITH DOOR LATCH

MASTERLINE 8-Fu

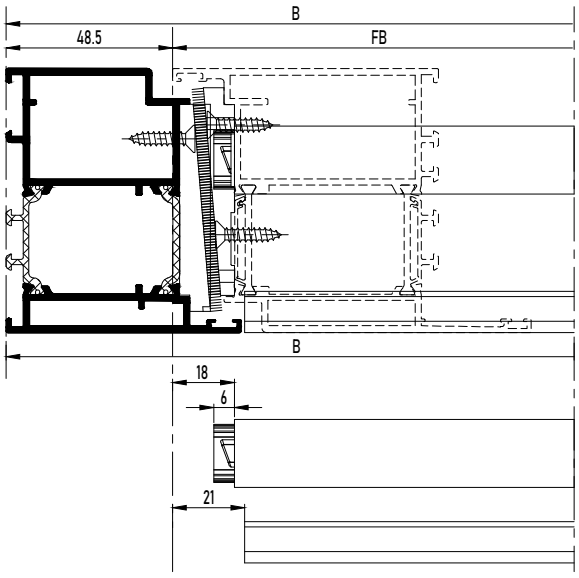

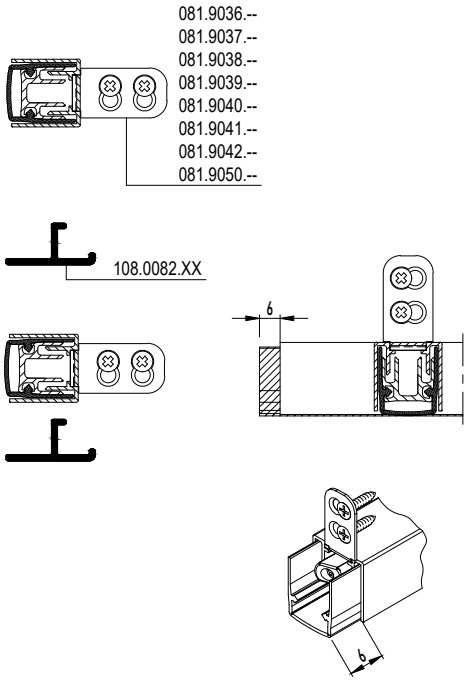

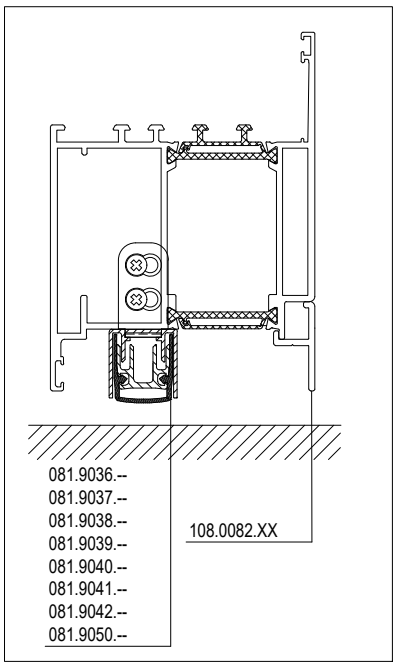

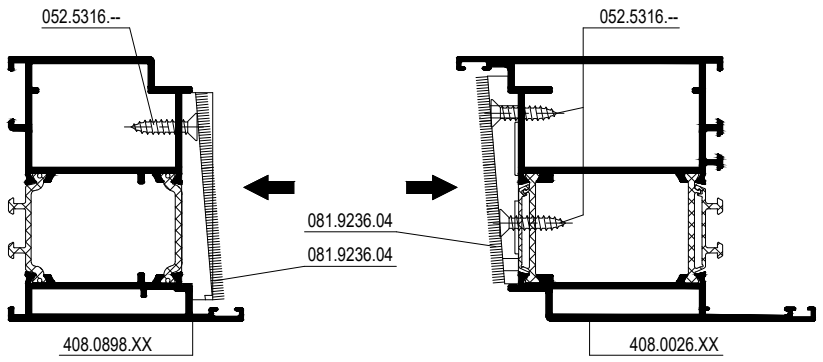

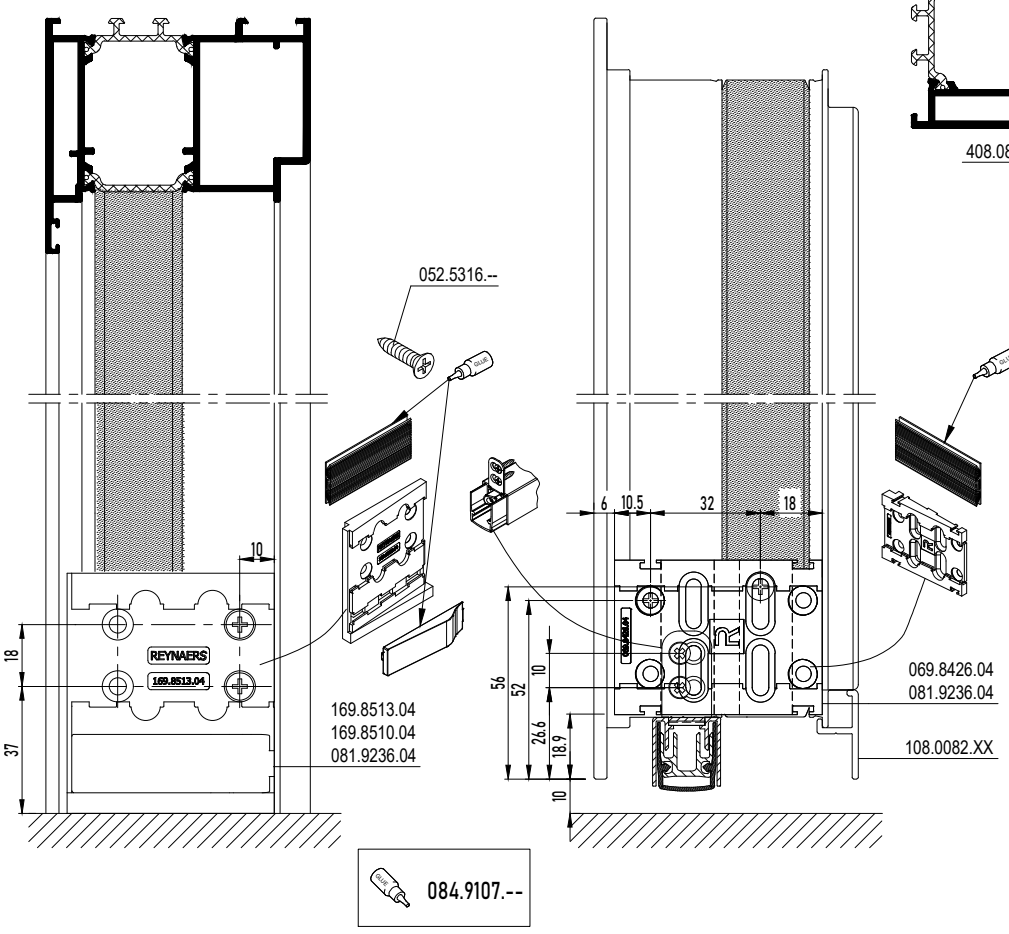

DOOR AUTOMATIC SEALING INWARD OPENING

DOOR INW. OPEN. WITH DOOR LATCH

MASTERLINE 8-Fu

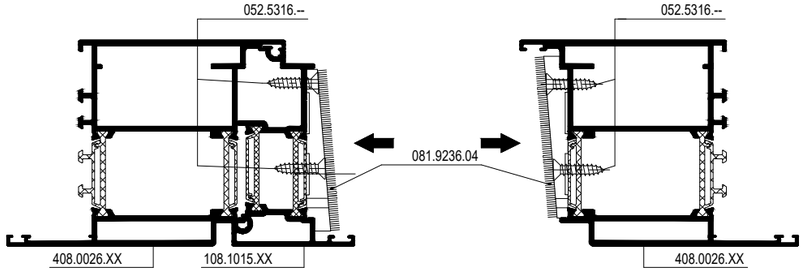

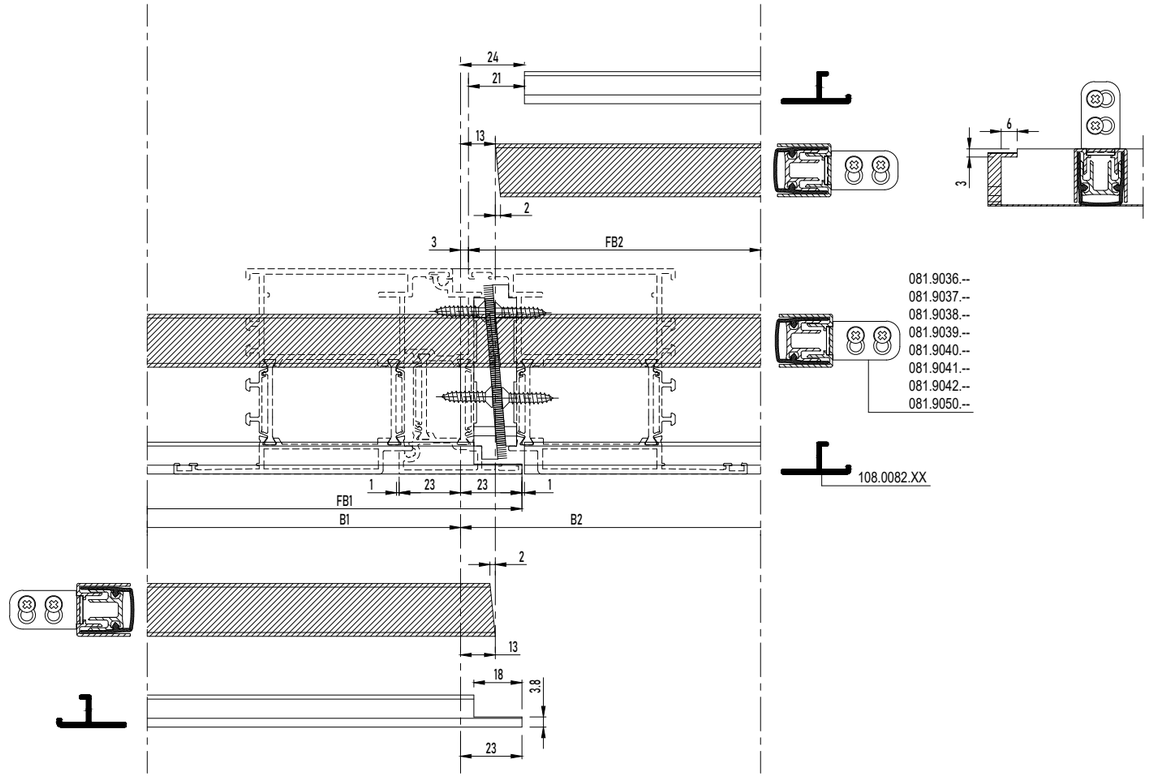

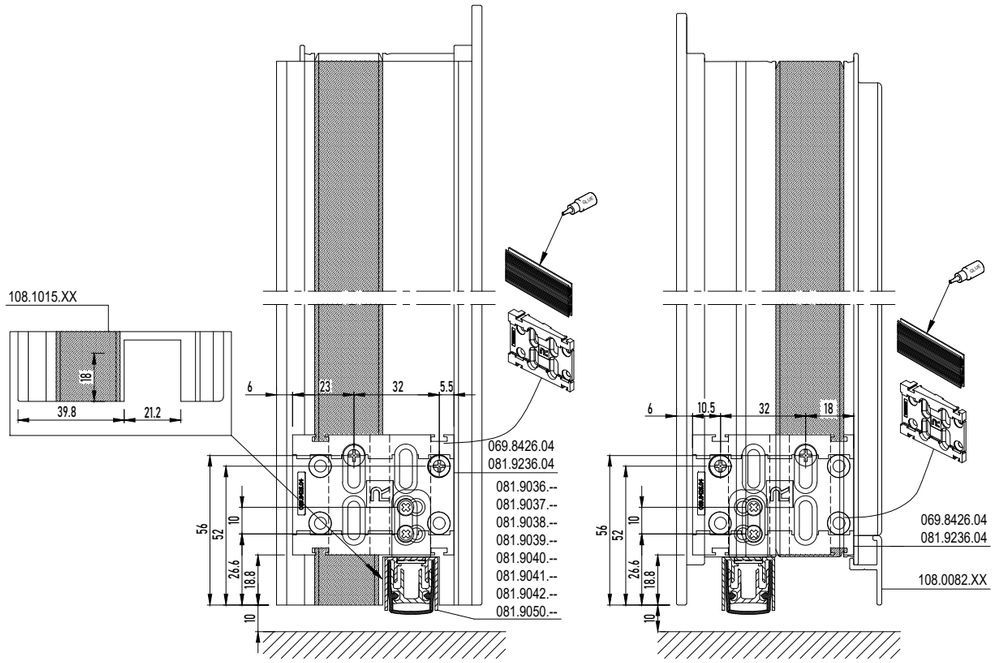





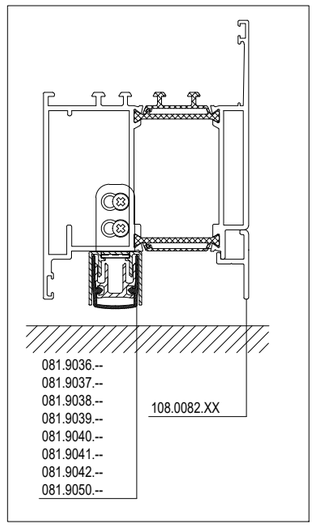

DOOR AUTOMATIC SEALING INWARD OPENING

DOOR INW. OPEN. WITH DOOR LATCH

MASTERLINE 8-Fu

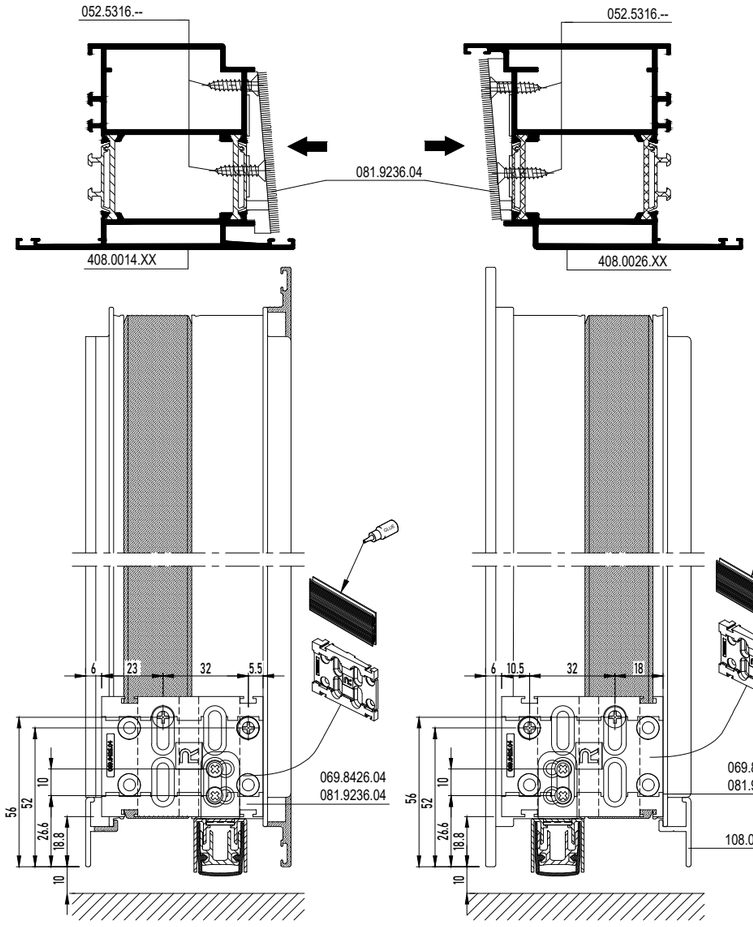

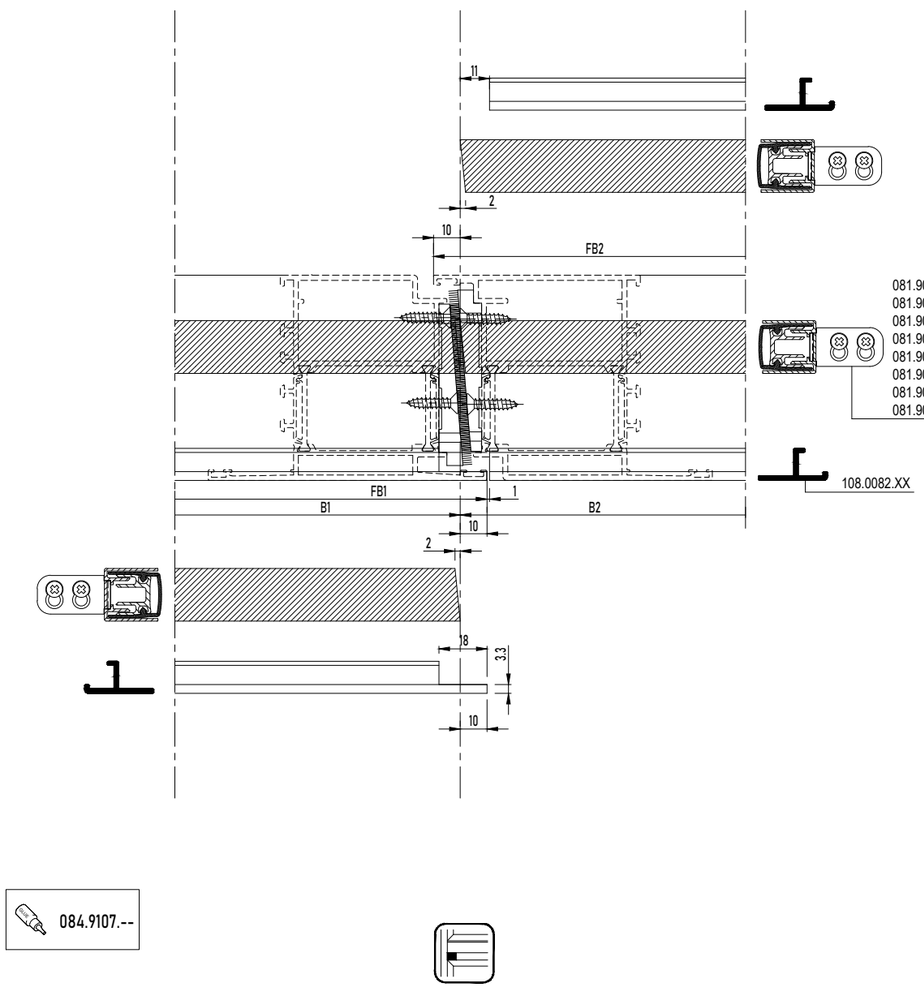

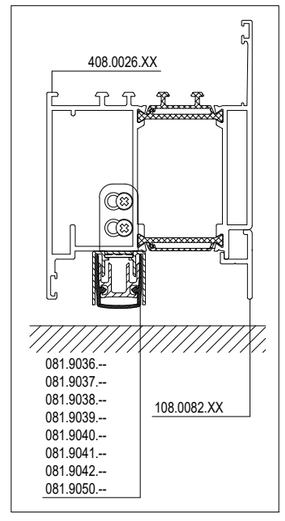

DOOR AUTOMATIC SEALING INWARD OPENING

DOOR INWARD OPENING WITH AUTOMATIC DRAUGHT EXCLUDER - BOTTOM DOOR RAIL

MASTERLINE 8-Fu

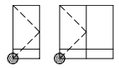

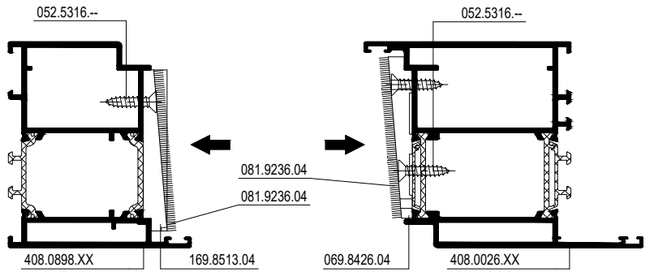

095.AKF6.00

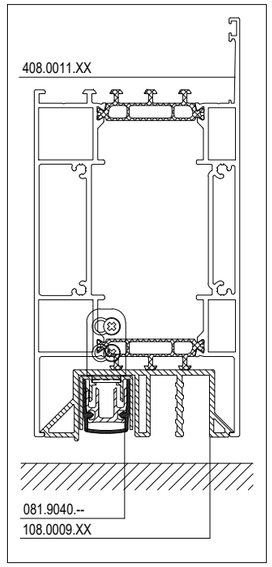

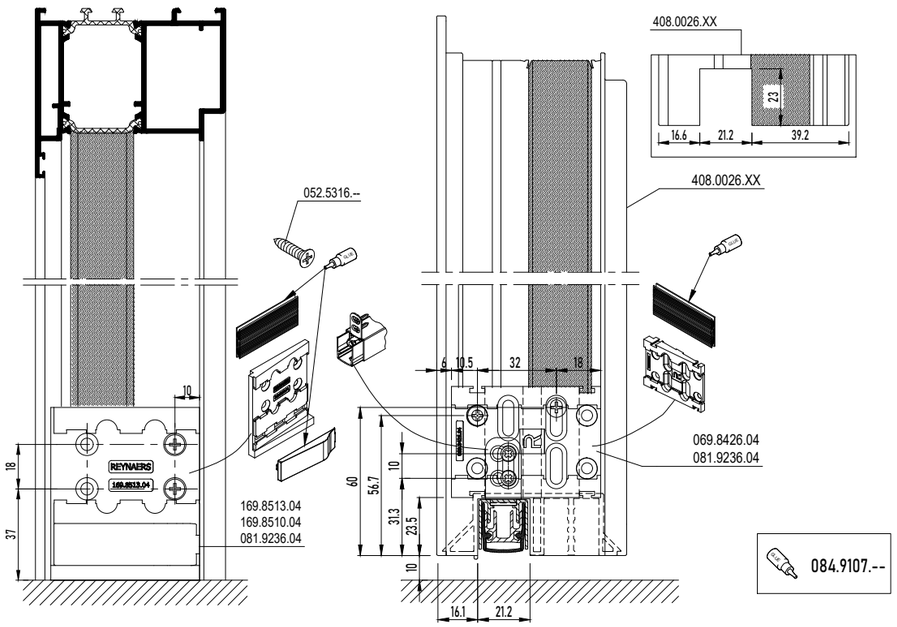

084.9107.--

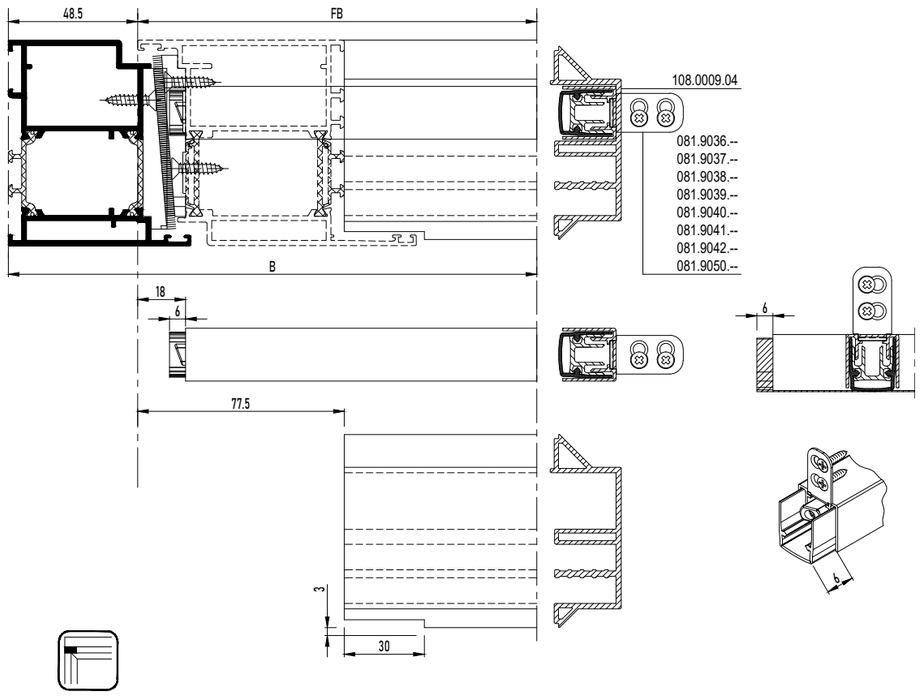

DOOR AUTOMATIC SEALING INWARD OPENING

DOOR INWARD OPENING WITH AUTOMATIC DRAUGHT EXCLUDER - BOTTOM DOOR RAIL

MASTERLINE 8-Fu

095.AKF6.00

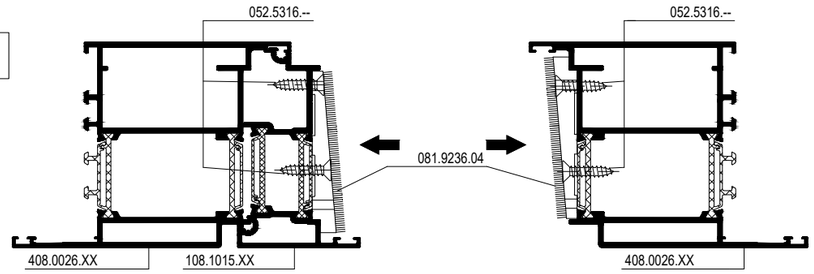

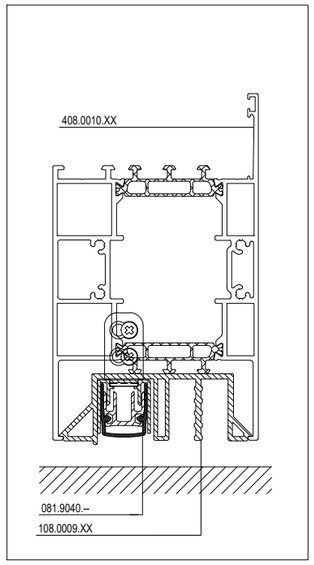

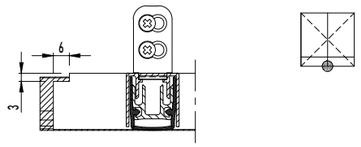

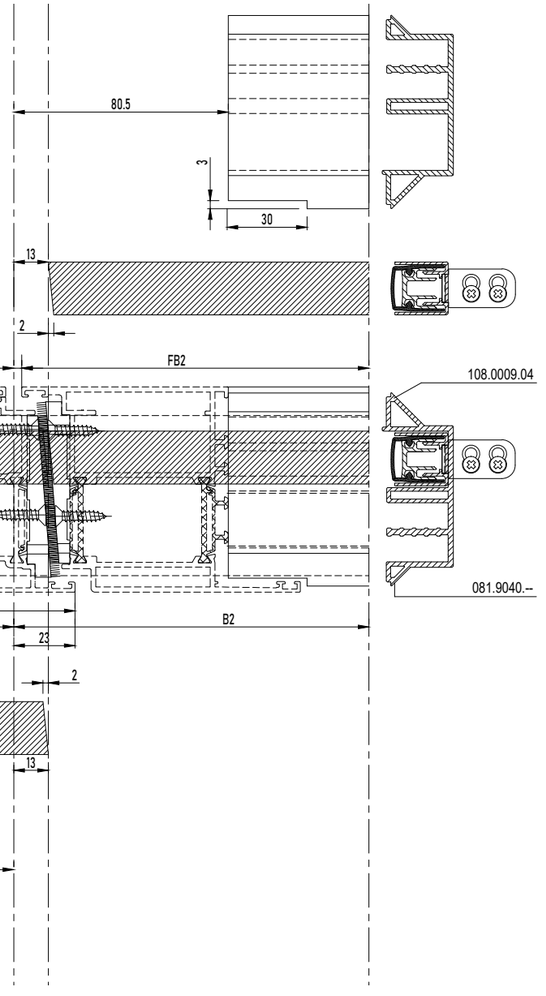

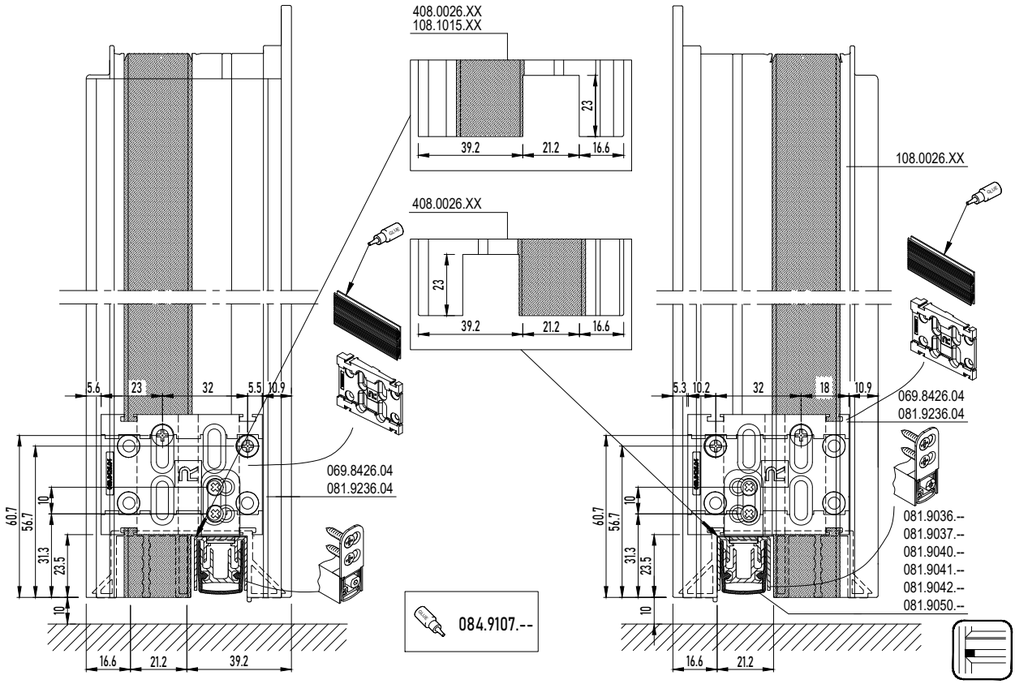

DOOR AUTOMATIC SEALING INWARD OPENING

DOOR INWARD OPENING WITH AUTOMATIC DRAUGHT EXCLUDER - BOTTOM DOOR RAIL

MASTERLINE 8-Fu

095.AKF6.00

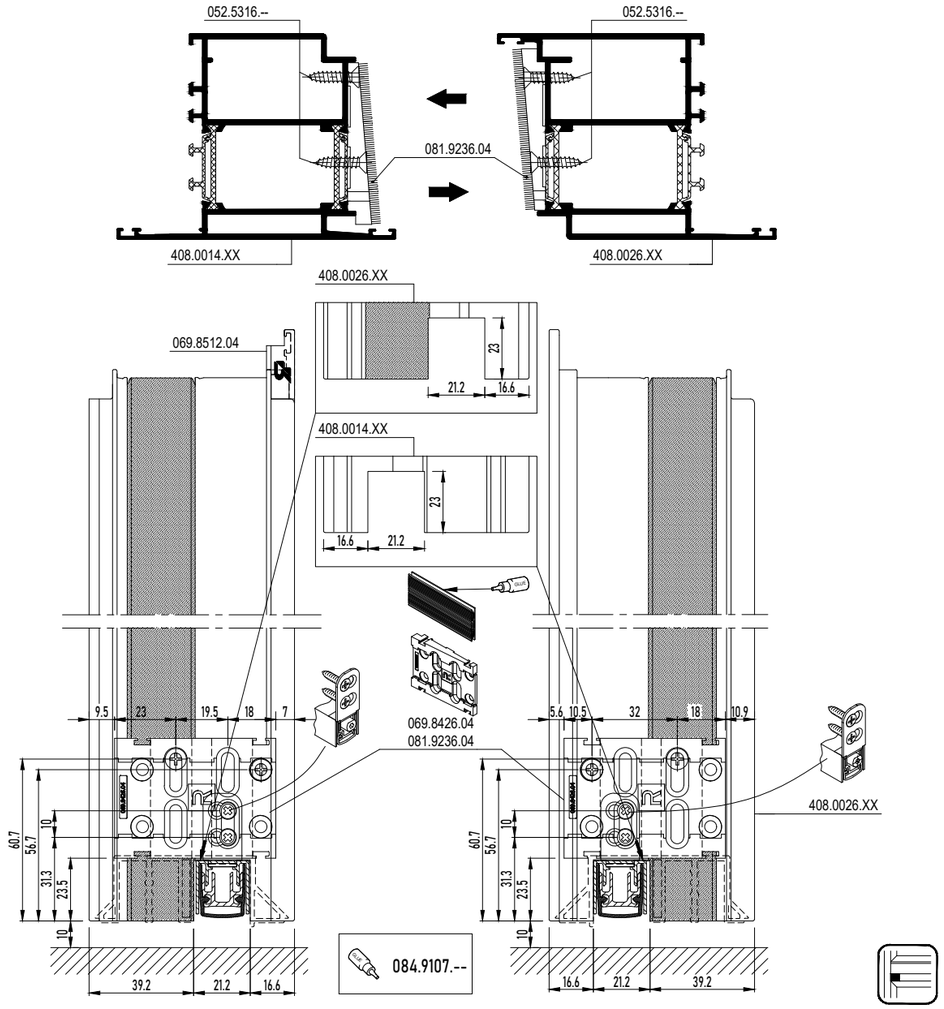

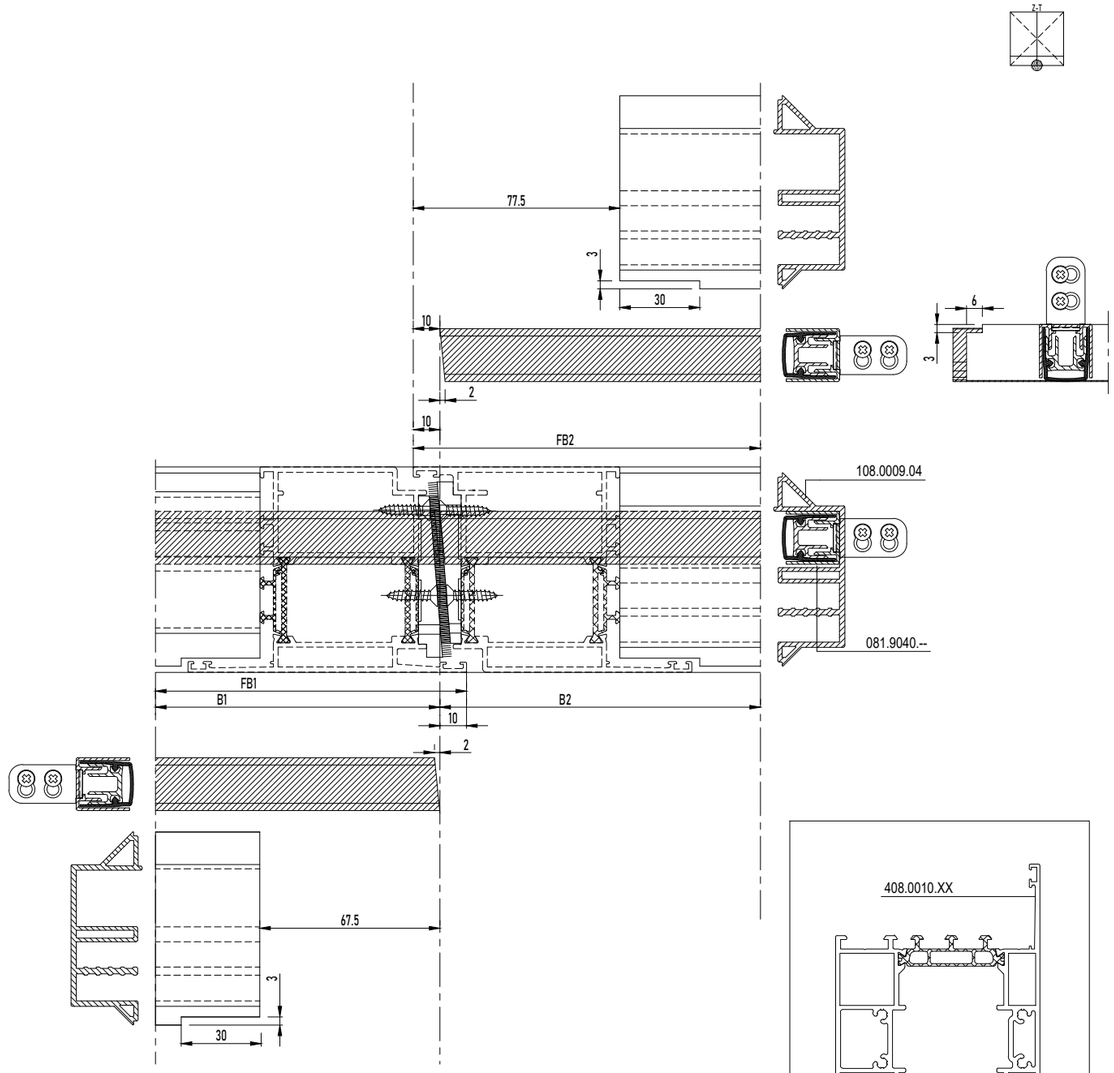

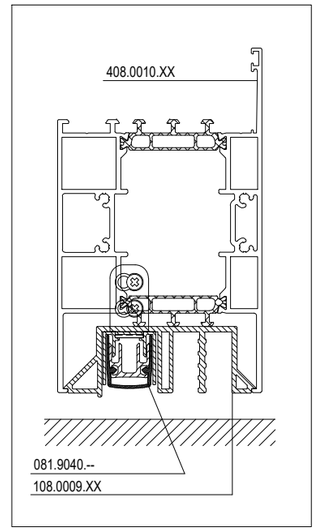

COMBINED DOOR AUTOMATIC SEALING INWARD OPENING

COMBINED DOOR INWARD OPENING WITH AUTOMATIC DRAUGHT EXCLUDER

MASTERLINE 8-Fu

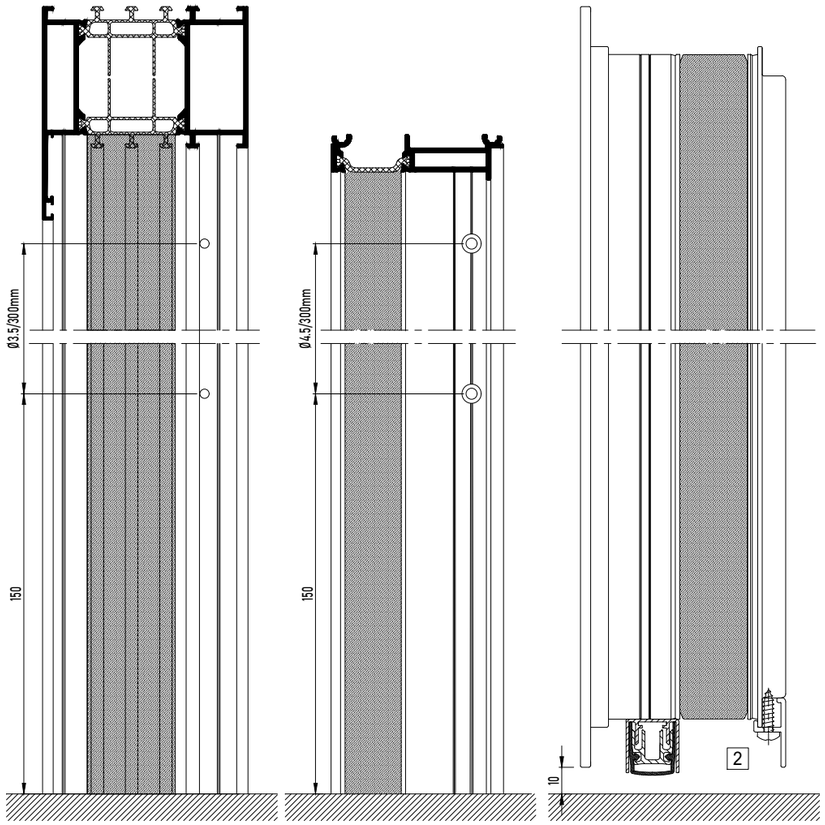

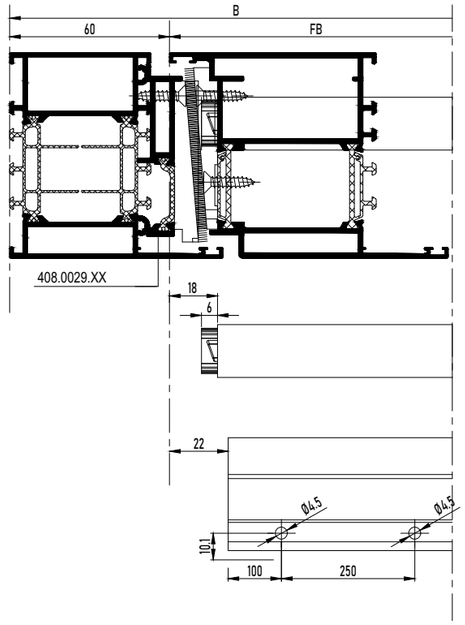

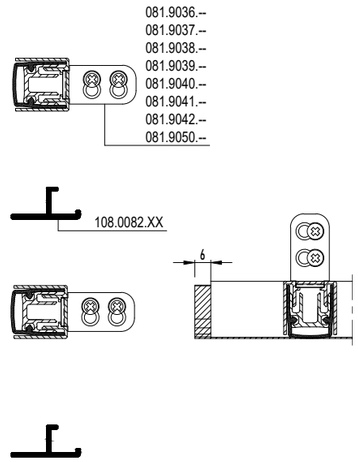

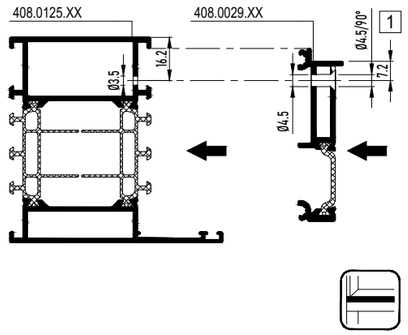

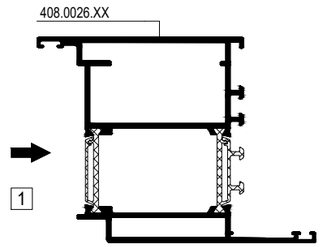

COMBINED DOOR AUTOMATIC SEALING INWARD OPENING

COMBINED DOOR INWARD OPENING WITH AUTOMATIC DRAUGHT EXCLUDER

MASTERLINE 8-Fu

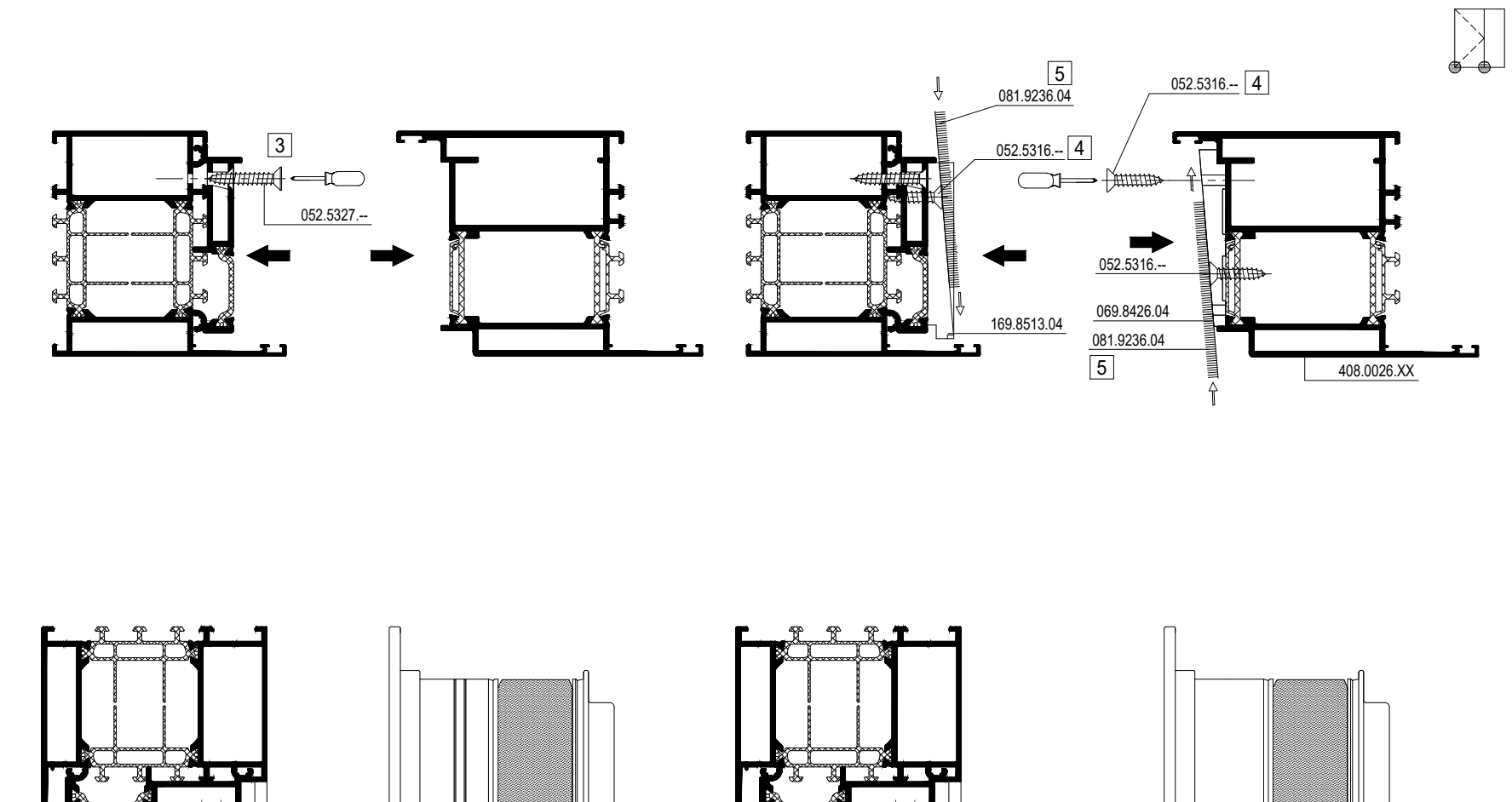

COMBINED DOOR AUTOMATIC SEALING INWARD OPENING

COMBINED DOOR INWARD OPENING WITH AUTOMATIC DRAUGHT EXCLUDER - BOTTOM DOOR RAIL

MASTERLINE 8-Fu

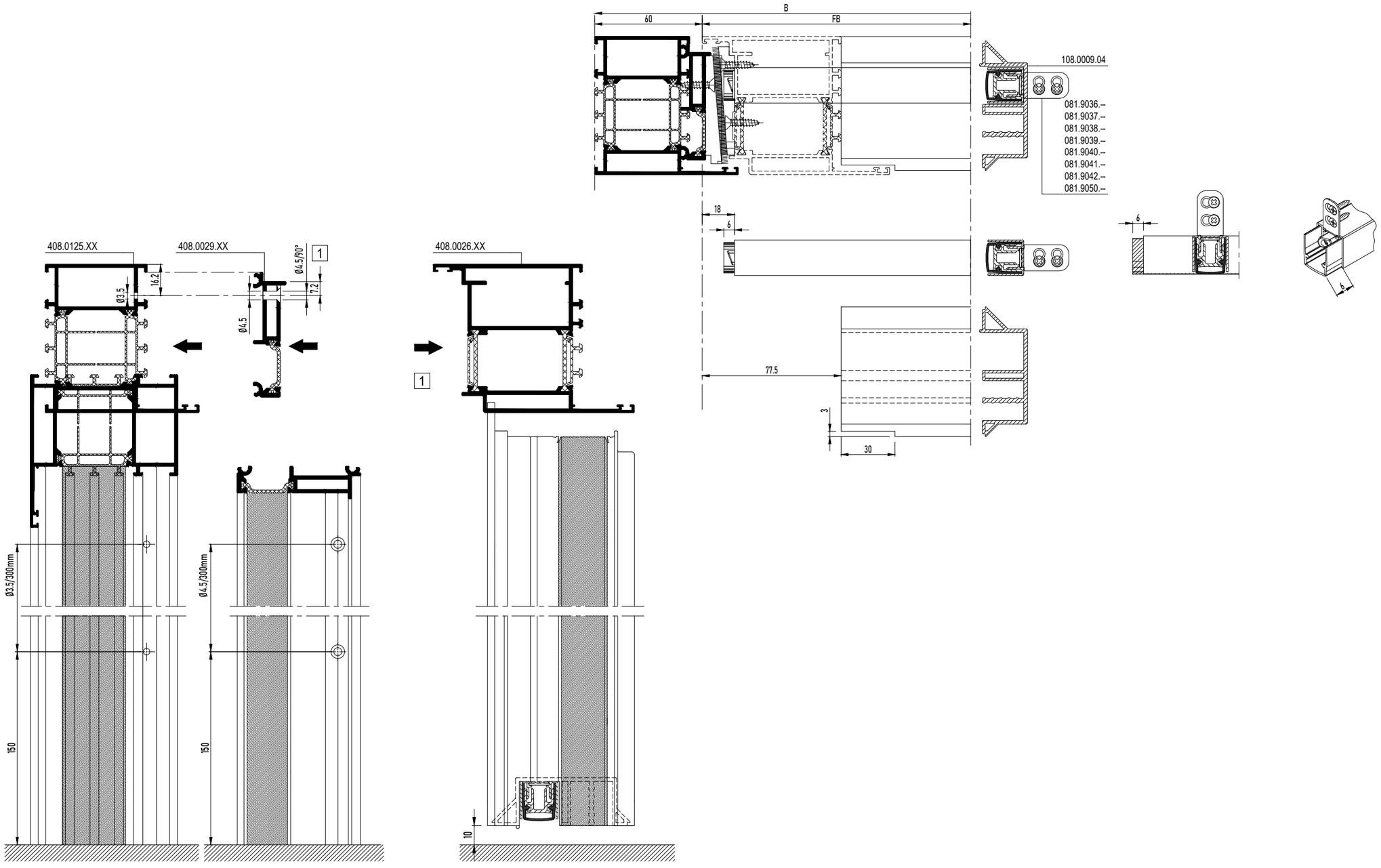

COMBINED DOOR AUTOMATIC SEALING INWARD OPENING

COMBINED DOOR INWARD OPENING WITH AUTOMATIC DRAUGHT EXCLUDER - BOTTOM DOOR RAIL

MASTERLINE 8-Fu

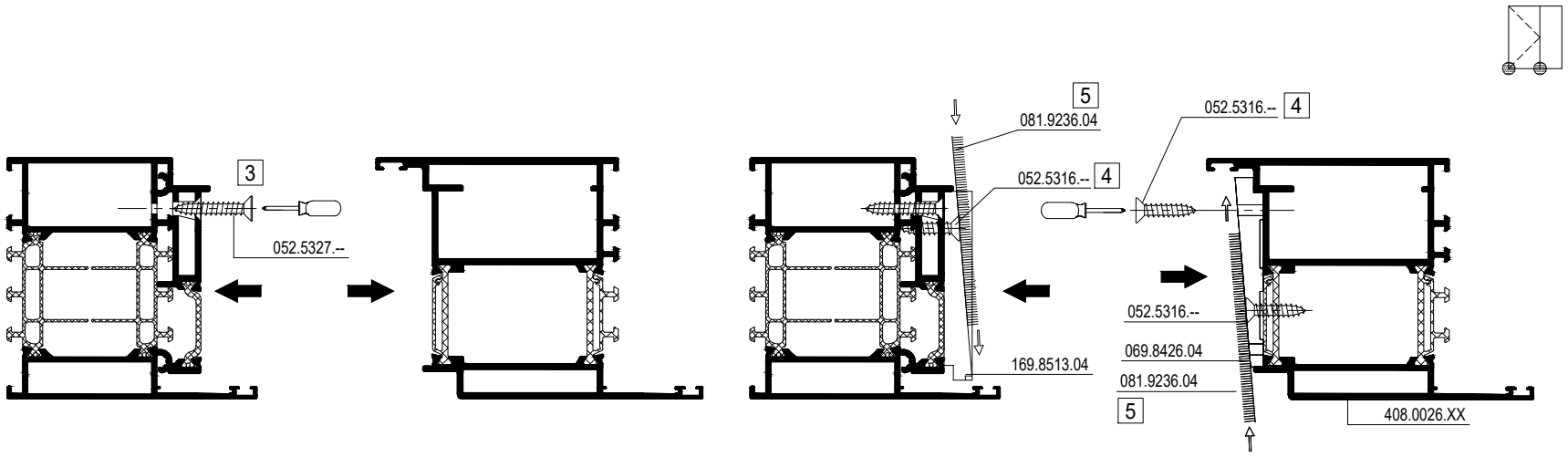

MONTAGEVOLGORDE
L 'ORDRE DE MONTAGE
THE ORDER OF ASSEMBLY
MONTAGEREIHENFOLGE

1 2 3 .

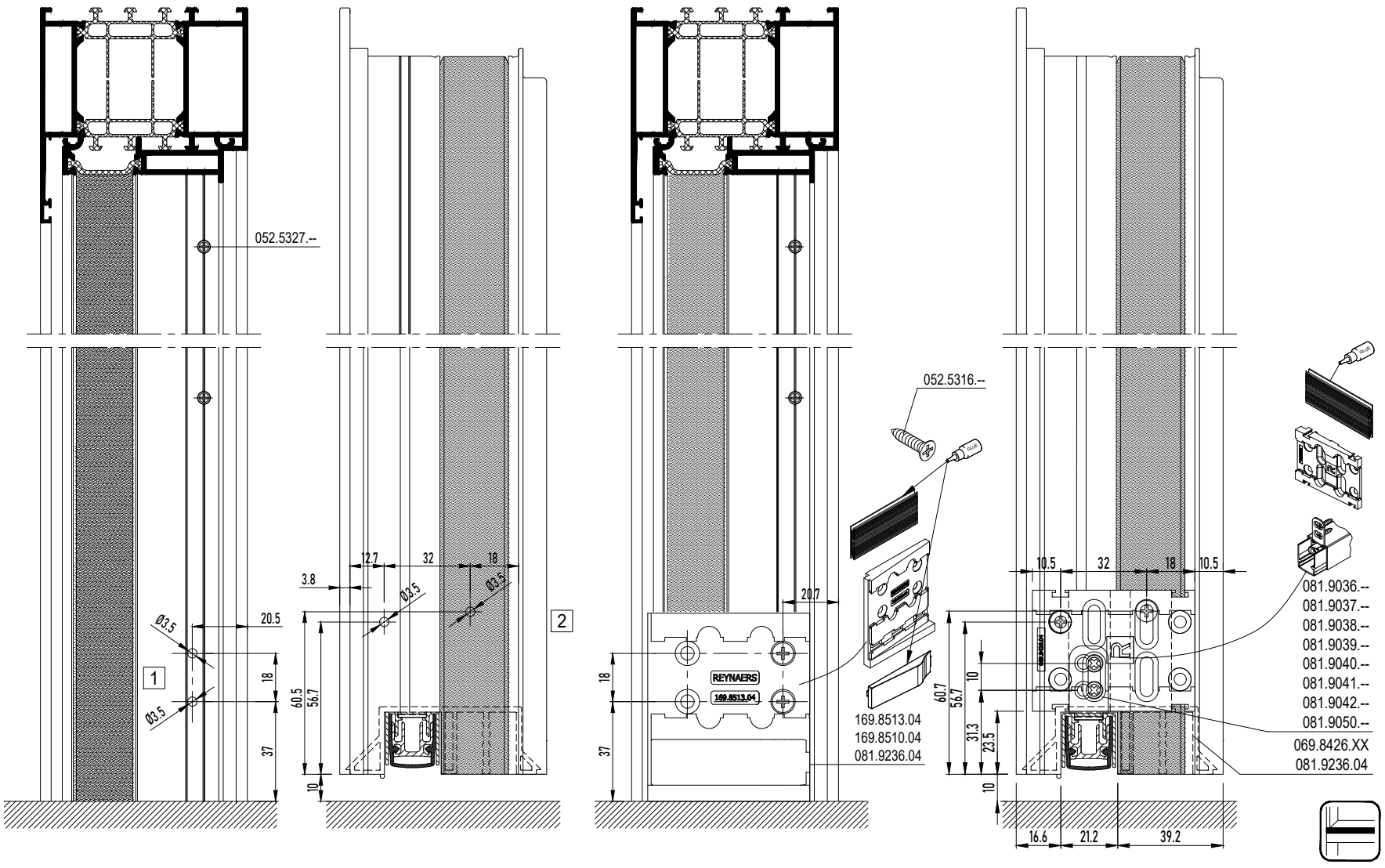

DOOR AUTOMATIC BRUSH INWARD OPENING

DOOR INWARD OPENING WITH BRUSH - BOTTOM DOOR RAIL

MASTERLINE 8-Fu

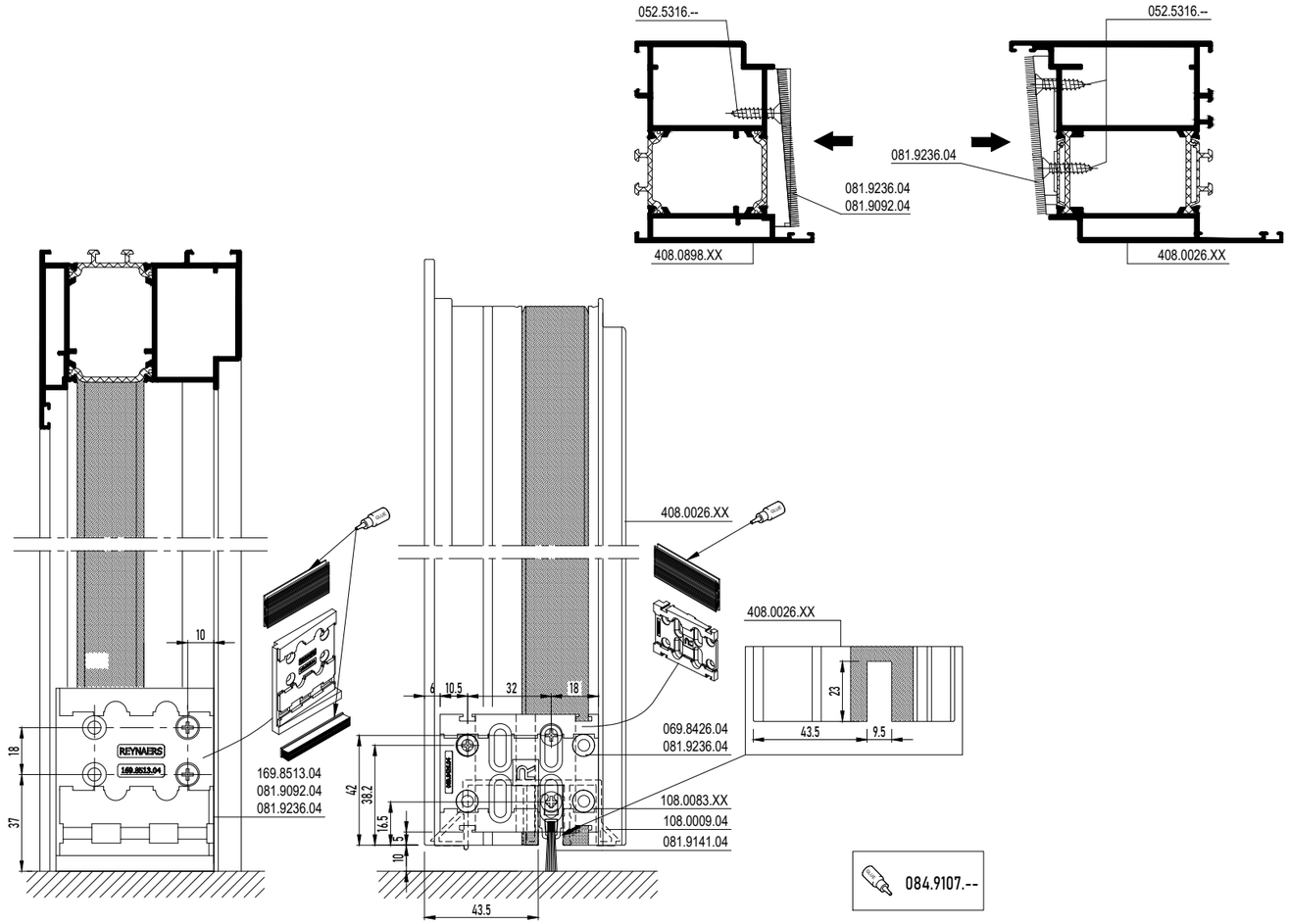

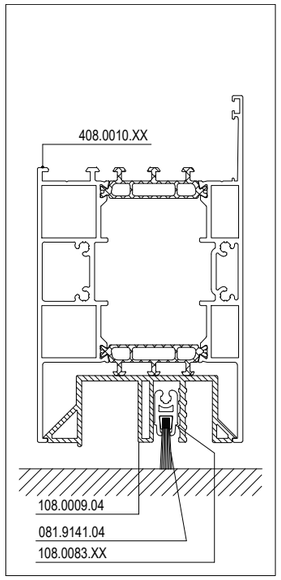

DOOR AUTOMATIC BRUSH INWARD OPENING

DOOR INWARD OPENING WITH BRUSH - BOTTOM DOOR RAIL

MASTERLINE 8-Fu

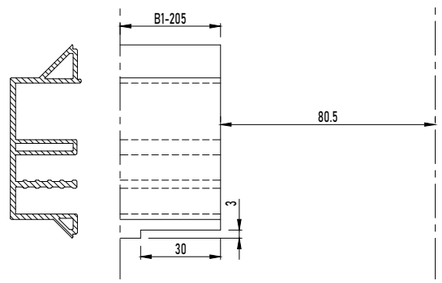

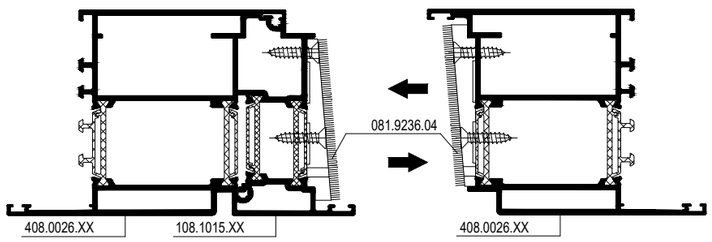

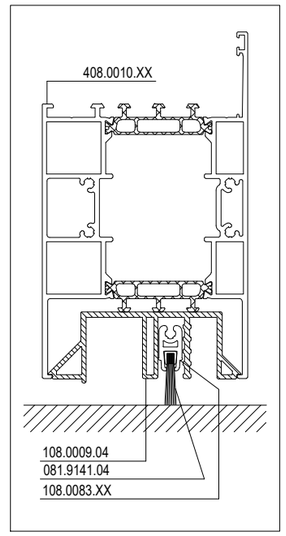

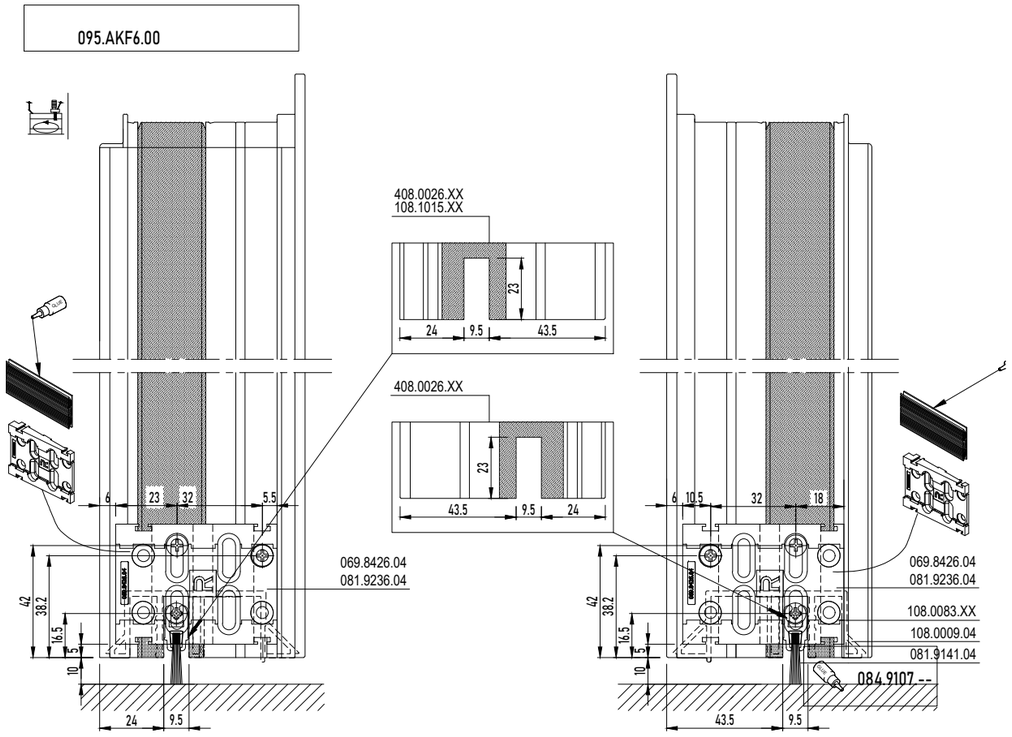

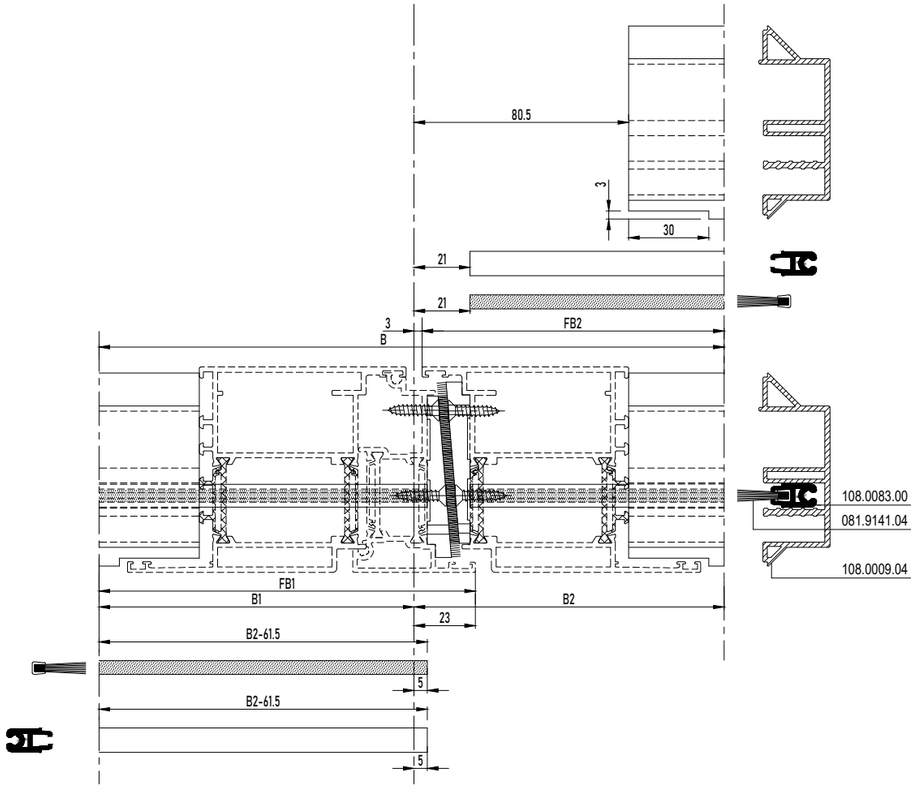

DOOR AUTOMATIC BRUSH INWARD OPENING

DOOR INWARD OPENING WITH BRUSH - BOTTOM DOOR RAIL

MASTERLINE 8-Fu

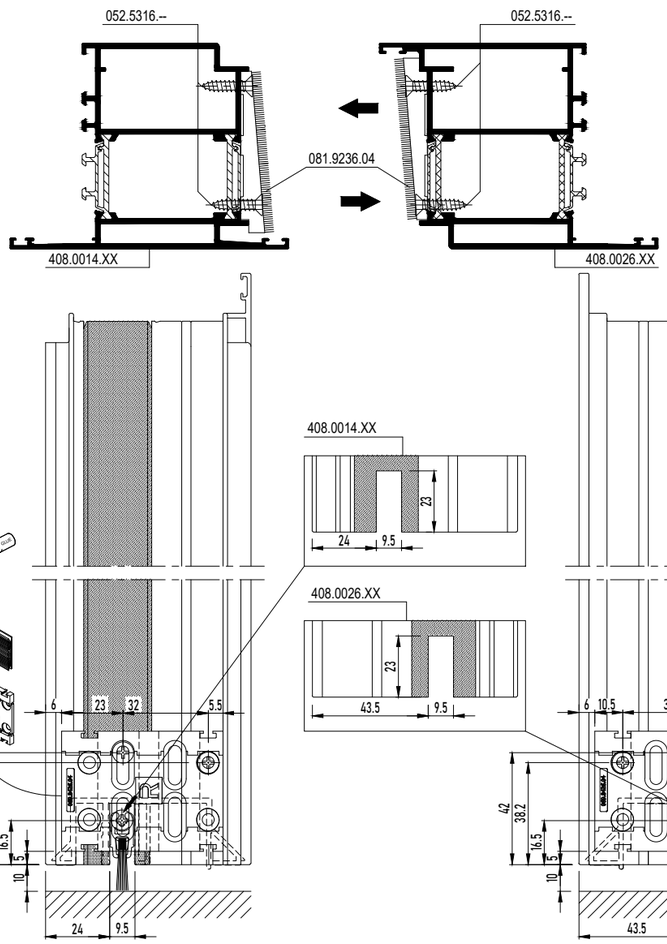

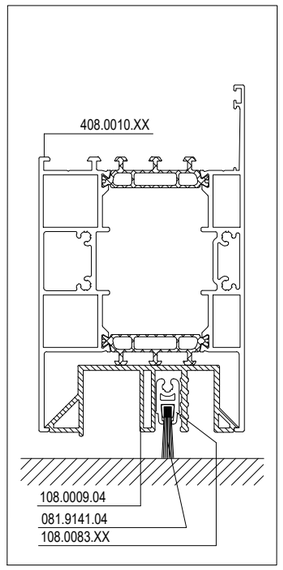

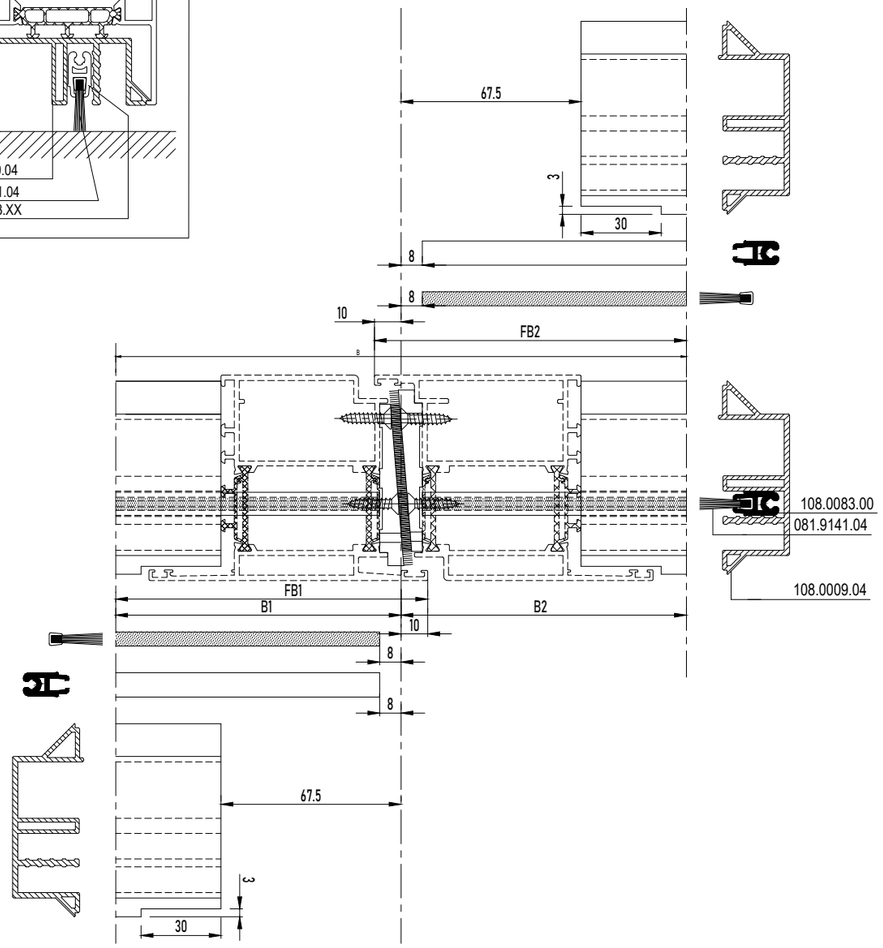

COMBINED DOOR BRUSH INWARD OPENING

COMBINED DOOR INWARD OPENING 'BRUSH'

MASTERLINE 8-Fu

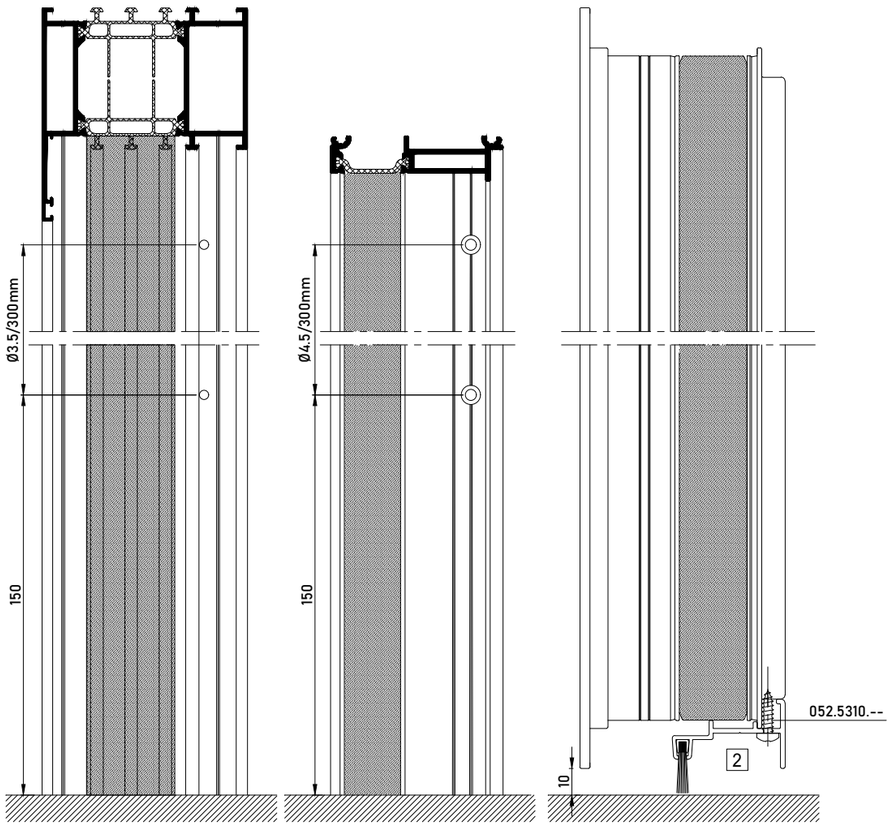

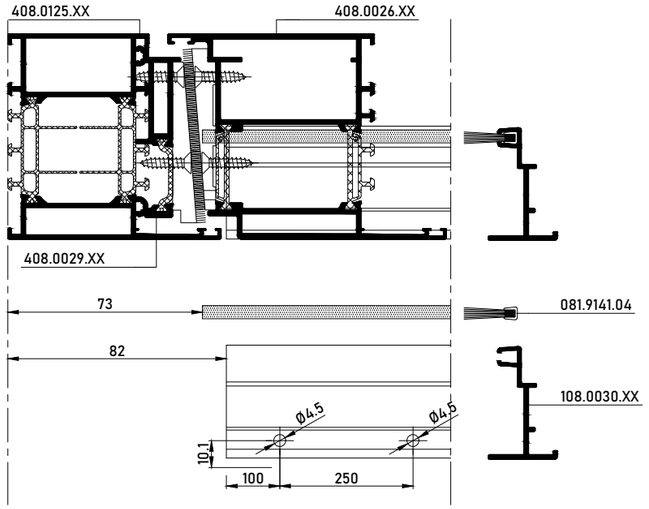

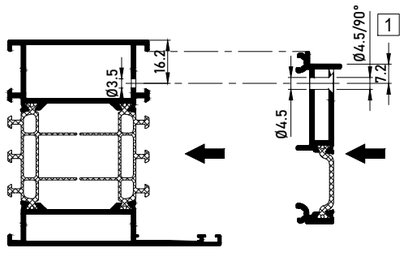

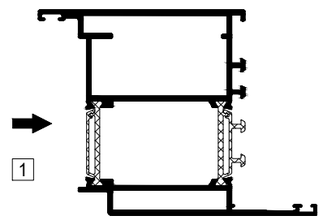

MONTAGEVOLGORDE
L'ORDRE DE MONTAGE
THE ORDER OF ASSEMBLY
MONTAGEREIHENFOLGE
1 2 3 .

COMBINED DOOR BRUSH INWARD OPENING

COMBINED DOOR INWARD OPENING 'BRUSH'

MASTERLINE 8-Fu

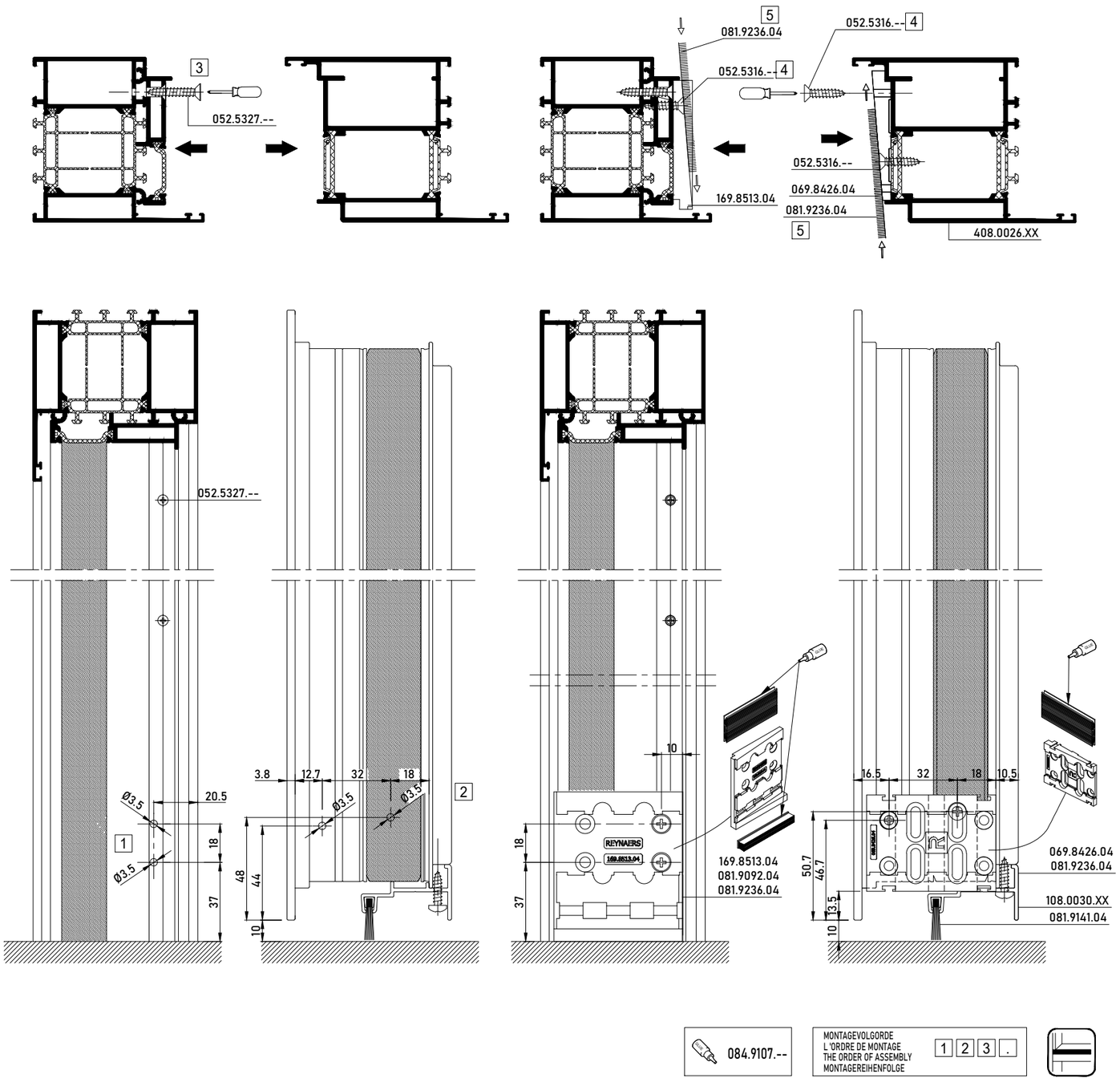

COMBINED DOOR AUTOMATIC BRUSH INWARD OPENING

COMBINED DOOR INWARD OPENING WITH BRUSH - BOTTOM DOOR RAIL

MASTERLINE 8-Fu

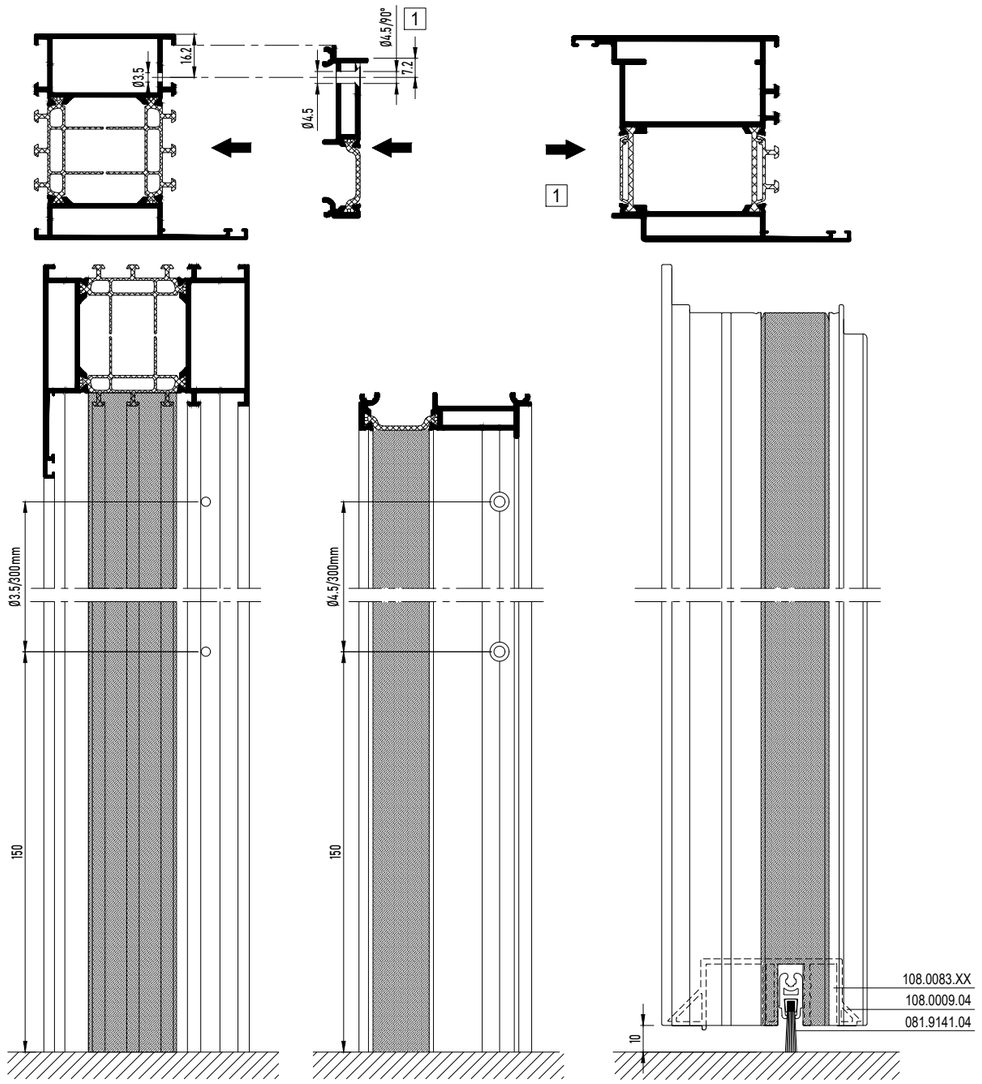

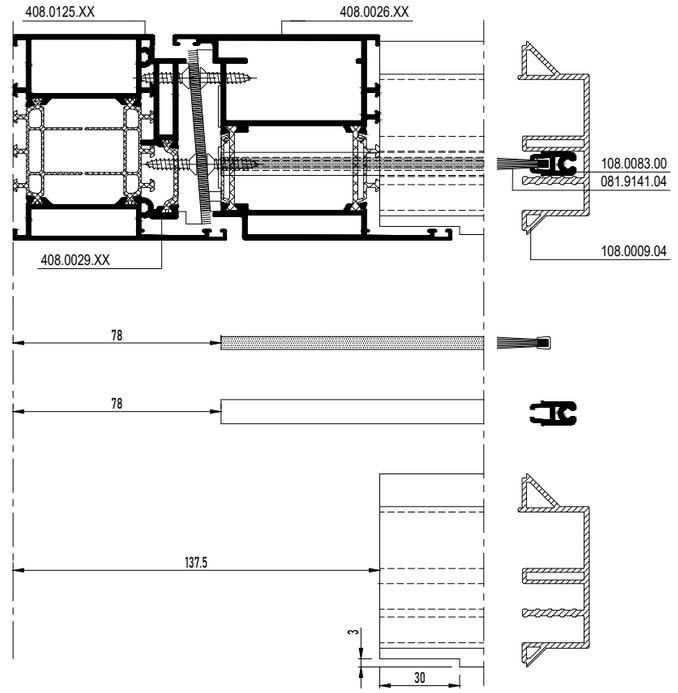

MONTAGEVOLGORDE
L'ORDRE DE MONTAGE
THE ORDER OF ASSEMBLY
MONTAGEREIHENFOLGE
1 2 3 .

COMBINED DOOR AUTOMATIC BRUSH INWARD OPENING

COMBINED DOOR INWARD OPENING WITH BRUSH - BOTTOM DOOR RAIL

MASTERLINE 8-Fu

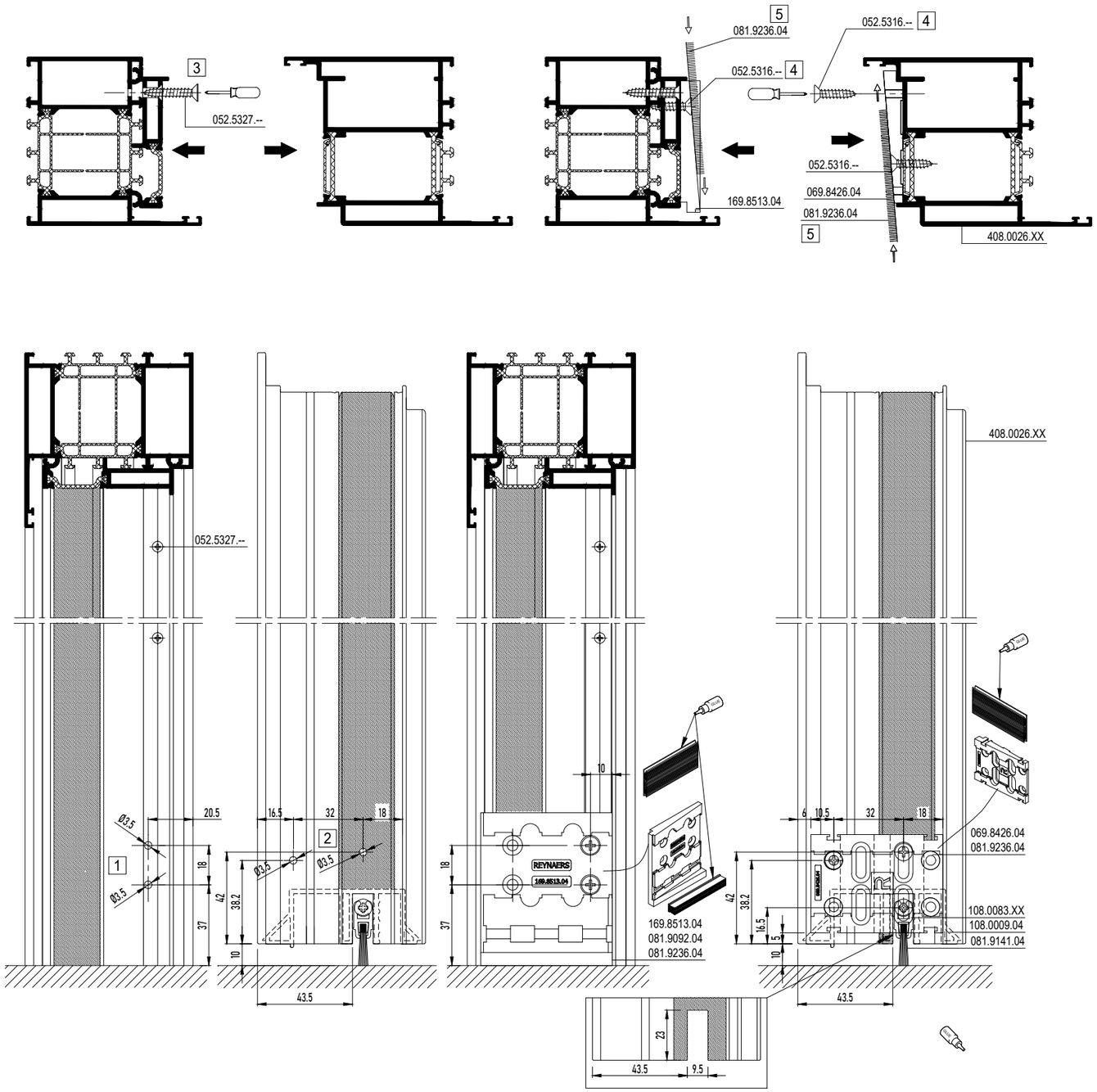

DOOR WEATHER STRIP OUTWARD OPENING

DOOR OUTWARD OPENING WITH DOUBLE WEATHER STRIP

MASTERLINE 8-Fu

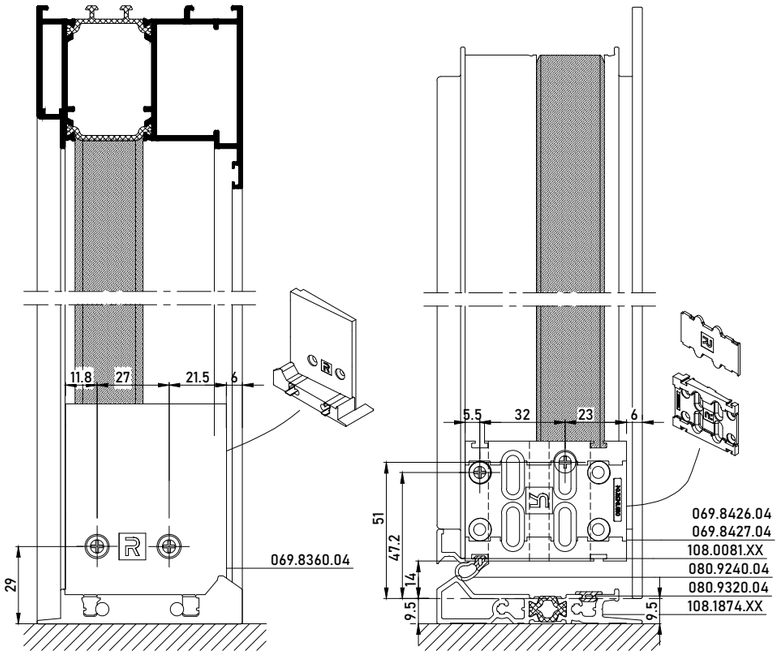

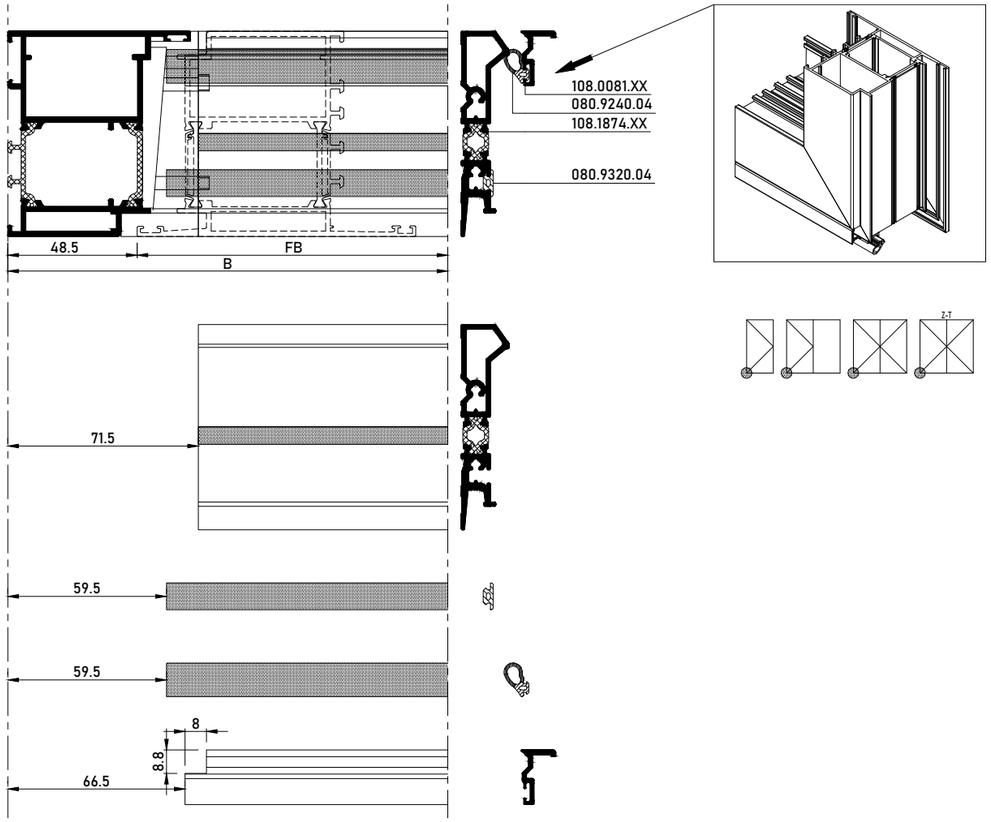

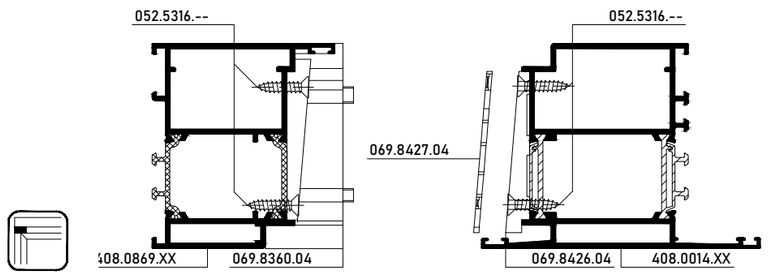

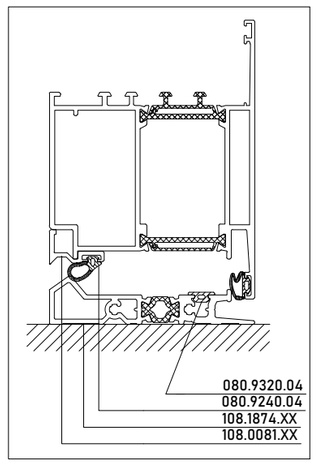

DOOR WEATHER STRIP OUTWARD OPENING

DOOR OUTWARD OPENING WITH DOUBLE WEATHER STRIP

MASTERLINE 8-Fu

OPTIE A / OPTION A

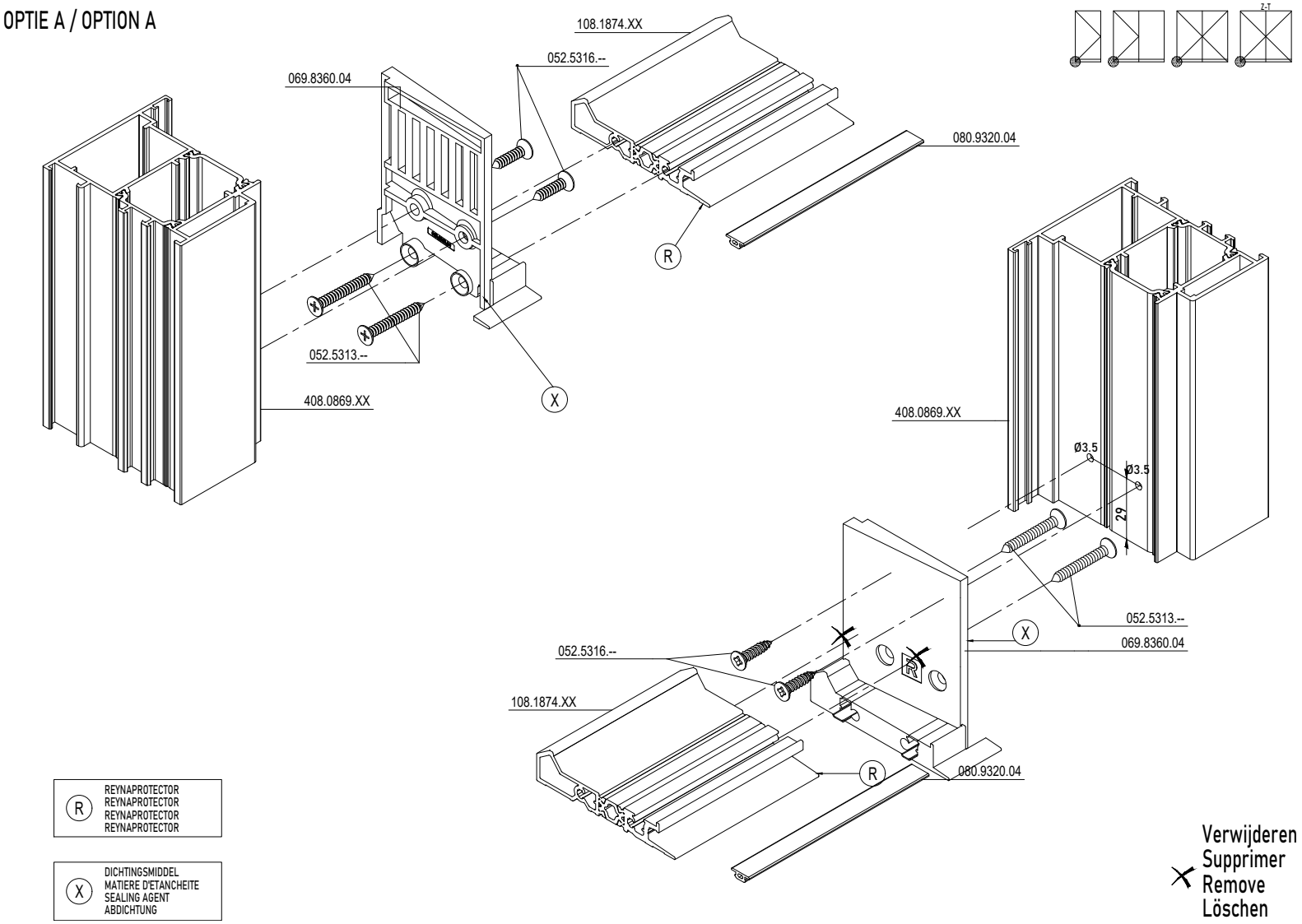

DOOR WEATHER STRIP OUTWARD OPENING

DOOR OUTWARD OPENING WITH DOUBLE WEATHER STRIP

MASTERLINE 8-Fu

OPTIE B / OPTION B

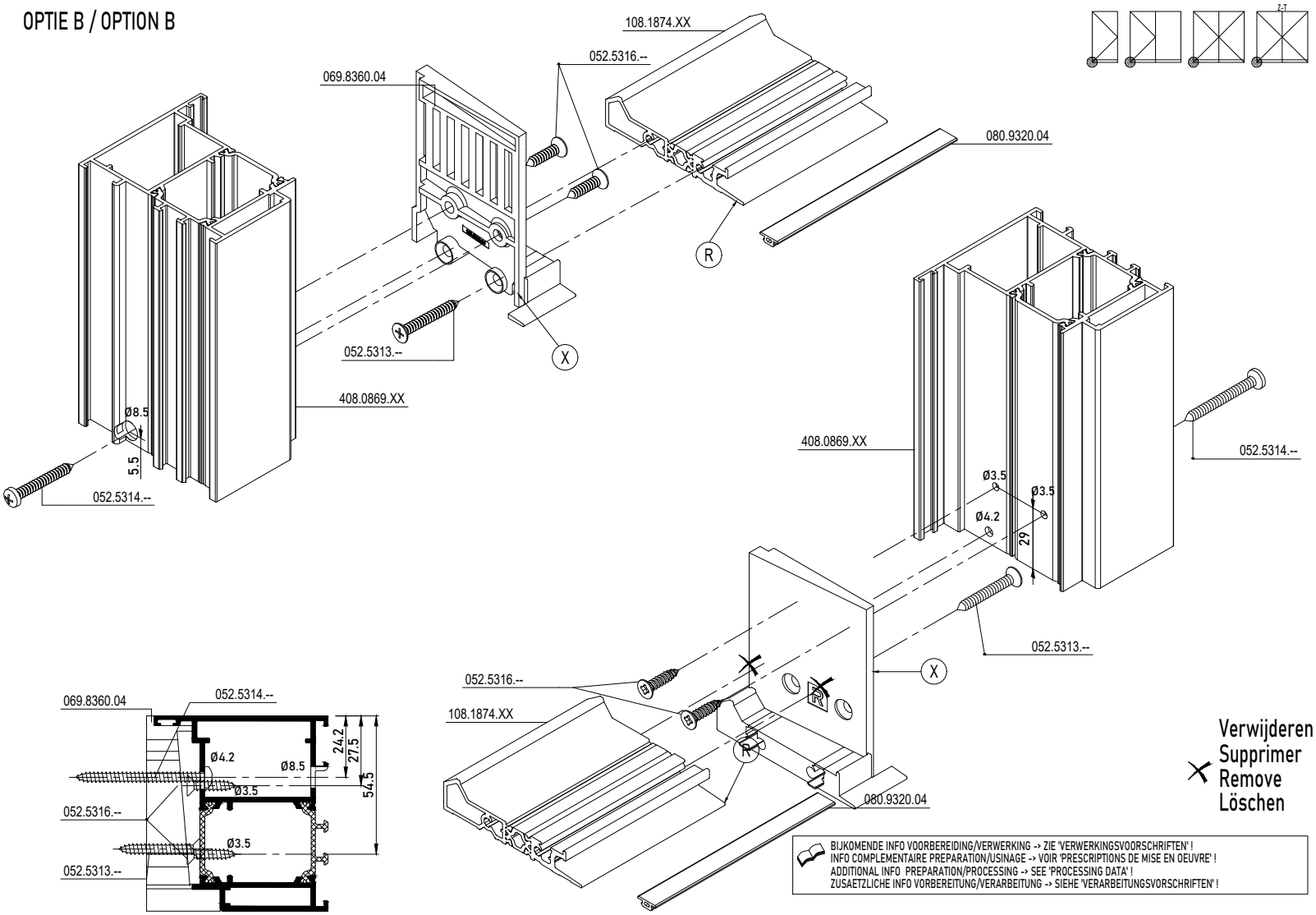

DOOR WEATHER STRIP OUTWARD OPENING

DOOR OUTWARD OPENING WITH DOUBLE WEATHER STRIP

MASTERLINE 8-Fu

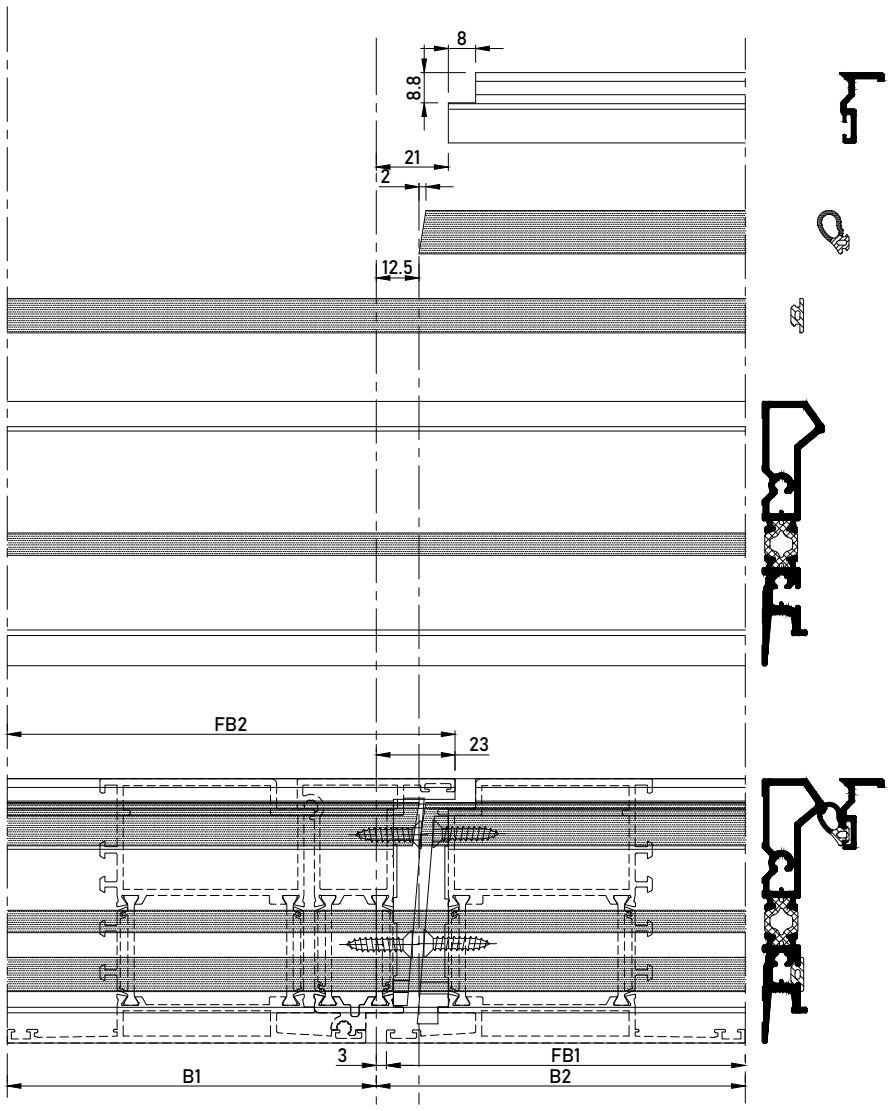

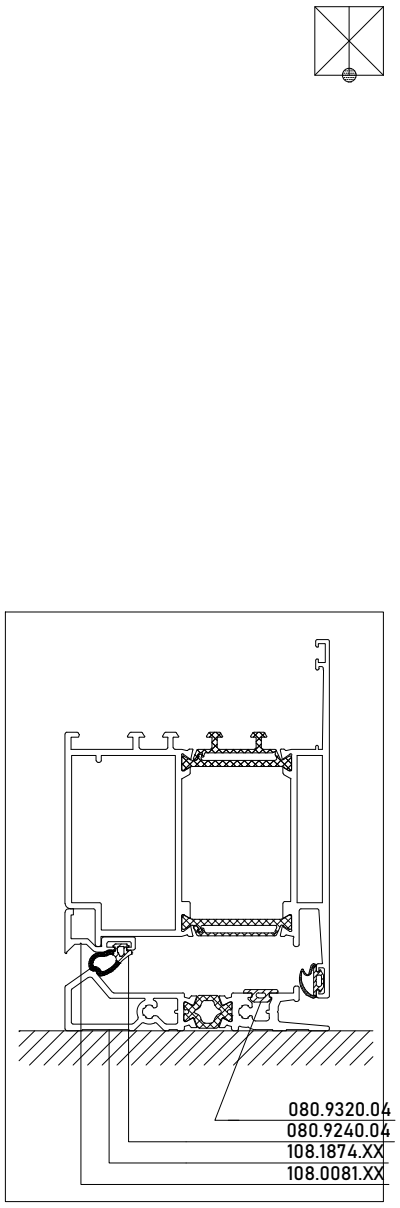

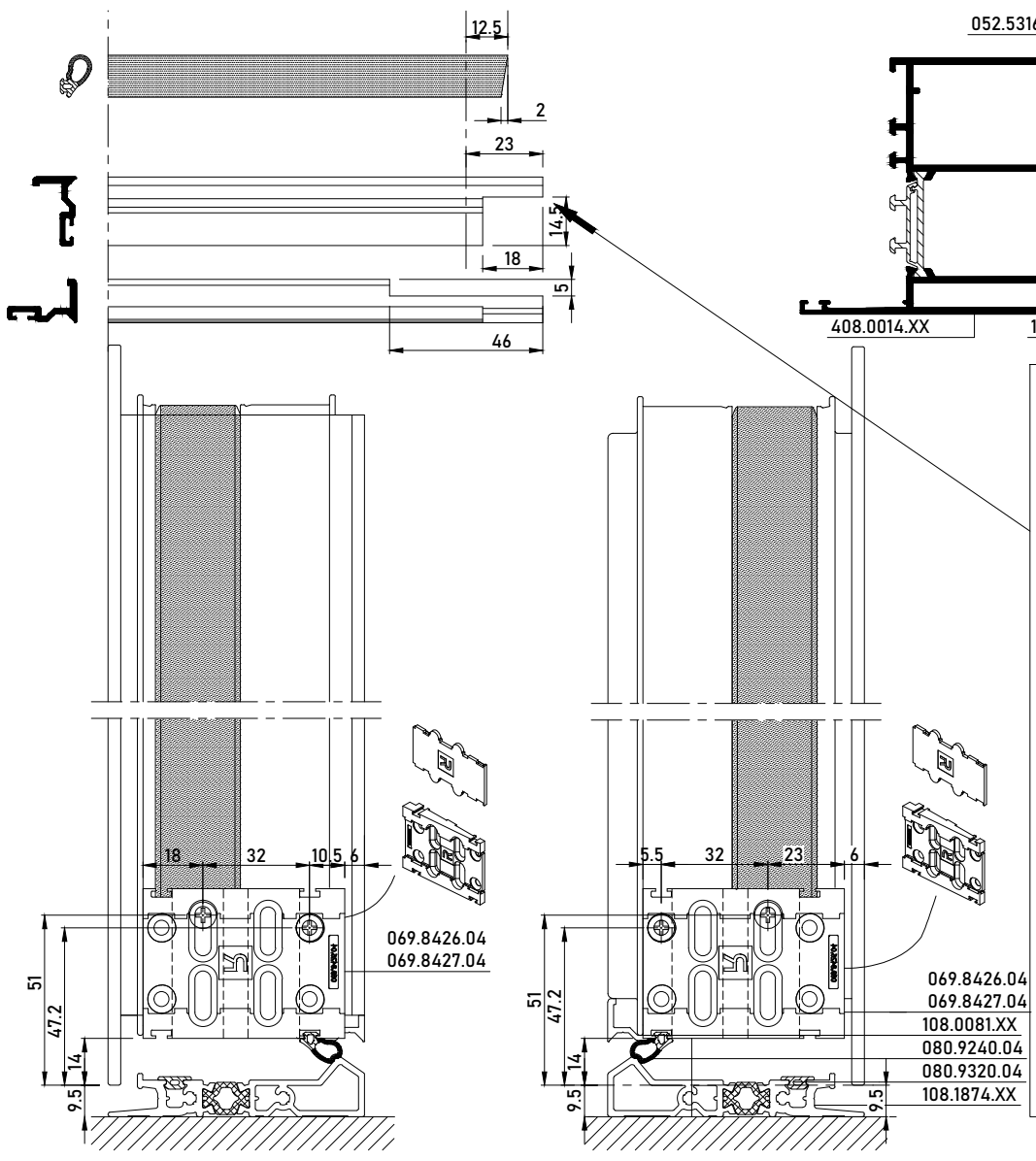

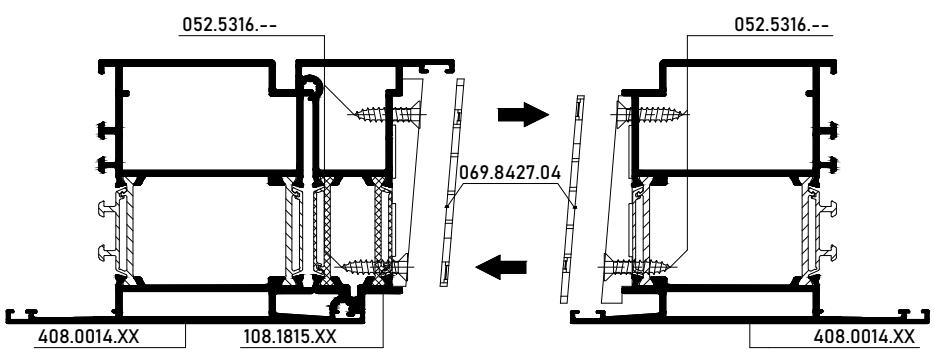

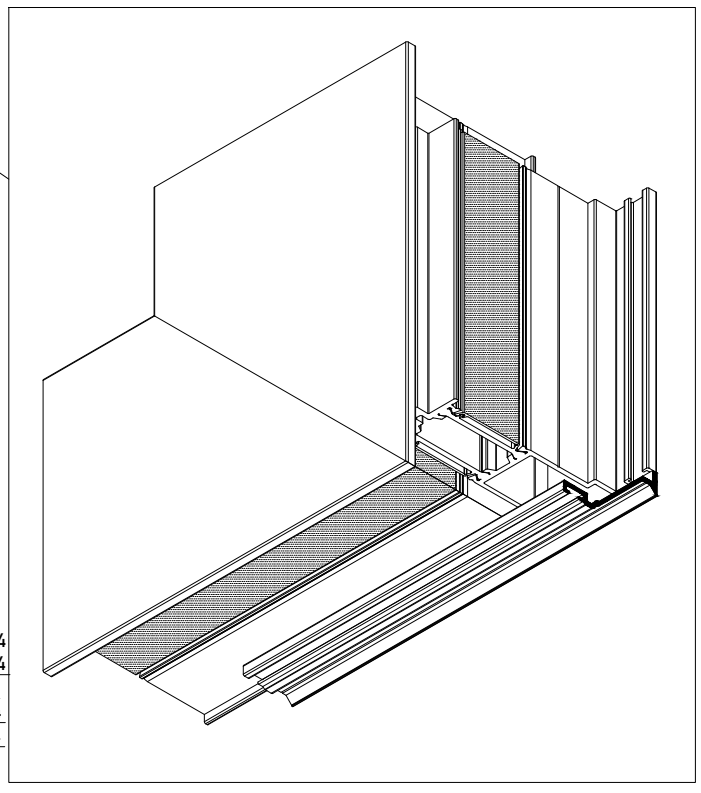

DOOR WEATHER STRIP OUTWARD OPENING

DOOR OUTWARD OPENING WITH DOUBLE WEATHER STRIP

MASTERLINE 8-Fu

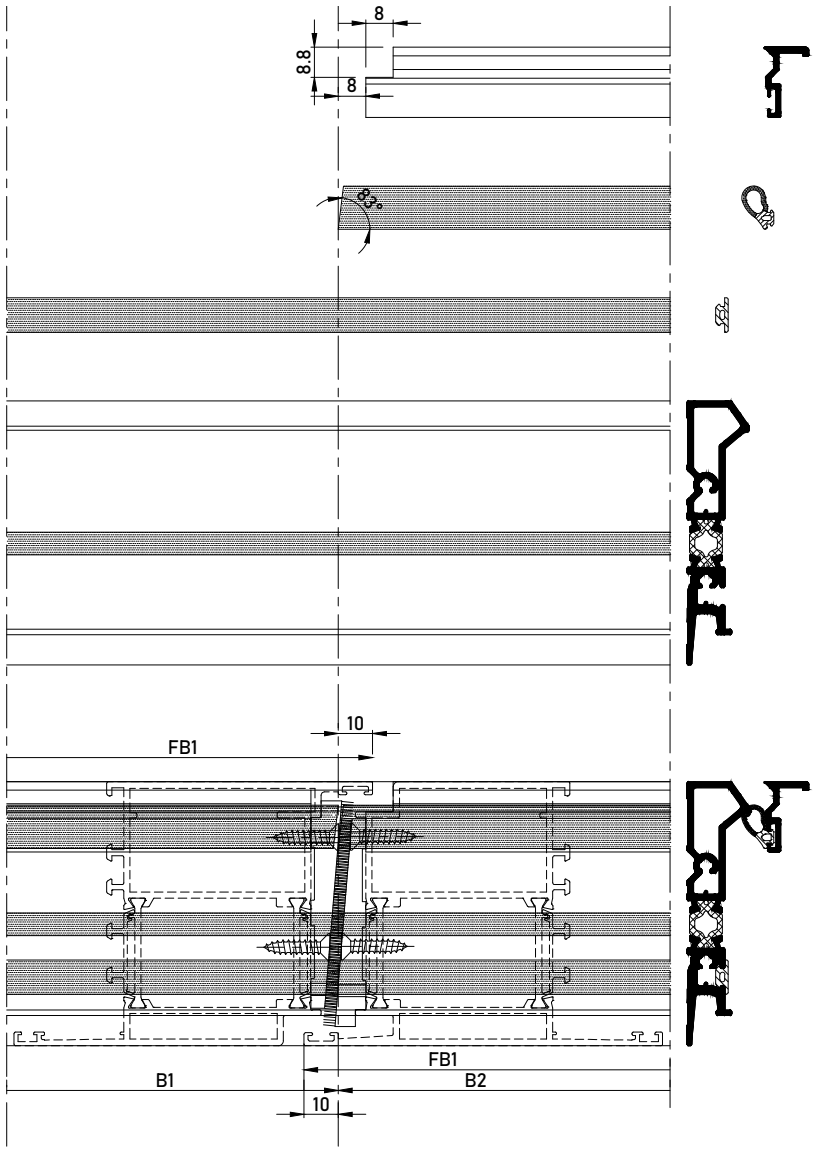



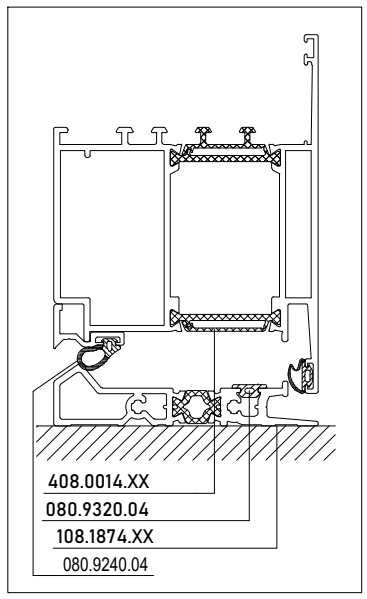

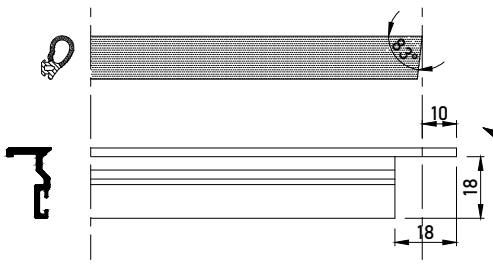

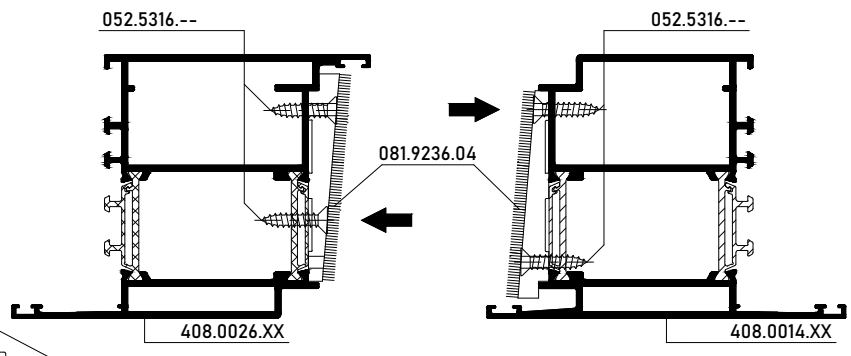

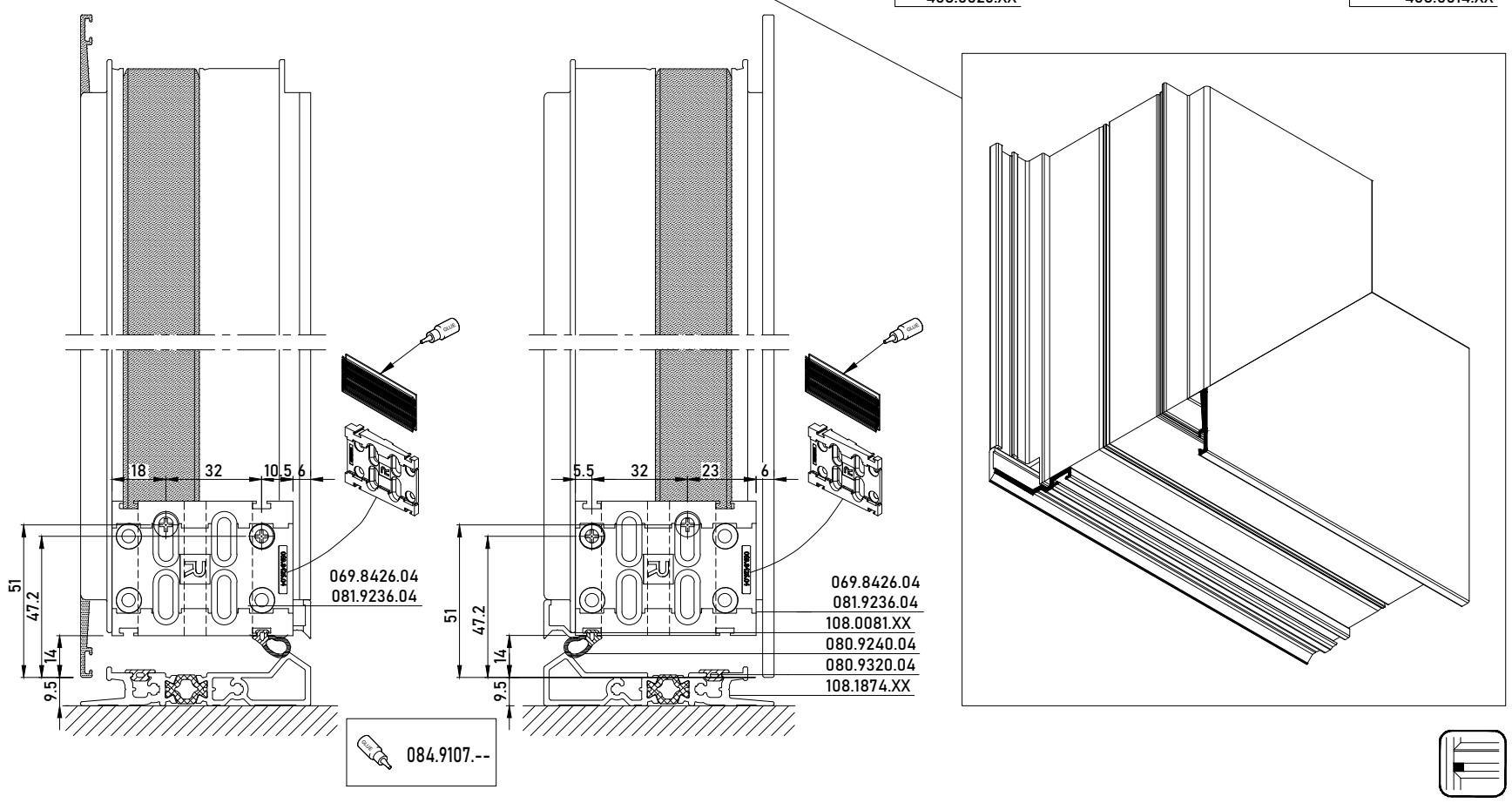

DOOR WEATHER STRIP OUTWARD OPENING

DOOR OUTWARD OPENING WITH DOUBLE WEATHER STRIP

MASTERLINE 8-Fu

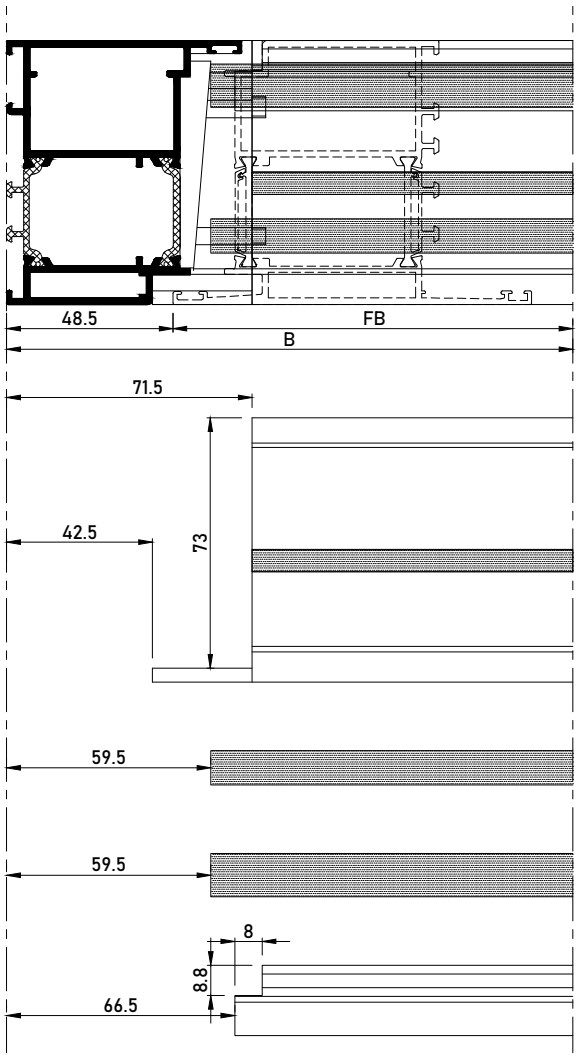

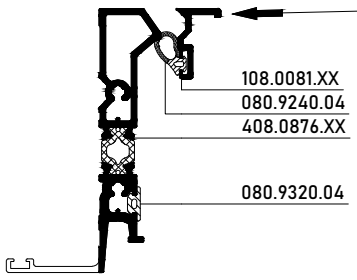

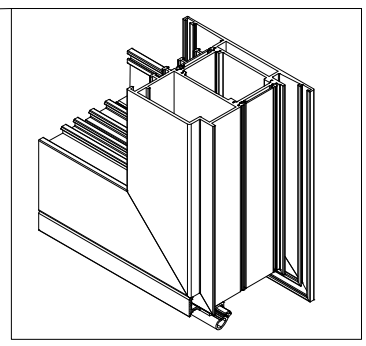

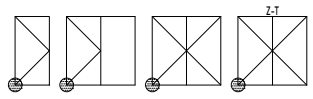

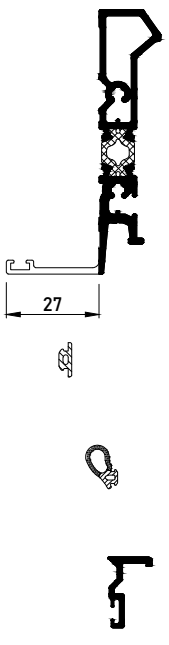

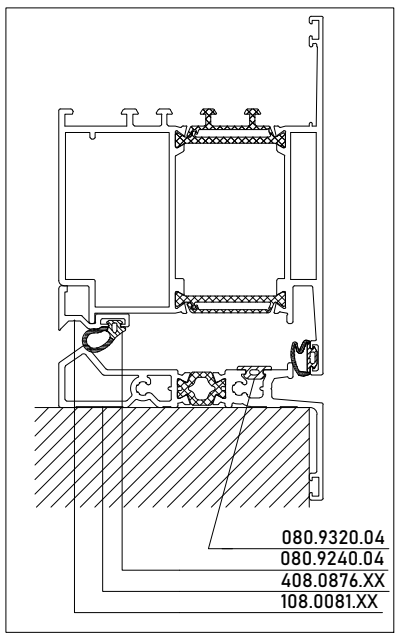

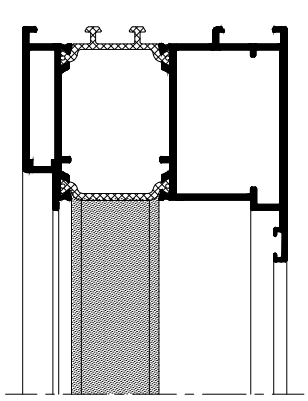

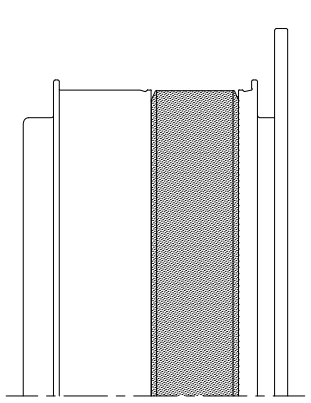

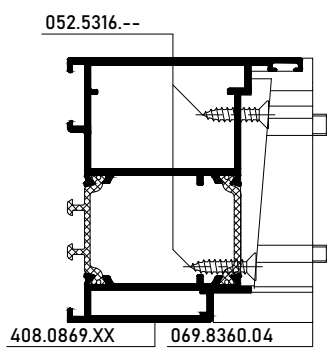

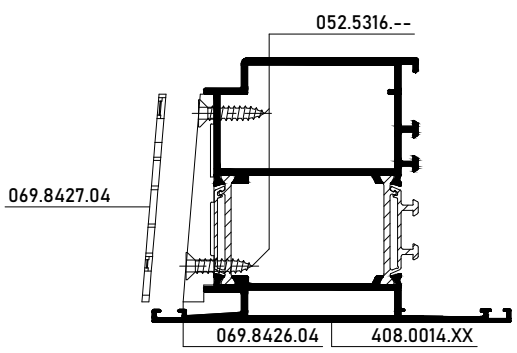

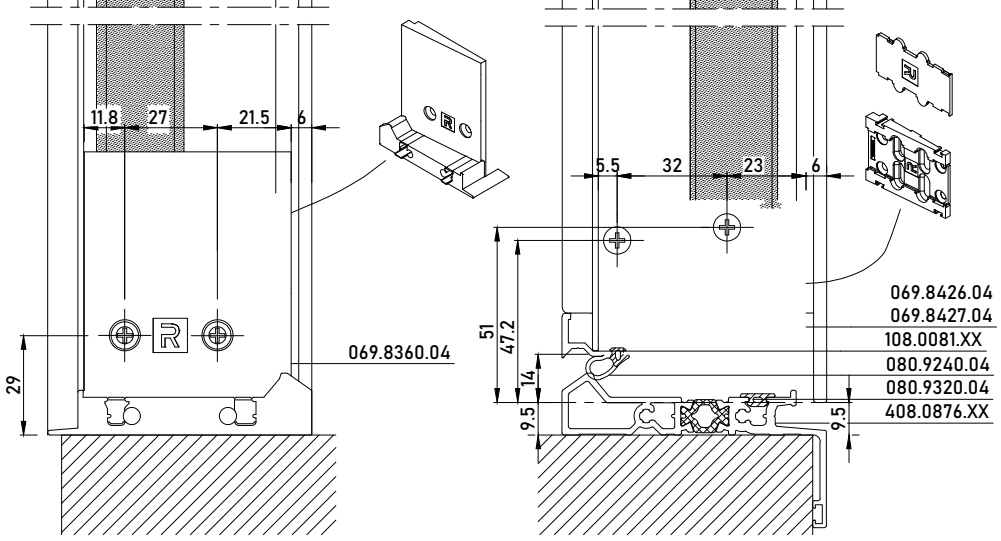

DOOR WEATHER STRIP OUTWARD OPENING

DOOR OUTWARD OPENING WITH DOUBLE WEATHER STRIP

MASTERLINE 8-Fu

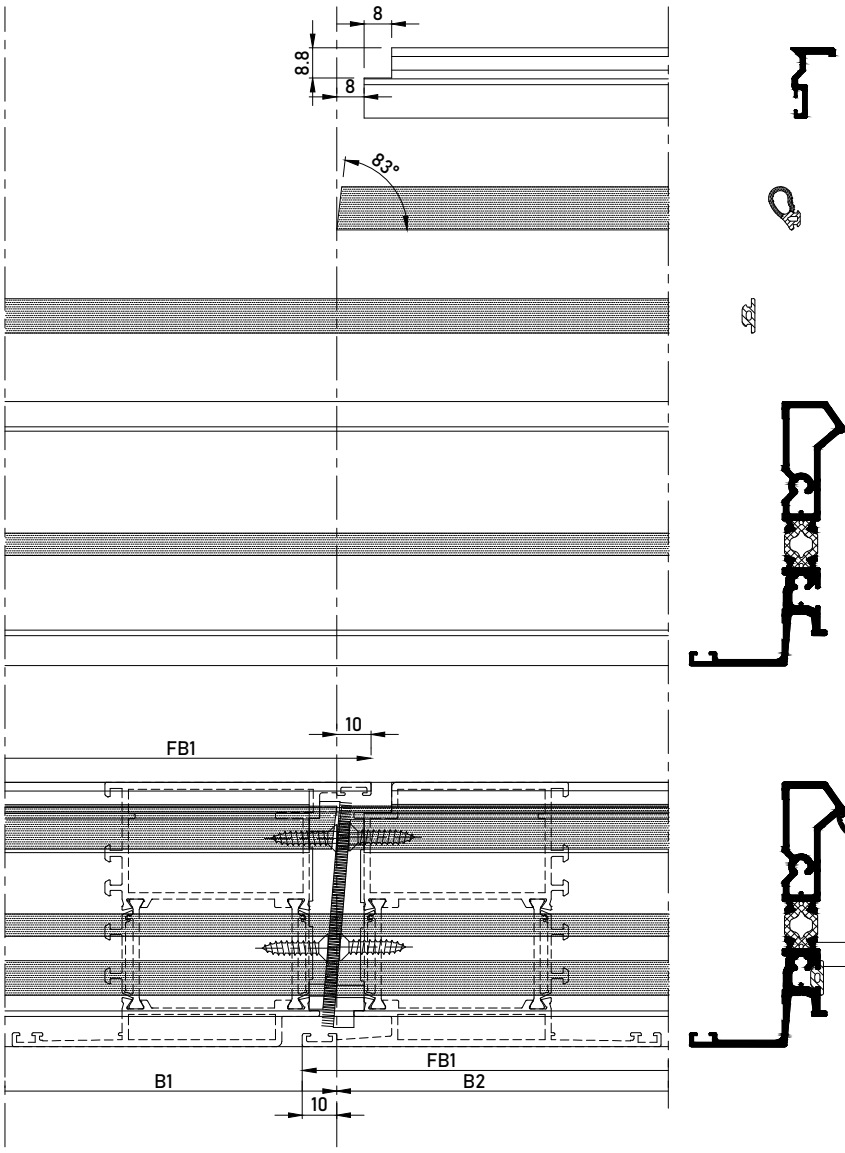

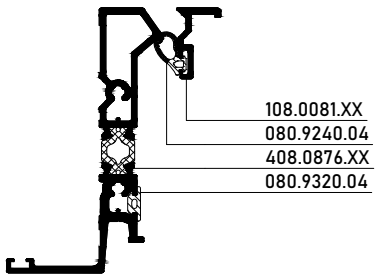



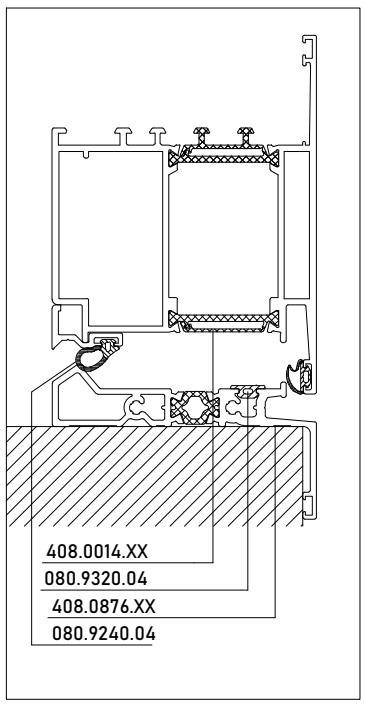

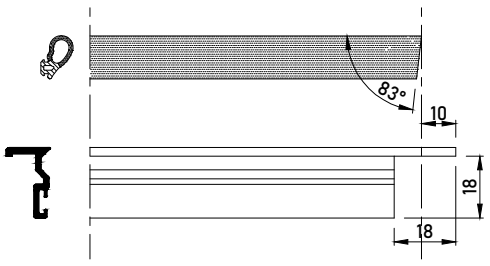

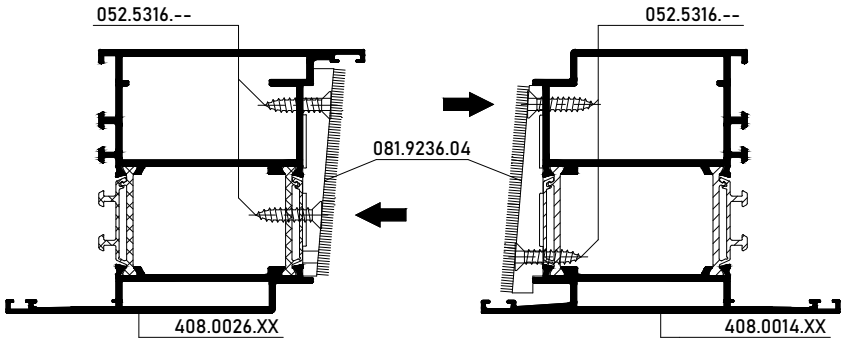

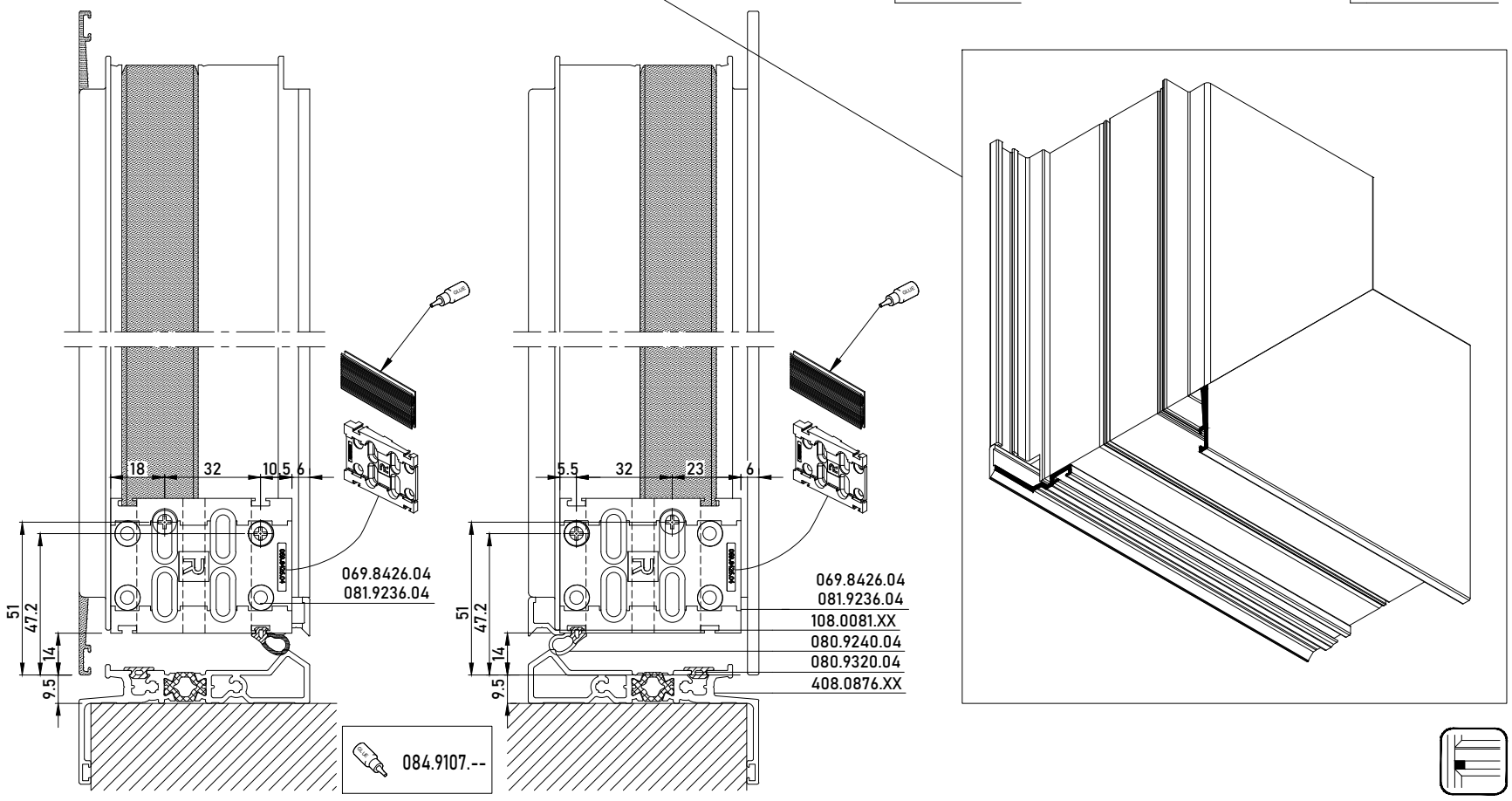

DOOR WEATHER STRIP OUTWARD OPENING

DOOR OUTWARD OPENING WITH DOUBLE WEATHER STRIP - BOTTOM DOOR RAIL

MASTERLINE 8-Fu

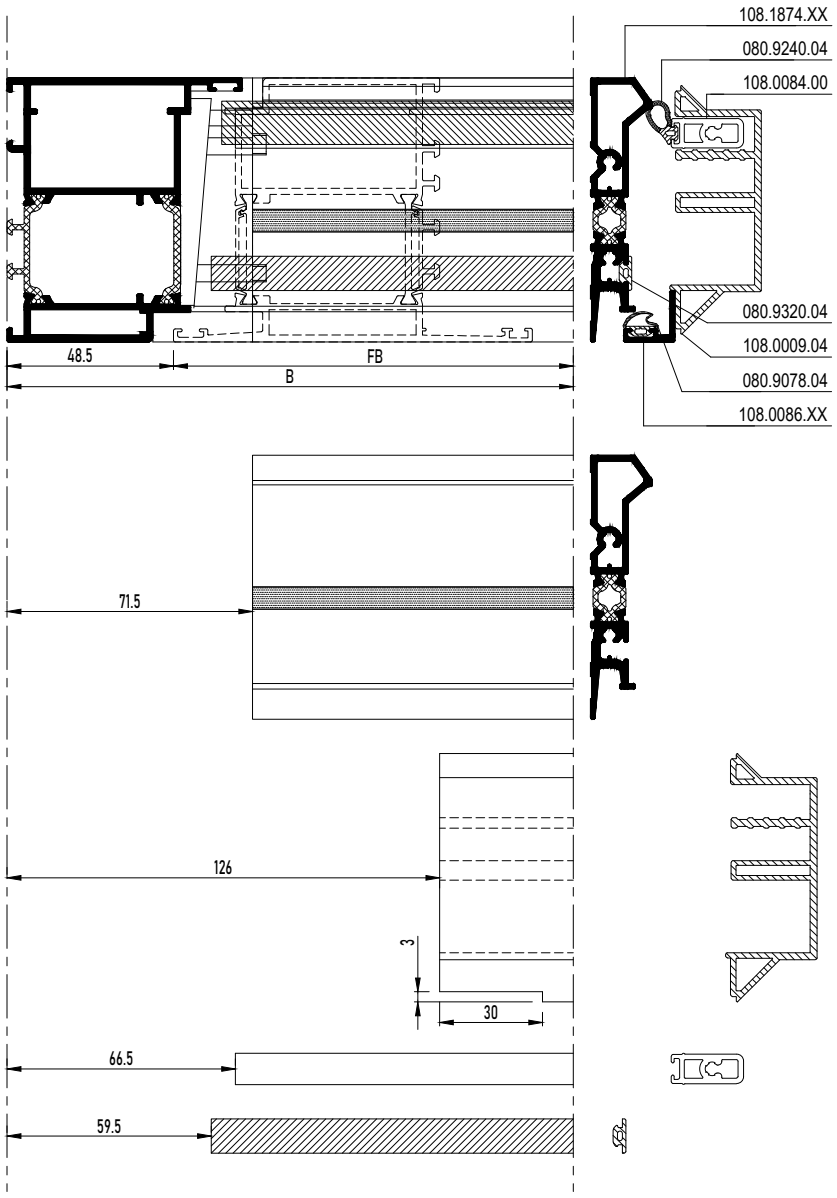

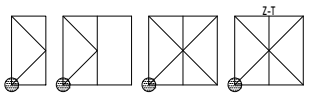

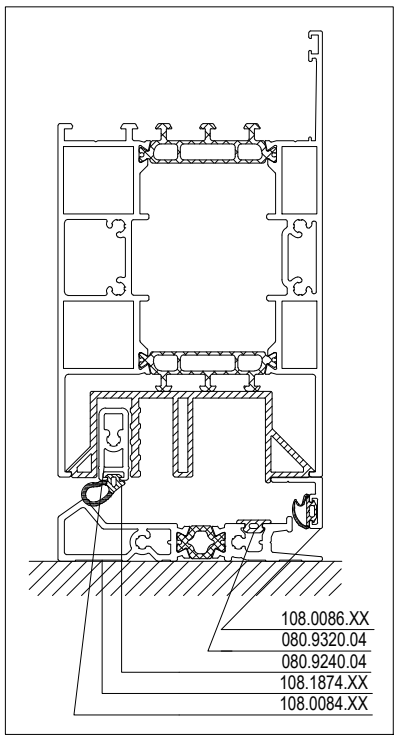

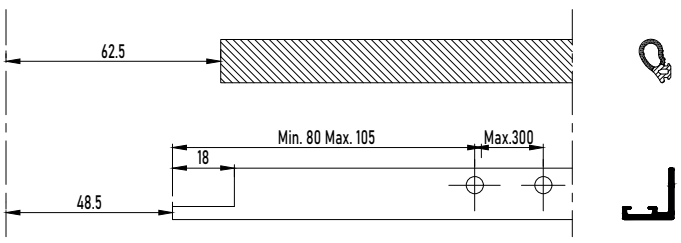

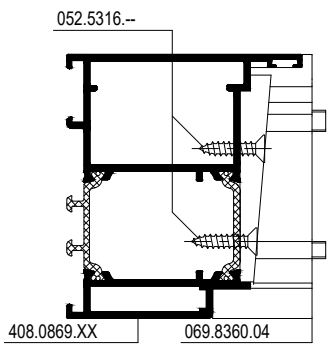

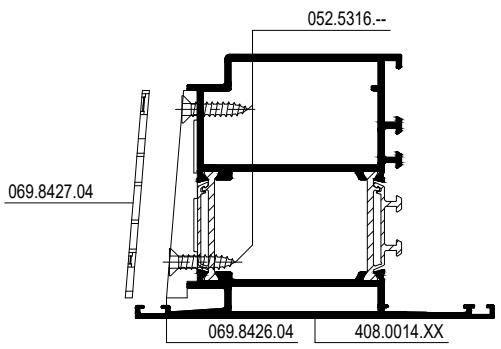

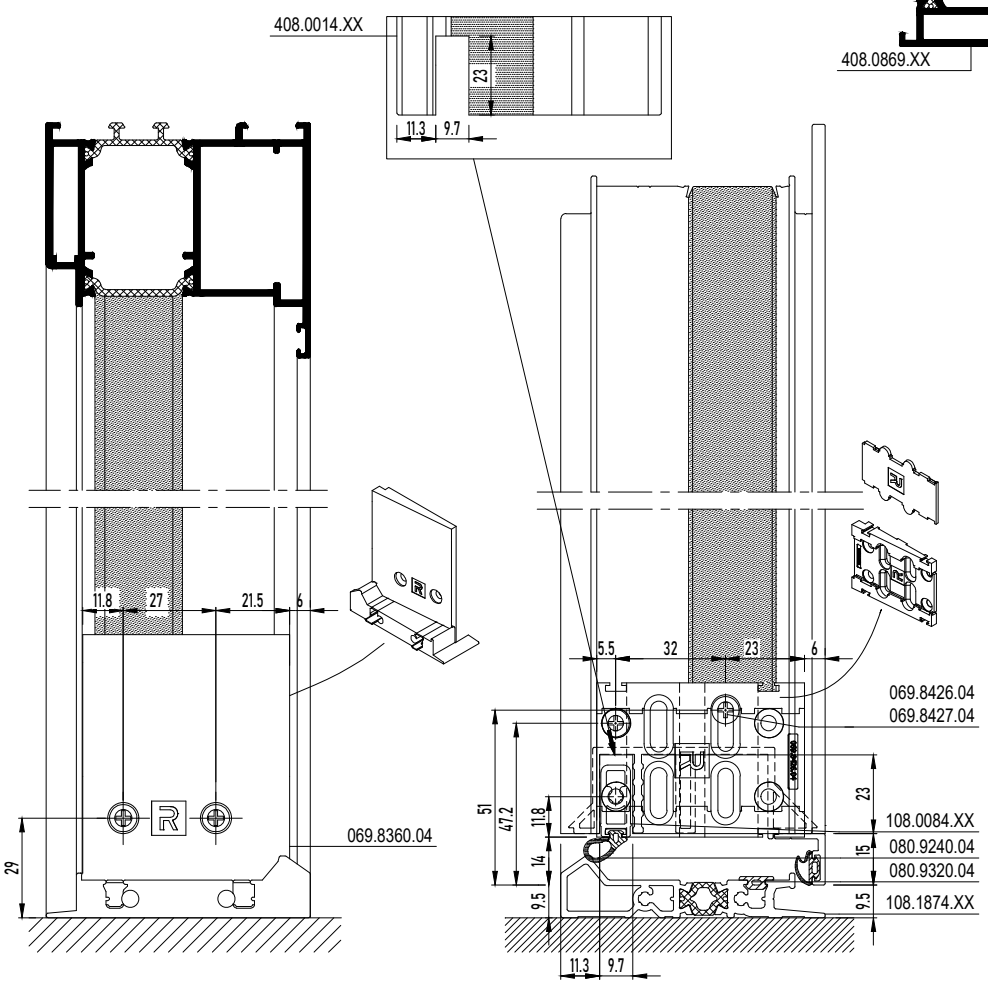

DOOR WEATHER STRIP OUTWARD OPENING

DOOR OUTWARD OPENING WITH DOUBLE WEATHER STRIP - BOTTOM DOOR RAIL

MASTERLINE 8-Fu

095.AKF6.00

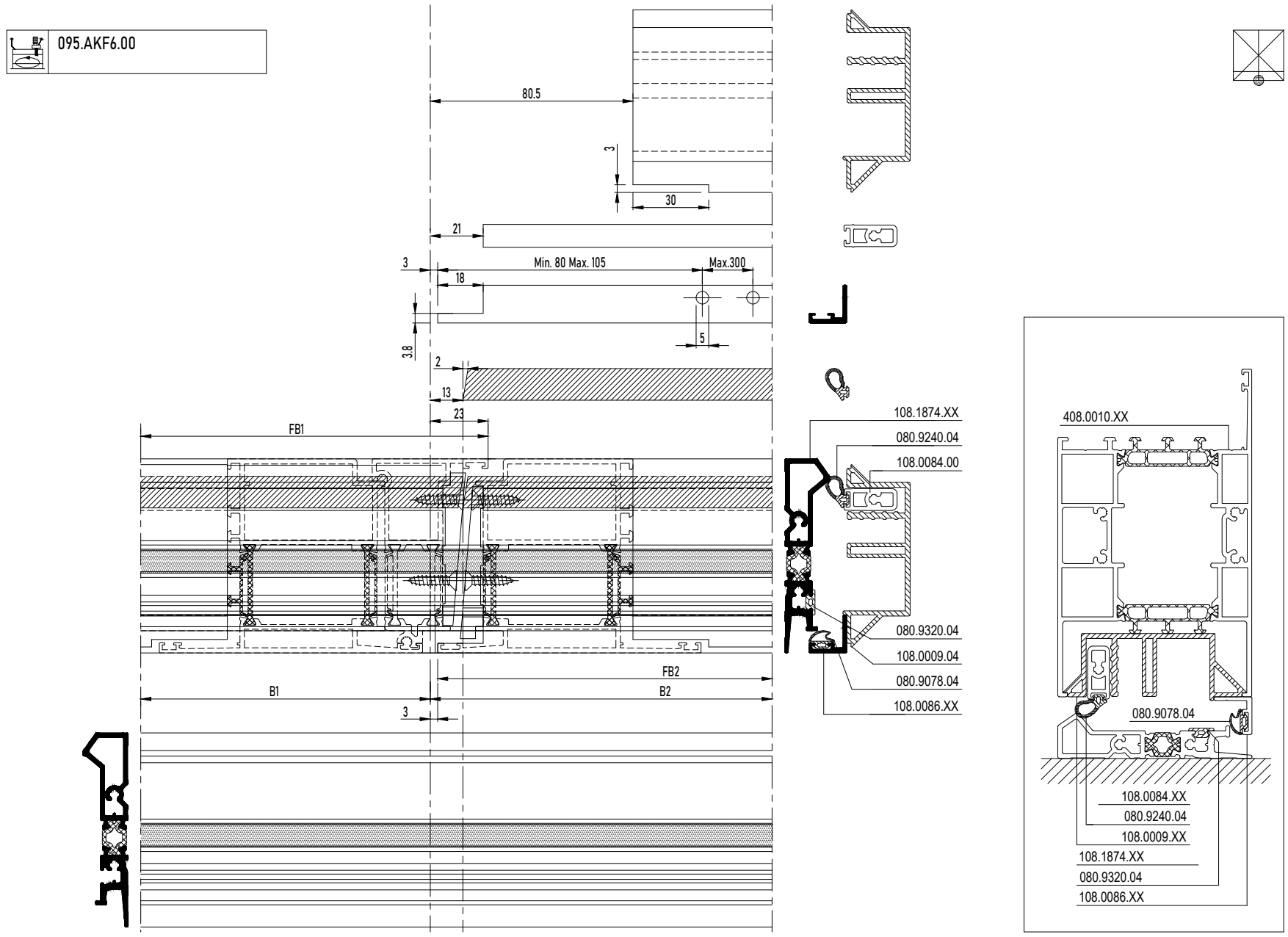

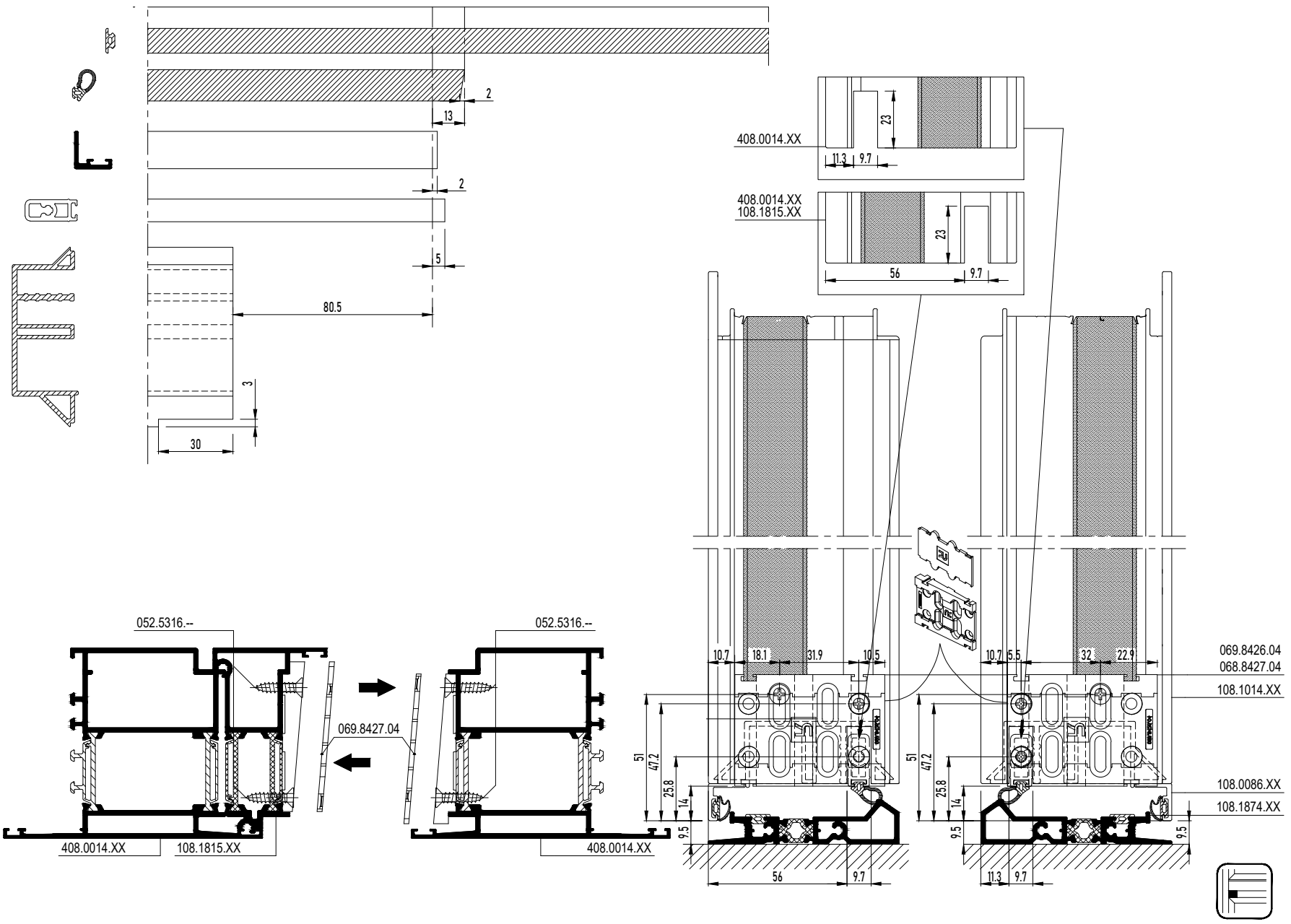

DOOR WEATHER STRIP OUTWARD OPENING

DOOR OUTWARD OPENING WITH DOUBLE WEATHER STRIP - BOTTOM DOOR RAIL

MASTERLINE 8-Fu

095.AKF6.00

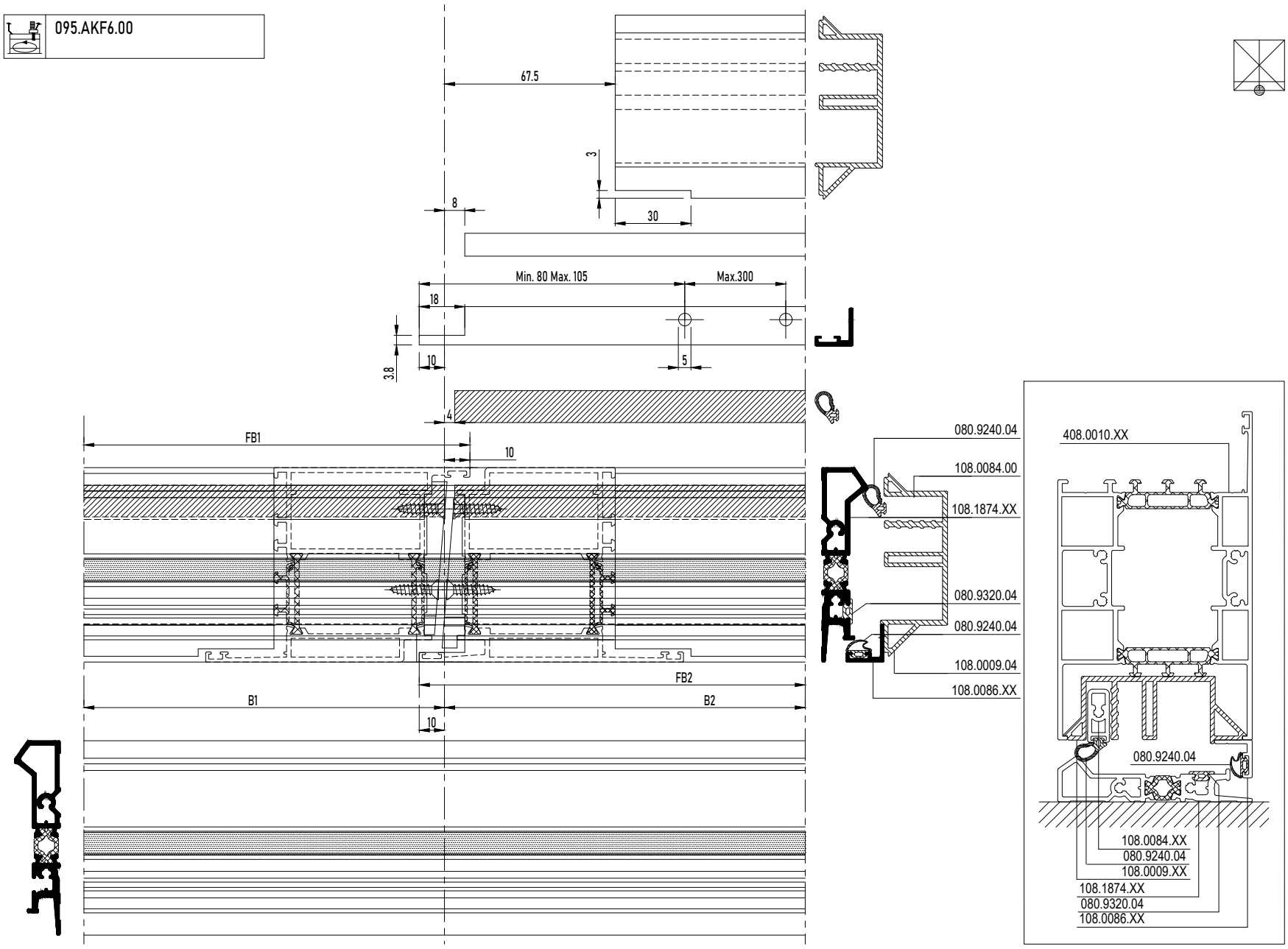

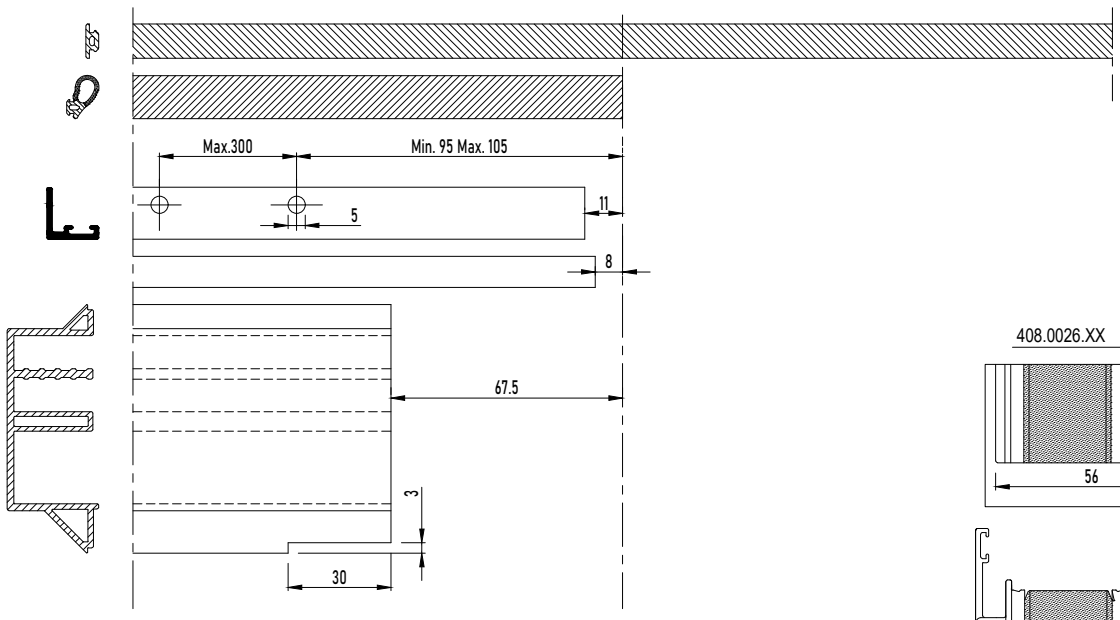

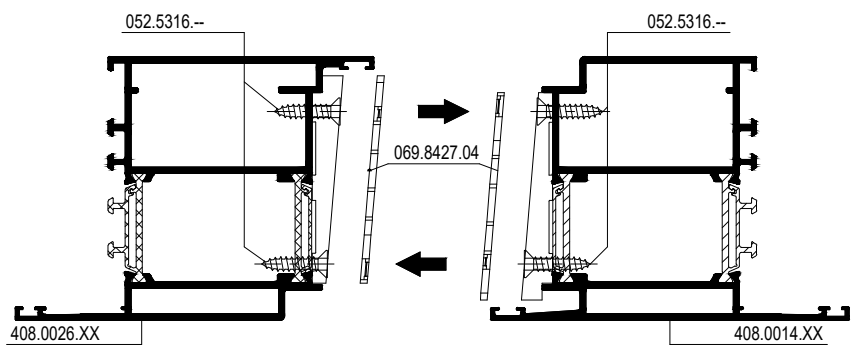

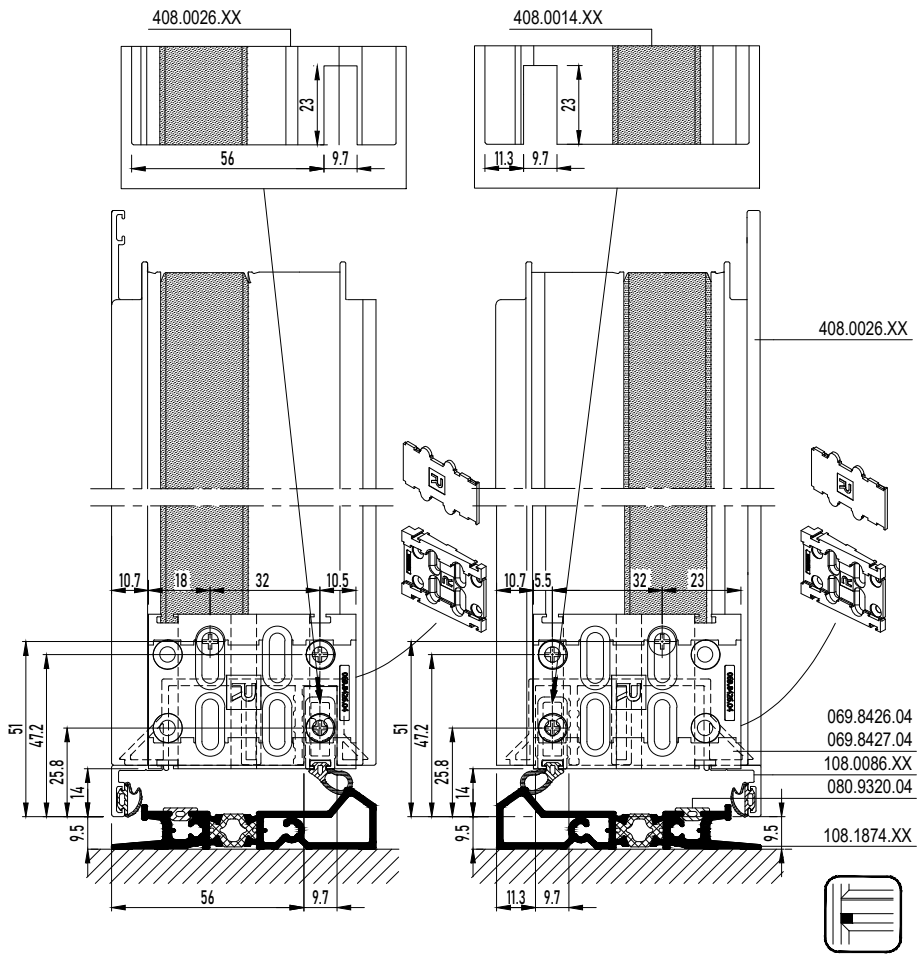

COMBINED DOOR WEATHER STRIP OUTWARD OPENING

COMBINED DOOR OUTWARD OPENING WITH DOUBLE WEATHER STRIP - BOTTOM DOOR RAIL

MASTERLINE 8-Fu

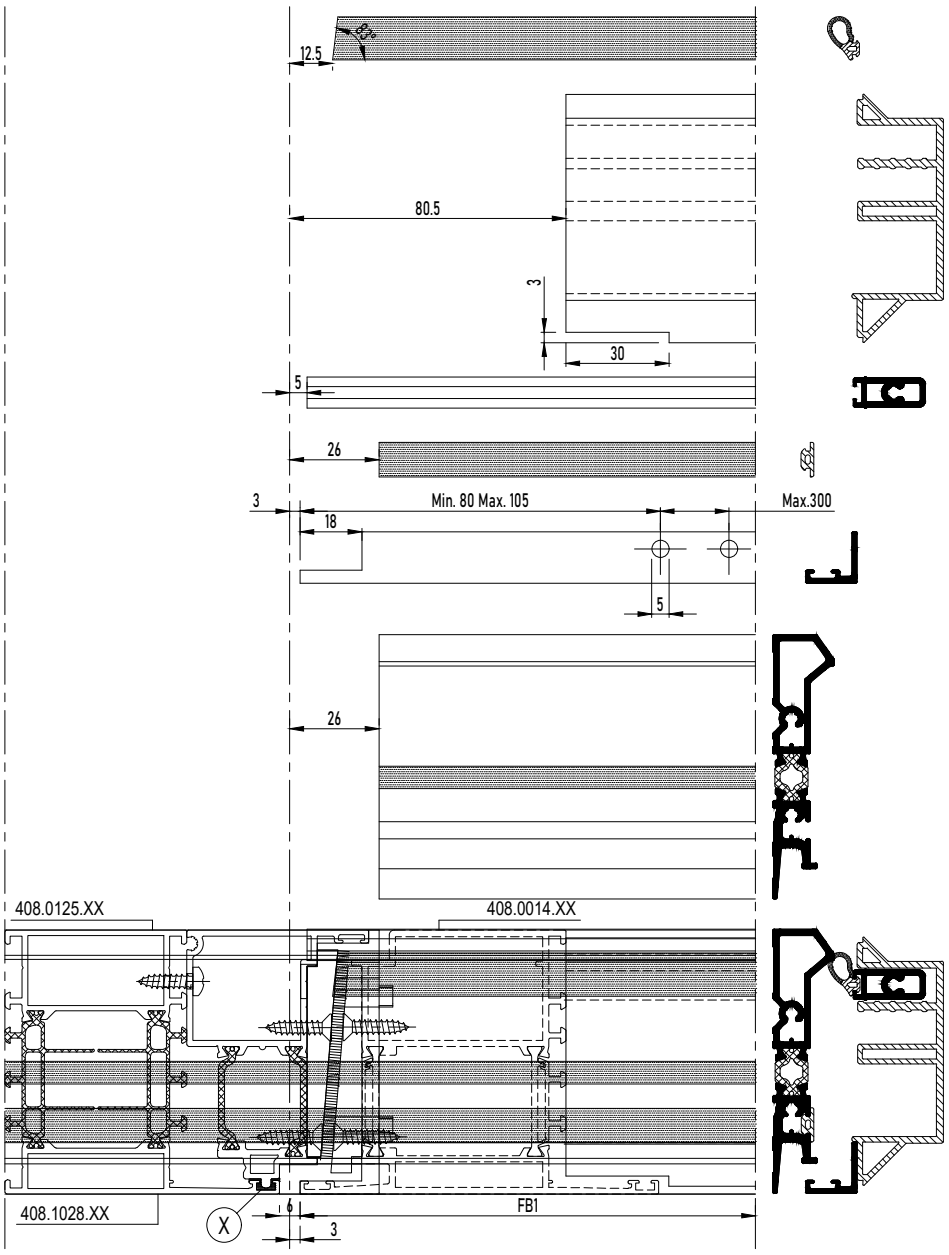

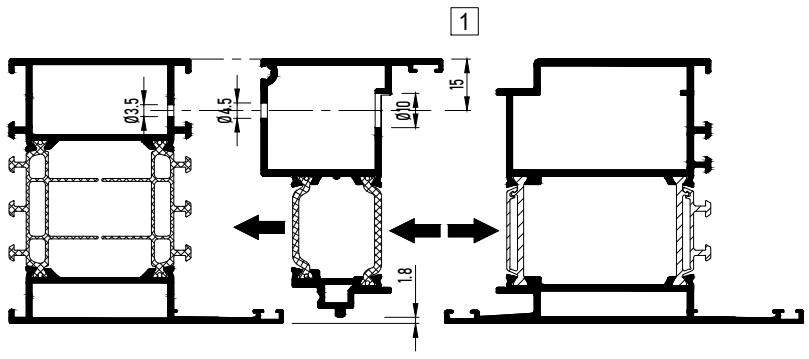

X DICHTINGSMIDDEL
MATIERE D'ETANCHEITE
SEALING AGENT
ABDICHTUNG

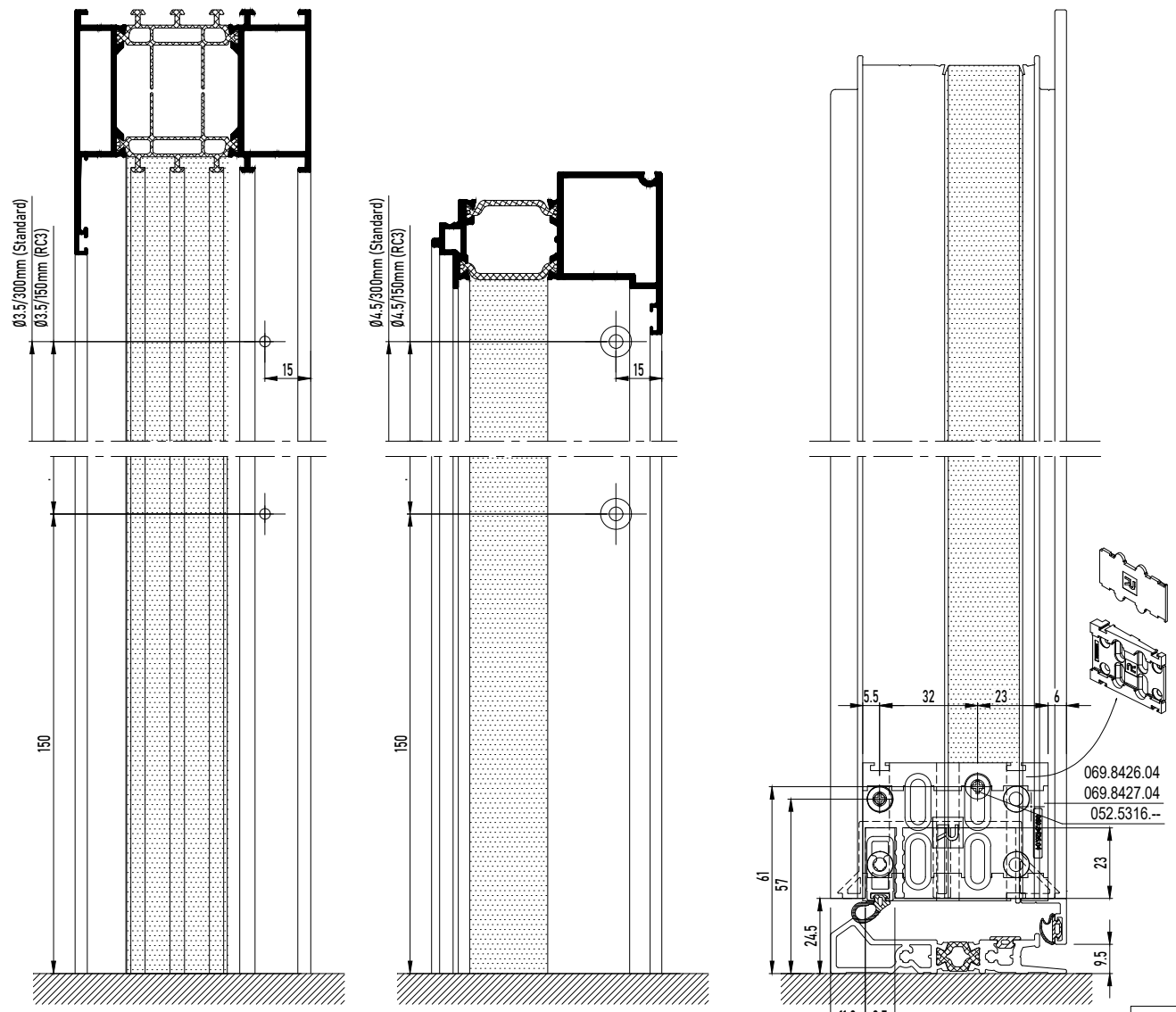

MONTAGEVOLGORDE
L 'ORDRE DE MONTAGE
THE ORDER OF ASSEMBLY
MONTAGEREIHENFOLGE
1 2 3 .

COMBINED DOOR WEATHER STRIP OUTWARD OPENING

COMBINED DOOR OUTWARD OPENING WITH DOUBLE WEATHER STRIP - BOTTOM DOOR RAIL

MASTERLINE 8-Fu

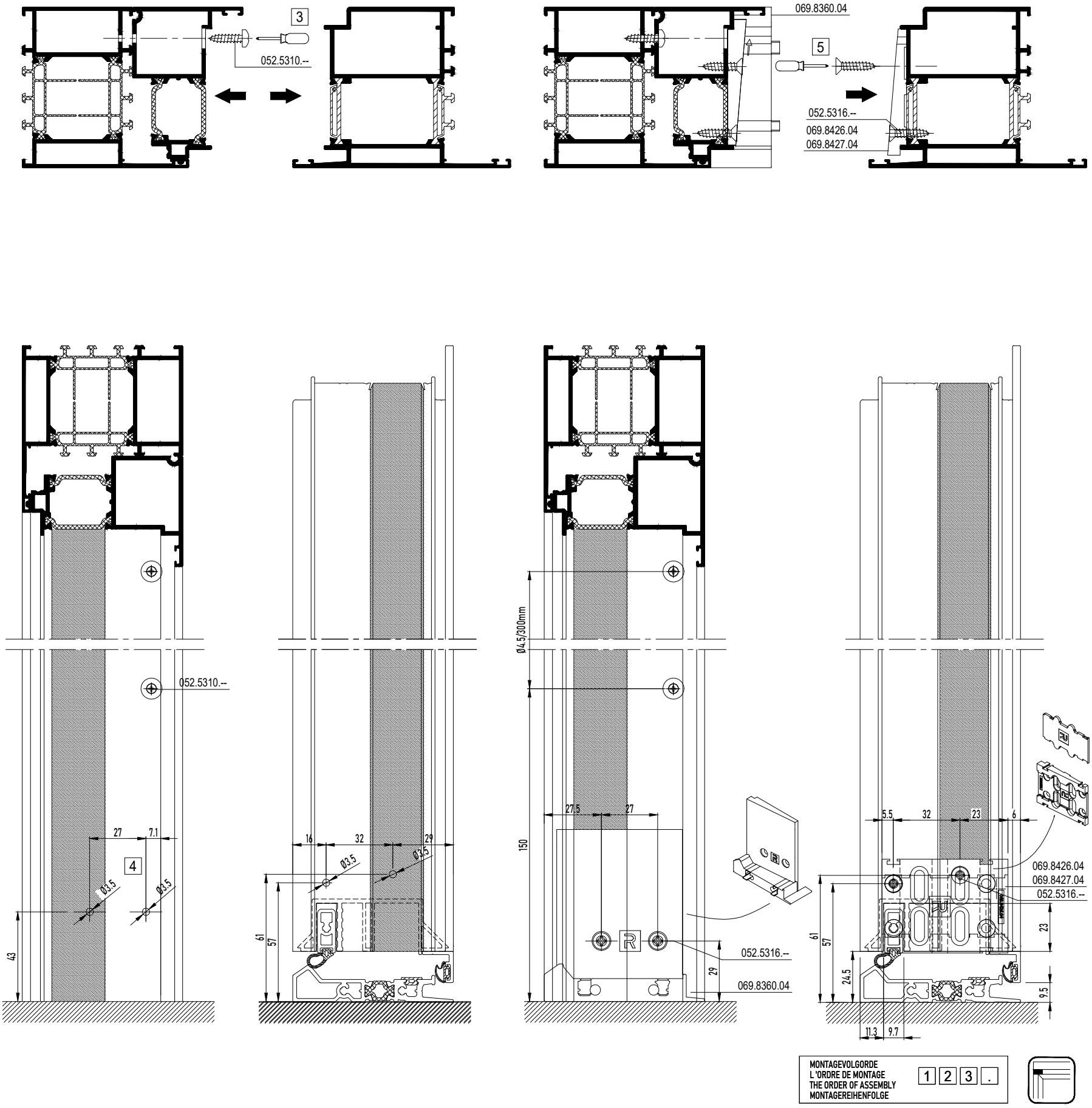

COMBINED DOOR WEATHER STRIP OUTWARD OPENING

COMBINED DOOR OUTWARD OPENING WITH DOUBLE WEATHER STRIP

MASTERLINE 8-Fu

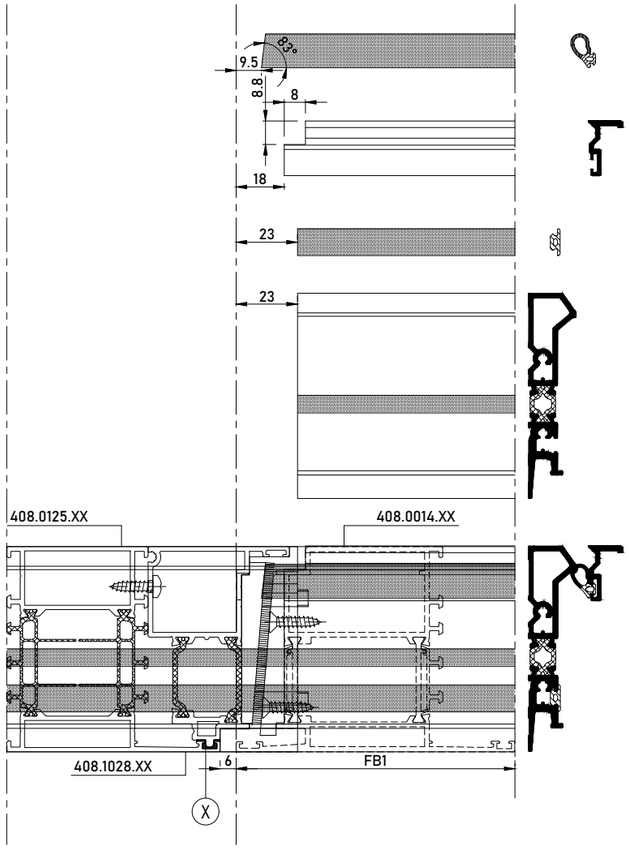

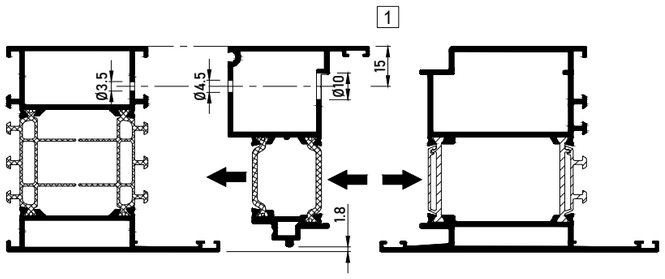

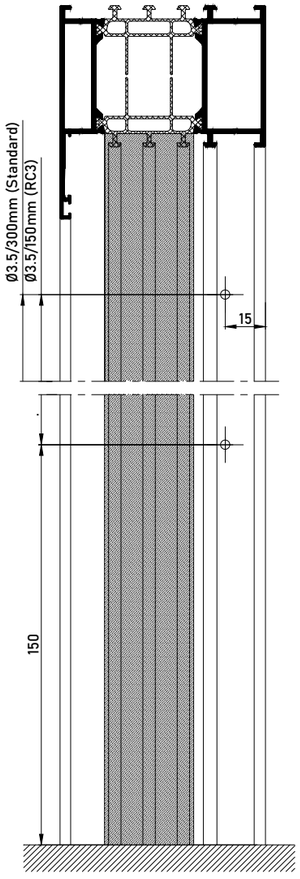

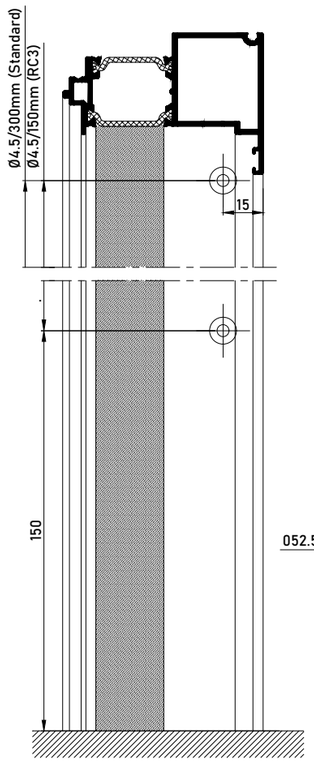

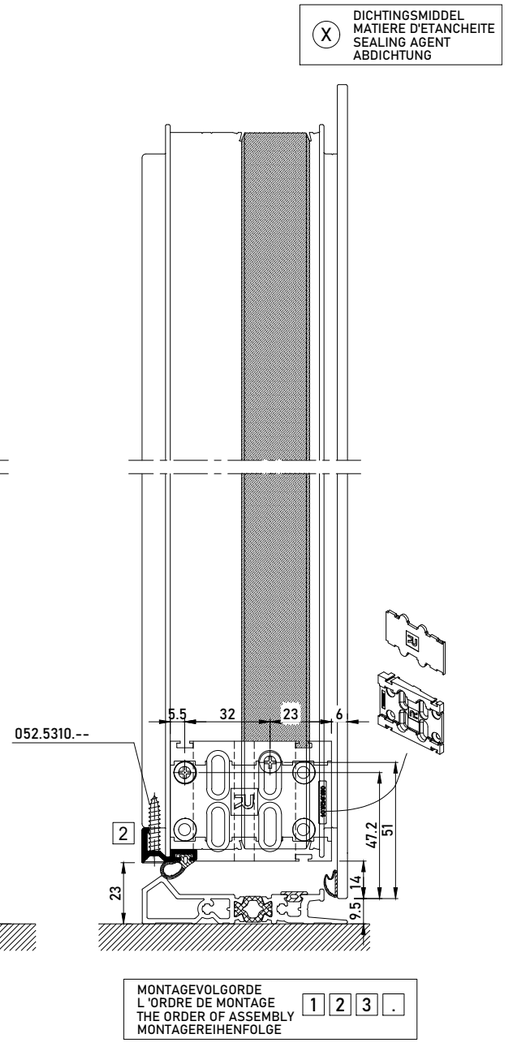

COMBINED DOOR WEATHER STRIP OUTWARD OPENING

COMBINED DOOR OUTWARD OPENING WITH DOUBLE WEATHER STRIP

MASTERLINE 8-Fu

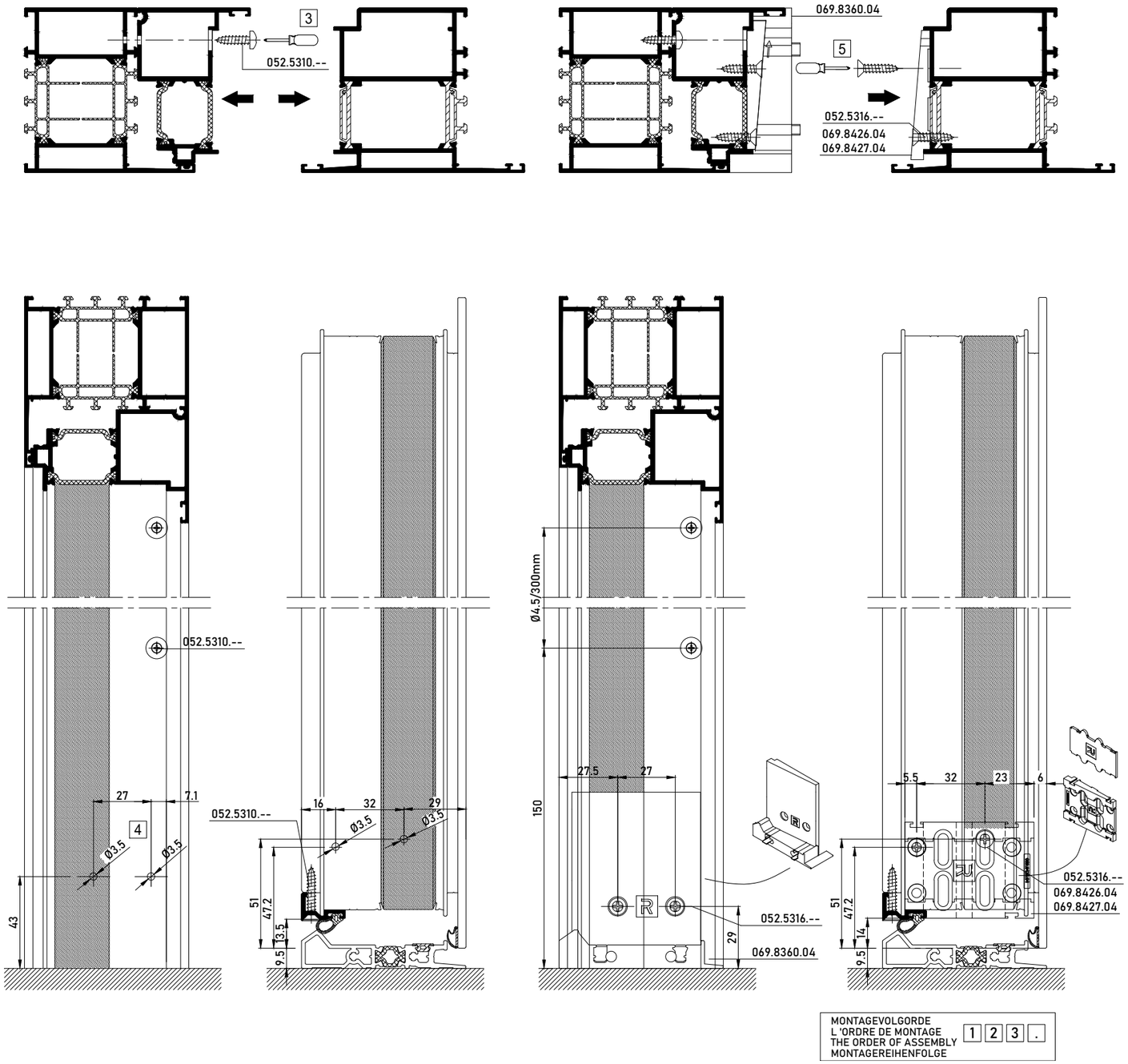

DOOR AUTOMATIC SEALING OUTWARD OPENING

DOOR OUTWARD OPENING WITH AUTOMATIC DRAUGHT EXCLUDER - BOTTOM DOOR RAIL

MASTERLINE 8-Fu

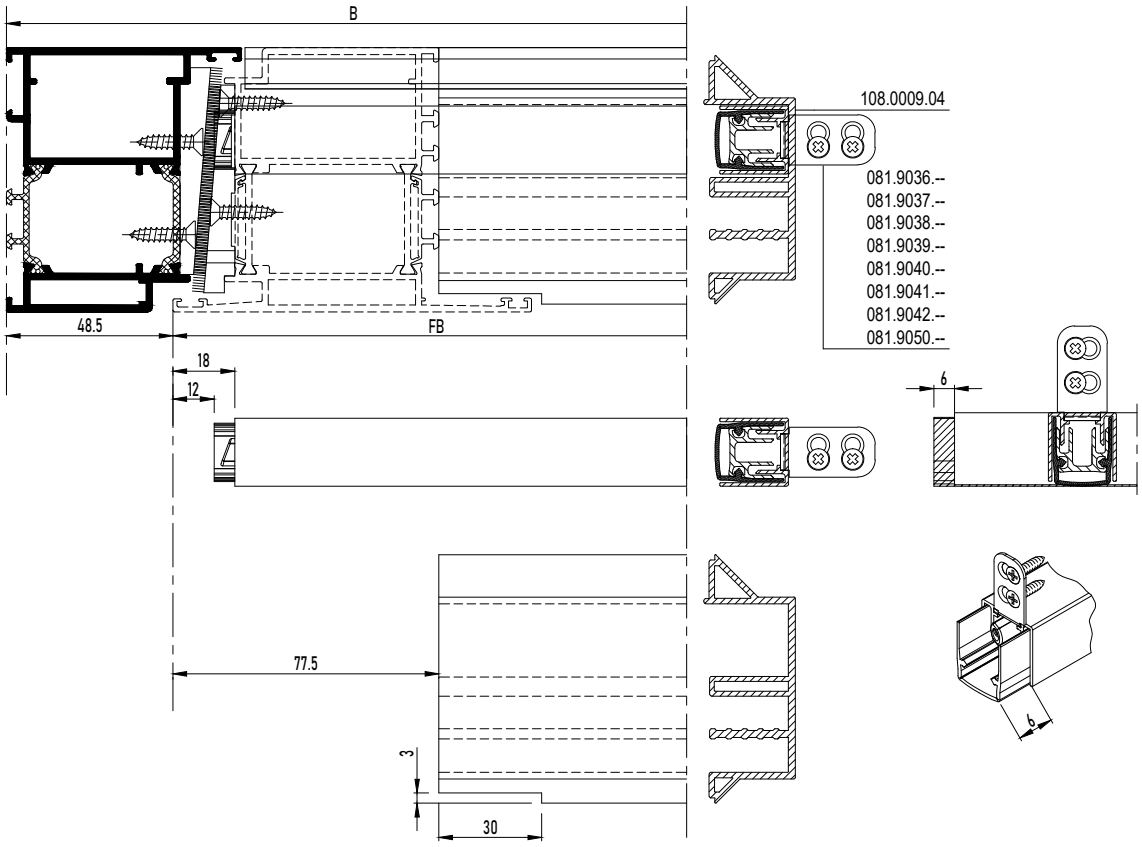

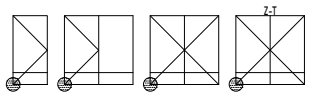

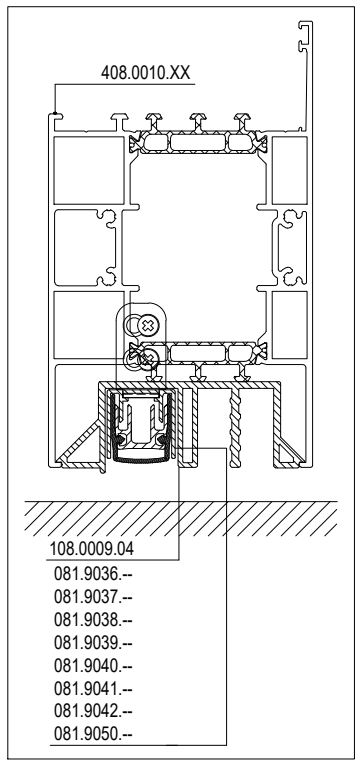

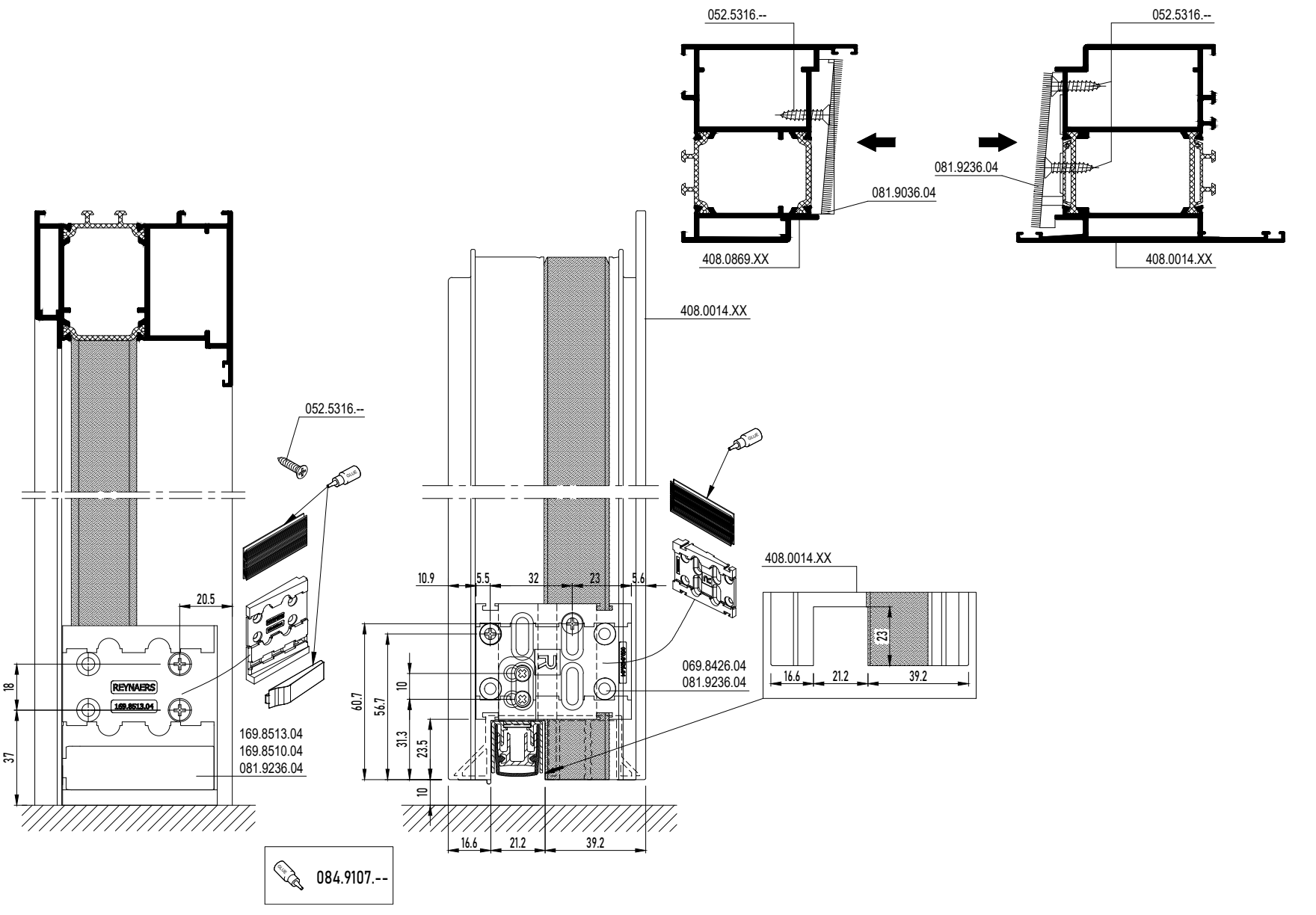

DOOR AUTOMATIC SEALING OUTWARD OPENING

DOOR OUTWARD OPENING WITH AUTOMATIC DRAUGHT EXCLUDER - BOTTOM DOOR RAIL

MASTERLINE 8-Fu

095.AKF6.00

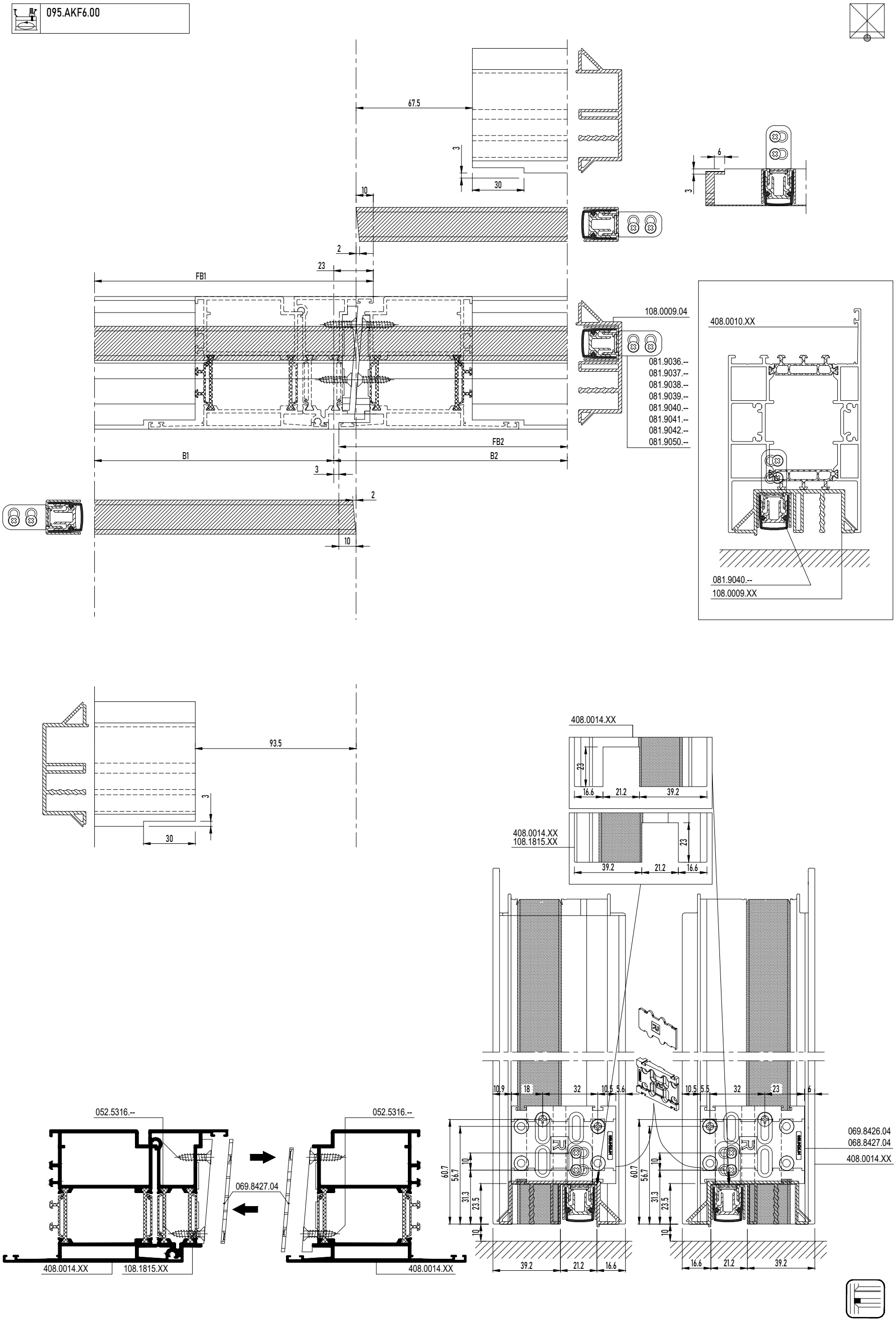

DOOR AUTOMATIC SEALING OUTWARD OPENING

DOOR OUTWARD OPENING WITH AUTOMATIC DRAUGHT EXCLUDER - BOTTOM DOOR RAIL

MASTERLINE 8-Fu

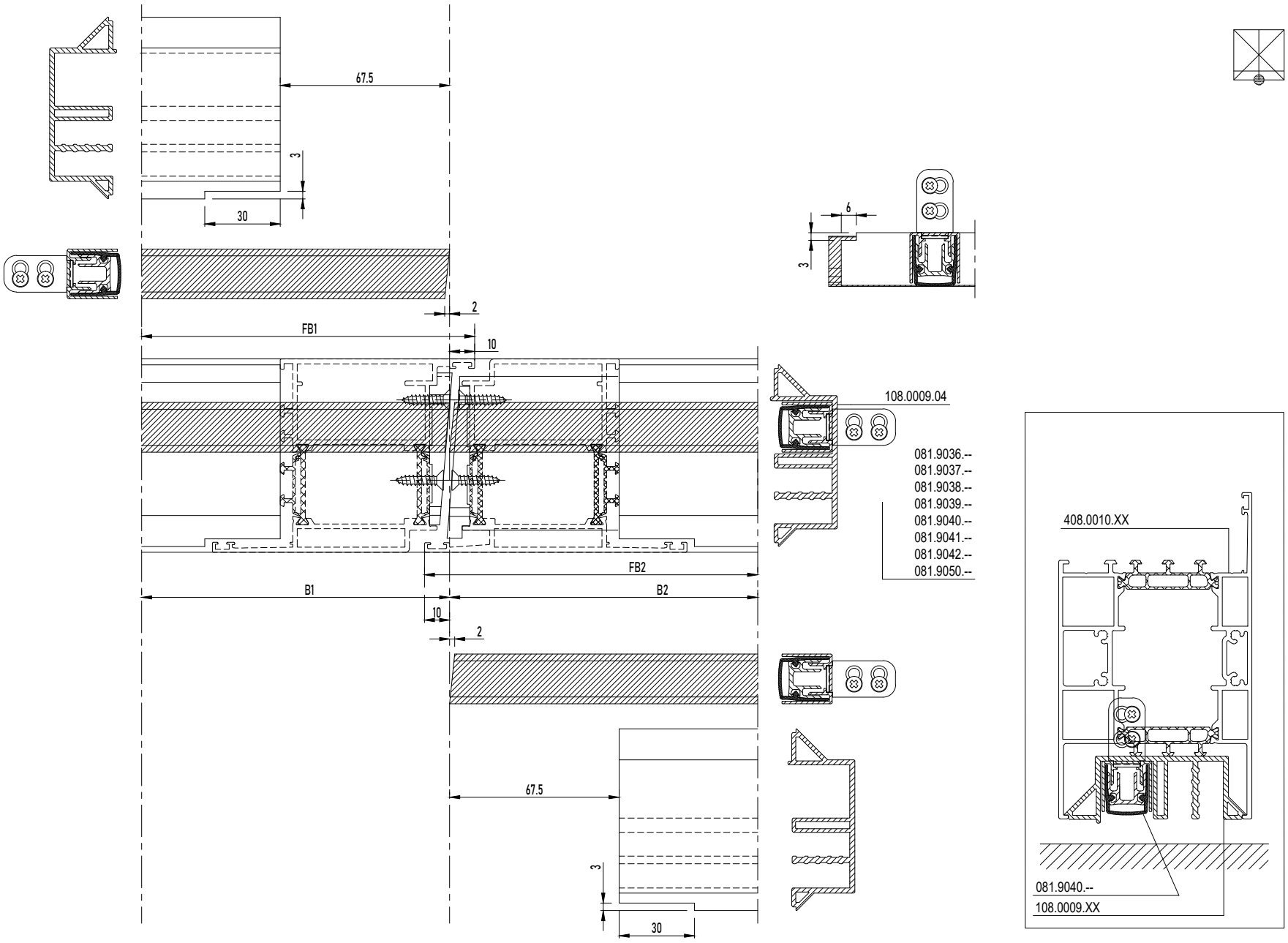

095.AKF6.00

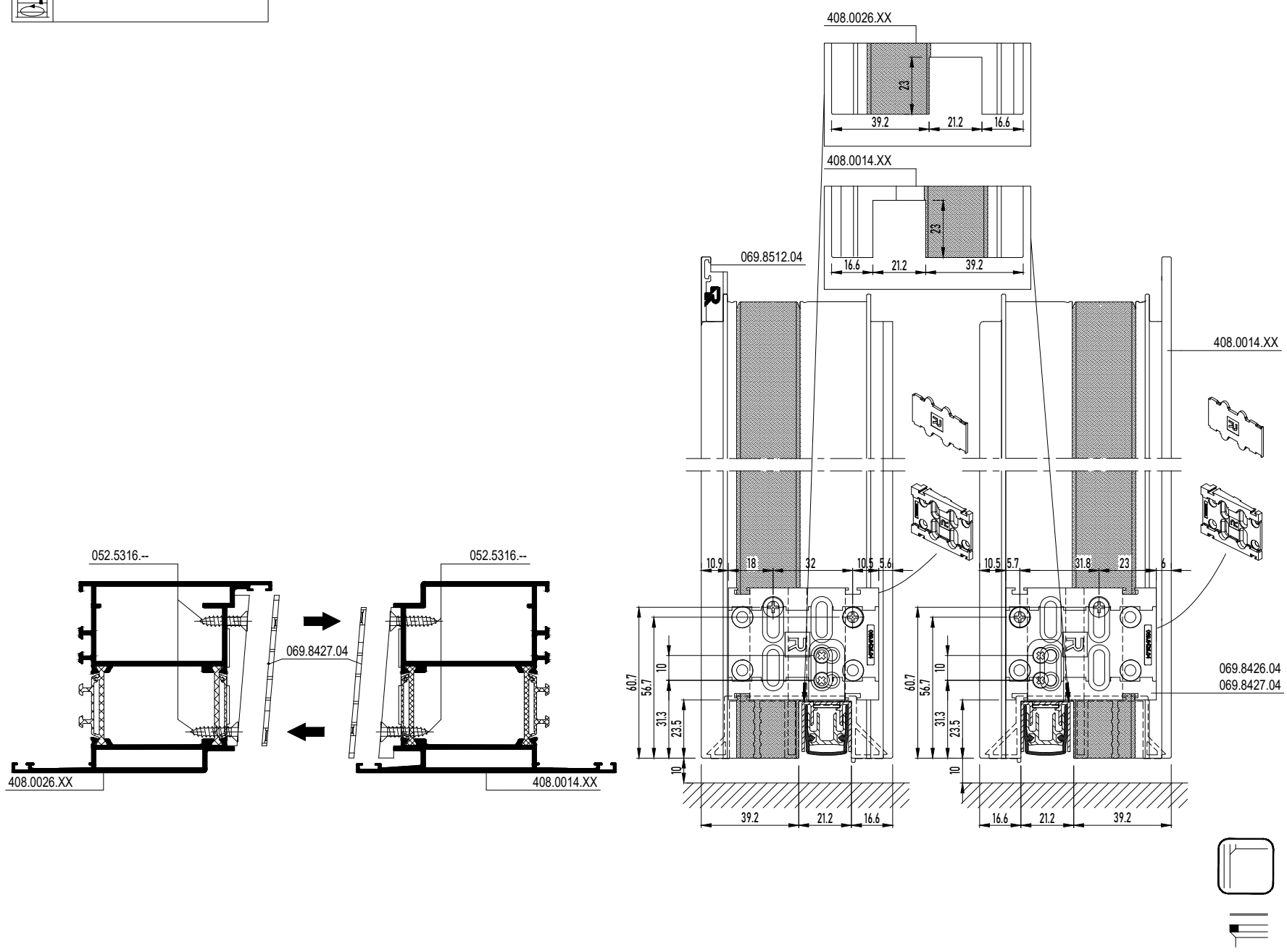

DOOR AUTOMATIC SEALING OUTWARD OPENING

DOOR OUTWARD OPENING WITH AUTOMATIC DRAUGHT EXCLUDER

MASTERLINE 8-Fu

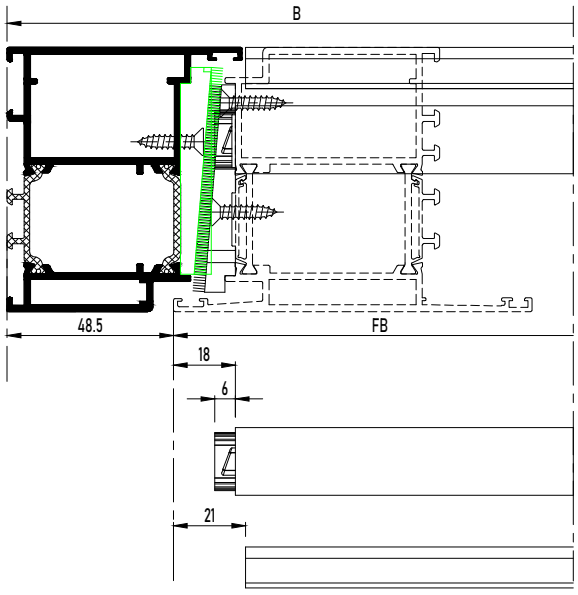

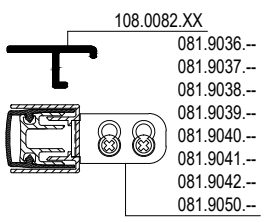

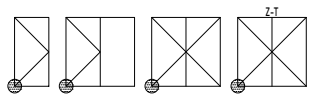

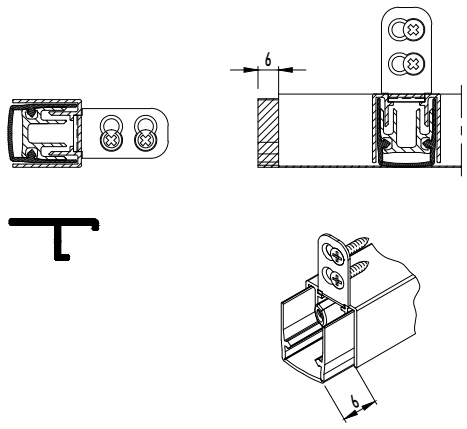

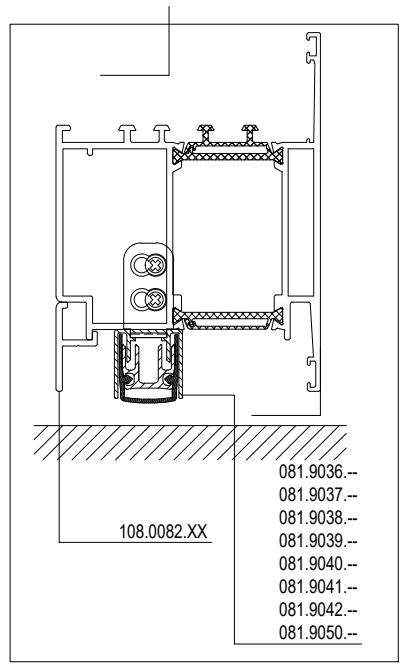

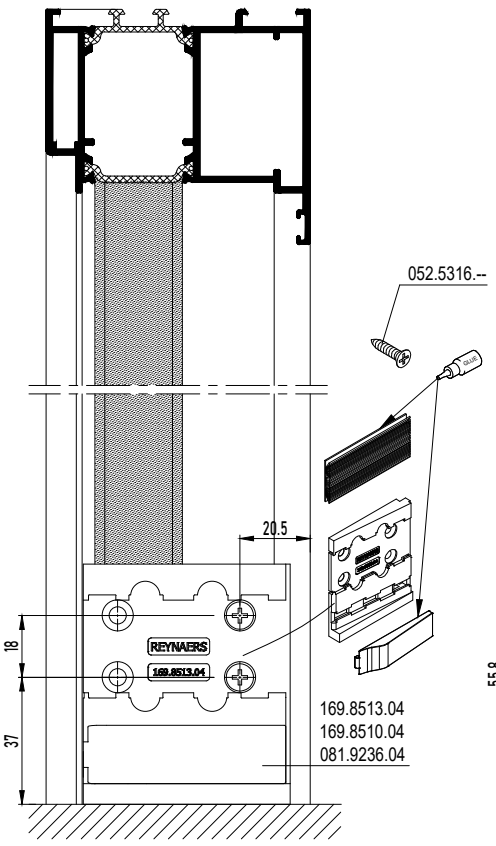

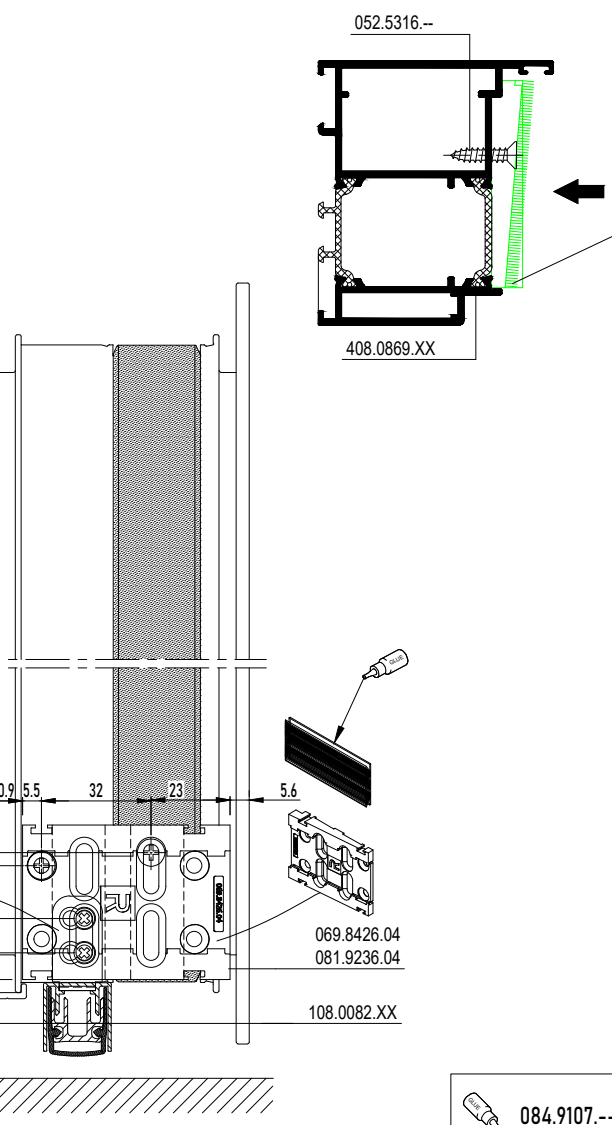

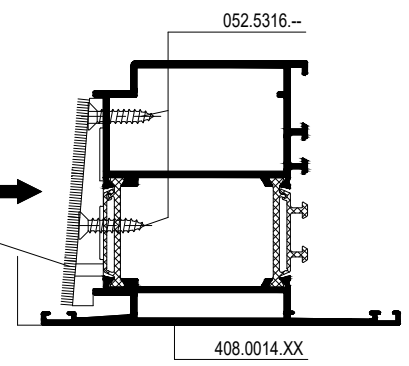



DOOR AUTOMATIC SEALING OUTWARD OPENING

DOOR OUTWARD OPENING WITH AUTOMATIC DRAUGHT EXCLUDER

MASTERLINE 8-Fu

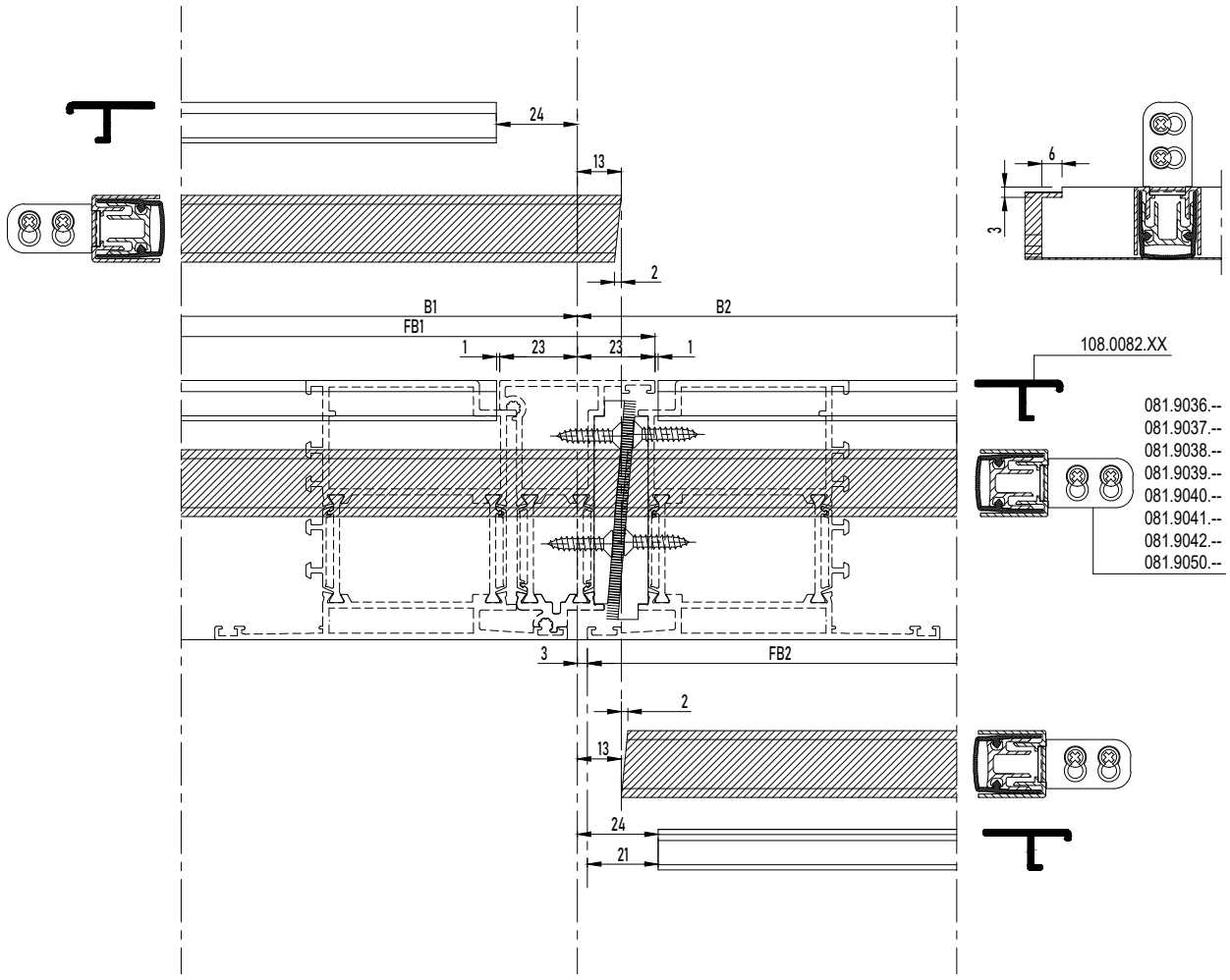

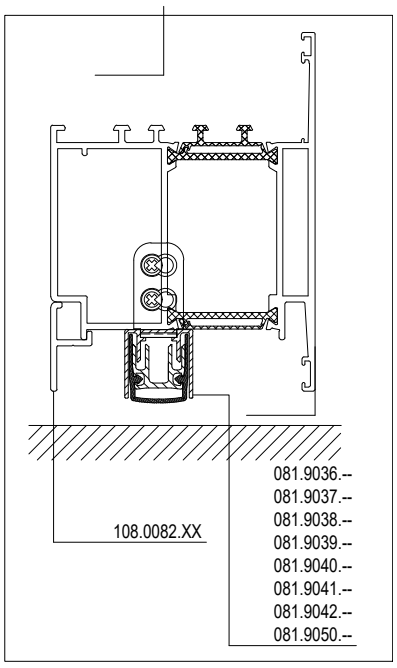

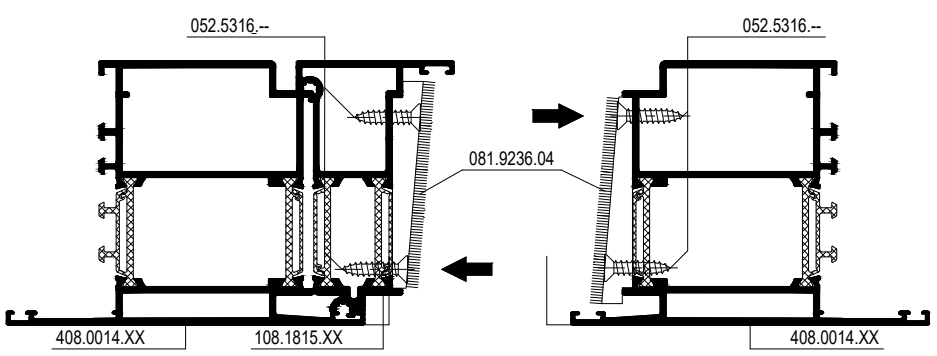

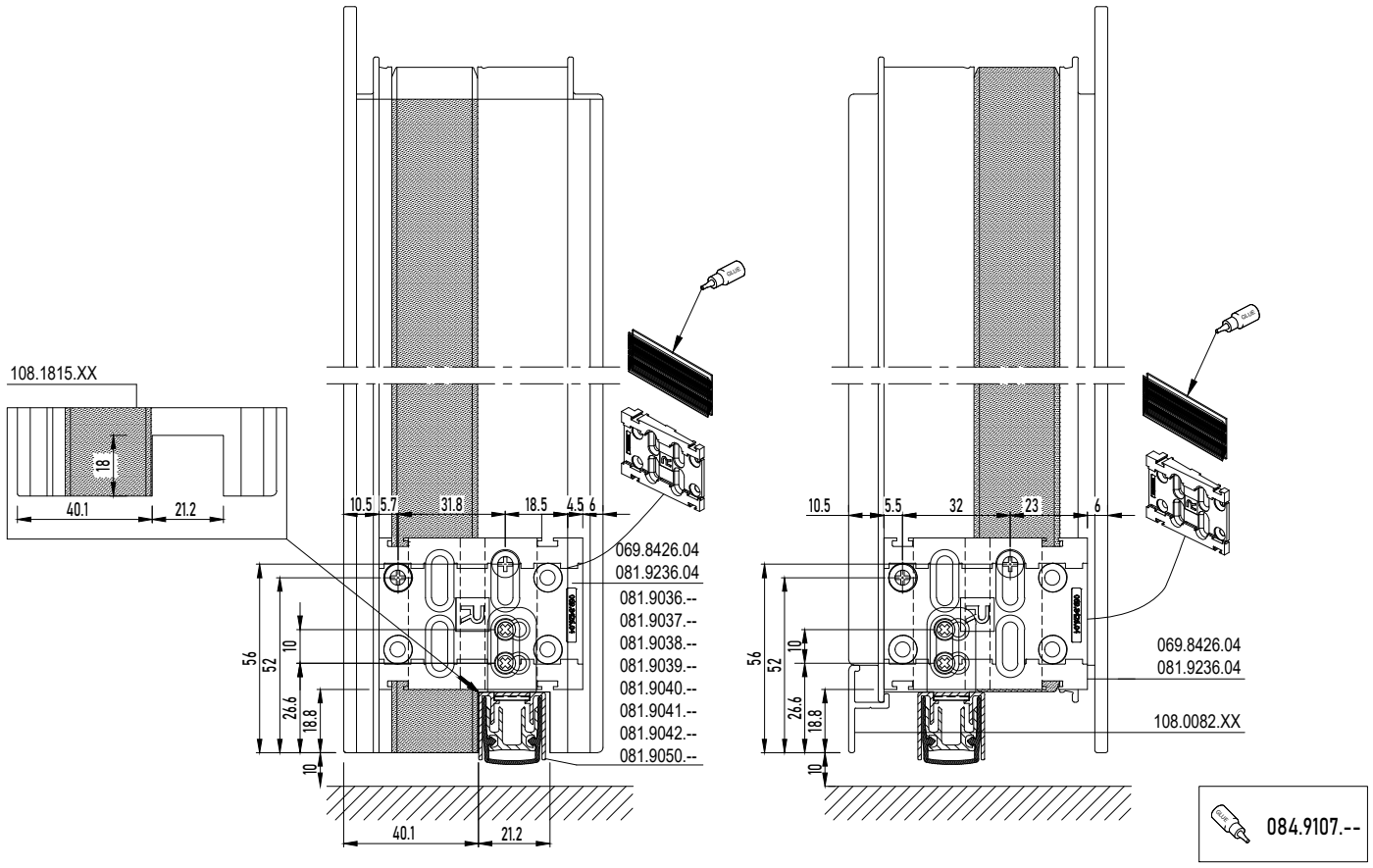

DOOR AUTOMATIC SEALING OUTWARD OPENING

DOOR OUTWARD OPENING WITH AUTOMATIC DRAUGHT EXCLUDER

MASTERLINE 8-Fu

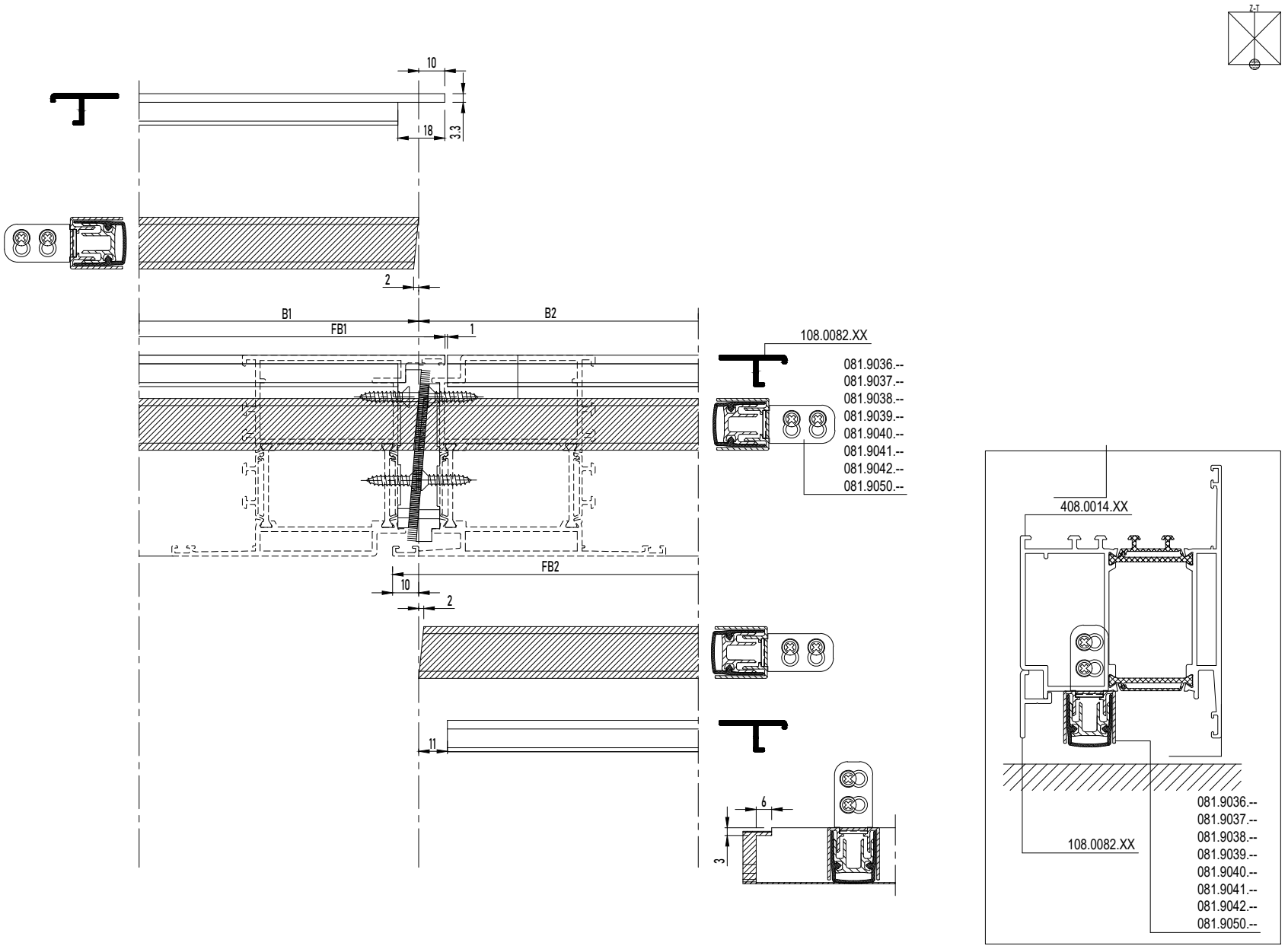

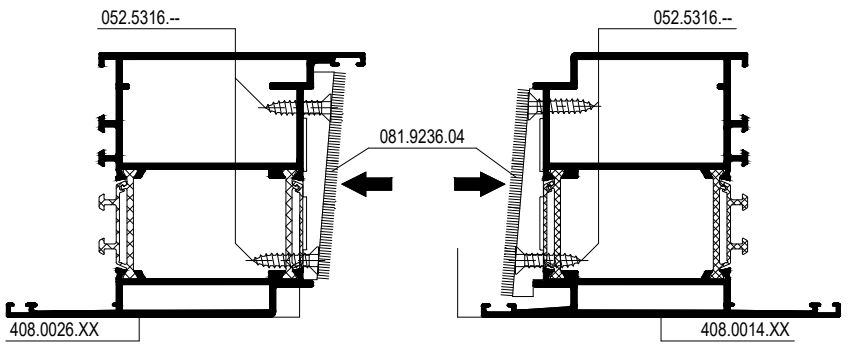

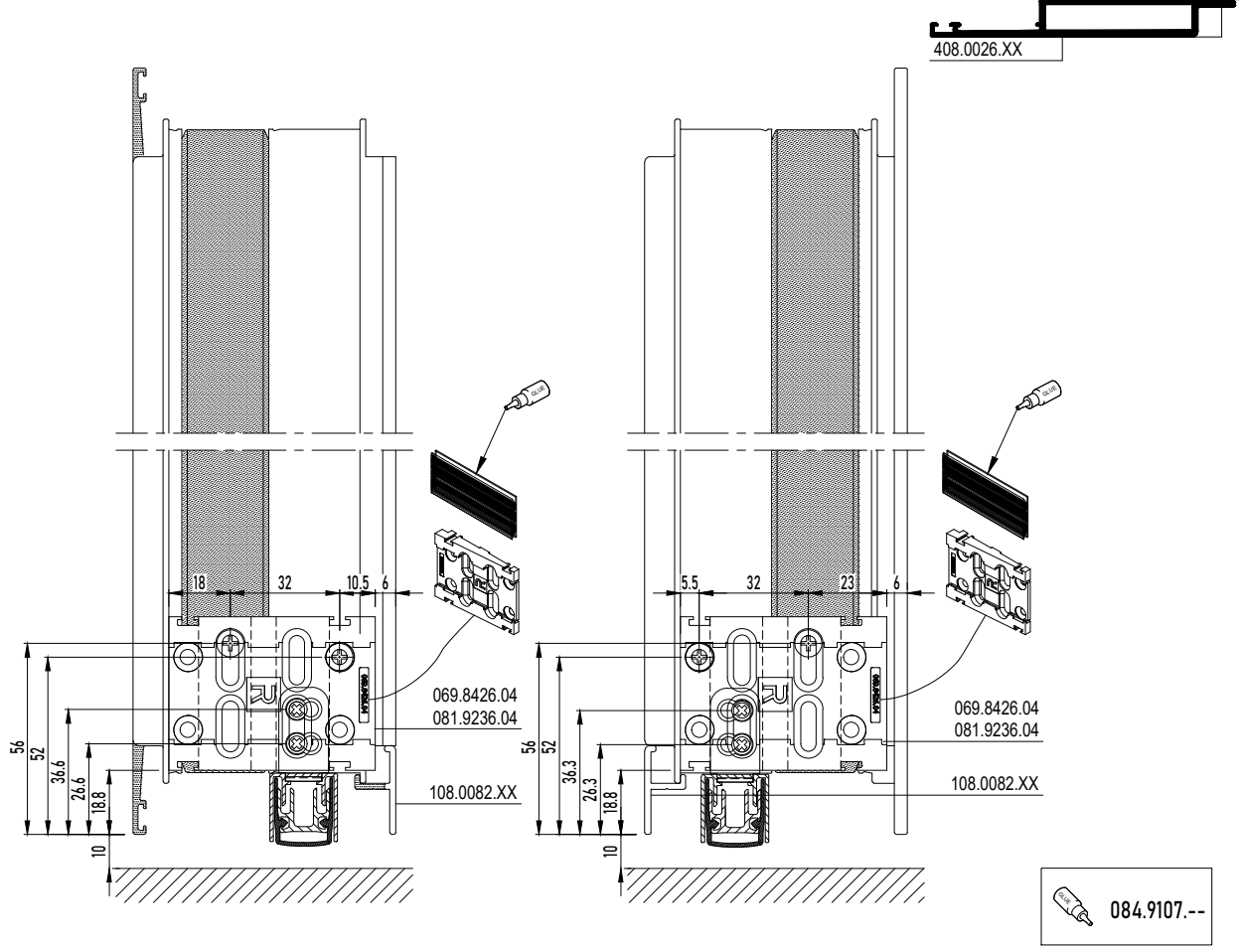

COMBINED DOOR AUTOMATIC SEALING OUTWARD OPENING

COMBINED DOOR OUTWARD OPENING WITH AUTOMATIC DRAUGHT EXCLUDER

MASTERLINE 8-Fu

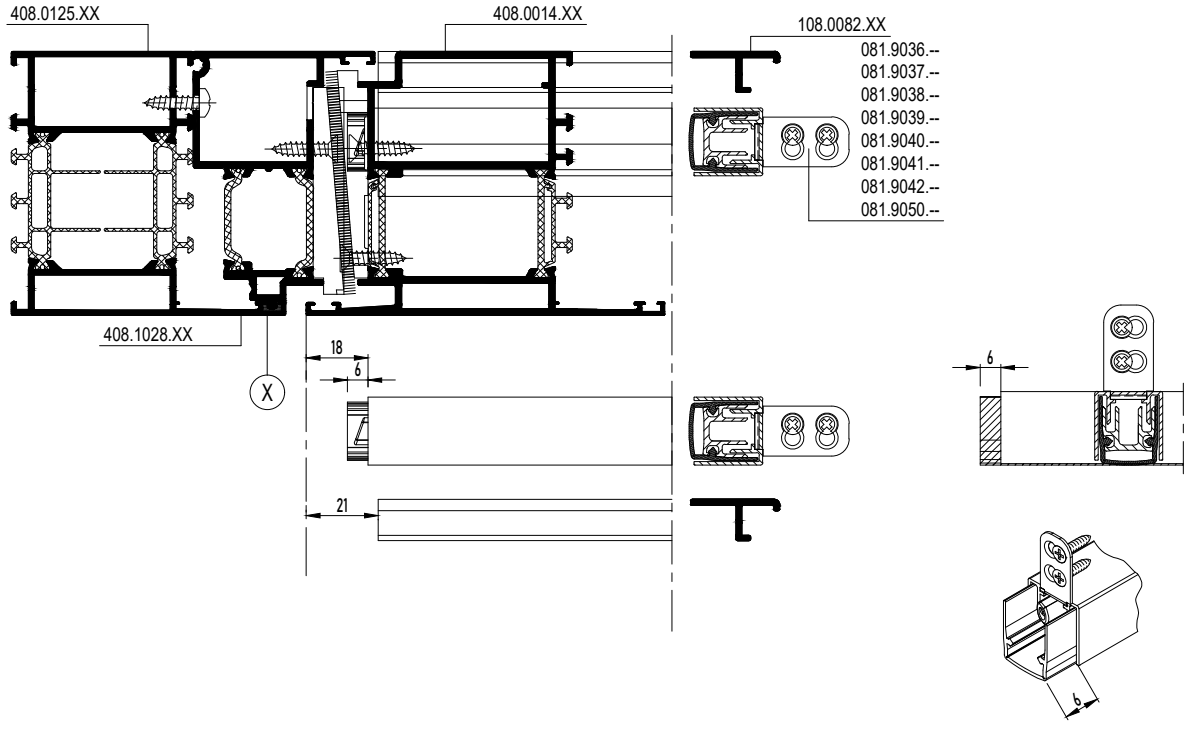

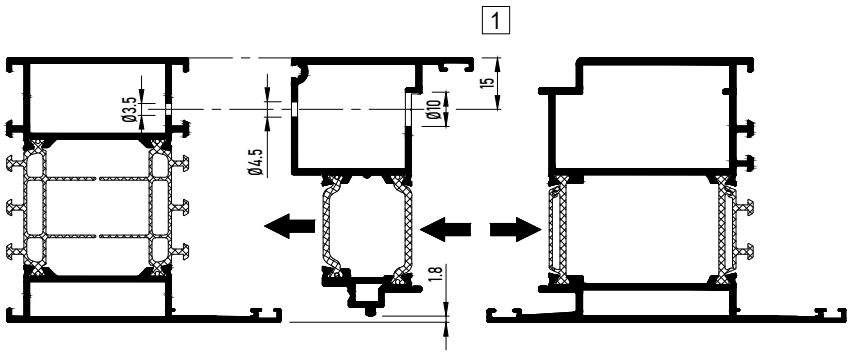

X DICHTINGSMIDDEL
MATIERE D'ETANCHEITE
SEALING AGENT
ABDICHTUNG

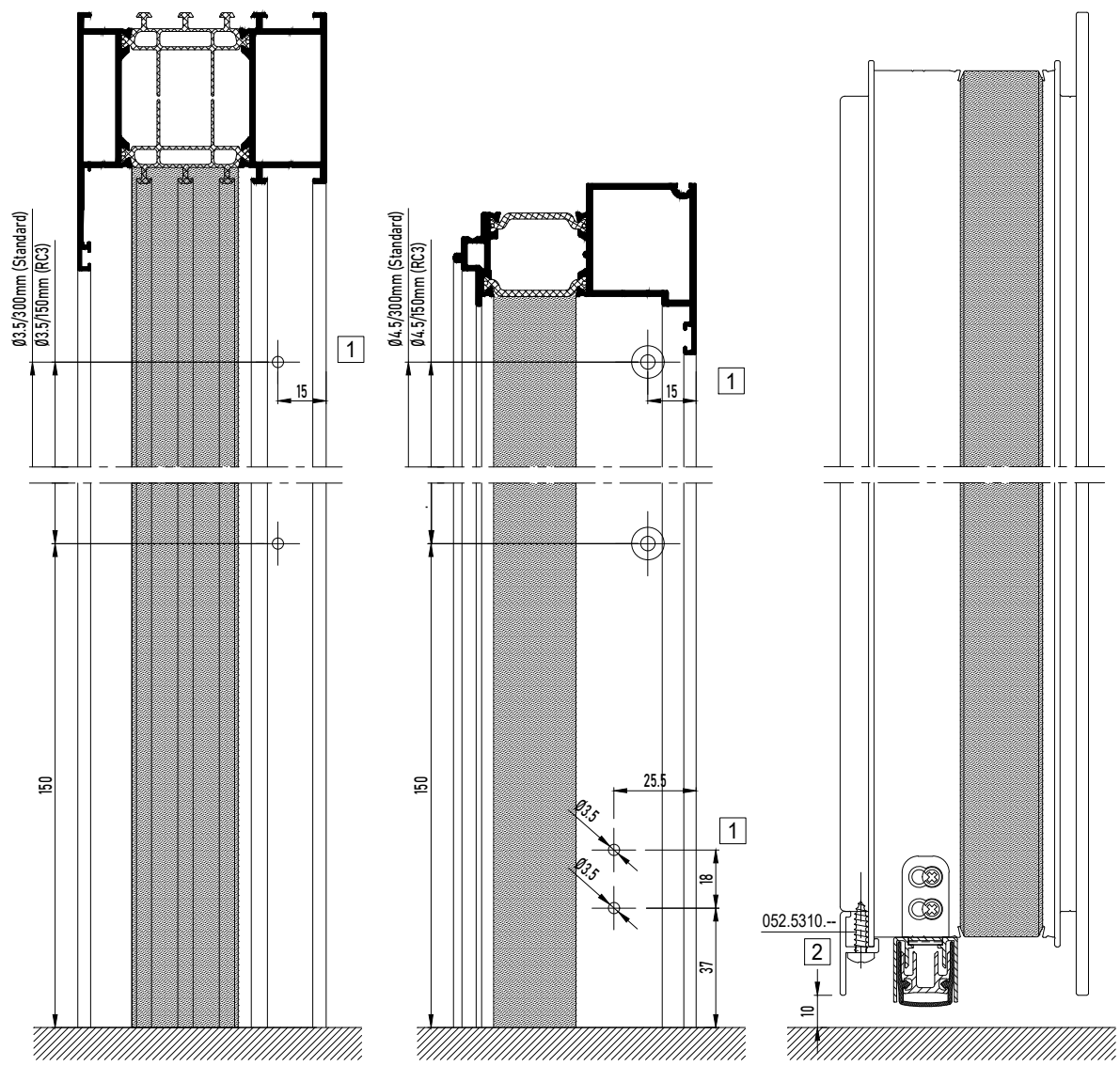

MONTAGEVOLGORDE
L'ORDRE DE MONTAGE
THE ORDER OF ASSEMBLY
MONTAGEREIHENFOLGE
1 2 3 .

COMBINED DOOR AUTOMATIC SEALING OUTWARD OPENING

COMBINED DOOR OUTWARD OPENING WITH AUTOMATIC DRAUGHT EXCLUDER

MASTERLINE 8-Fu



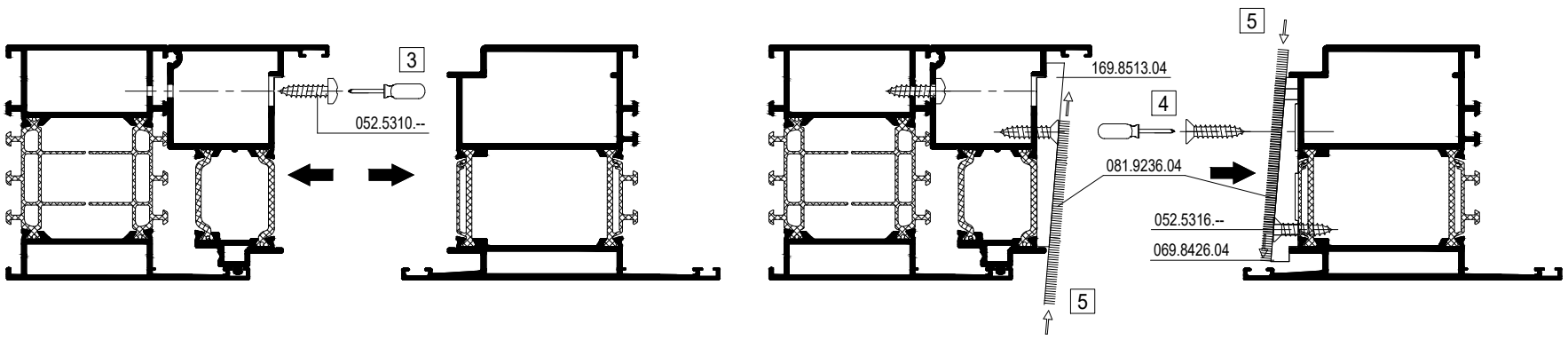

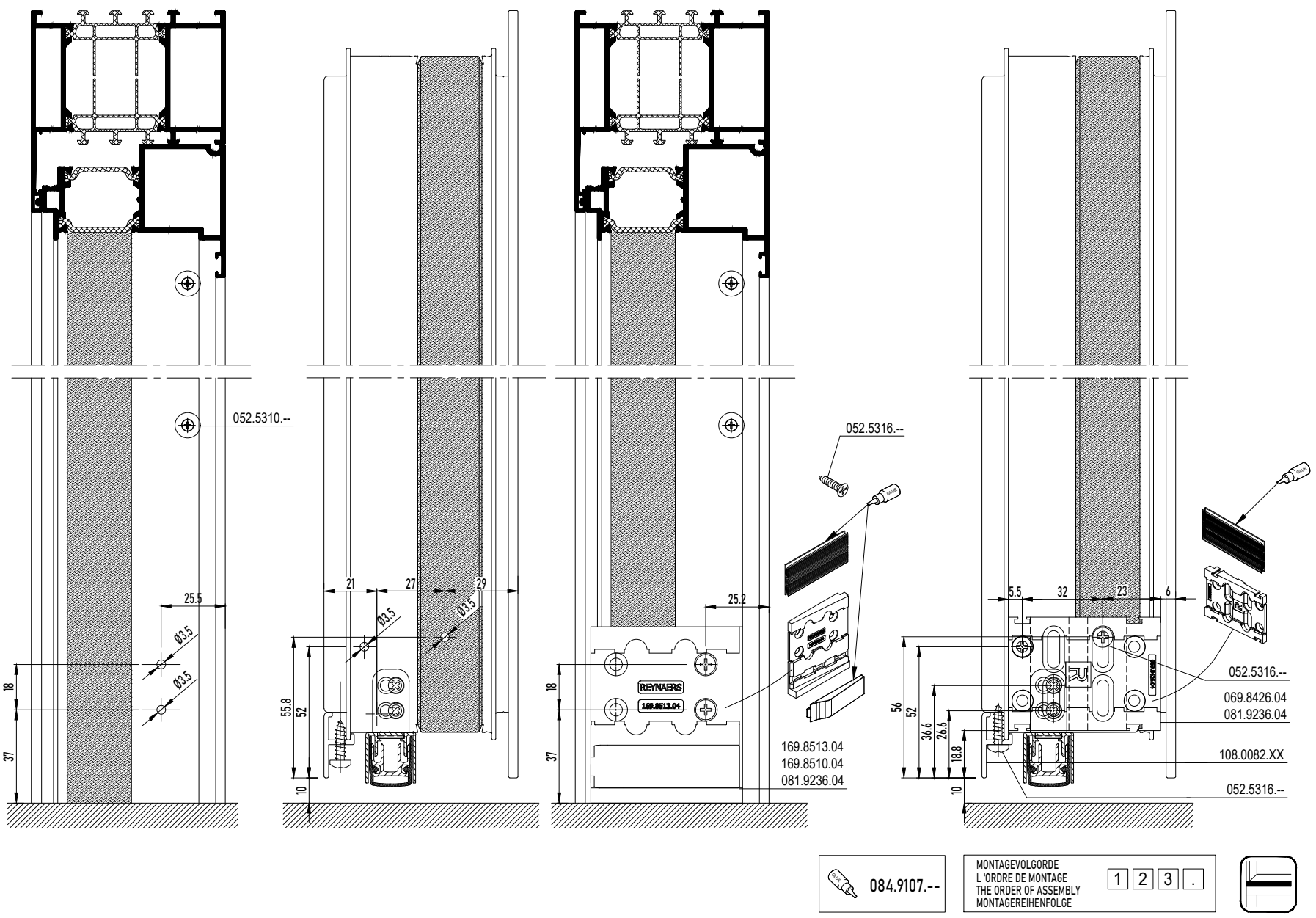

084.9107.--

MONTAGEVOLGORDE
L'ORDRE DE MONTAGE
THE ORDER OF ASSEMBLY
MONTAGEREIHENFOLGE
1 2 3 .

COMBINED DOOR AUTOMATIC SEALING OUTWARD OPENING

COMBINED DOOR OUTWARD OPENING WITH AUTOMATIC DRAUGHT EXCLUDER - BOTTOM DOOR RAIL

MASTERLINE 8-Fu

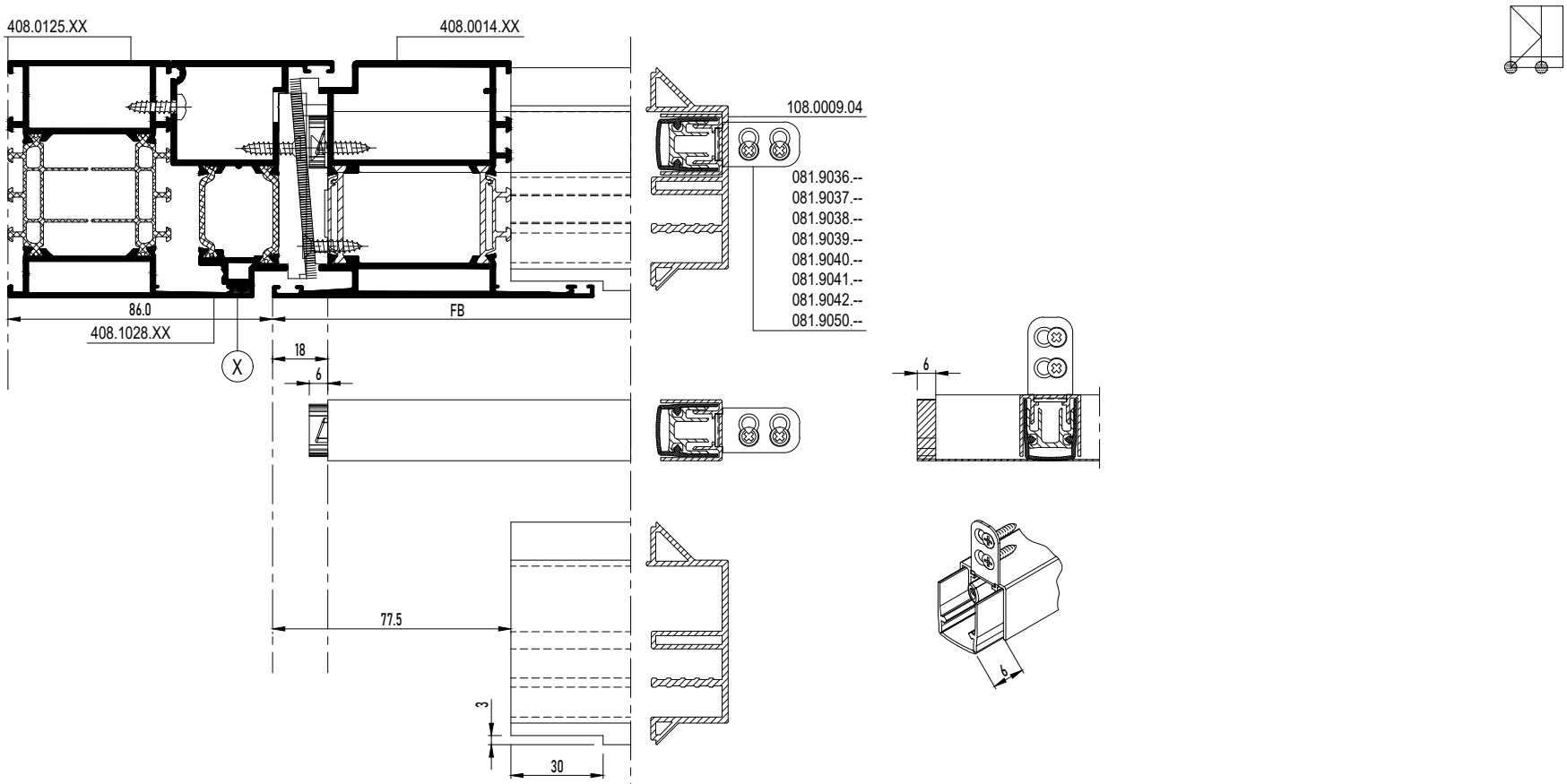

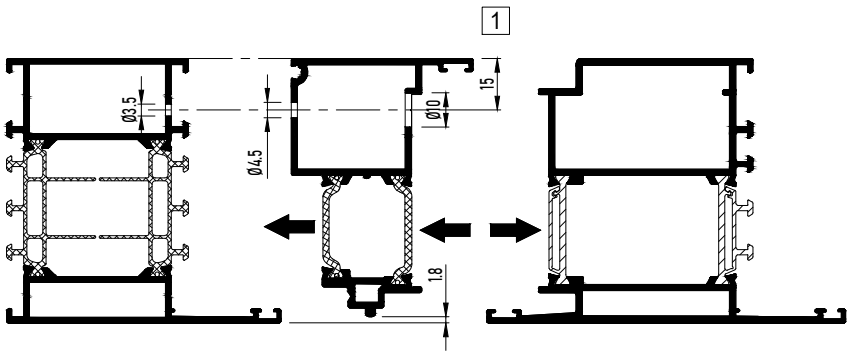

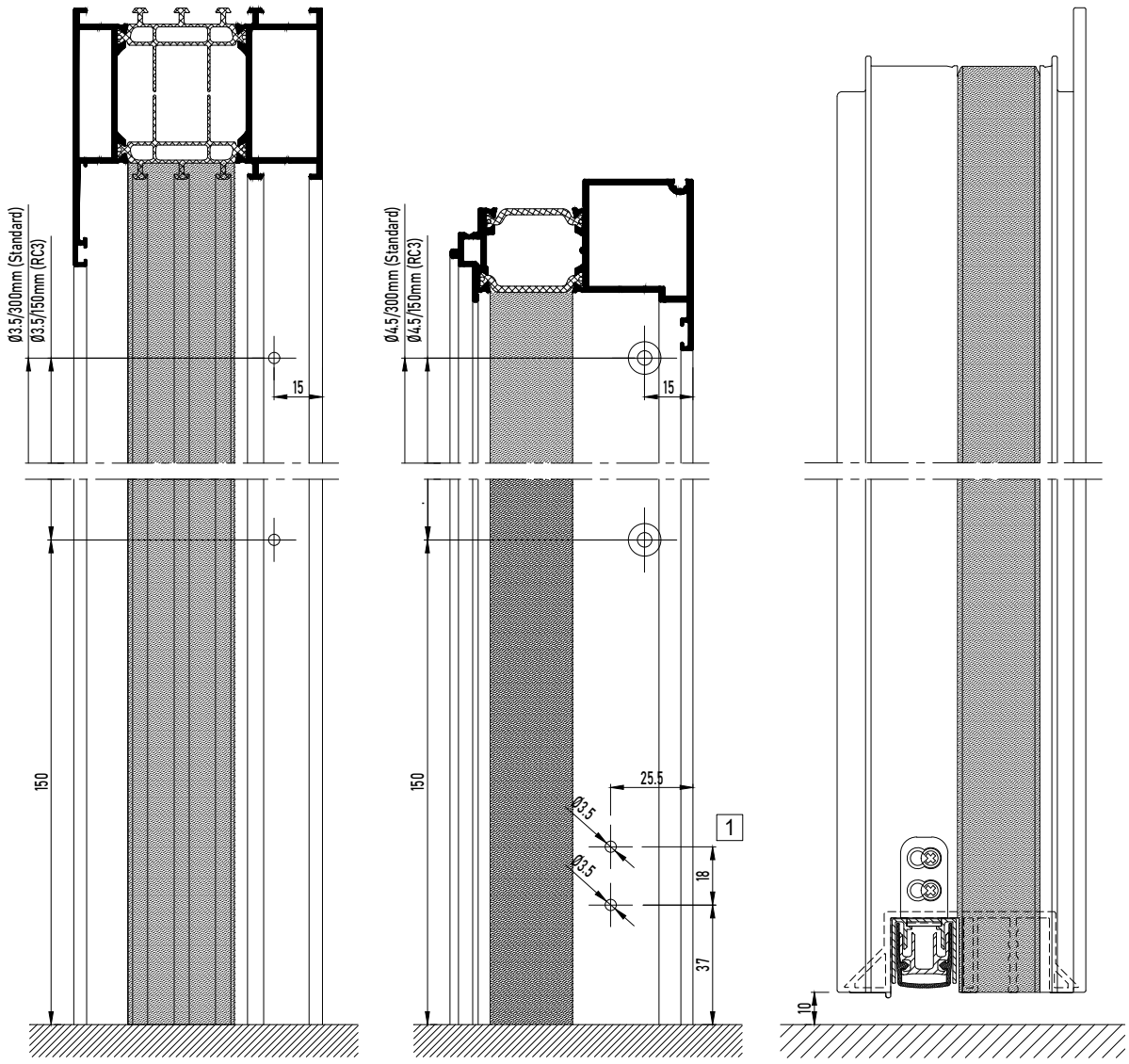

X DICHTINGSMIDDEL
MATIERE D'ETANCHEITE
SEALING AGENT
ABDICHTUNG

MONTAGEVOLGORDE
L'ORDRE DE MONTAGE
THE ORDER OF ASSEMBLY
MONTAGEREIHENFOLGE
1 2 3 .

COMBINED DOOR AUTOMATIC SEALING OUTWARD OPENING

COMBINED DOOR OUTWARD OPENING WITH AUTOMATIC DRAUGHT EXCLUDER - BOTTOM DOOR RAIL

MASTERLINE 8-Fu



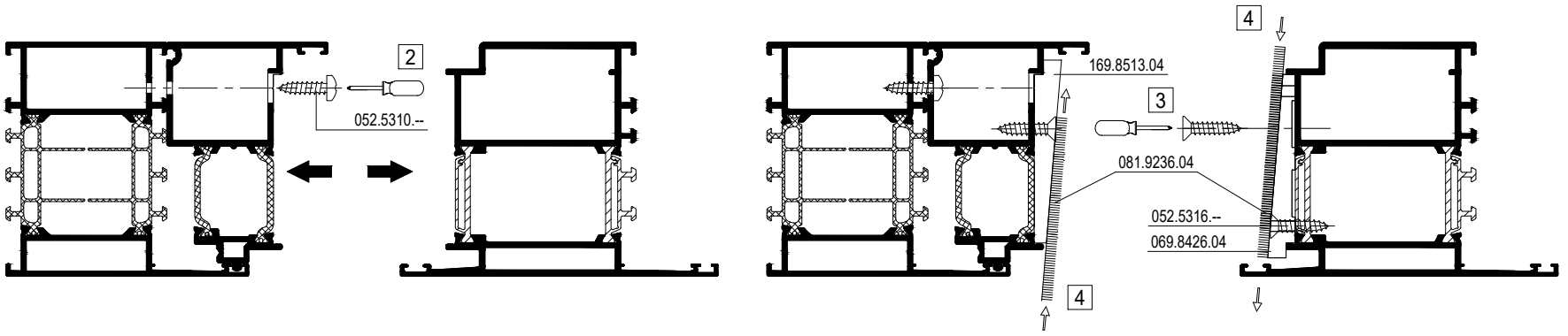

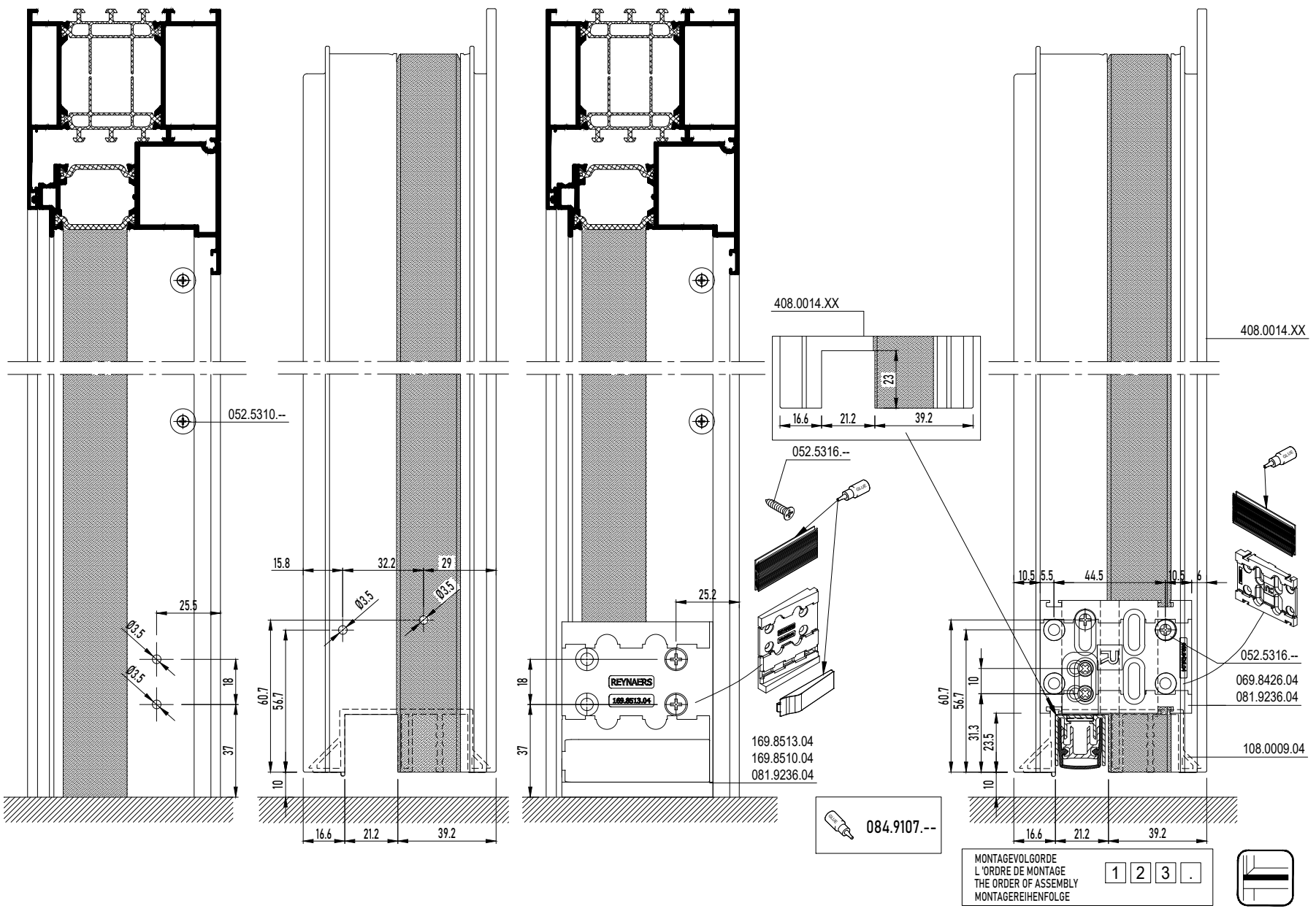

DOOR BRUSH OUTWARD OPENING

DOOR OUTWARD OPENING WITH BRUSH

MASTERLINE 8-Fu

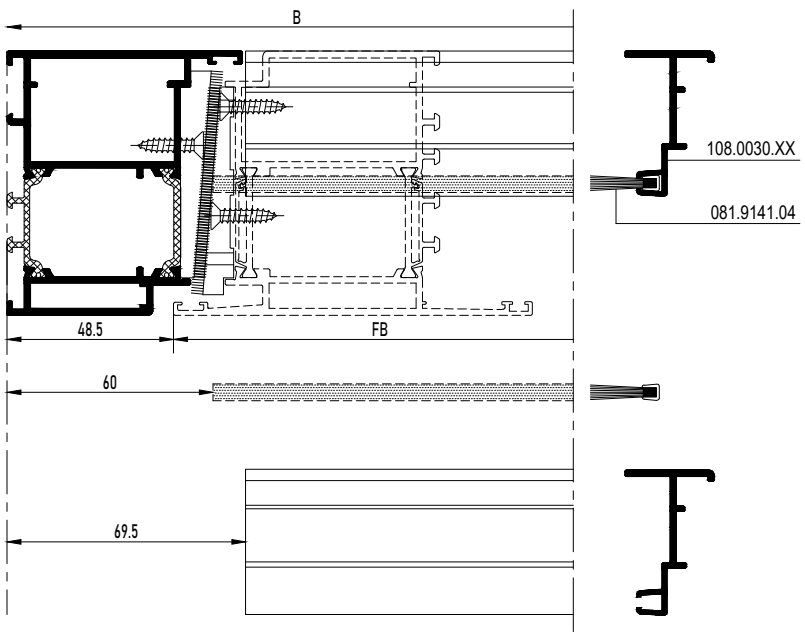

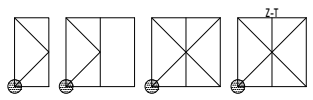

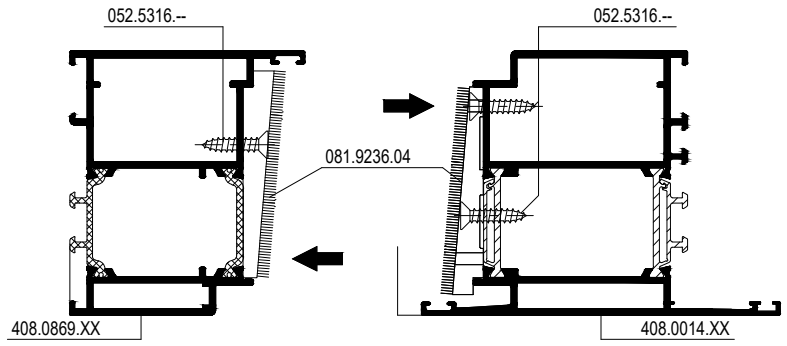



DOOR BRUSH OUTWARD OPENING

DOOR OUTWARD OPENING WITH BRUSH

MASTERLINE 8-Fu

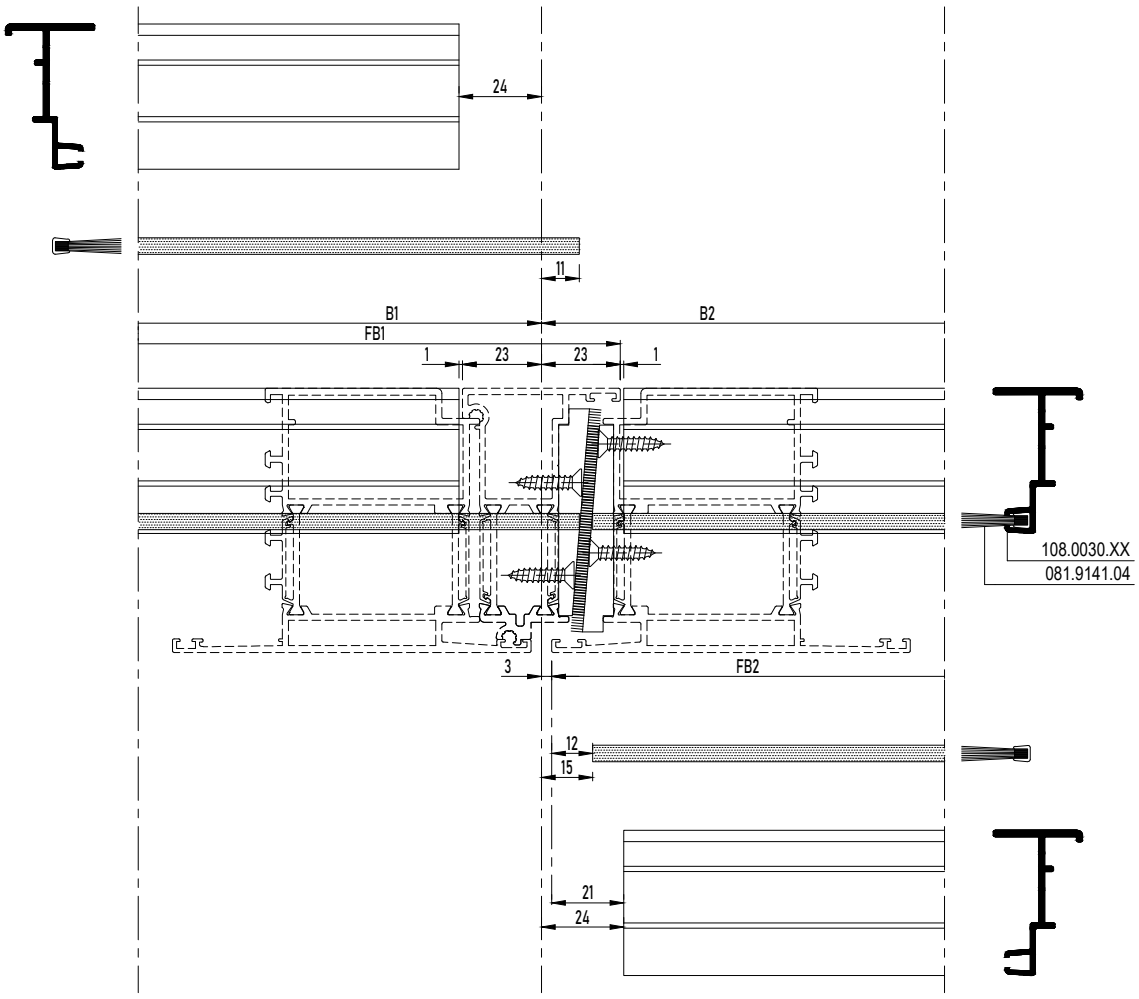

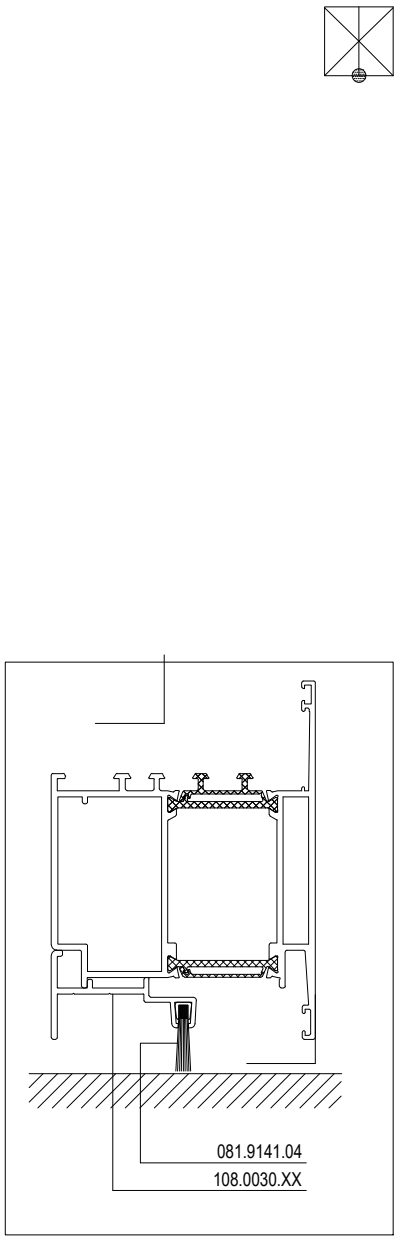

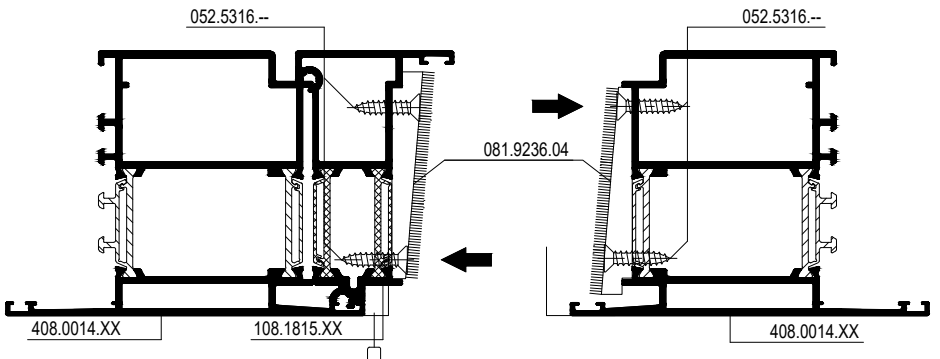

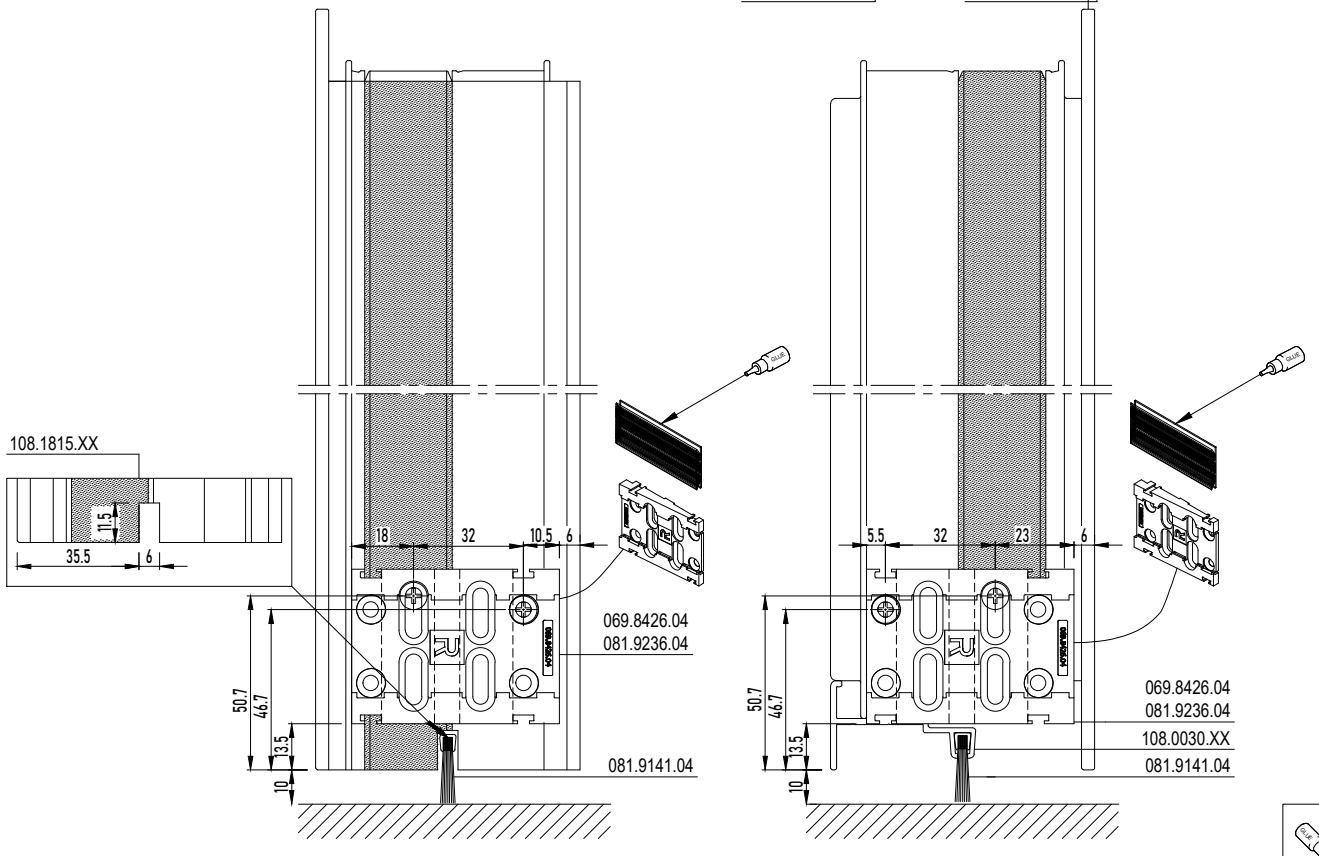

DOOR BRUSH OUTWARD OPENING

DOOR OUTWARD OPENING WITH BRUSH

MASTERLINE 8-Fu

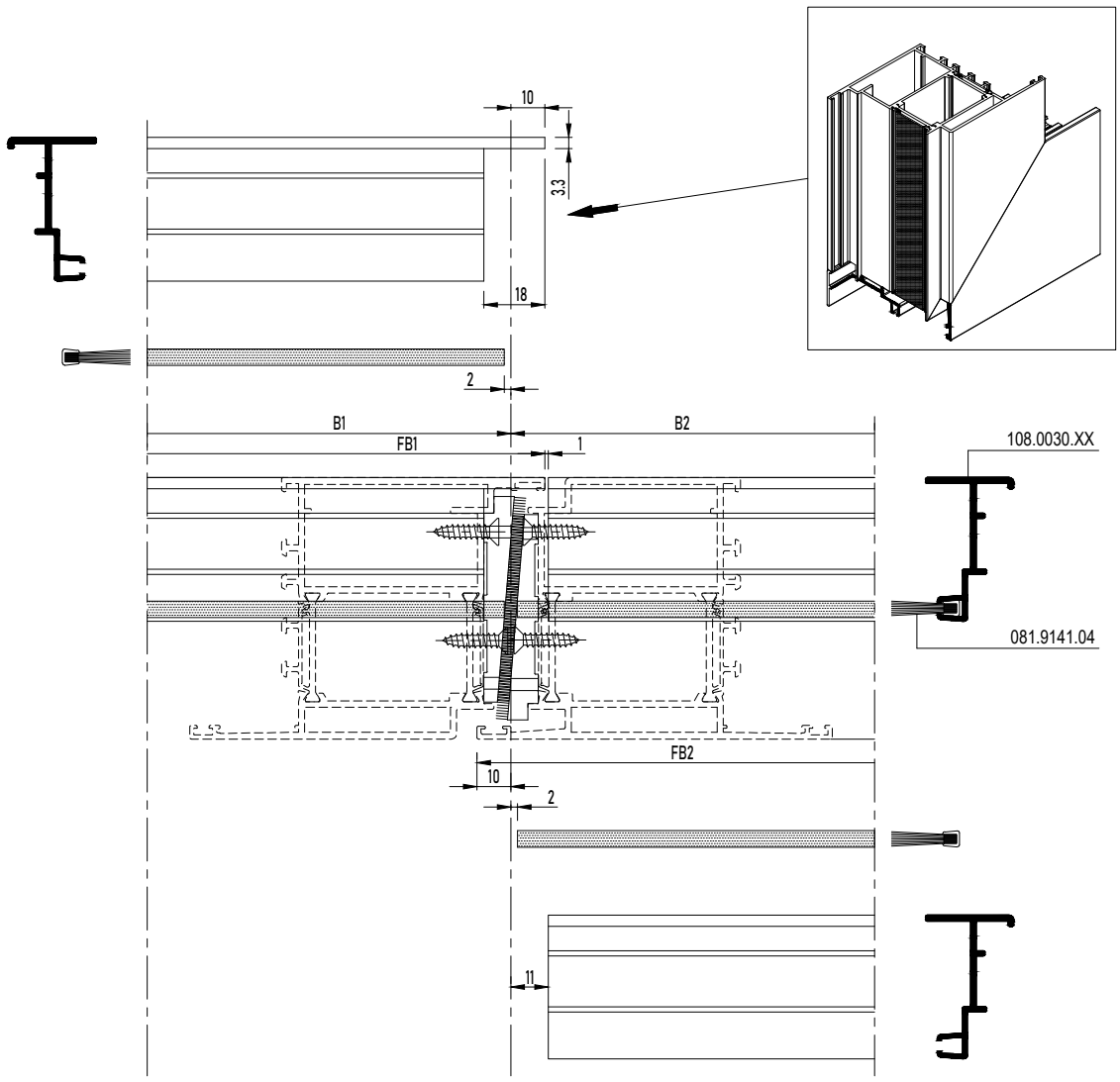

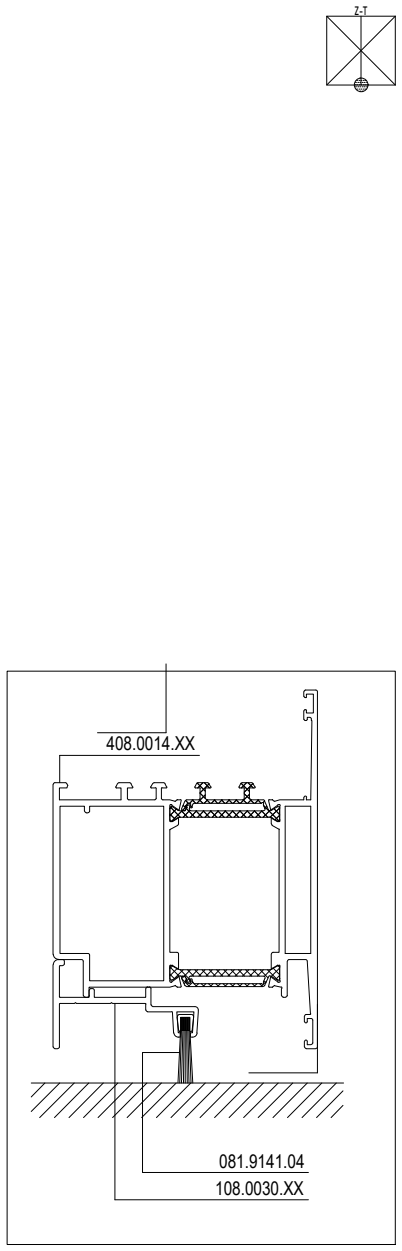

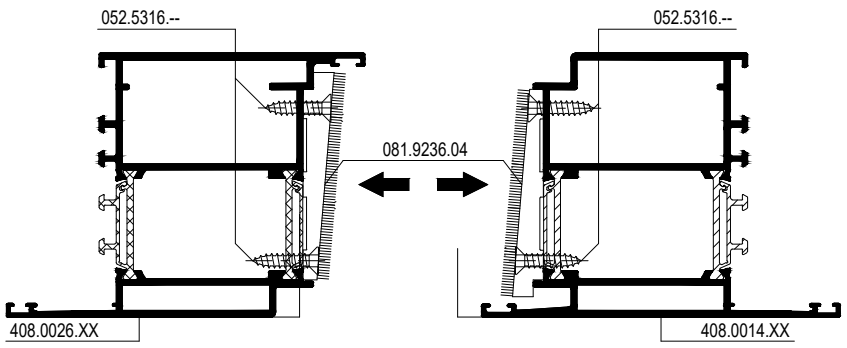

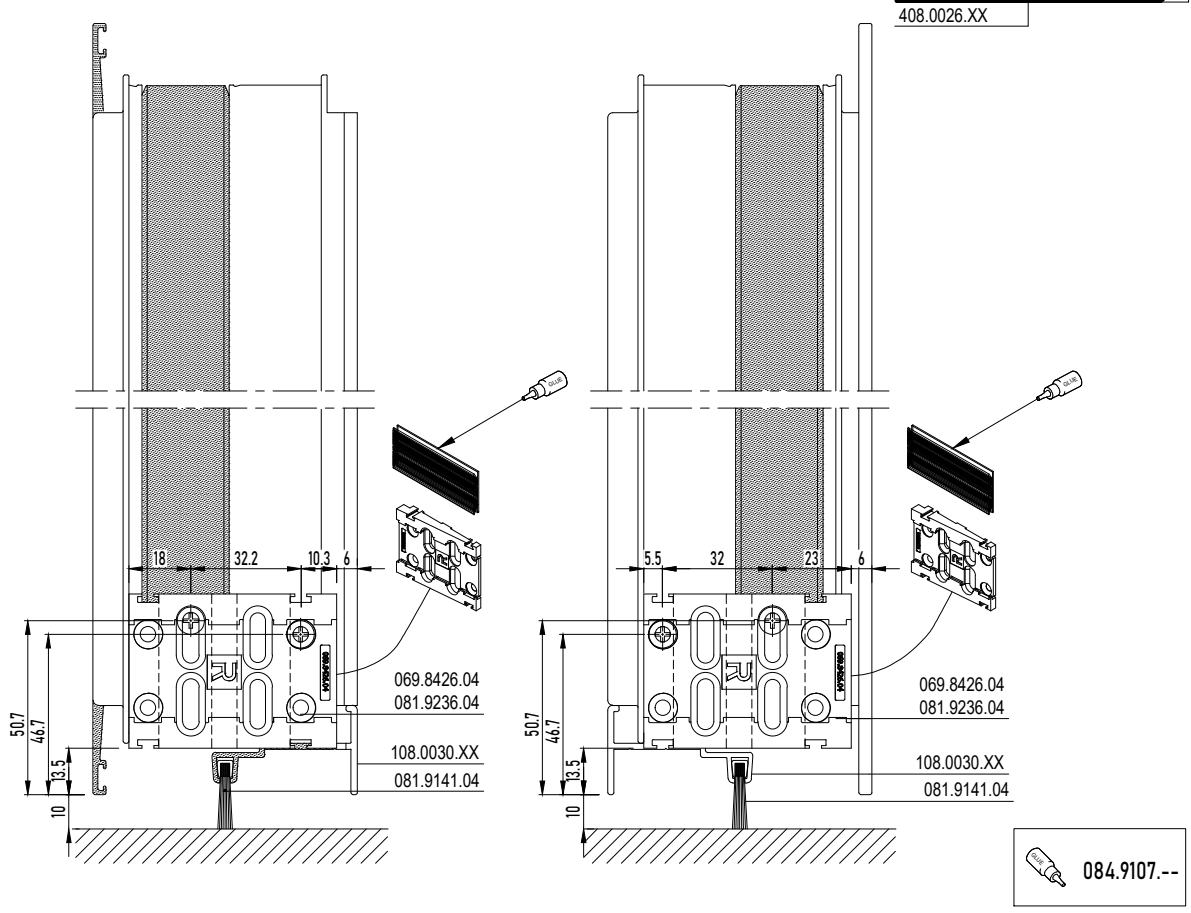

DOOR AUTOMATIC BRUSH OUTWARD OPENING

DOOR OUTWARD OPENING WITH BRUSH - BOTTOM DOOR RAIL

MASTERLINE 8-Fu

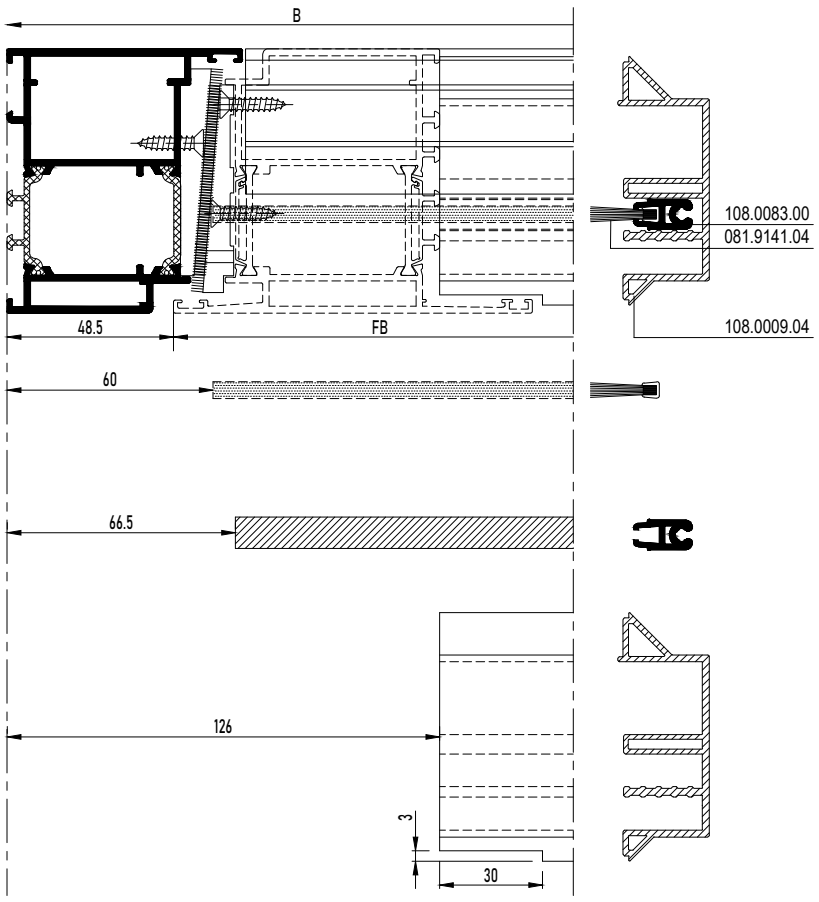

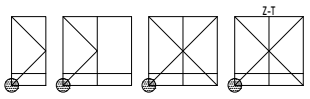

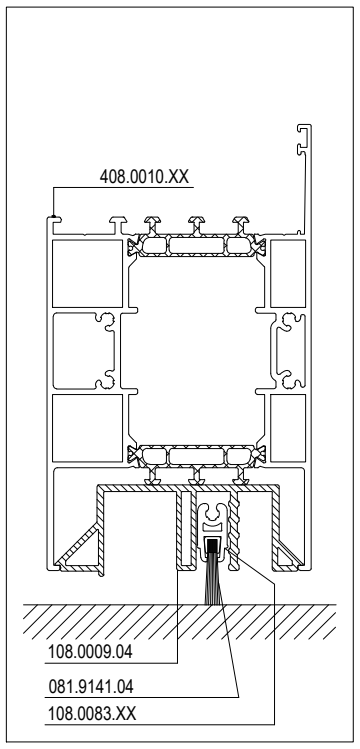

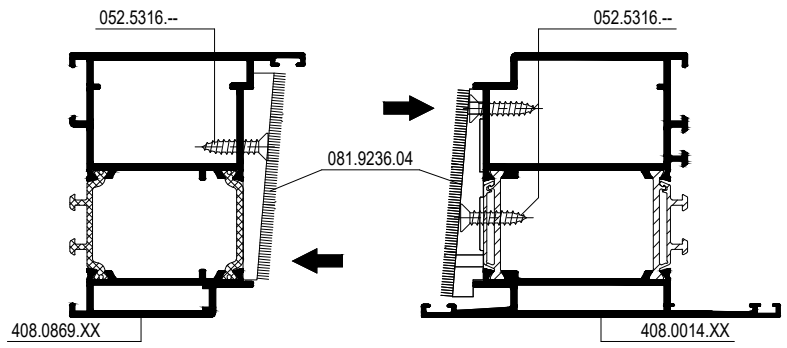

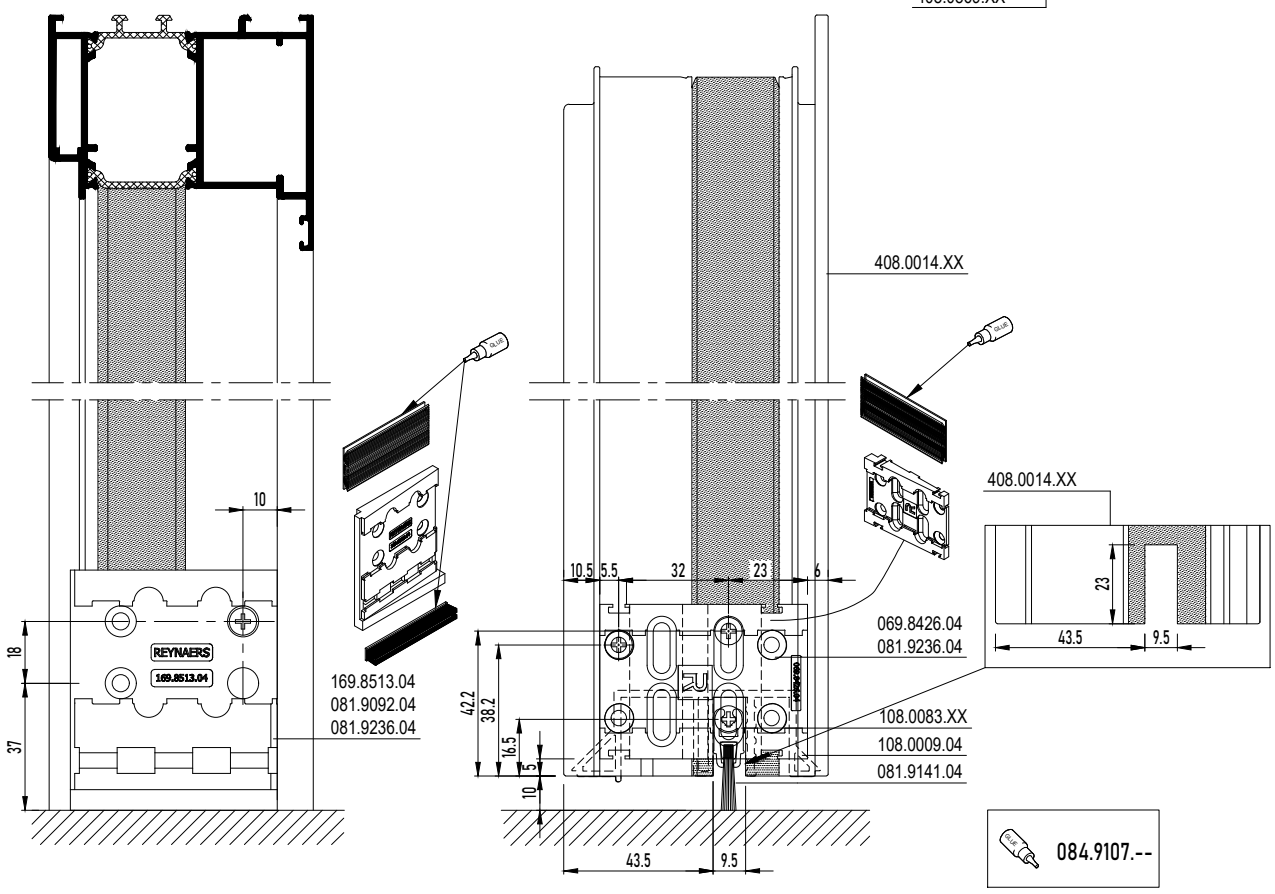

DOOR AUTOMATIC BRUSH OUTWARD OPENING

DOOR OUTWARD OPENING WITH BRUSH - BOTTOM DOOR RAIL

MASTERLINE 8-Fu

095.AKF6.00

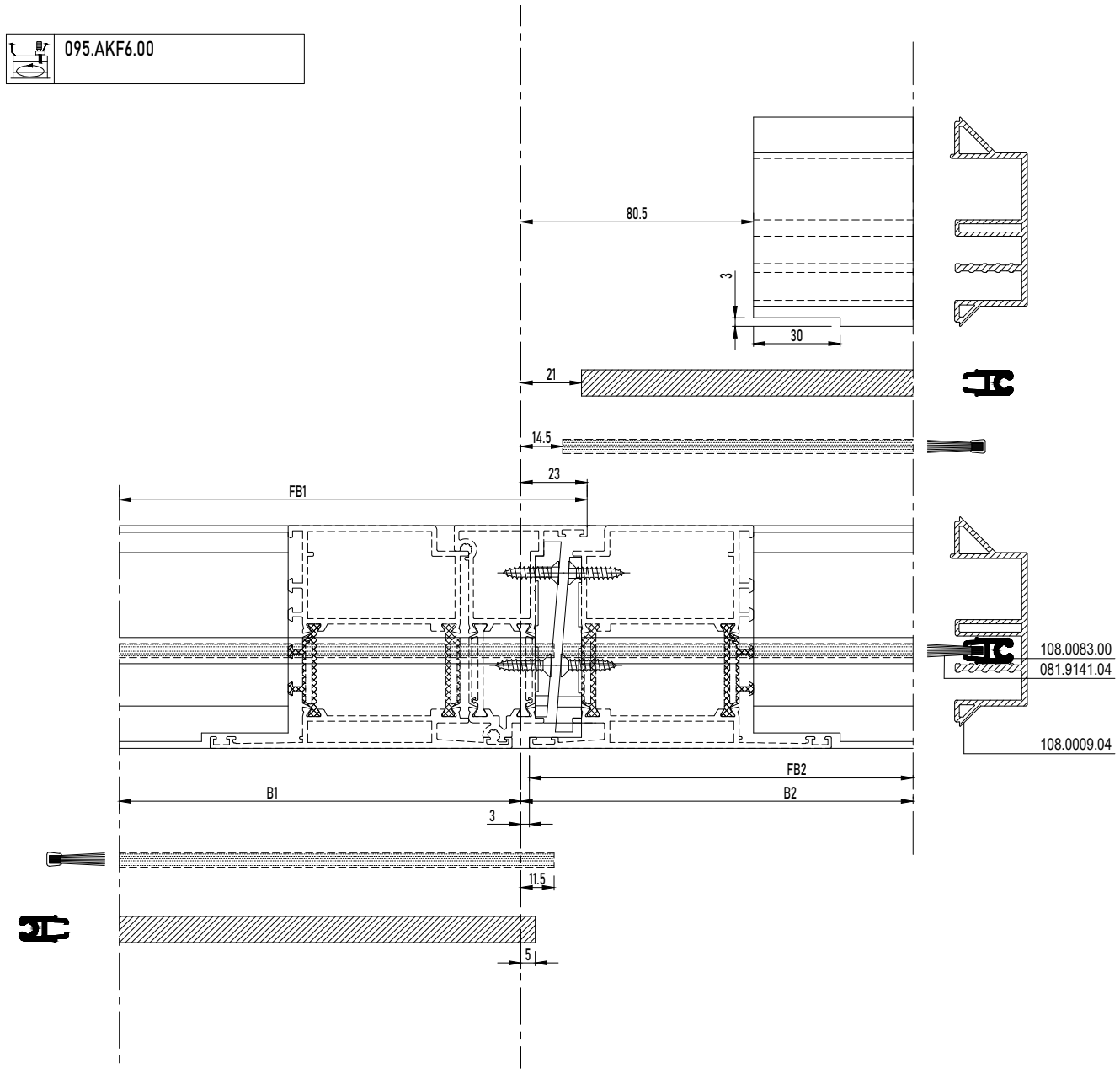

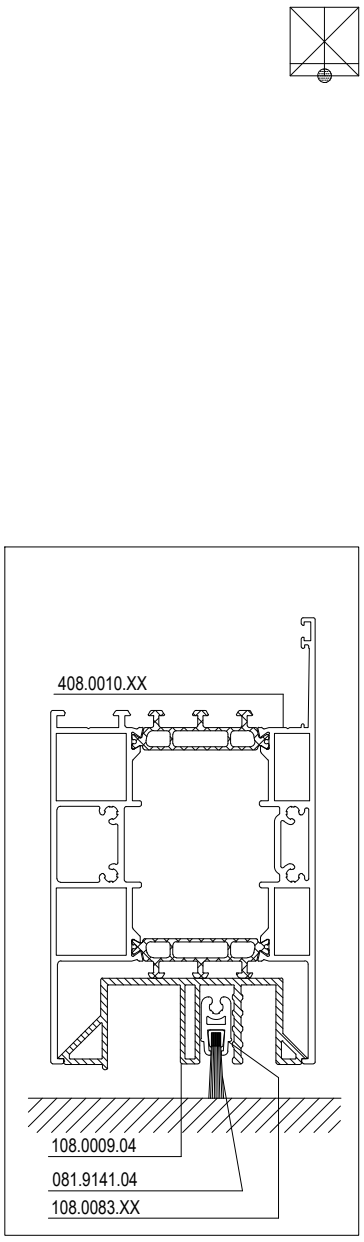

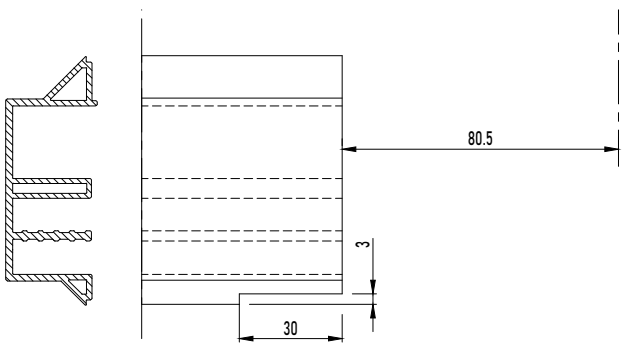

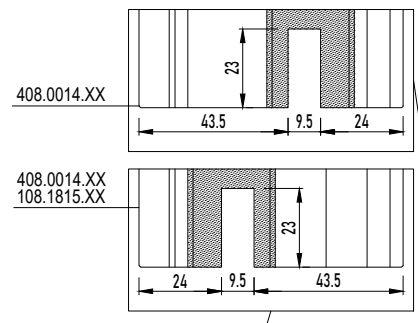

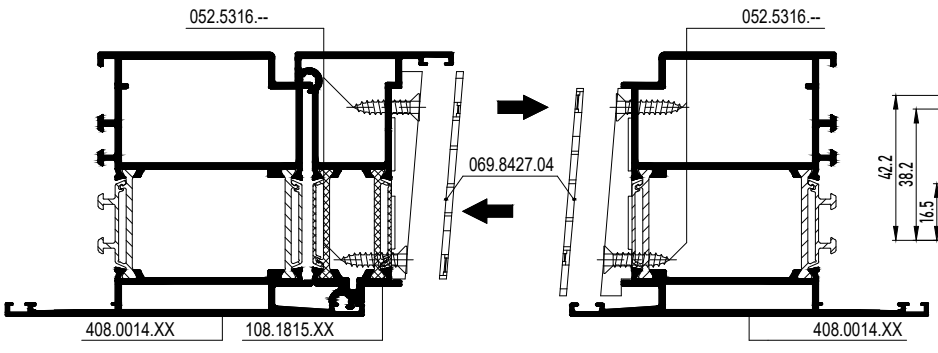

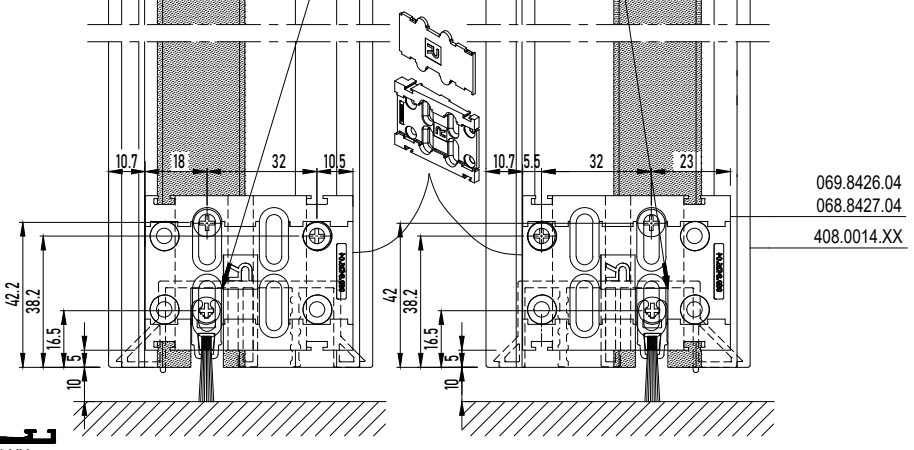

DOOR AUTOMATIC BRUSH OUTWARD OPENING

DOOR OUTWARD OPENING WITH BRUSH - BOTTOM DOOR RAIL

MASTERLINE 8-Fu

095.AKF6.00

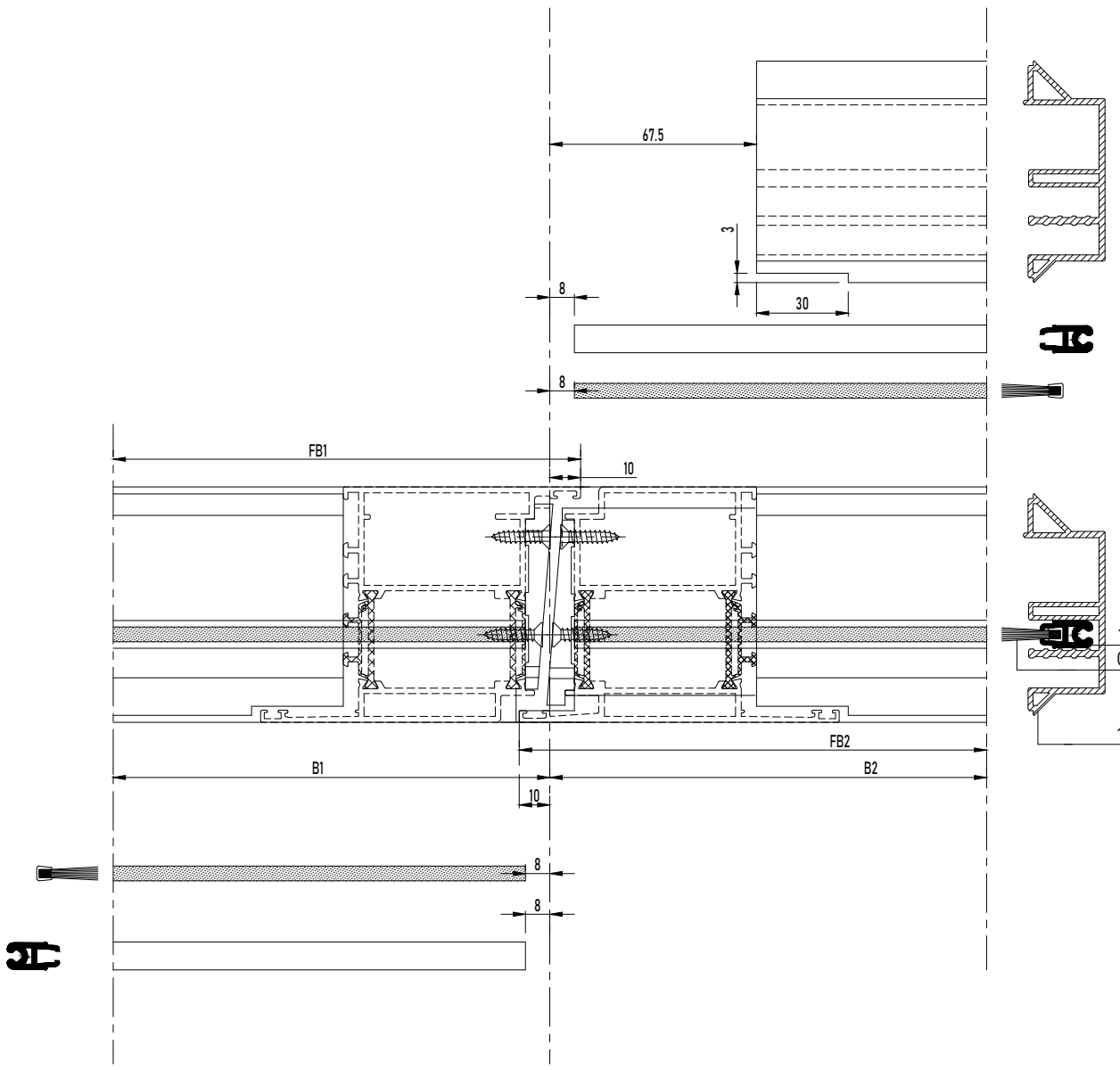

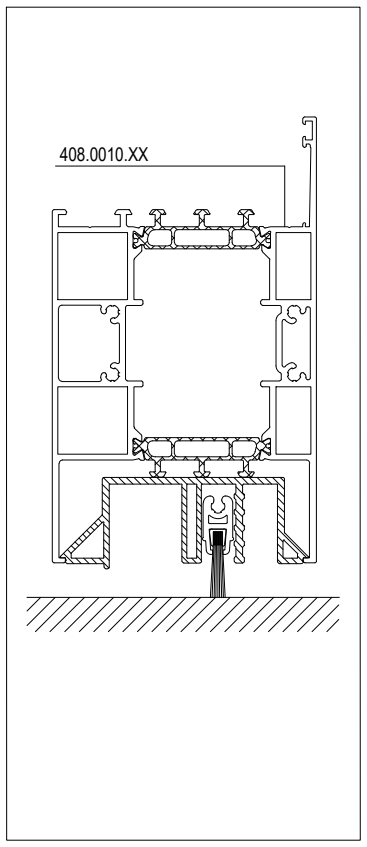

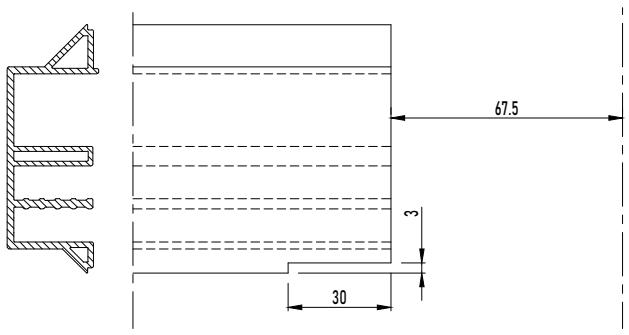

408.0026.XX

408.0014.XX

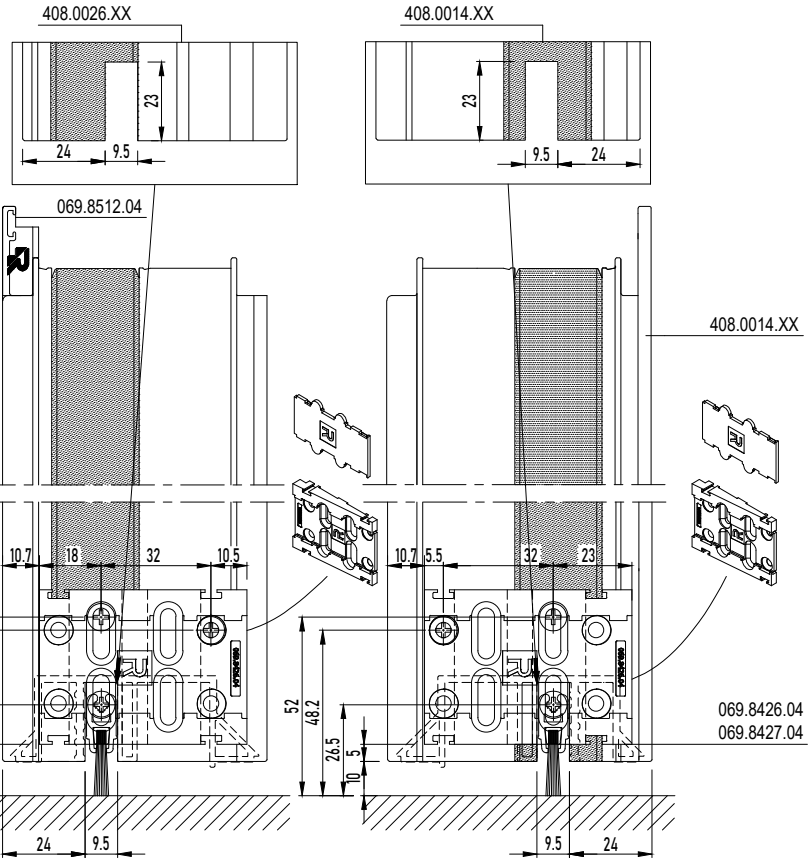

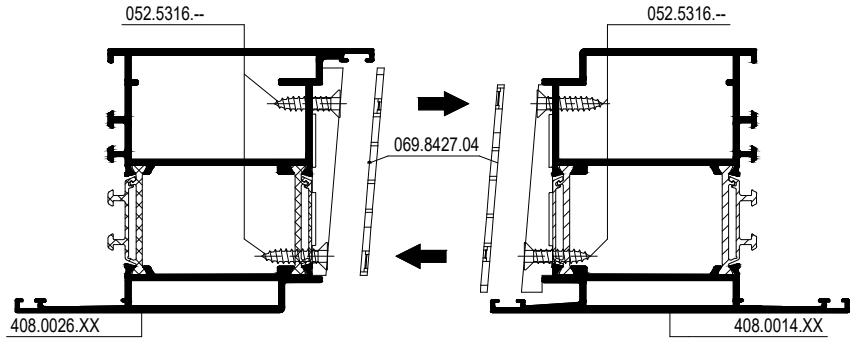

COMBINED DOOR BRUSH OUTWARD OPENING

COMBINED DOOR OUTWARD OPENING WITH BRUSH

MASTERLINE 8-Fu

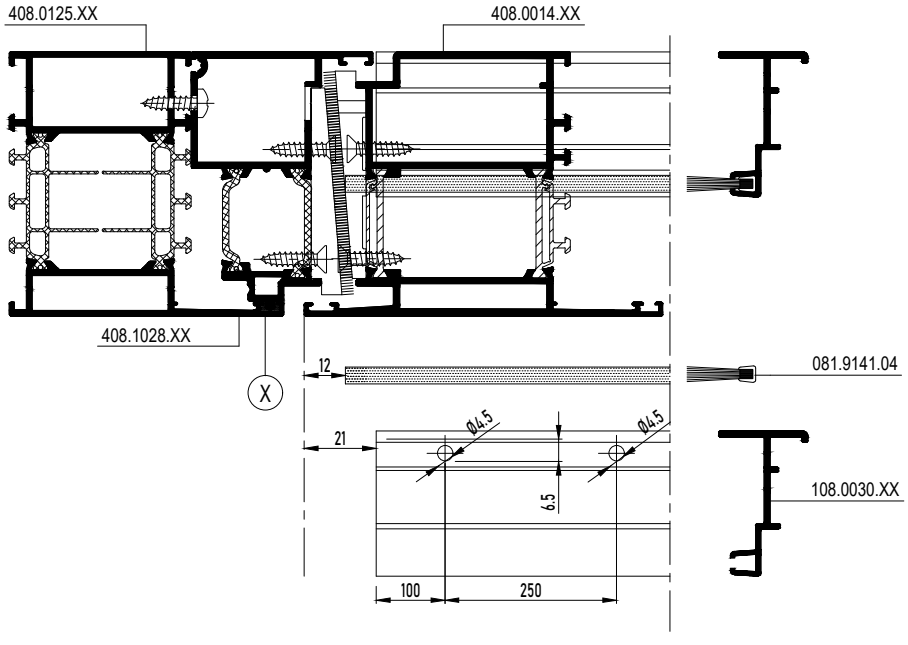



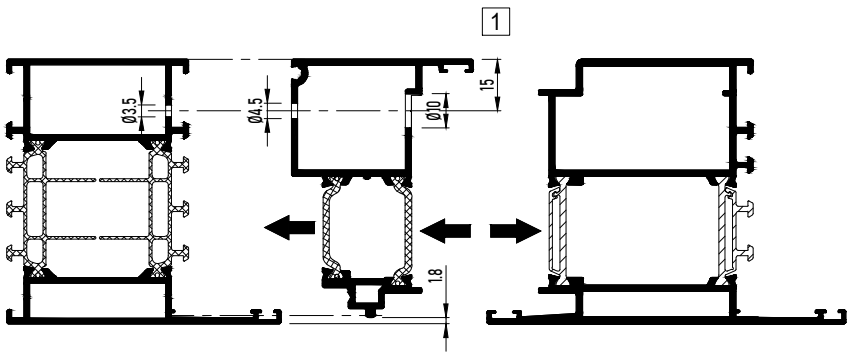

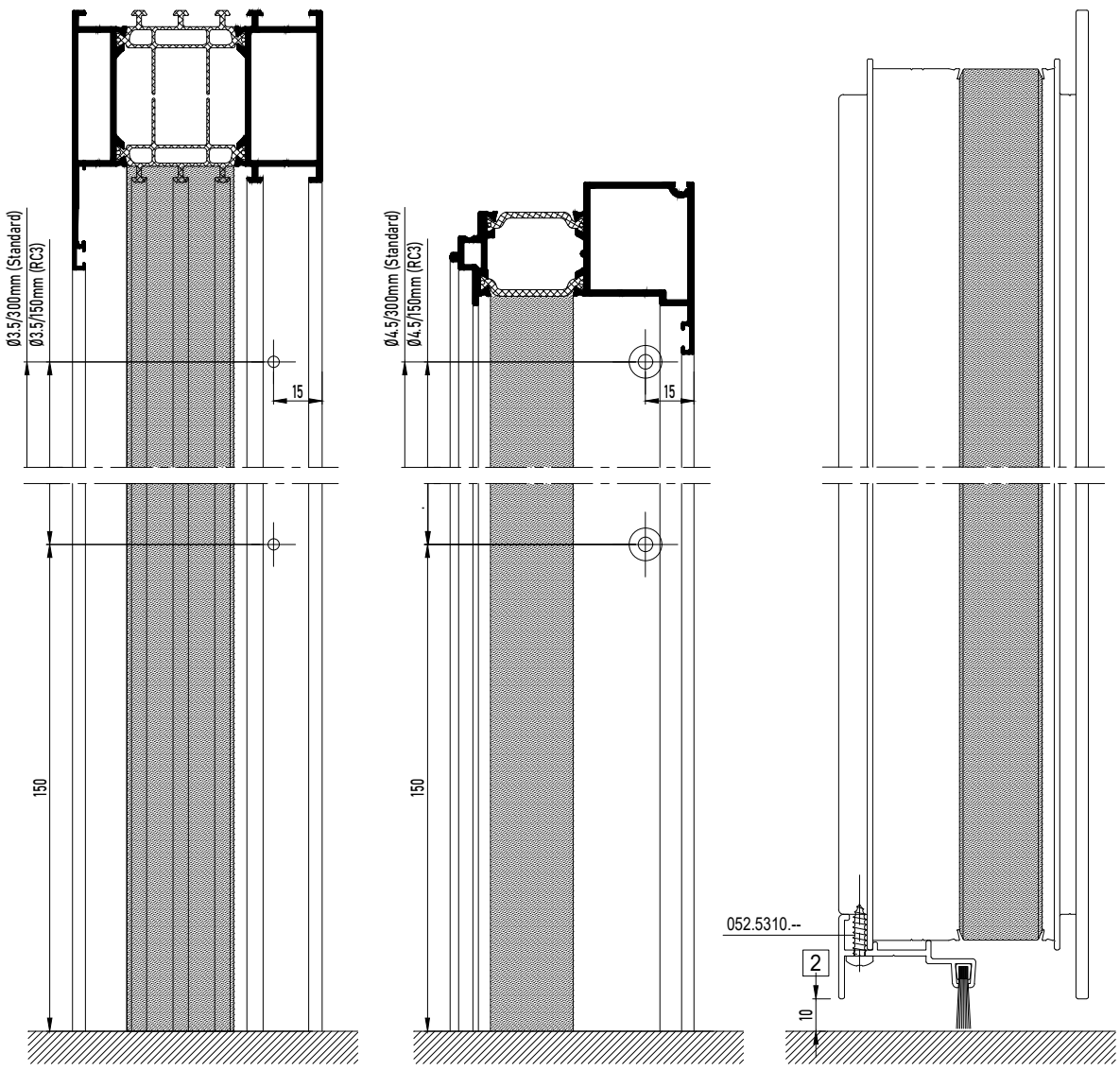

X DICHTINGSMIDDEL
MATIERE D'ETANCHEITE
SEALING AGENT
ABDICHTUNG

MONTAGEVOLGORDE
L 'ORDRE DE MONTAGE
THE ORDER OF ASSEMBLY
MONTAGEREIHENFOLGE
1 2 3 .



COMBINED DOOR BRUSH OUTWARD OPENING

COMBINED DOOR OUTWARD OPENING WITH BRUSH

MASTERLINE 8-Fu



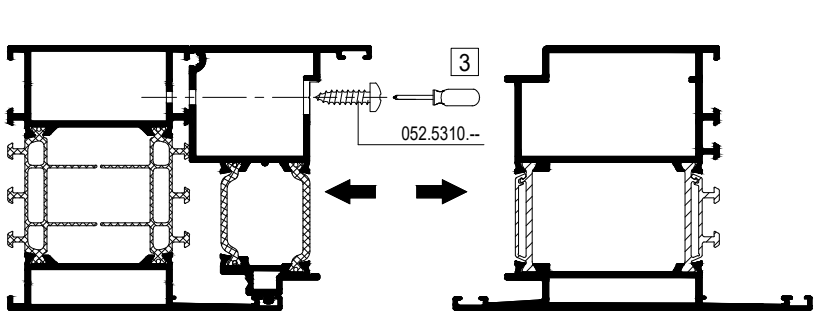

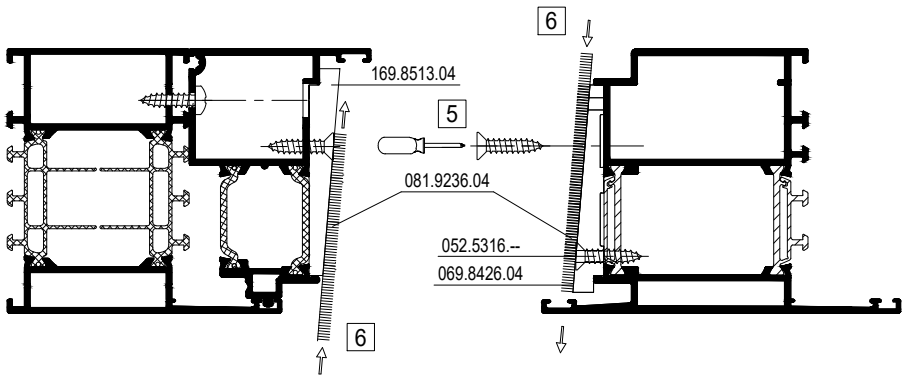

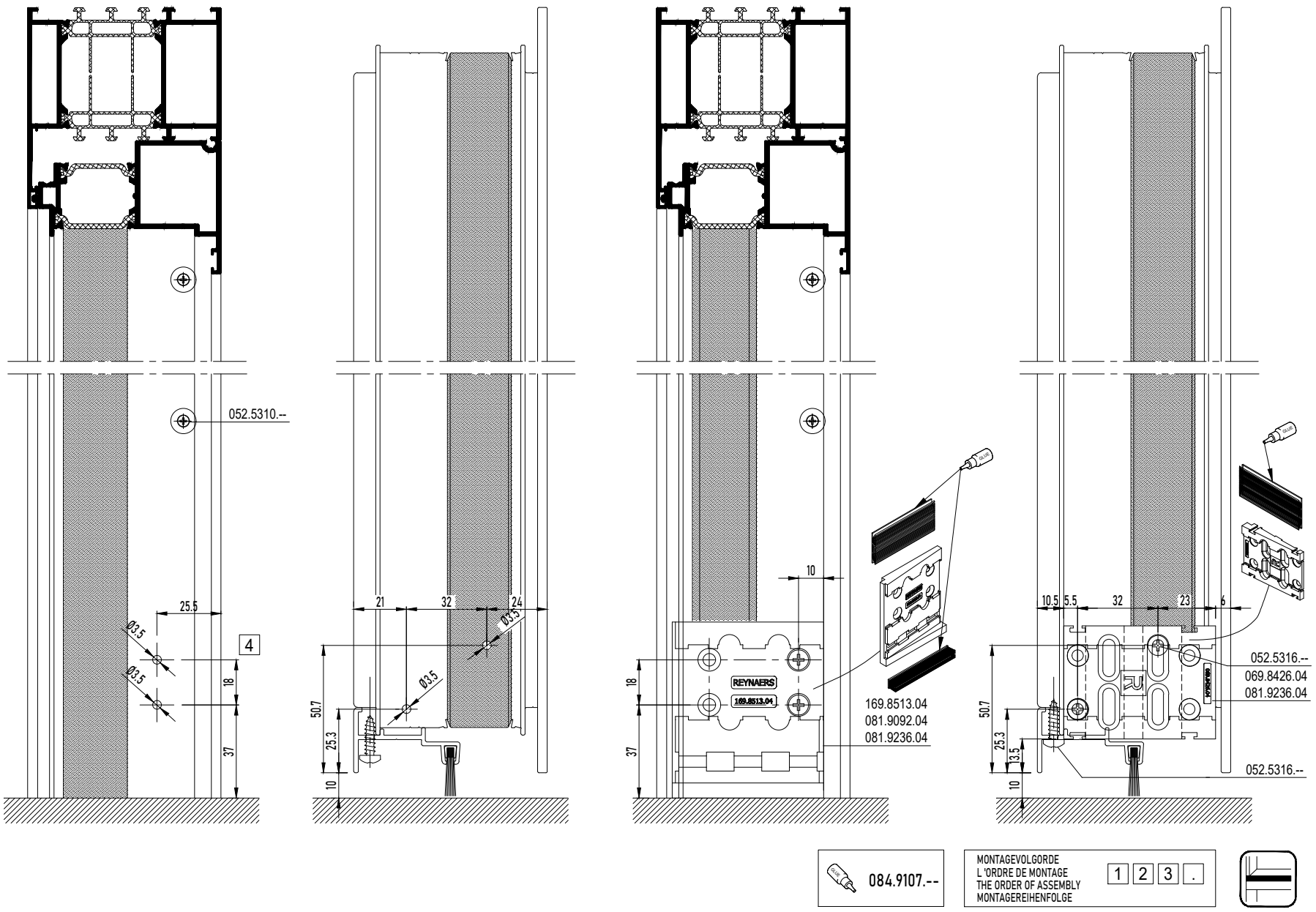

COMBINED DOOR BRUSH OUTWARD OPENING

COMBINED DOOR OUTWARD OPENING WITH BRUSH - BOTTOM DOOR RAIL

MASTERLINE 8-Fu

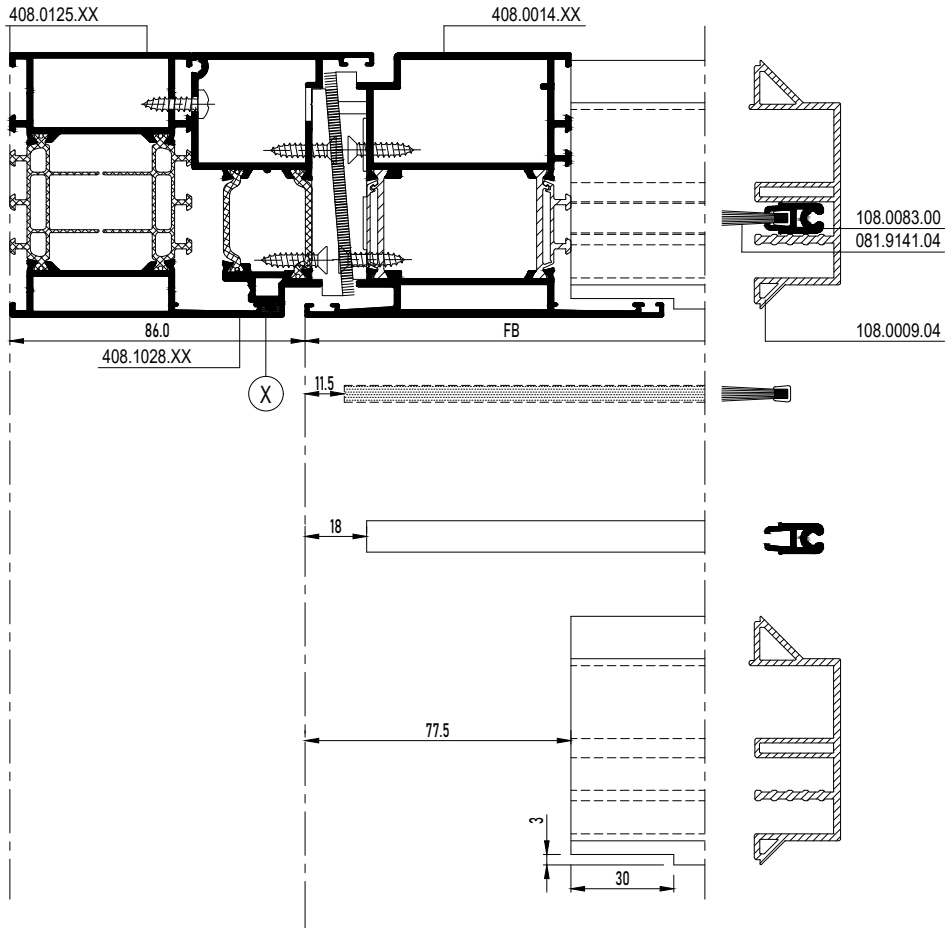



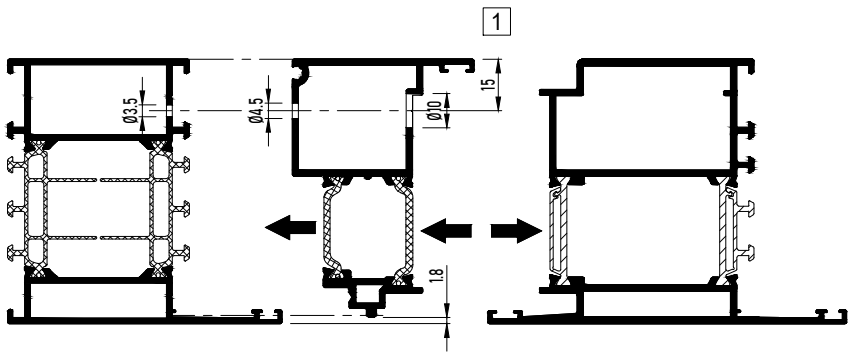

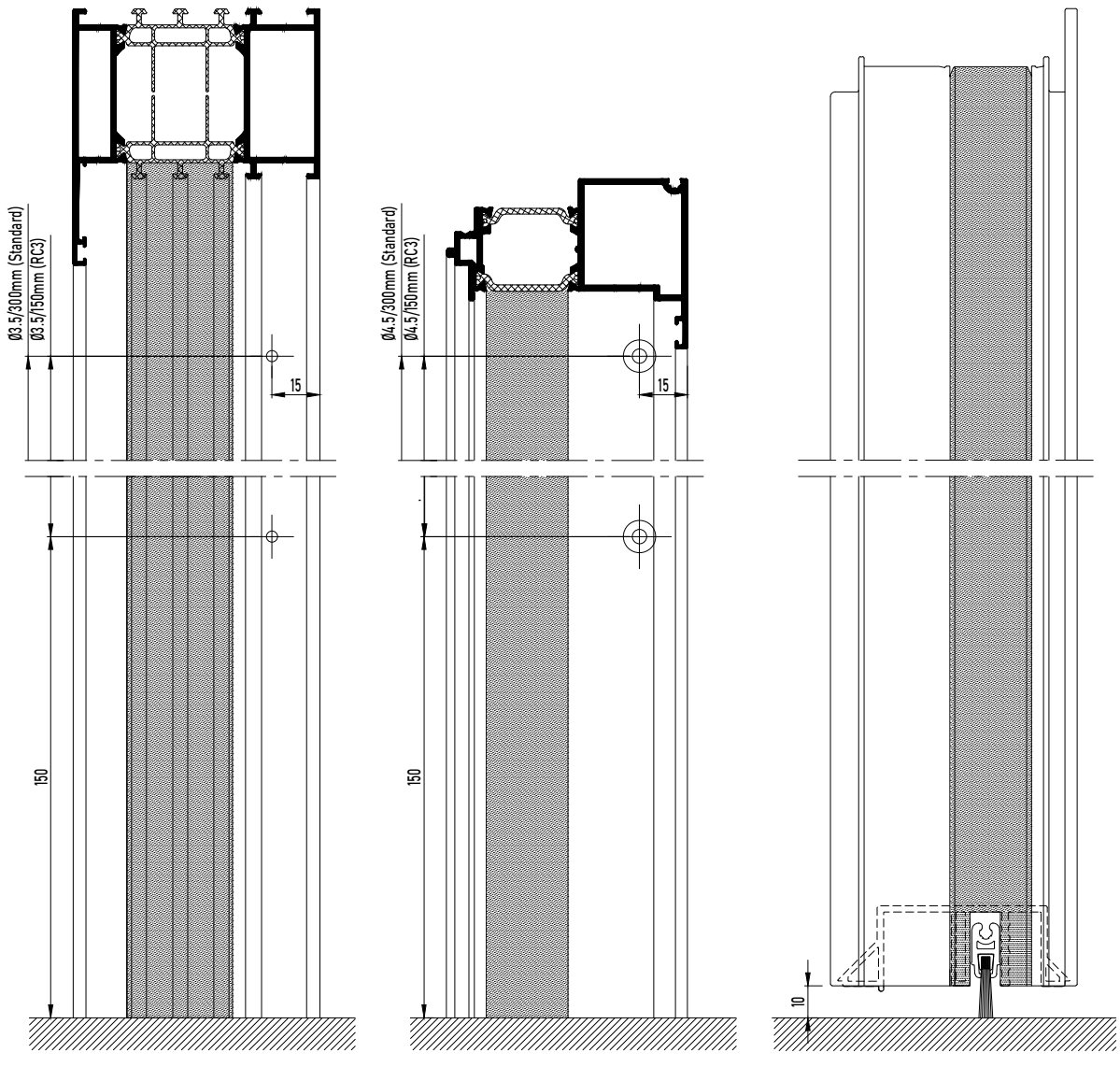

X DICHTINGSMIDDEL
MATIERE D'ETANCHEITE
SEALING AGENT
ABDICHTUNG

MONTAGEVOLGORDE
L'ORDRE DE MONTAGE
THE ORDER OF ASSEMBLY
MONTAGEREIHENFOLGE
1 2 3 .



COMBINED DOOR BRUSH OUTWARD OPENING

COMBINED DOOR OUTWARD OPENING WITH BRUSH - BOTTOM DOOR RAIL

MASTERLINE 8-Fu



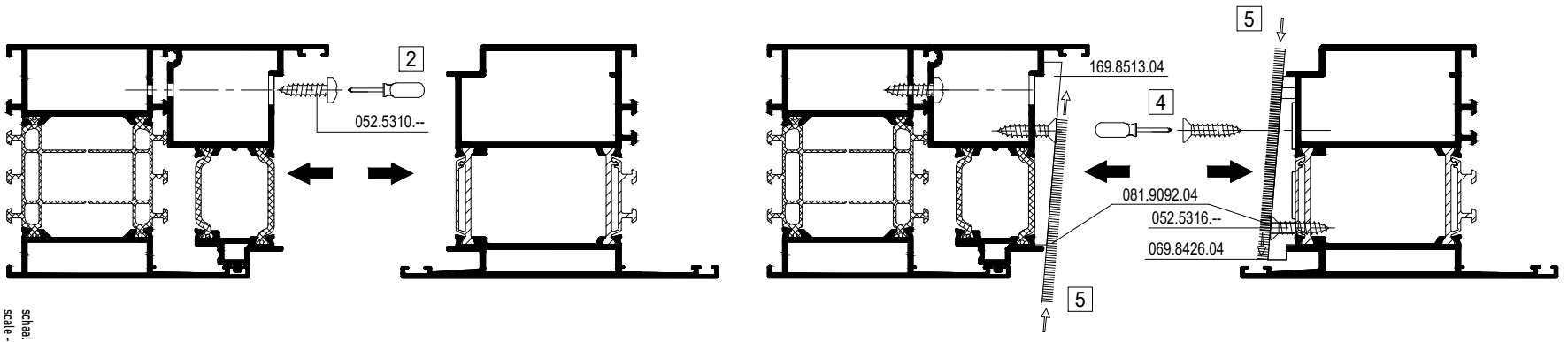

schaal - échelle
scale - Maßstab
1/2

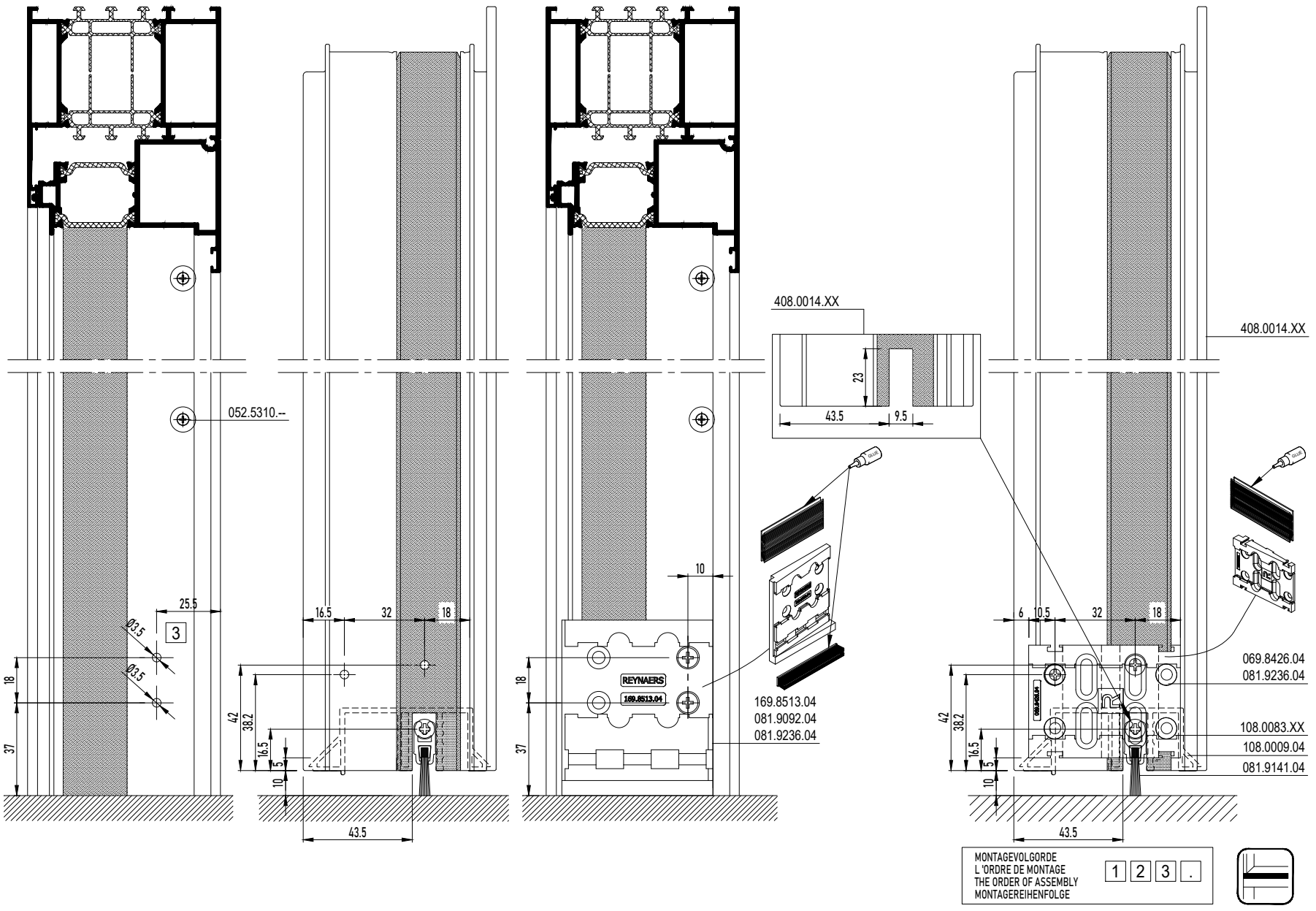

PANIC DOOR BRUSH OUTWARD OPENING

DOOR OUTW. OPENING WITH BRUSH - DOUBLE PANIC EN179/1125

MASTERLINE 8-Fu

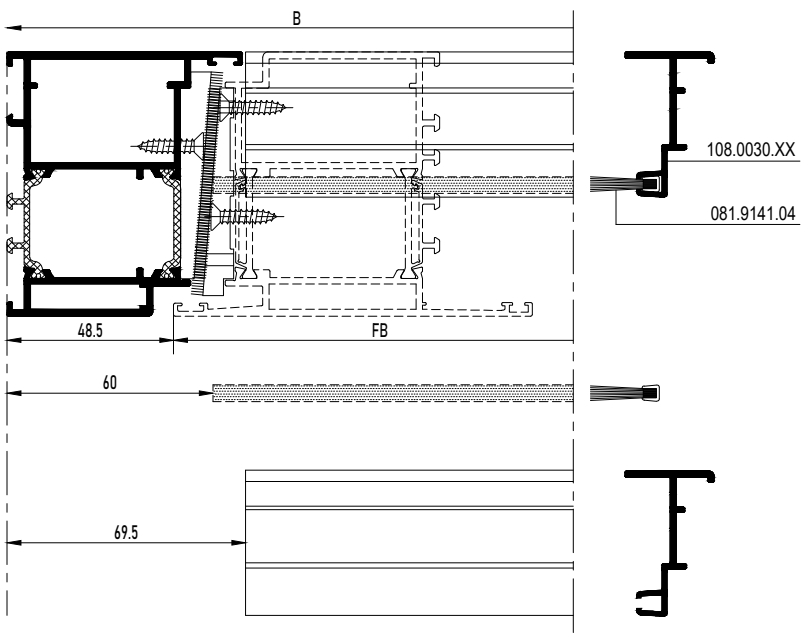



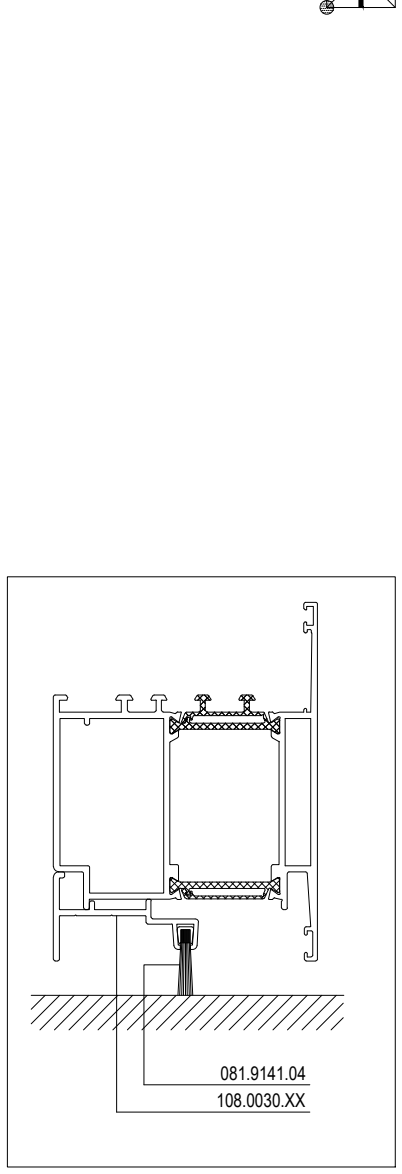

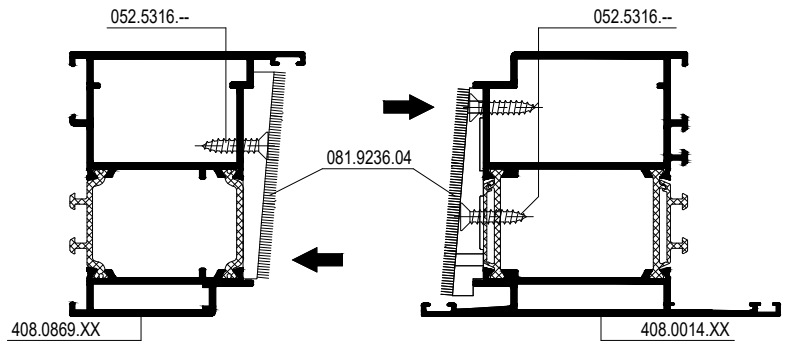

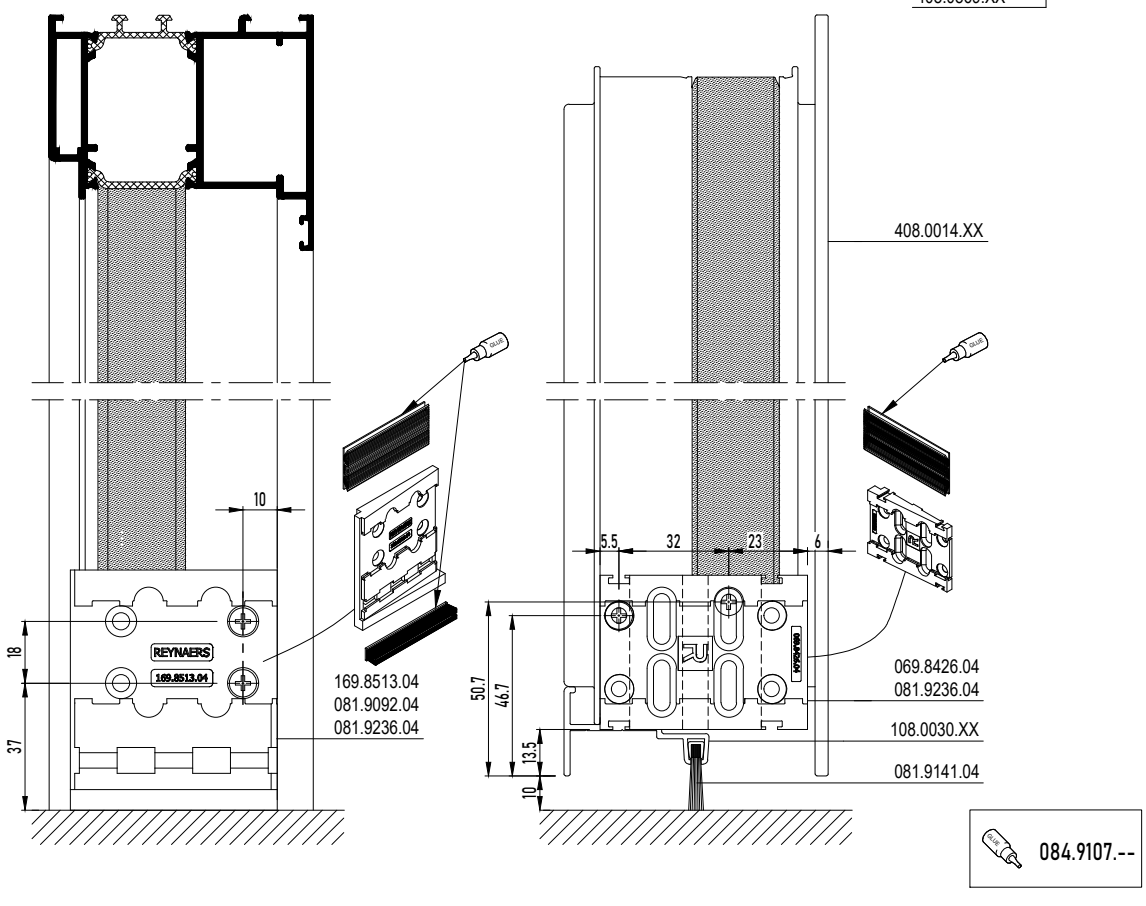



PANIC DOOR BRUSH OUTWARD OPENING

DOOR OUTW. OPENING WITH BRUSH - DOUBLE PANIC EN179/1125

MASTERLINE 8-Fu

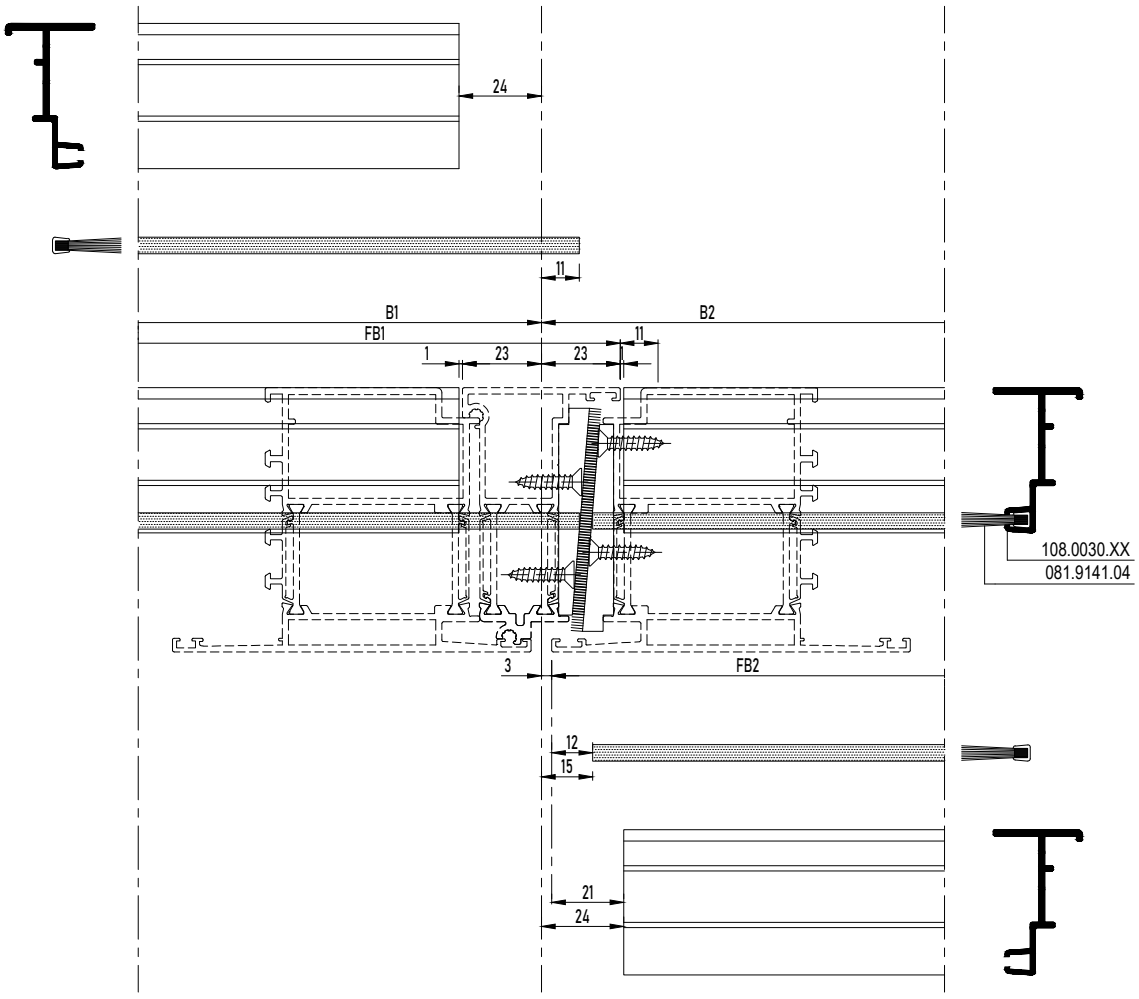

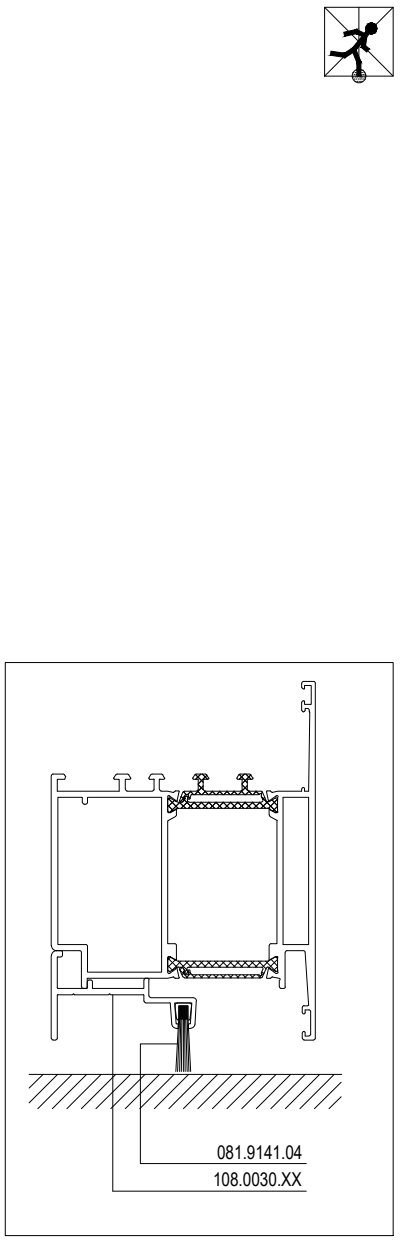

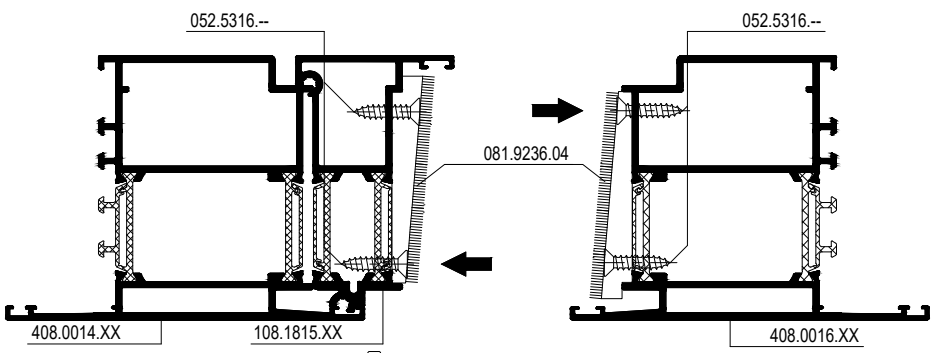

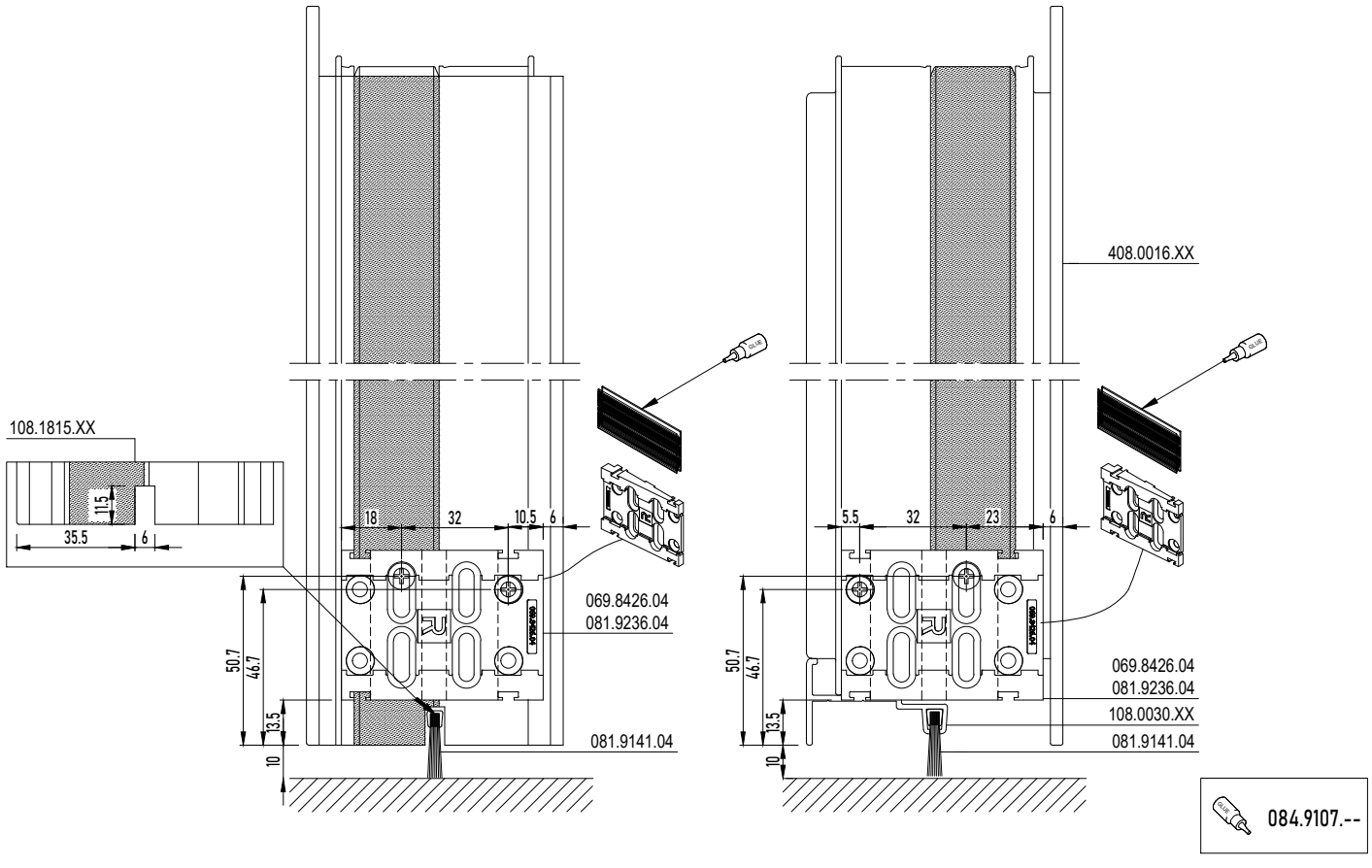

PANIC DOOR BRUSH OUTWARD OPENING

DOOR OUTW. OPENING WITH BRUSH - DOUBLE PANIC EN179/1125

MASTERLINE 8-Fu

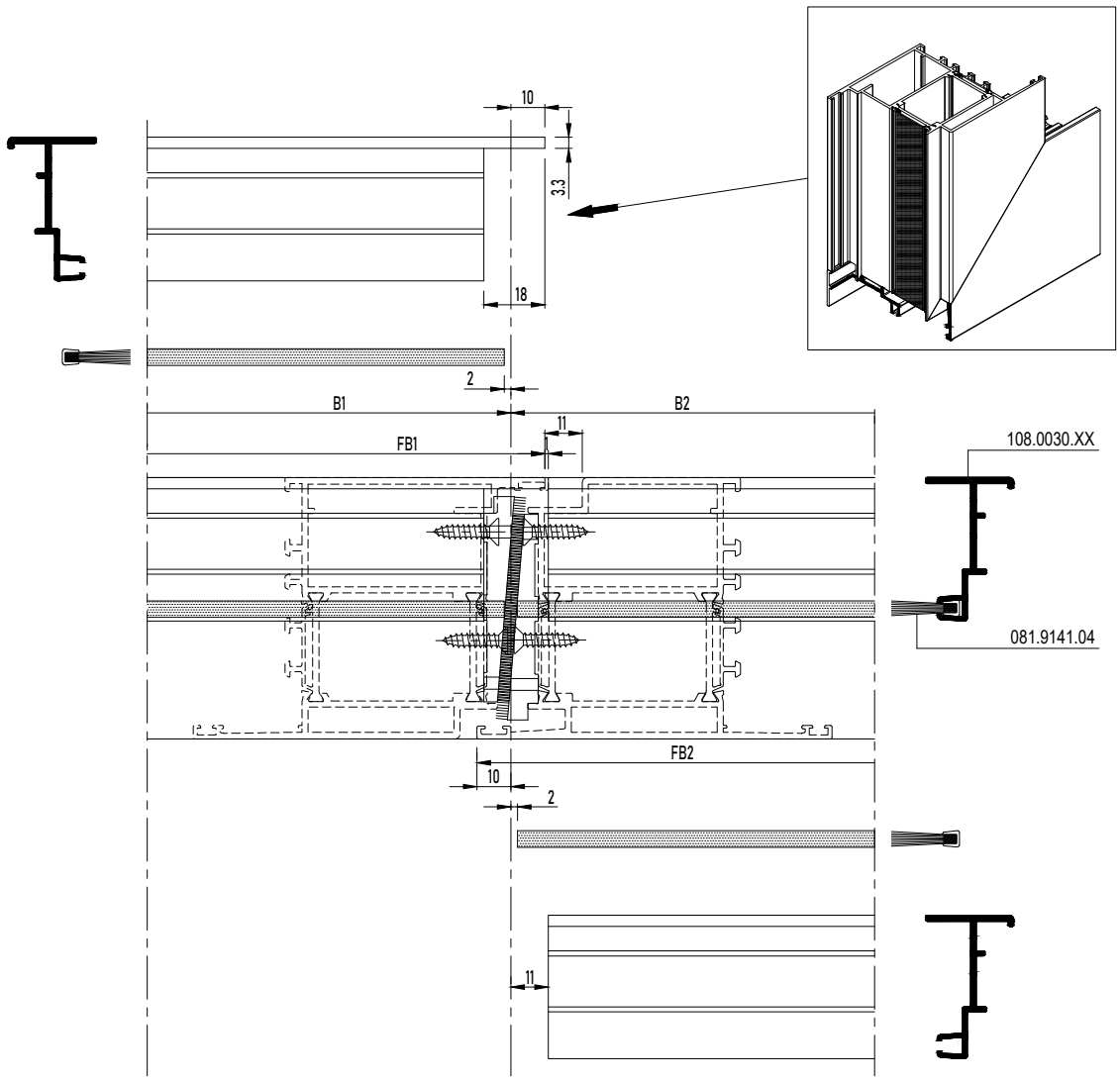



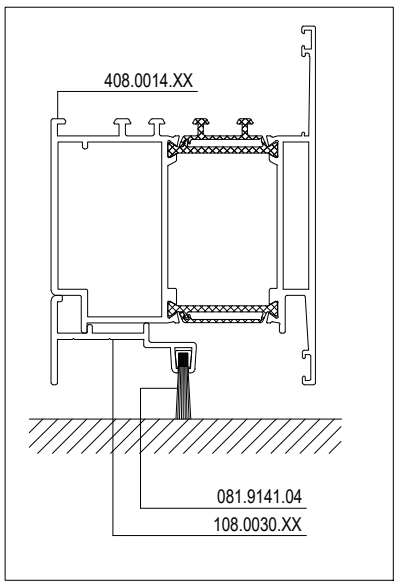

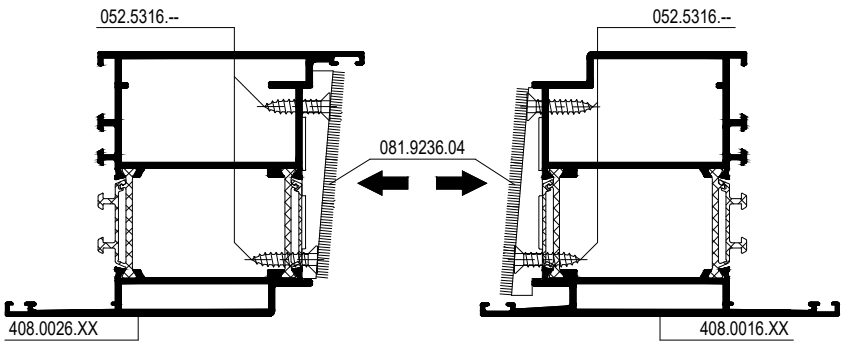

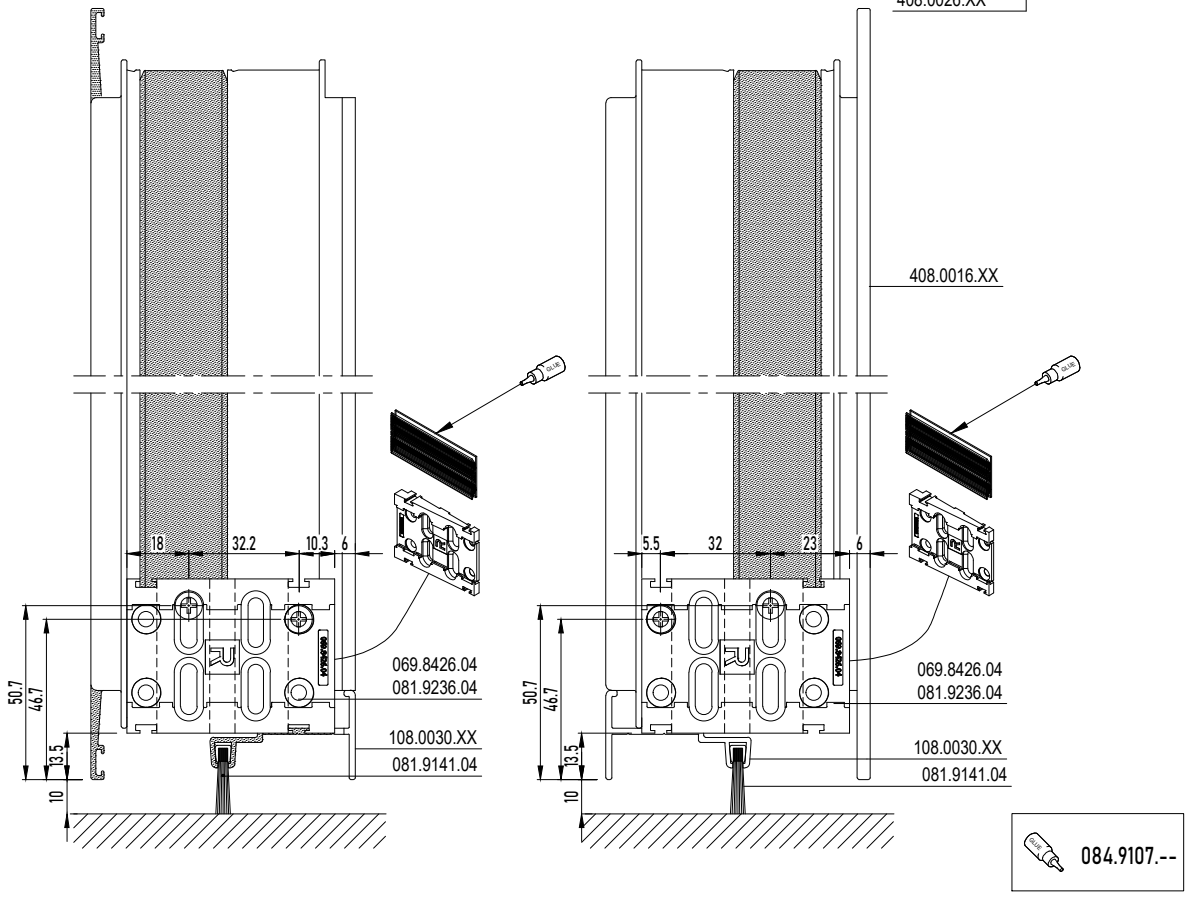

PANIC DOOR AUTOMATIC SEALING OUTWARD OPENING

DOOR OUTW. OPENING WITH AUTOMATIC DRAUGHT EXCLUDER - DOUBLE PANIC EN179/1125

MASTERLINE 8-Fu

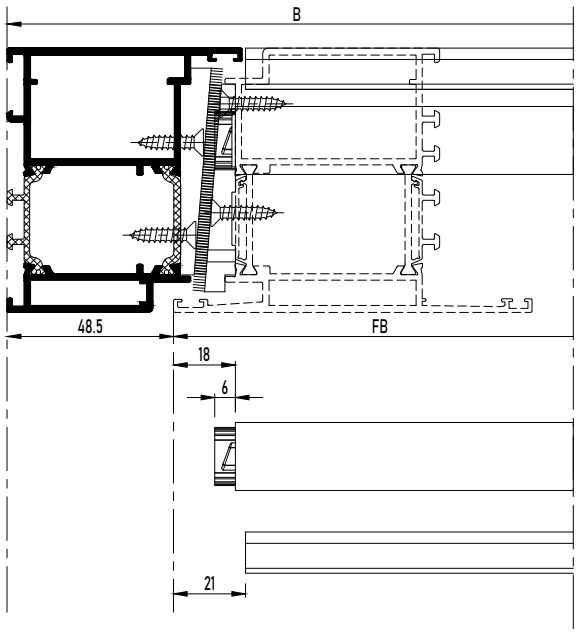

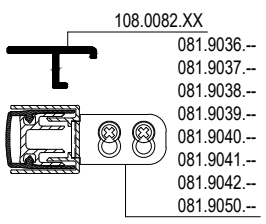

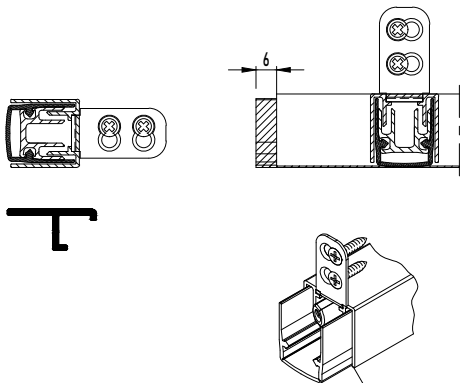



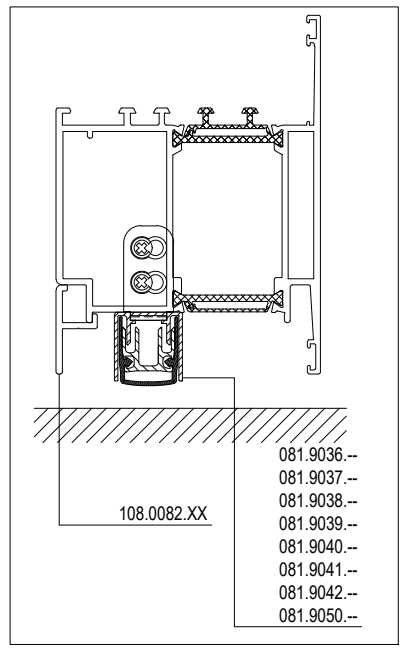

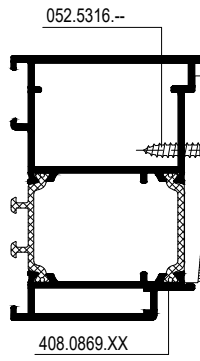

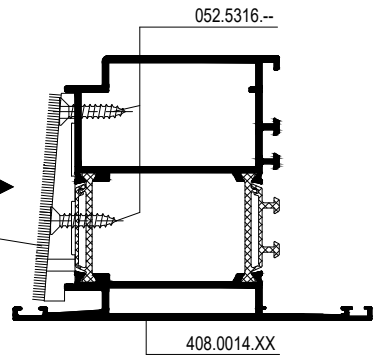

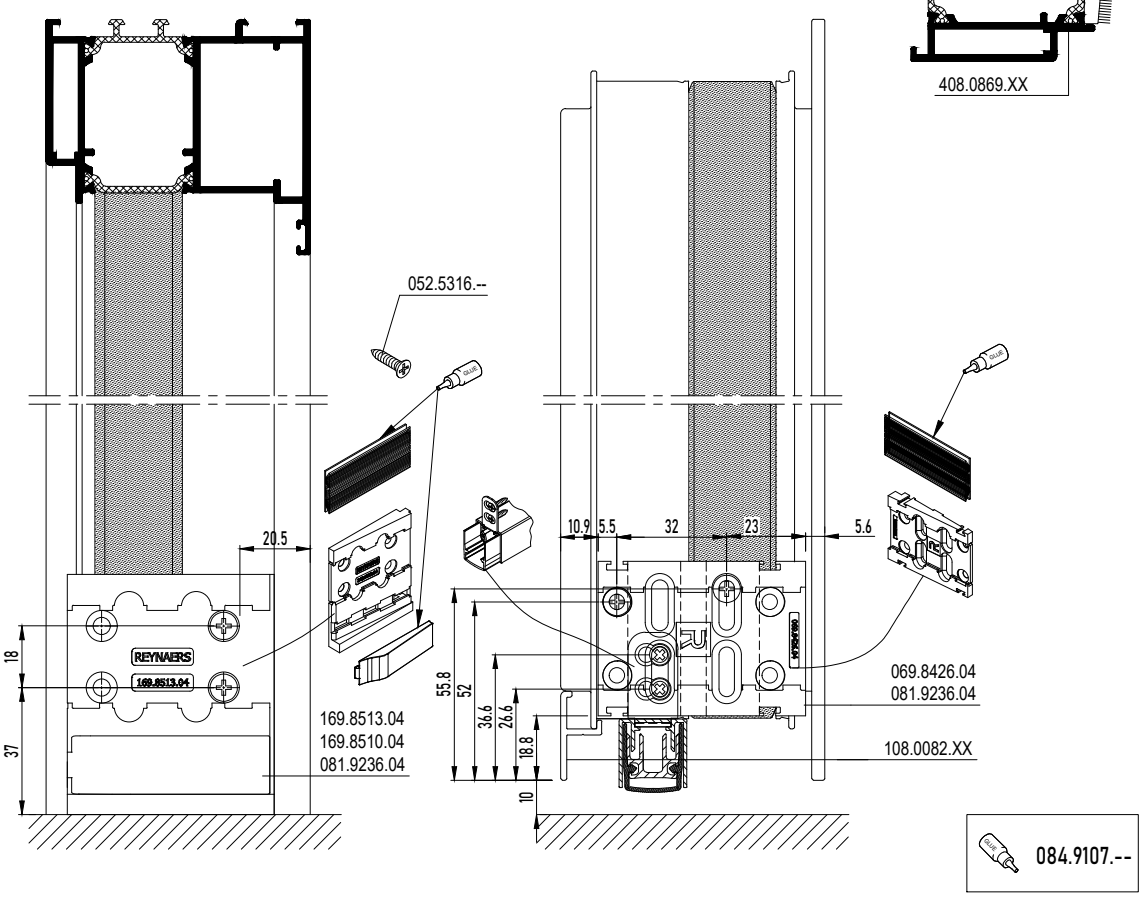



PANIC DOOR AUTOMATIC SEALING OUTWARD OPENING

DOOR OUTW. OPENING WITH AUTOMATIC DRAUGHT EXCLUDER - DOUBLE PANIC EN179/1125

MASTERLINE 8-Fu

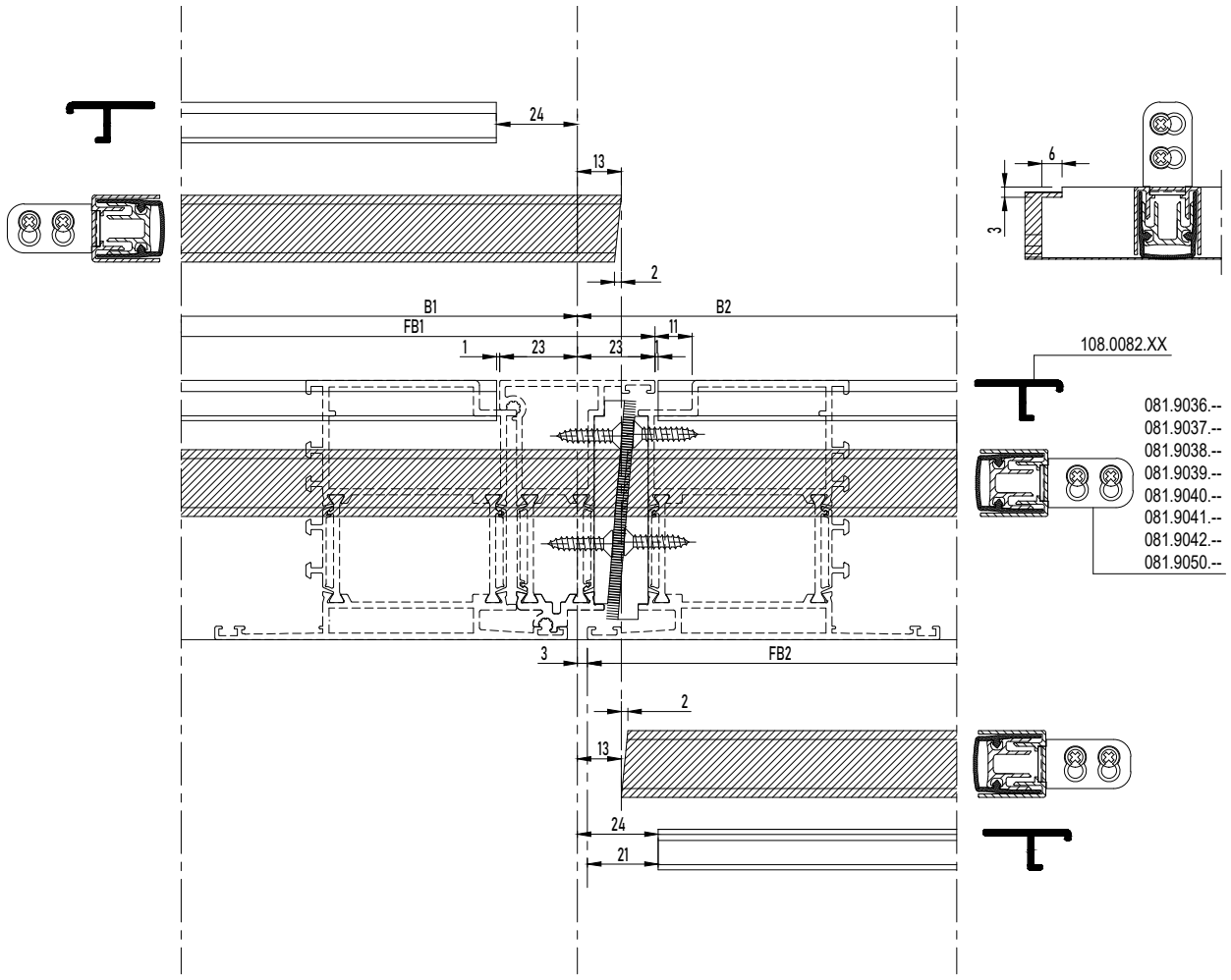

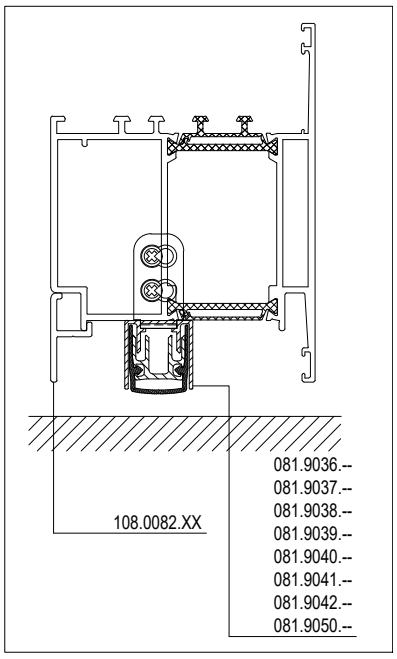

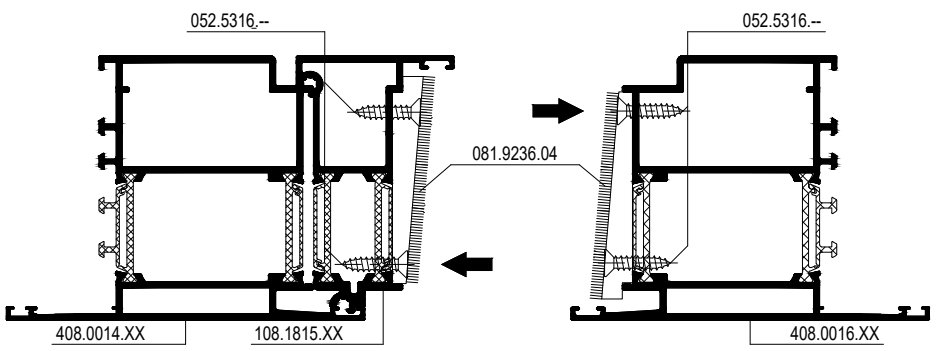

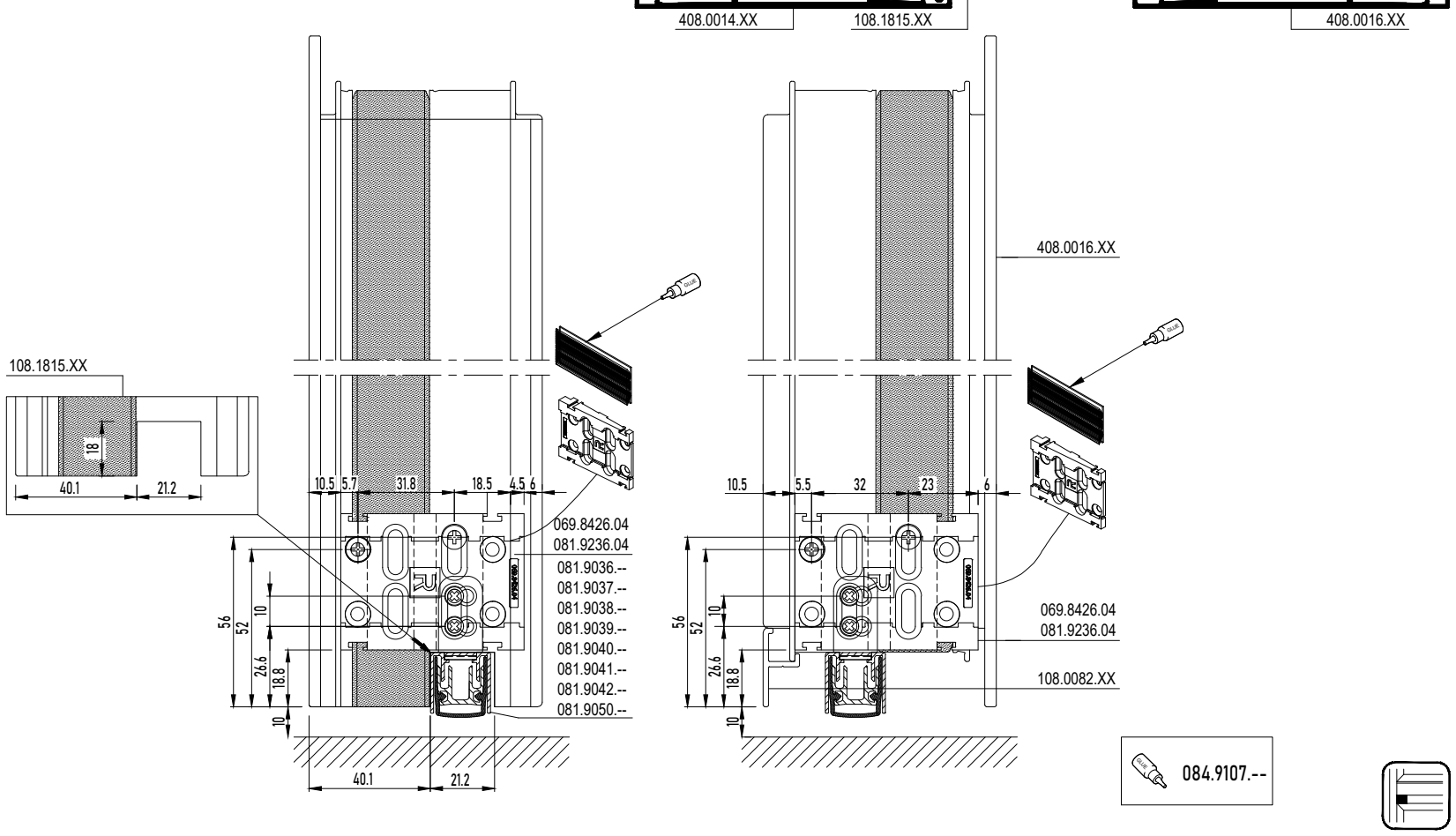

PANIC DOOR AUTOMATIC SEALING OUTWARD OPENING

DOOR OUTW. OPENING WITH AUTOMATIC DRAUGHT EXCLUDER - DOUBLE PANIC EN179/1125

MASTERLINE 8-Fu

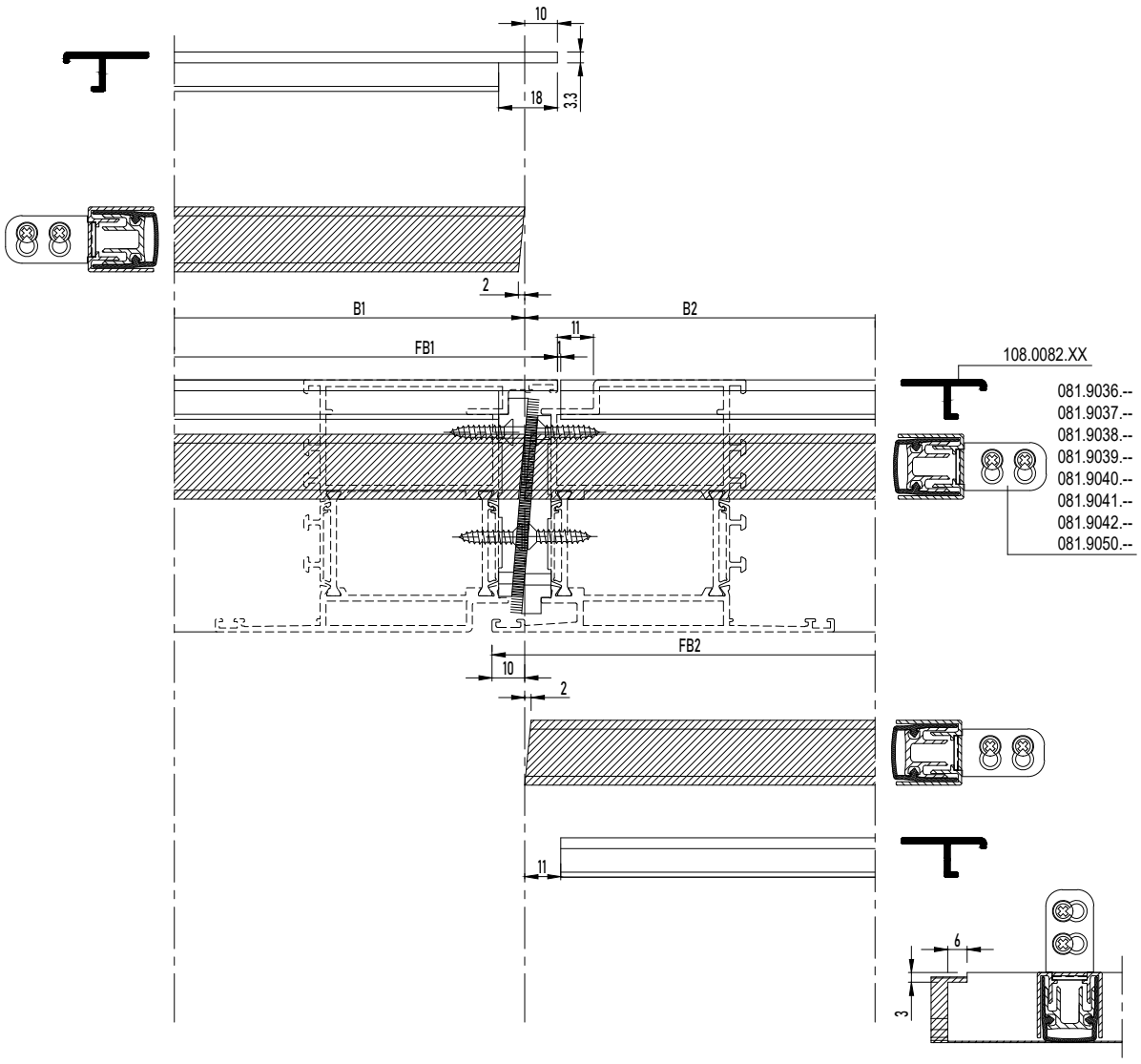

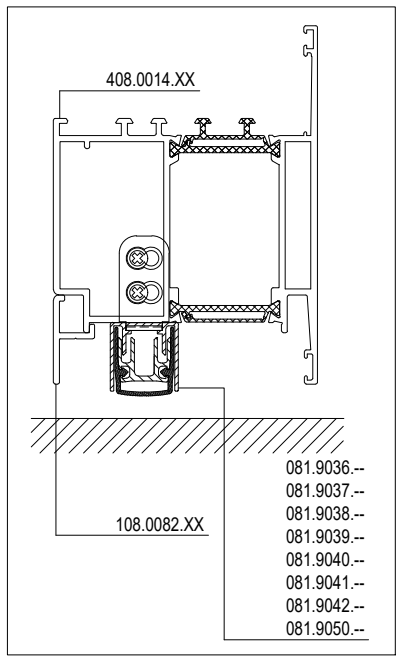

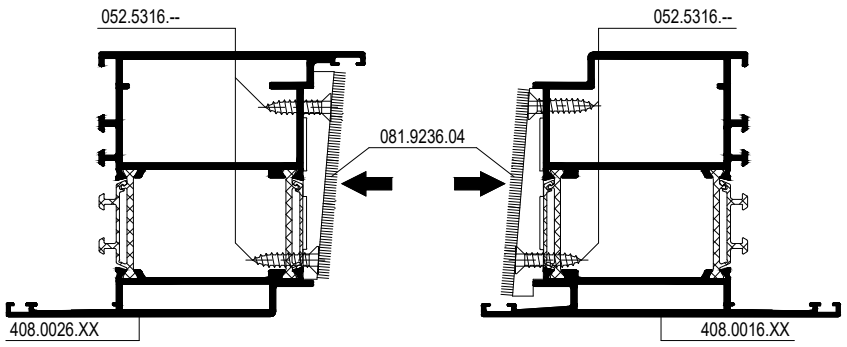

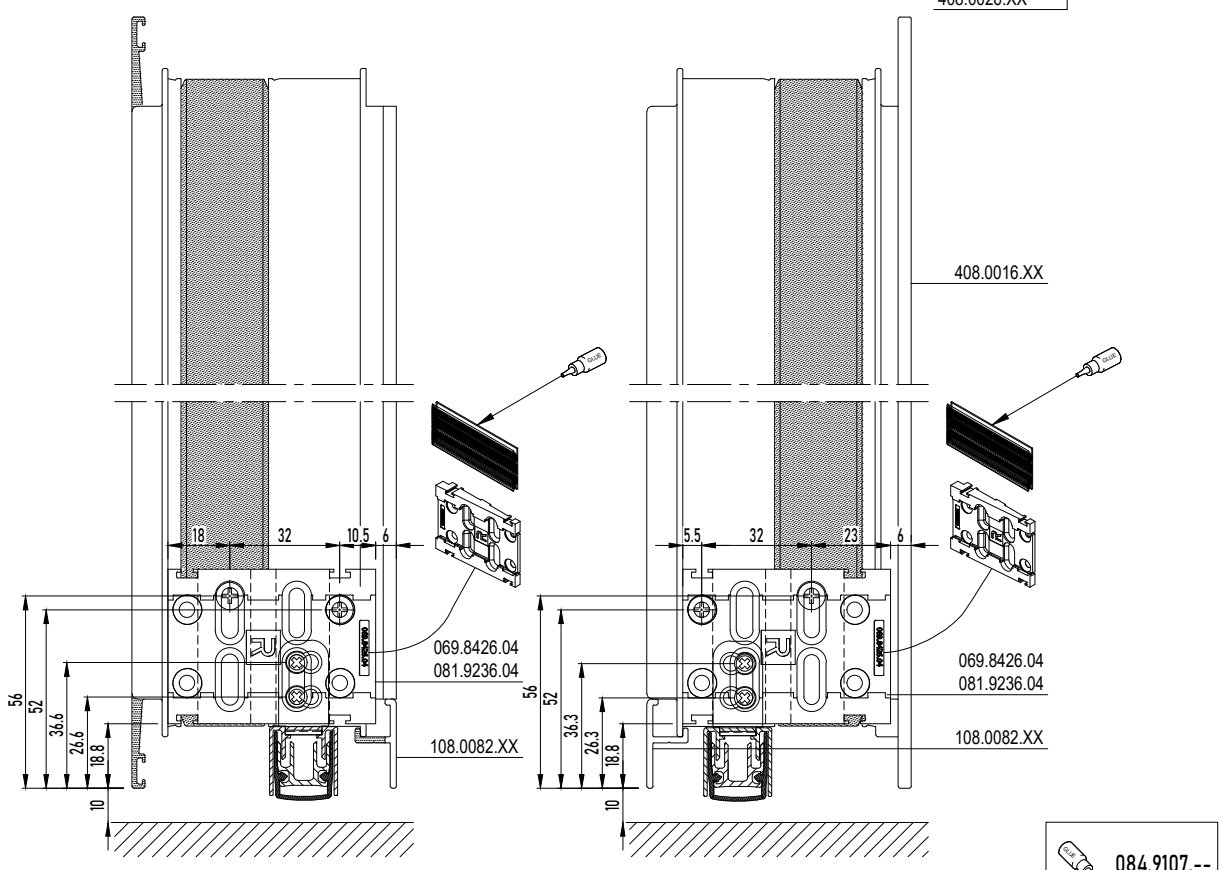

PANIC DOOR AUTOMATIC SEALING OUTWARD OPENING

DOOR OUTW. OPENING WITH AUTOMATIC DRAUGHT EXCLUDER - BOTTOM DOOR RAIL - DOUBLE PANIC EN179/1125

MASTERLINE 8-Fu

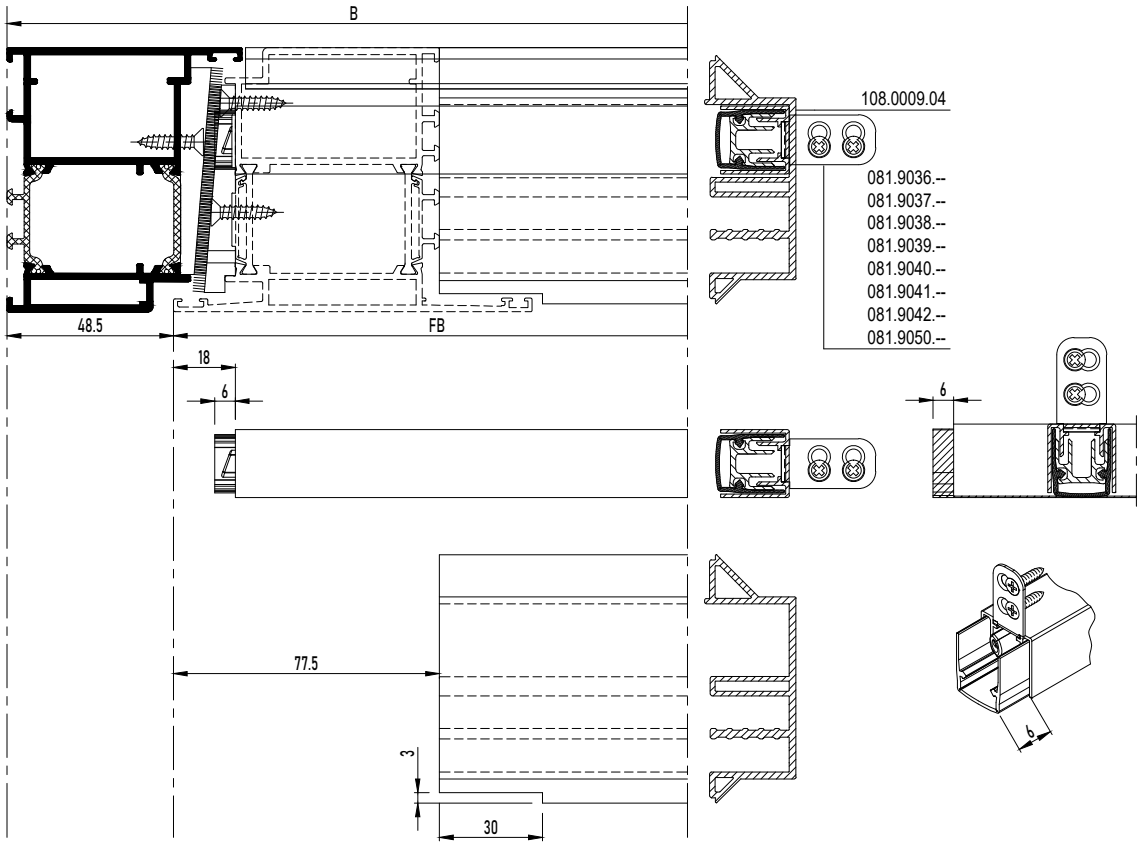

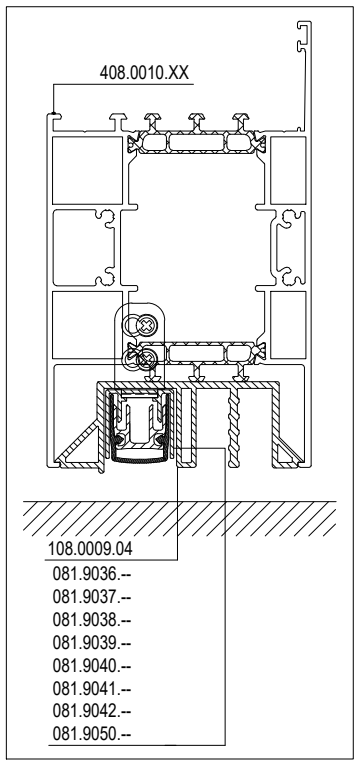

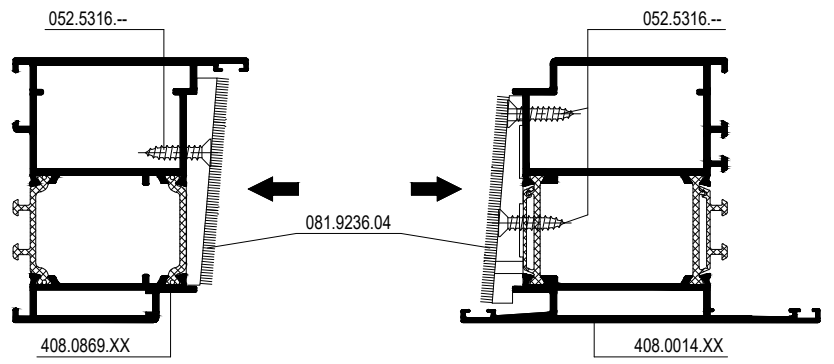

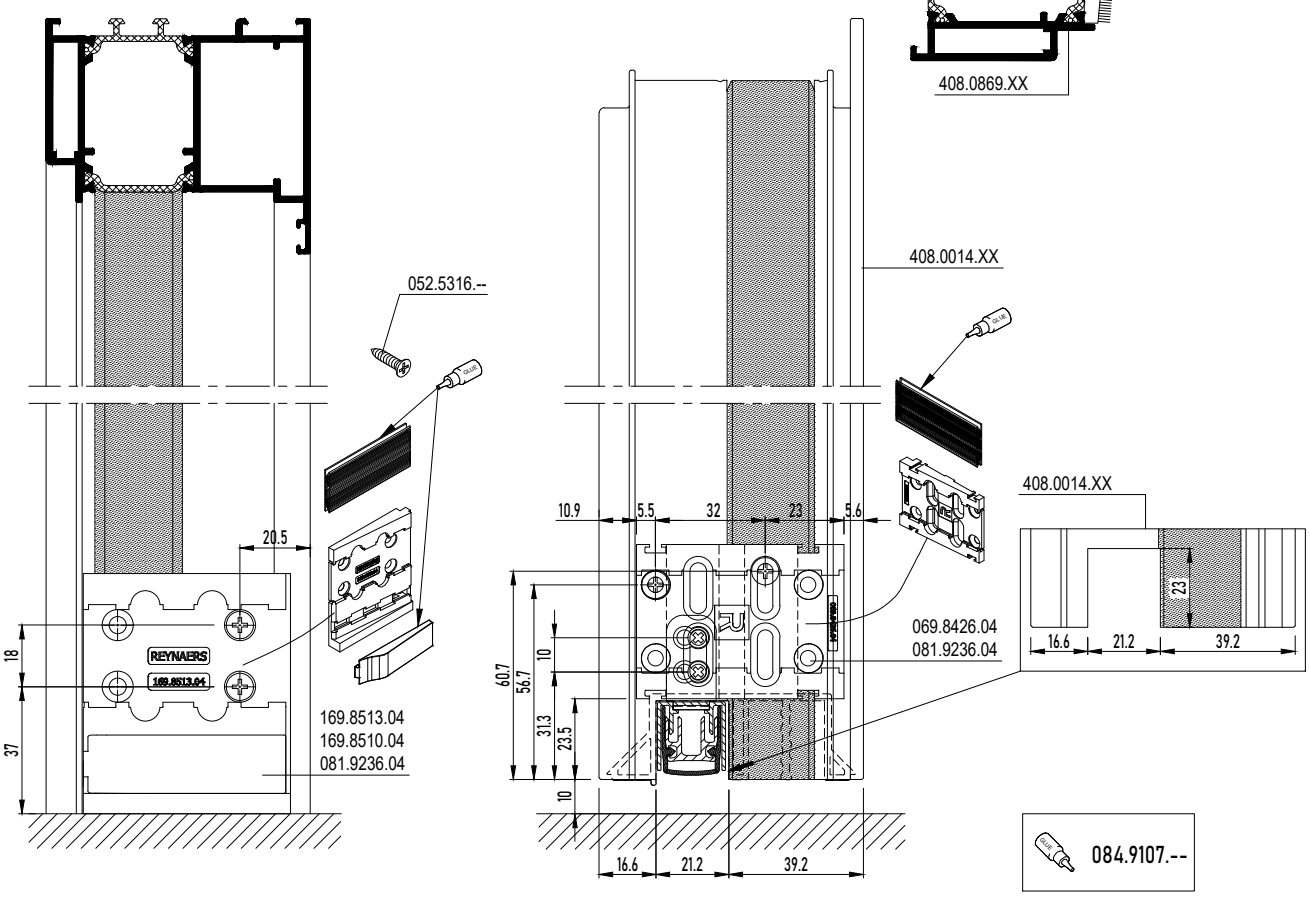

PANIC DOOR AUTOMATIC SEALING OUTWARD OPENING

DOOR OUTW. OPENING WITH AUTOMATIC DRAUGHT EXCLUDER - BOTTOM DOOR RAIL - DOUBLE PANIC EN179/1125

MASTERLINE 8-Fu

095.AKF6.00

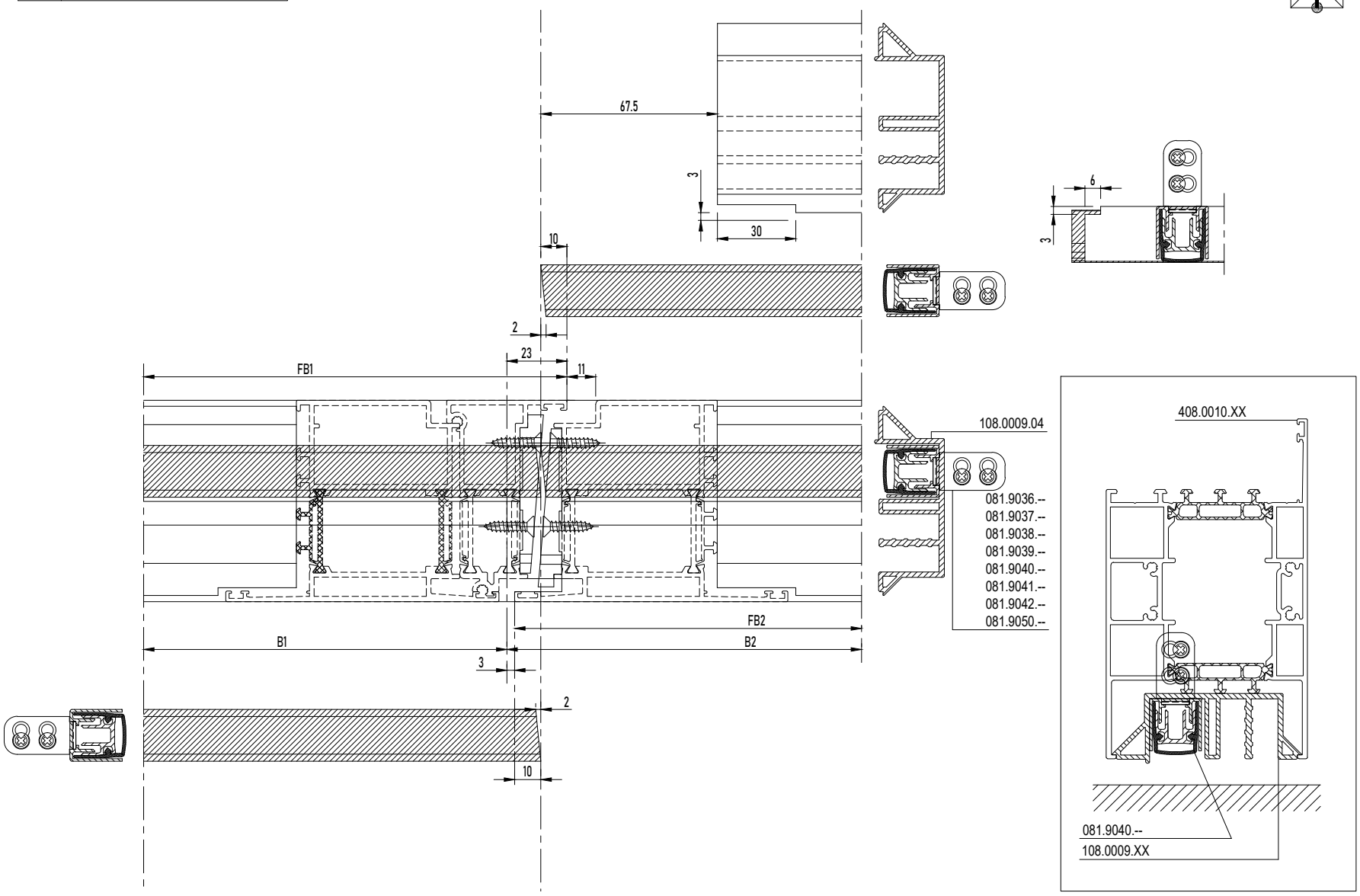

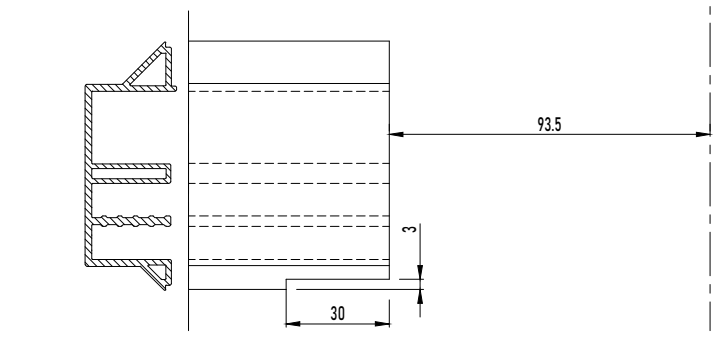

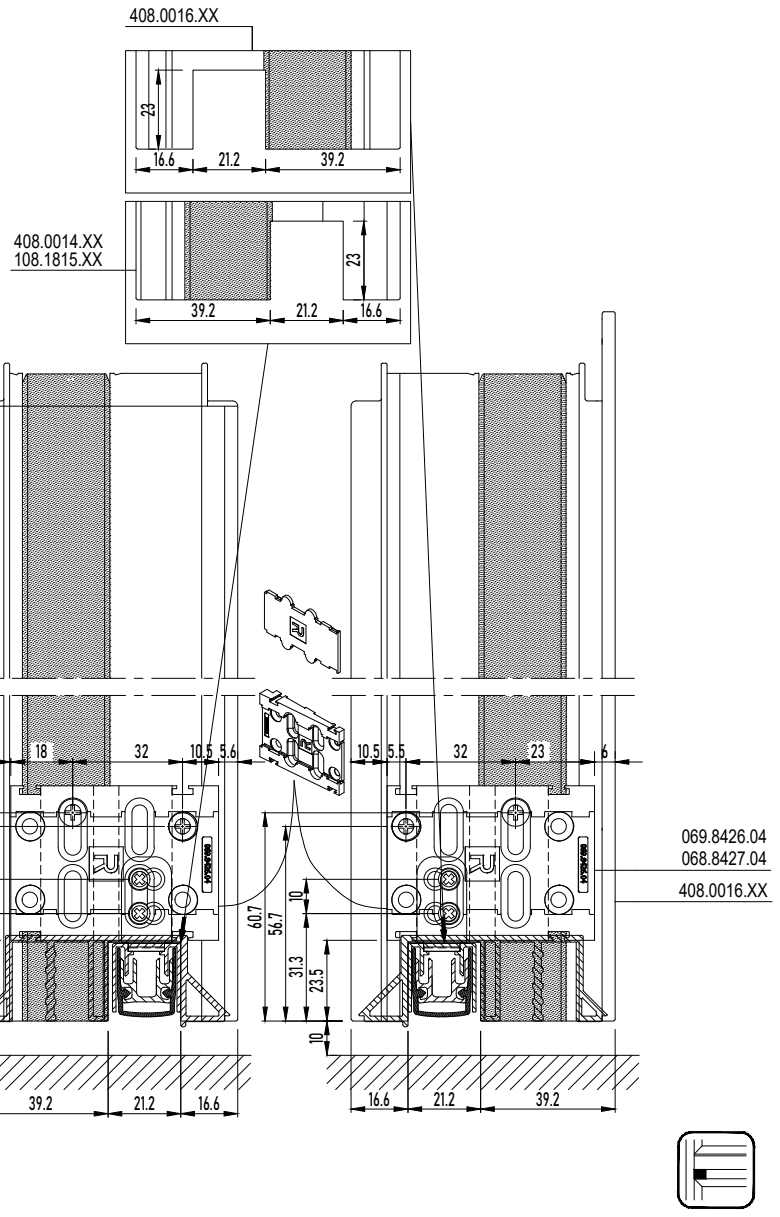

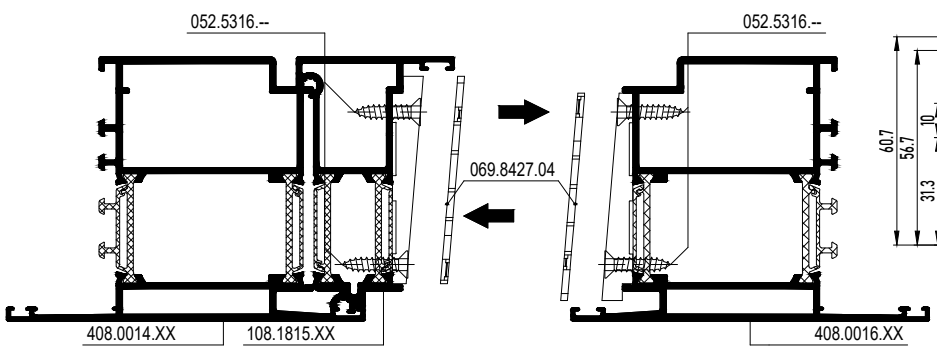

PANIC DOOR AUTOMATIC SEALING OUTWARD OPENING

DOOR OUTW. OPENING WITH AUTOMATIC DRAUGHT EXCLUDER - BOTTOM DOOR RAIL - DOUBLE PANIC EN179/1125

MASTERLINE 8-Fu

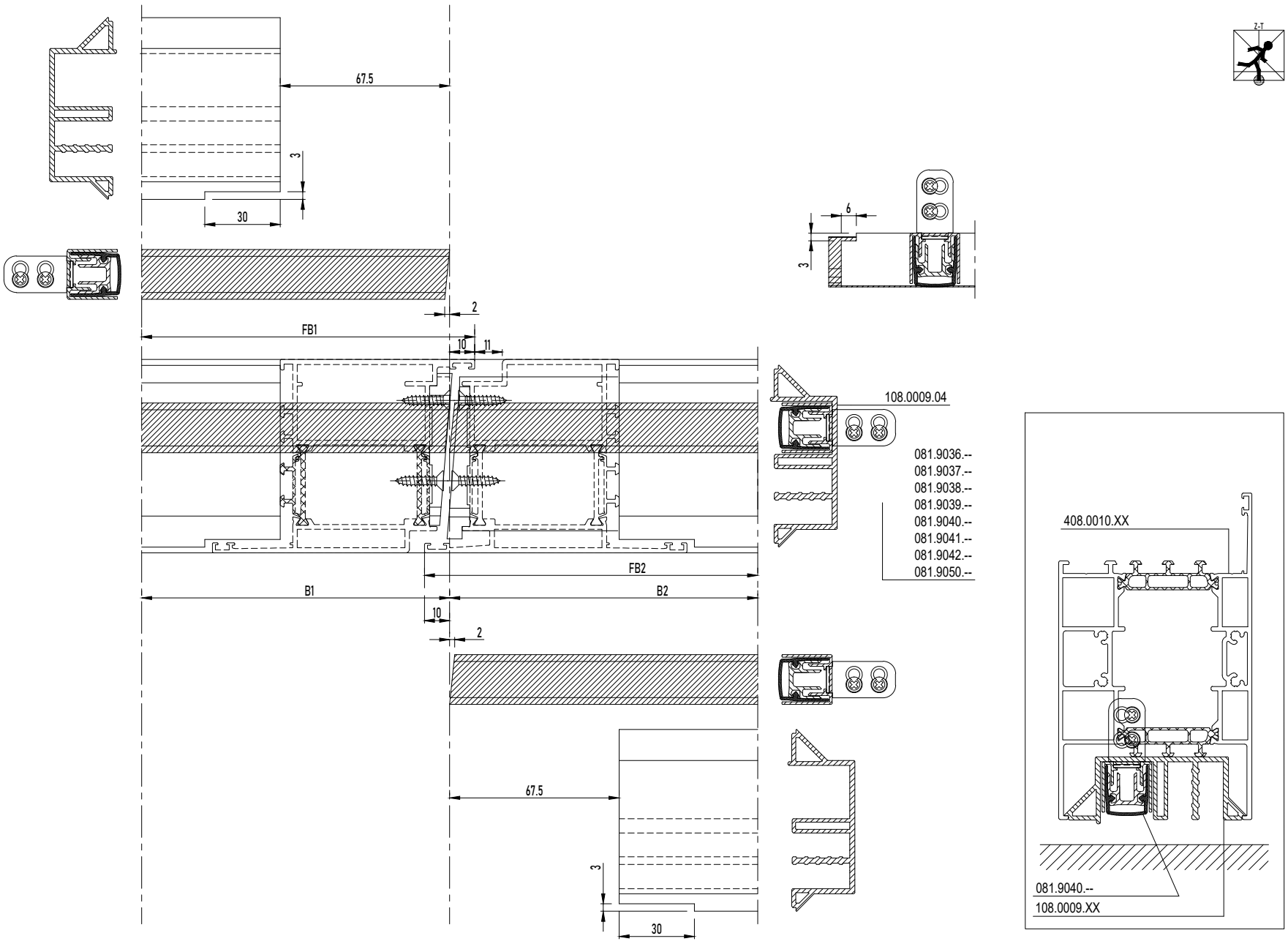

095.AKF6.00

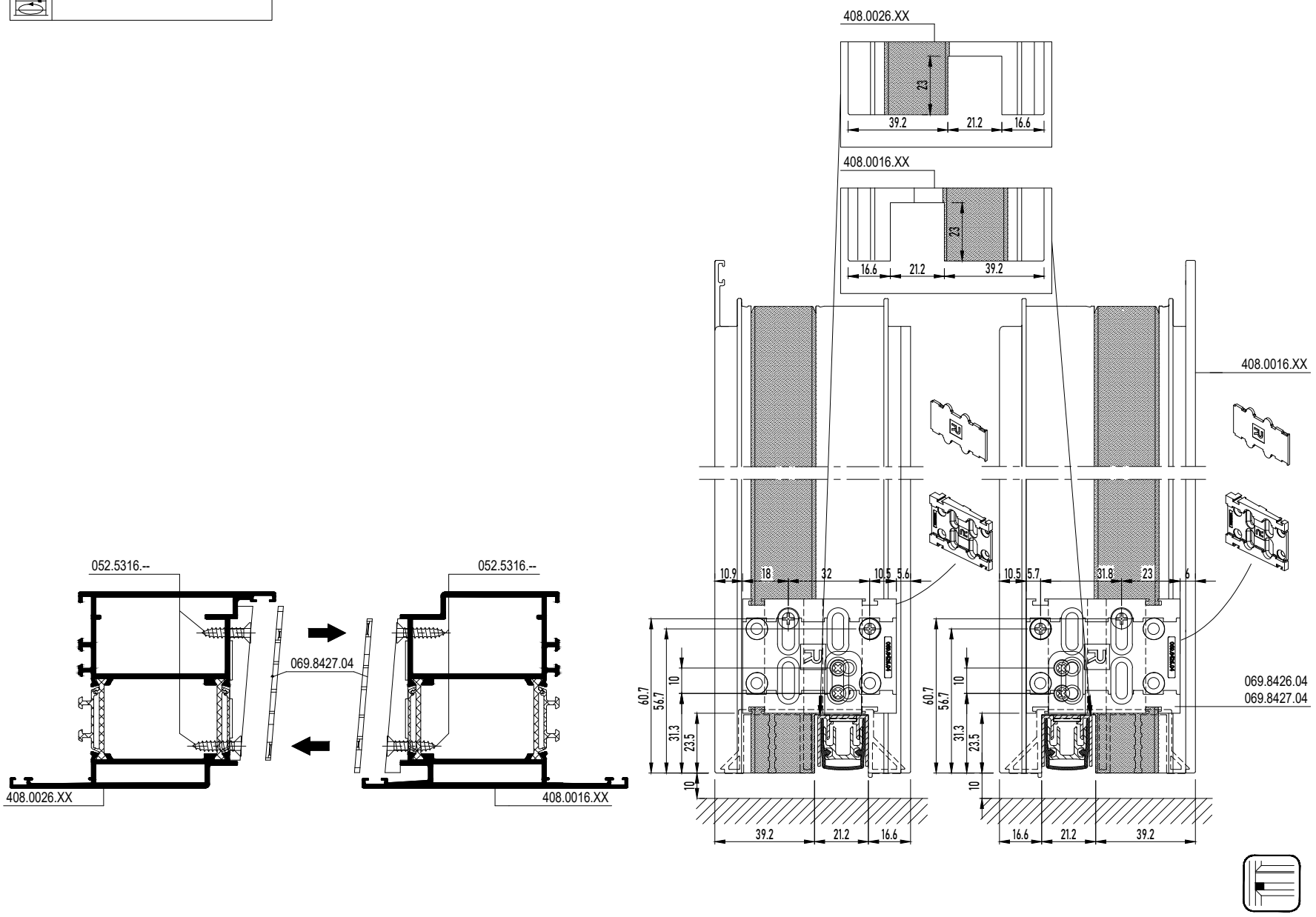

PANIC DOOR AUTOMATIC BRUSH OUTWARD OPENING

DOOR OUTW. OPENING WITH BRUSH - BOTTOM DOOR RAIL - DOUBLE PANIC EN179/1125

MASTERLINE 8-Fu

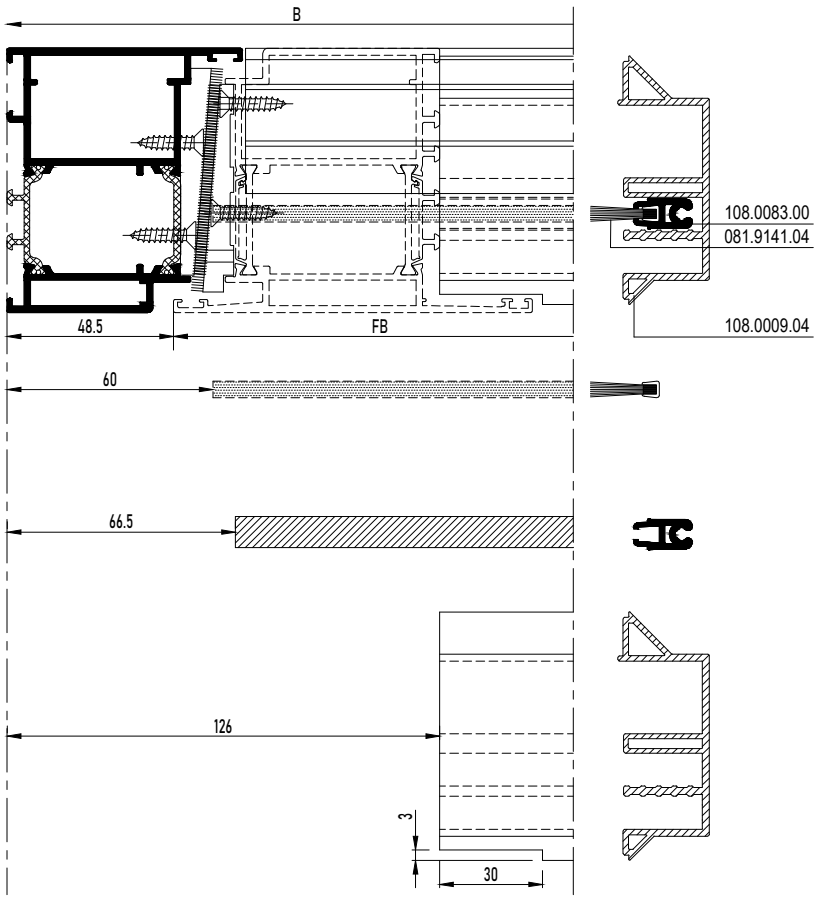



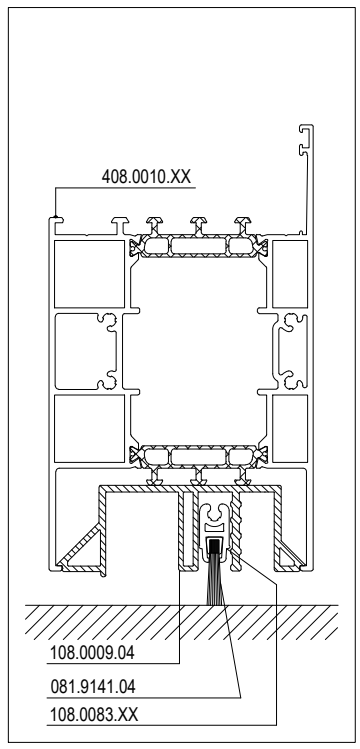

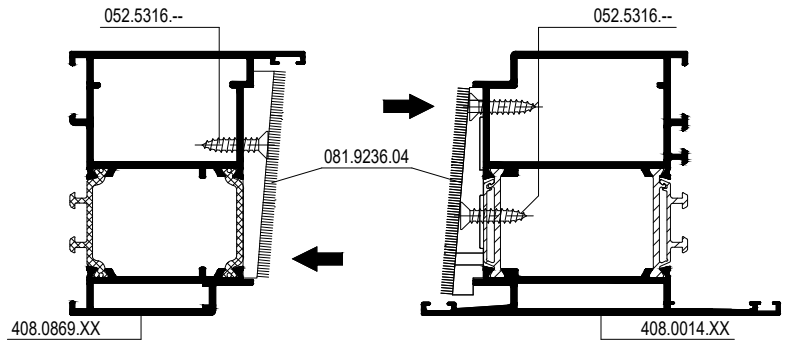

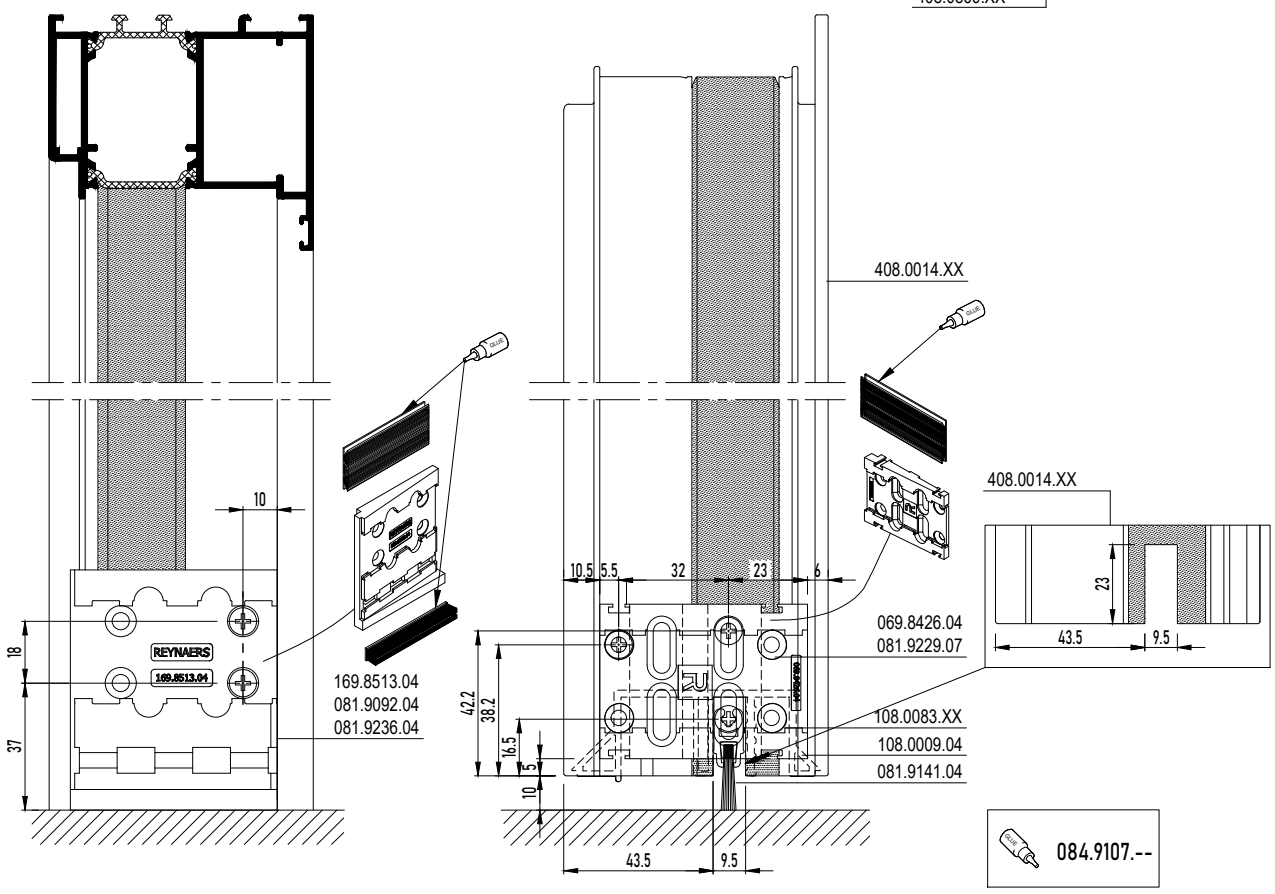



PANIC DOOR AUTOMATIC BRUSH OUTWARD OPENING

DOOR OUTW. OPENING WITH BRUSH - BOTTOM DOOR RAIL - DOUBLE PANIC EN179/1125

MASTERLINE 8-Fu

095.AKF6.00

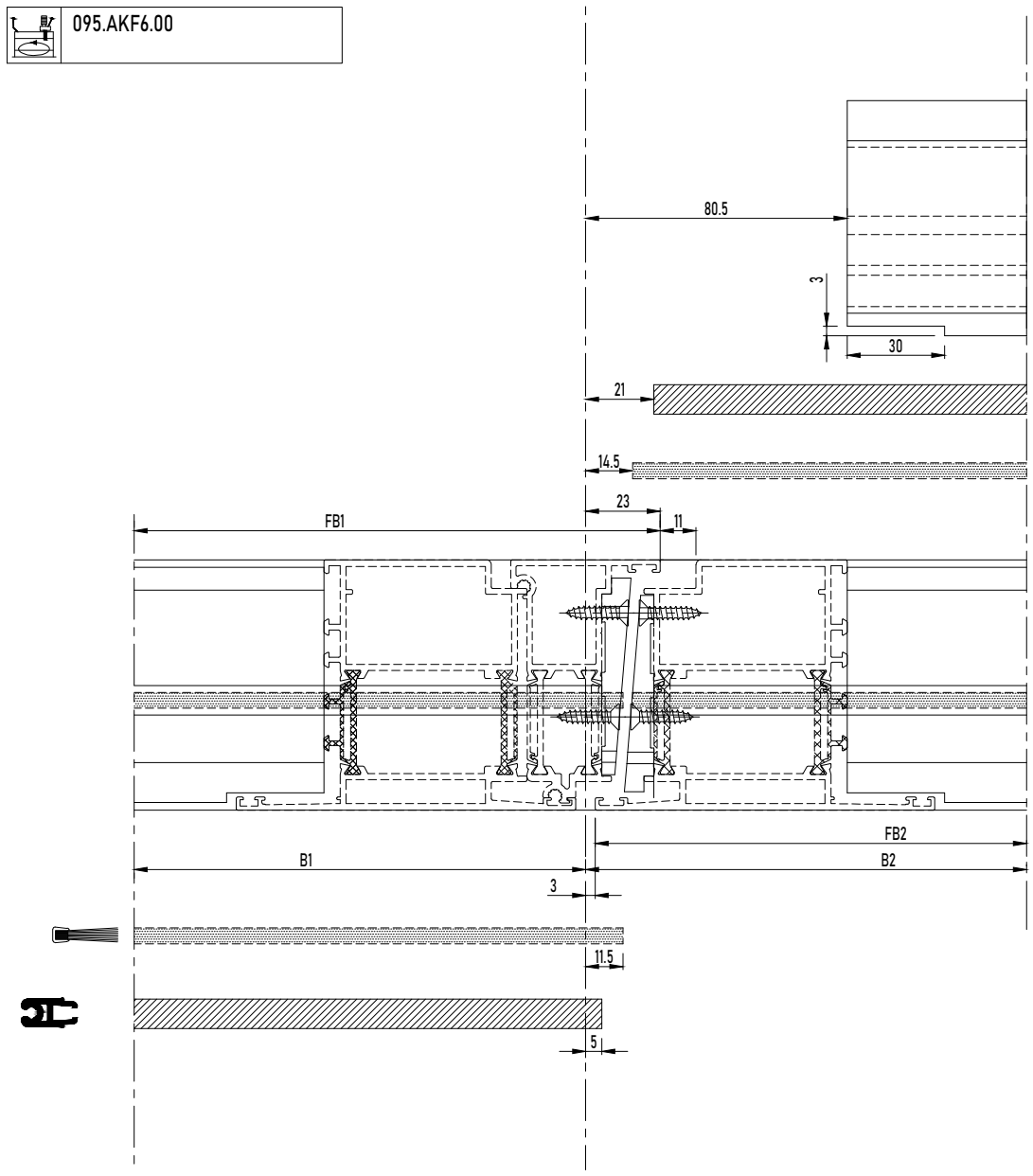

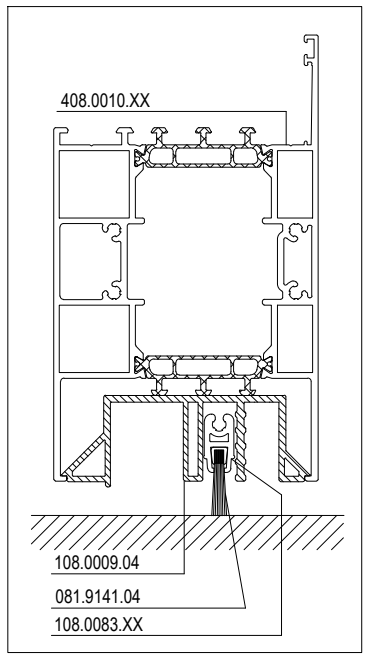

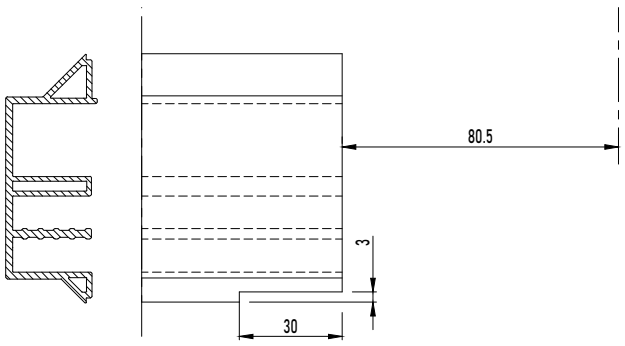

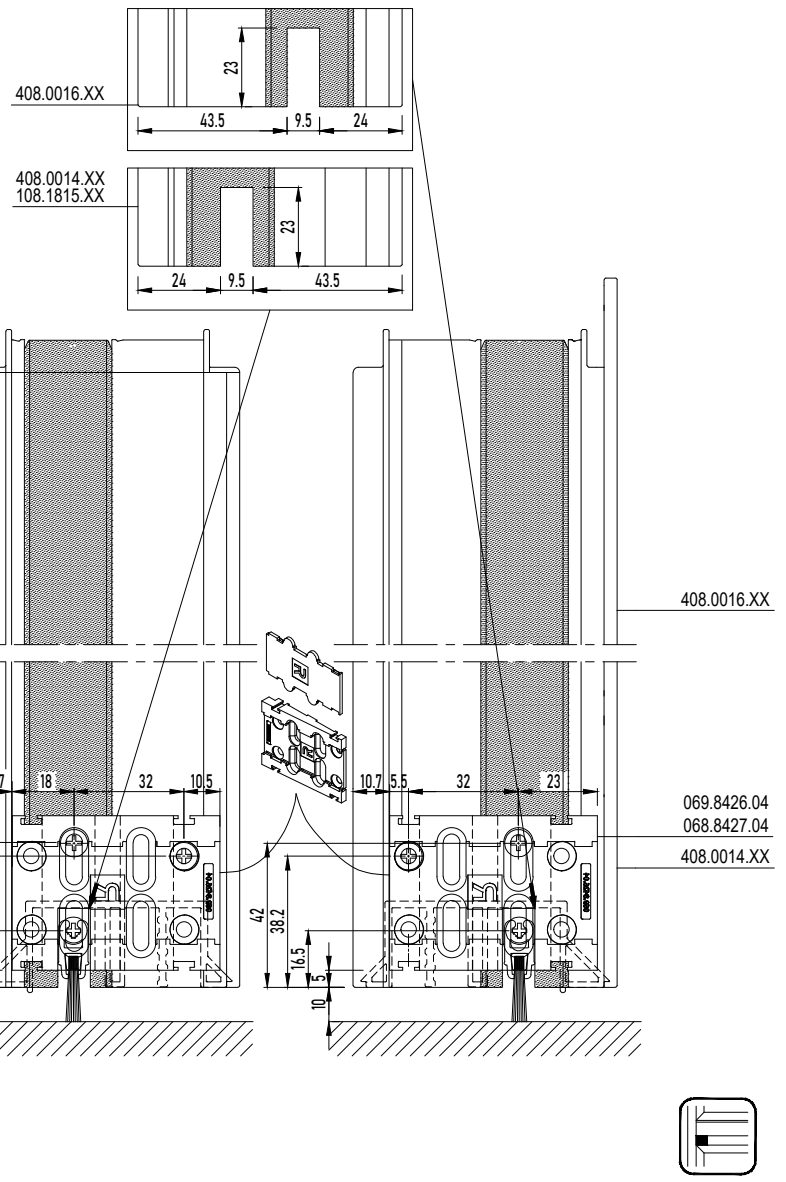

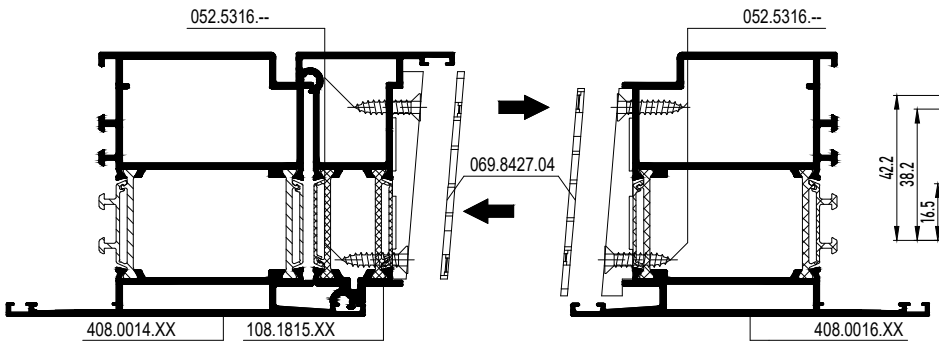

PANIC DOOR AUTOMATIC BRUSH OUTWARD OPENING

DOOR OUTW. OPENING WITH BRUSH - BOTTOM DOOR RAIL - DOUBLE PANIC EN179/1125

MASTERLINE 8-Fu

095.AKF6.00

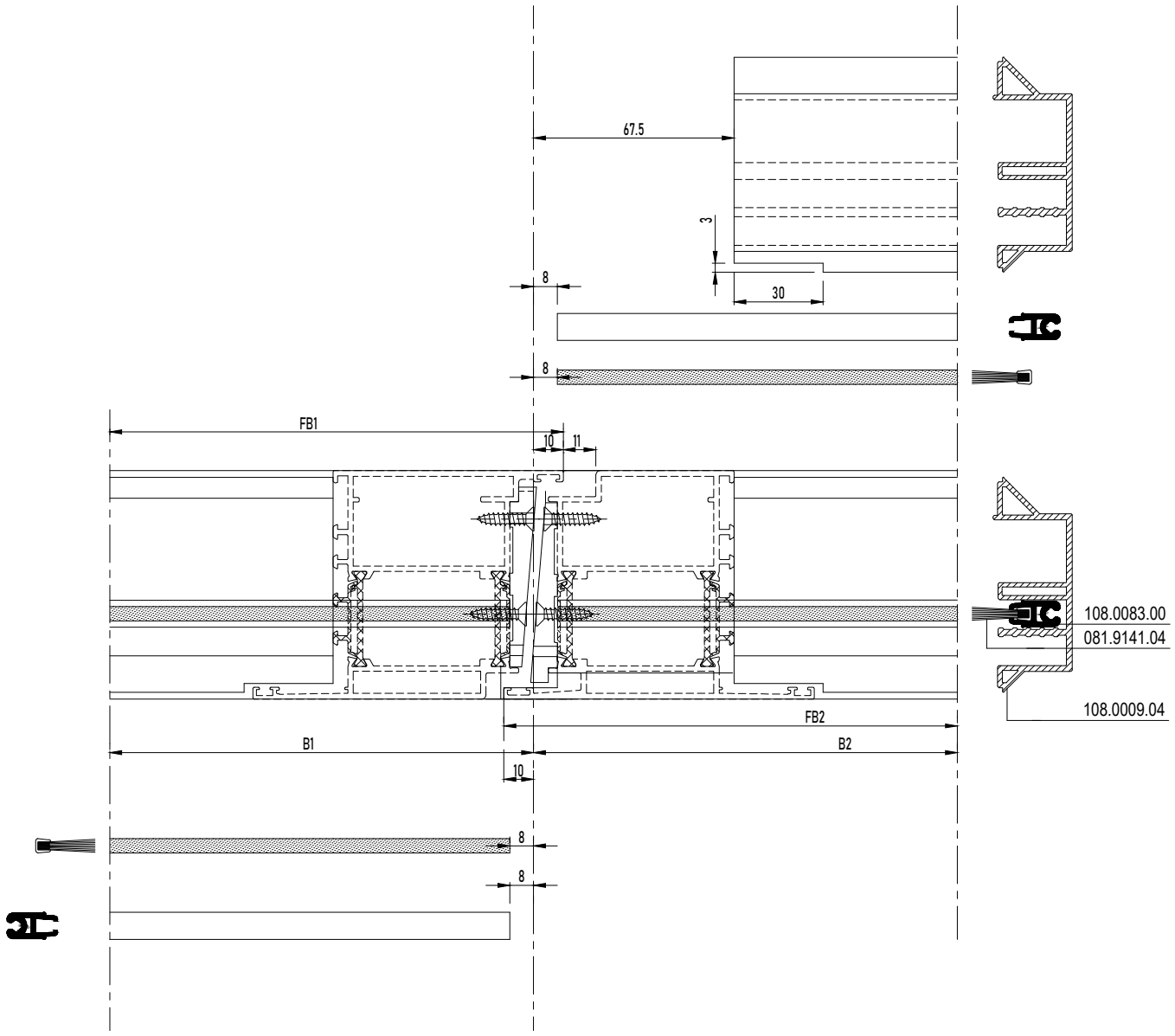

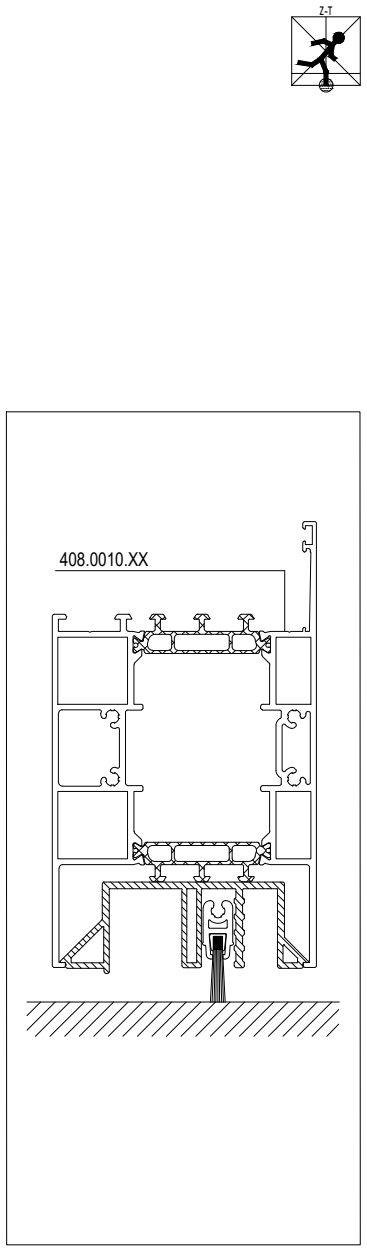

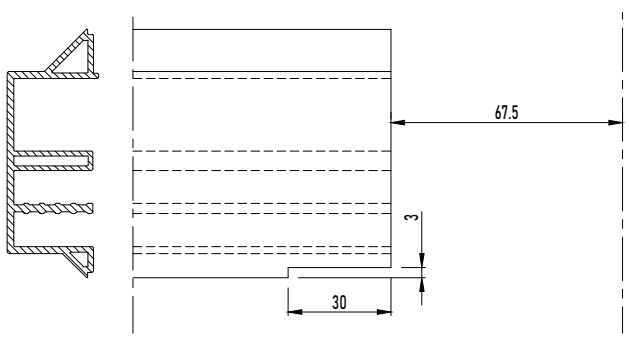

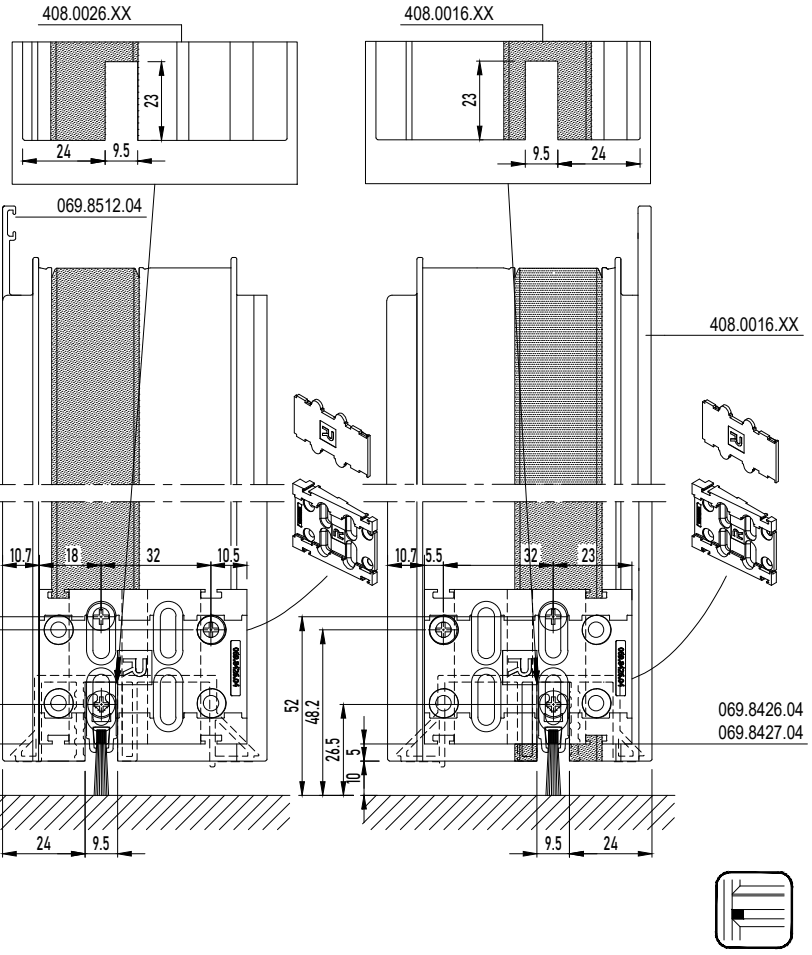

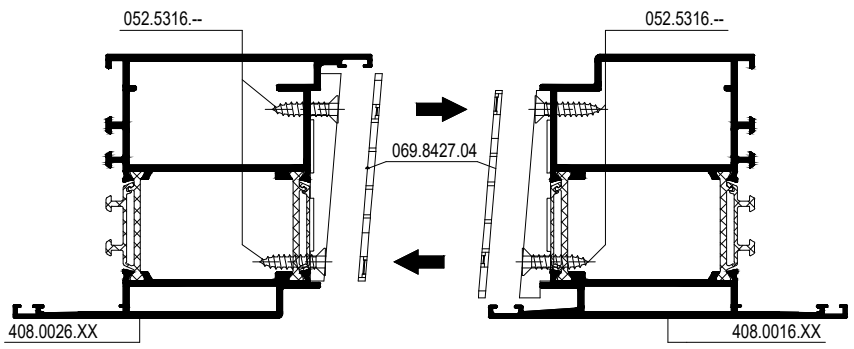

PANIC DOOR WEATHER STRIP OUTWARD OPENING

DOOR OUTW. OPENING WITH DOUBLE WEATHER STRIP - DOUBLE PANIC EN179/1125

MASTERLINE 8-Fu

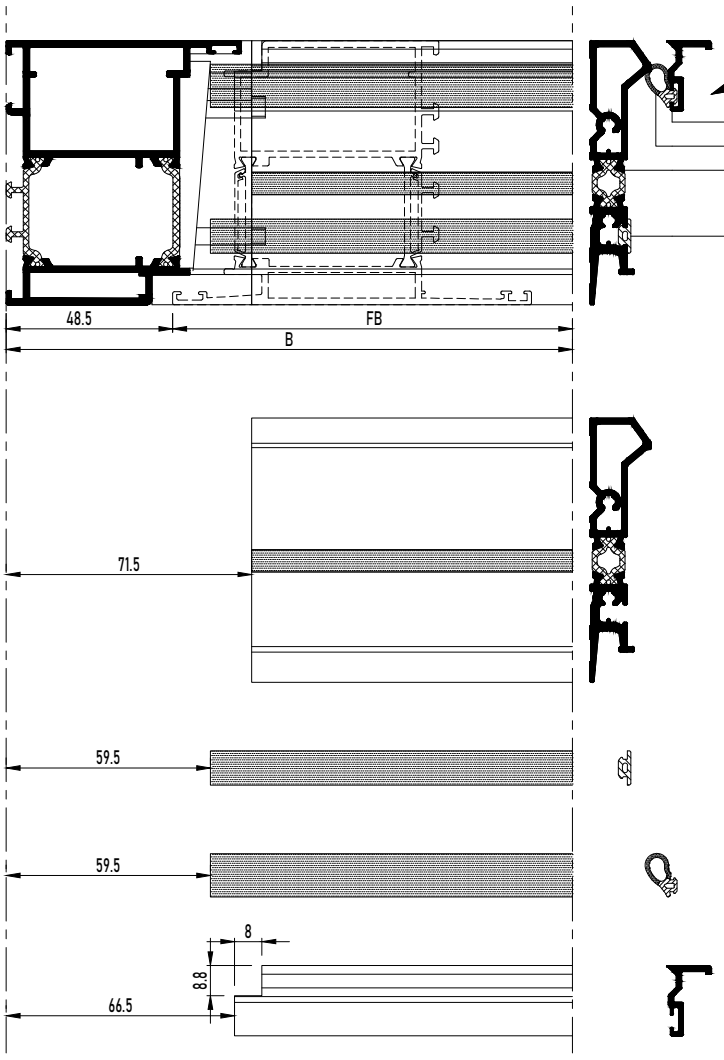

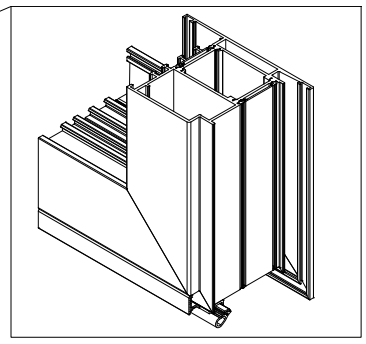



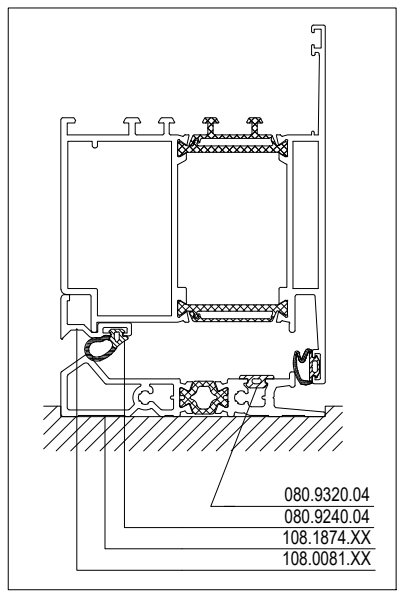

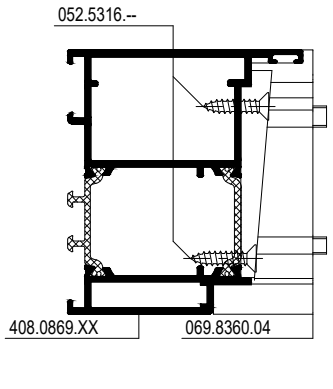

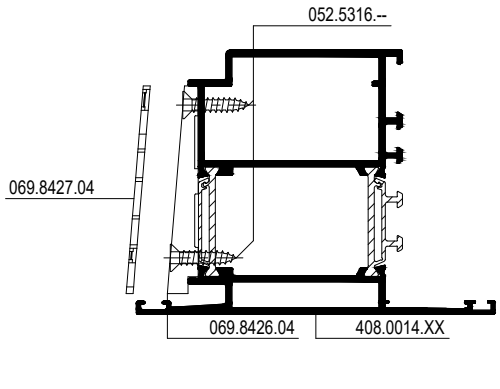

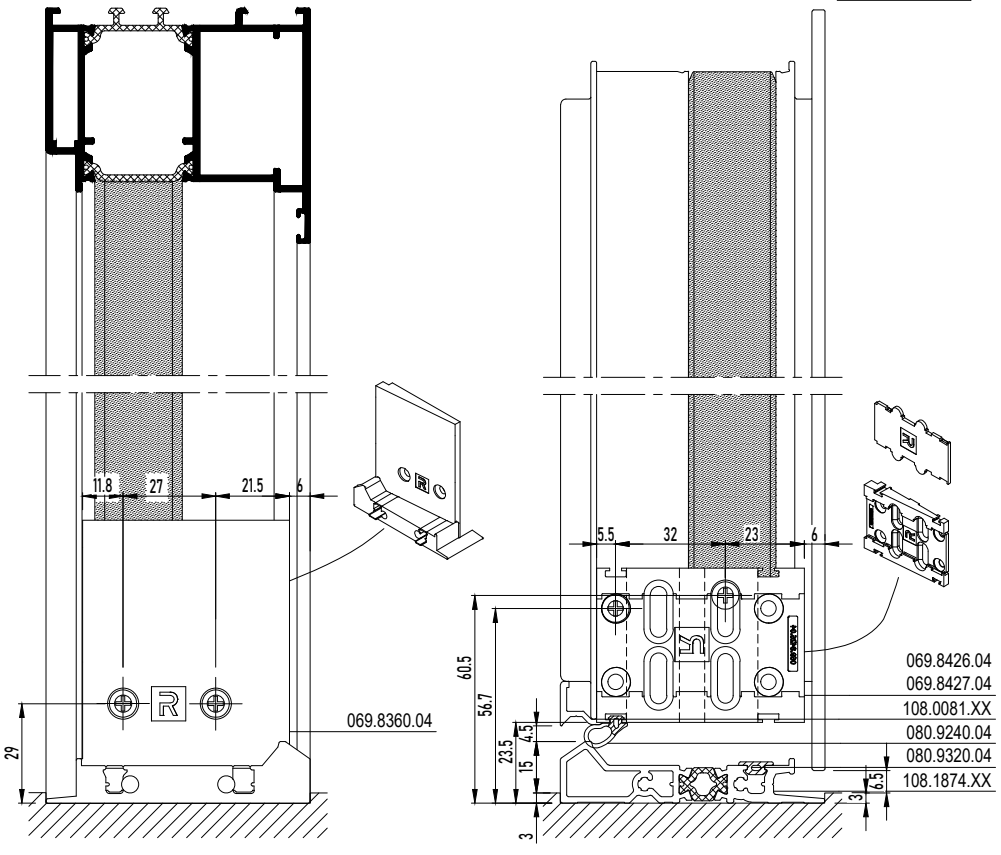



PANIC DOOR WEATHER STRIP OUTWARD OPENING

DOOR OUTW. OPENING WITH DOUBLE WEATHER STRIP - DOUBLE PANIC EN179/1125

MASTERLINE 8-Fu

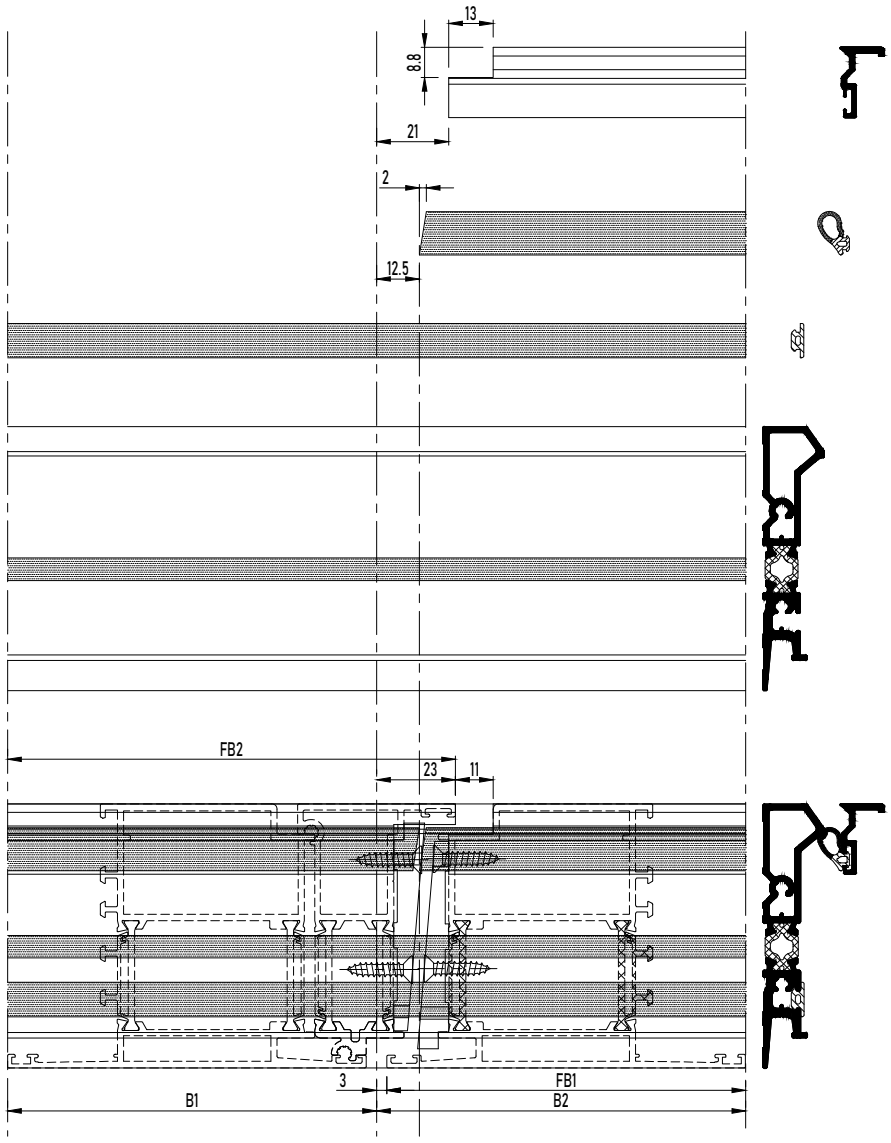



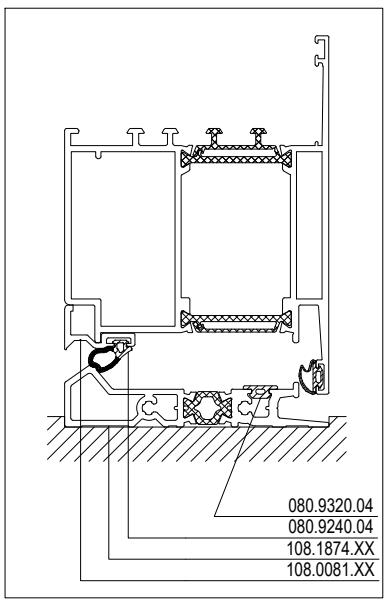

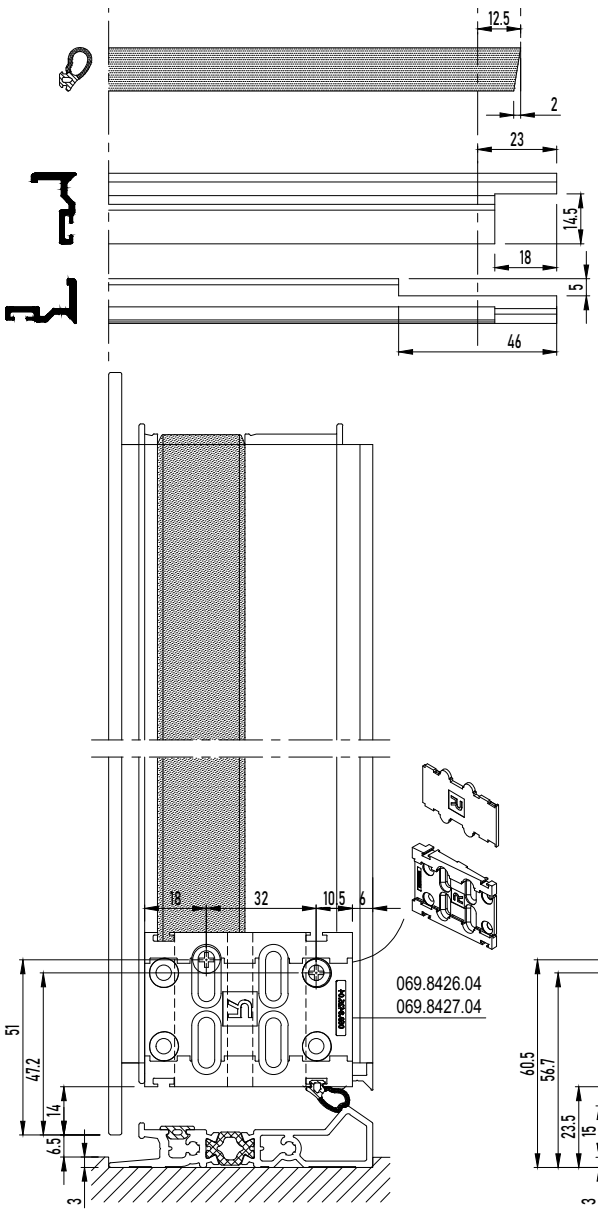

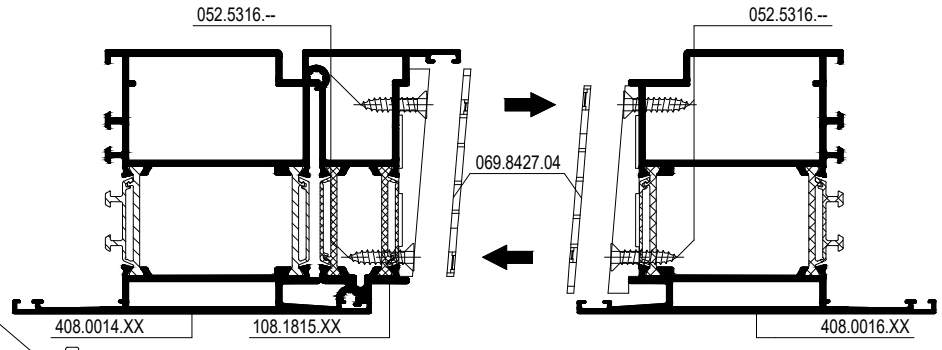

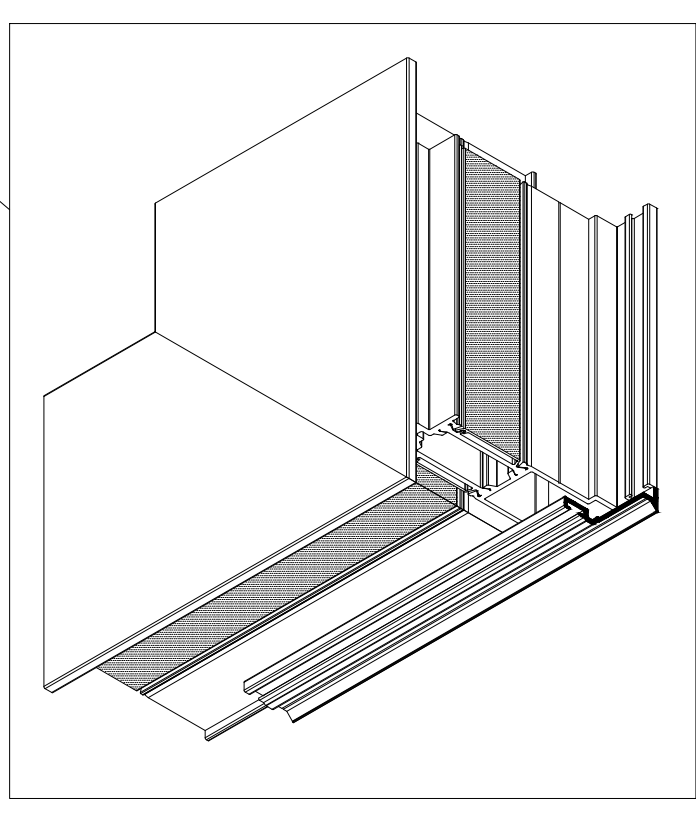



PANIC DOOR WEATHER STRIP OUTWARD OPENING

DOOR OUTW. OPENING WITH DOUBLE WEATHER STRIP - DOUBLE PANIC EN179/1125

MASTERLINE 8-Fu

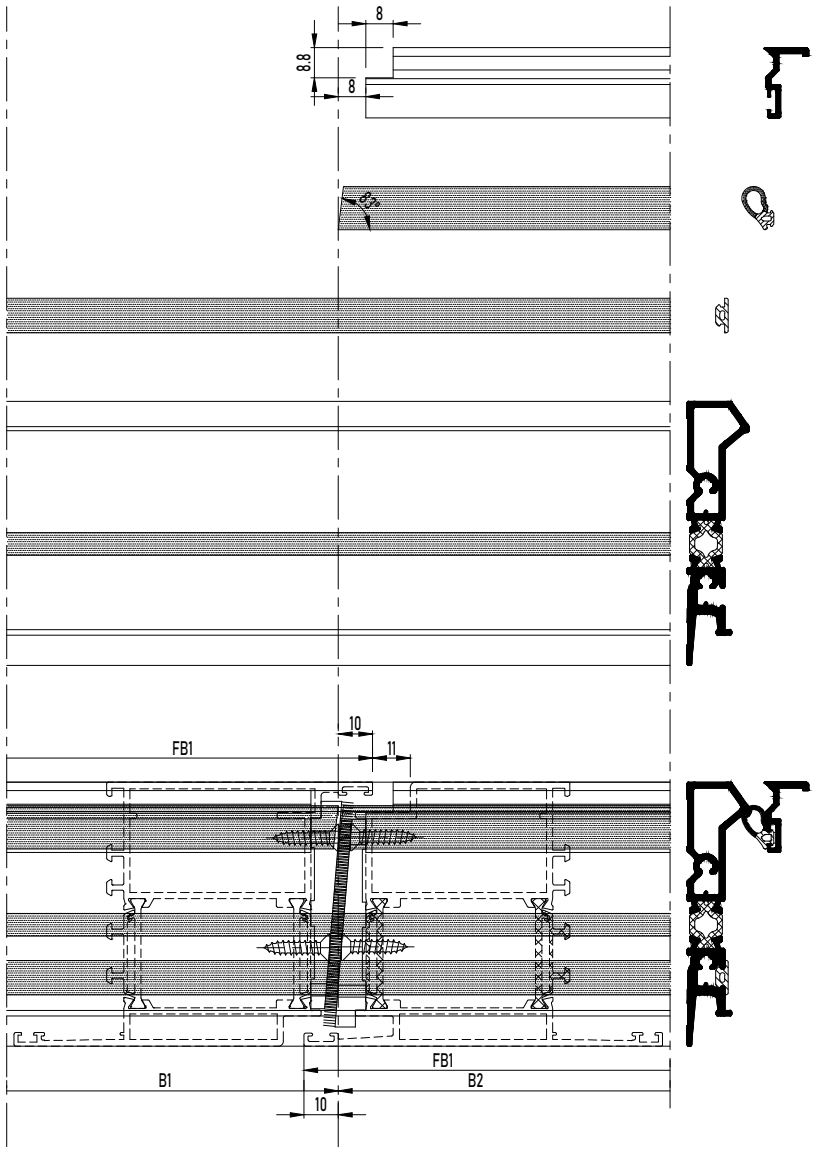



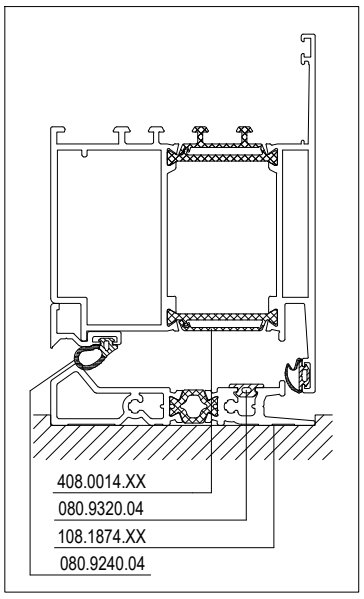

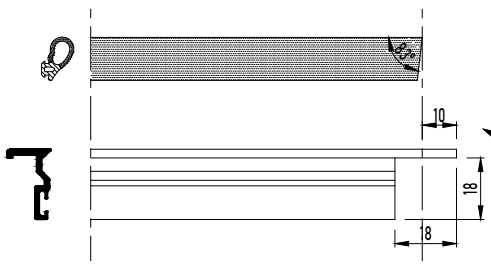

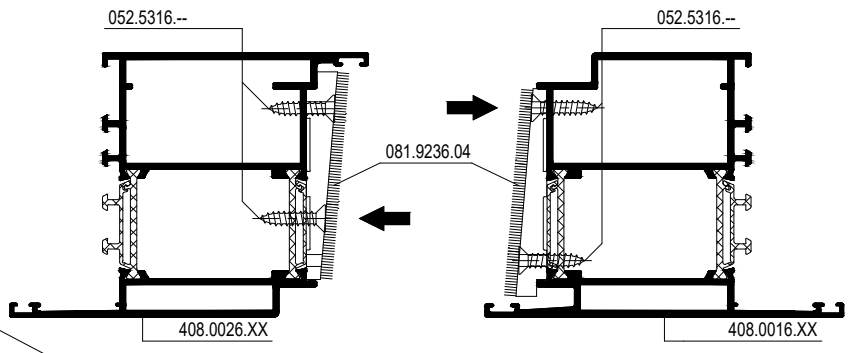

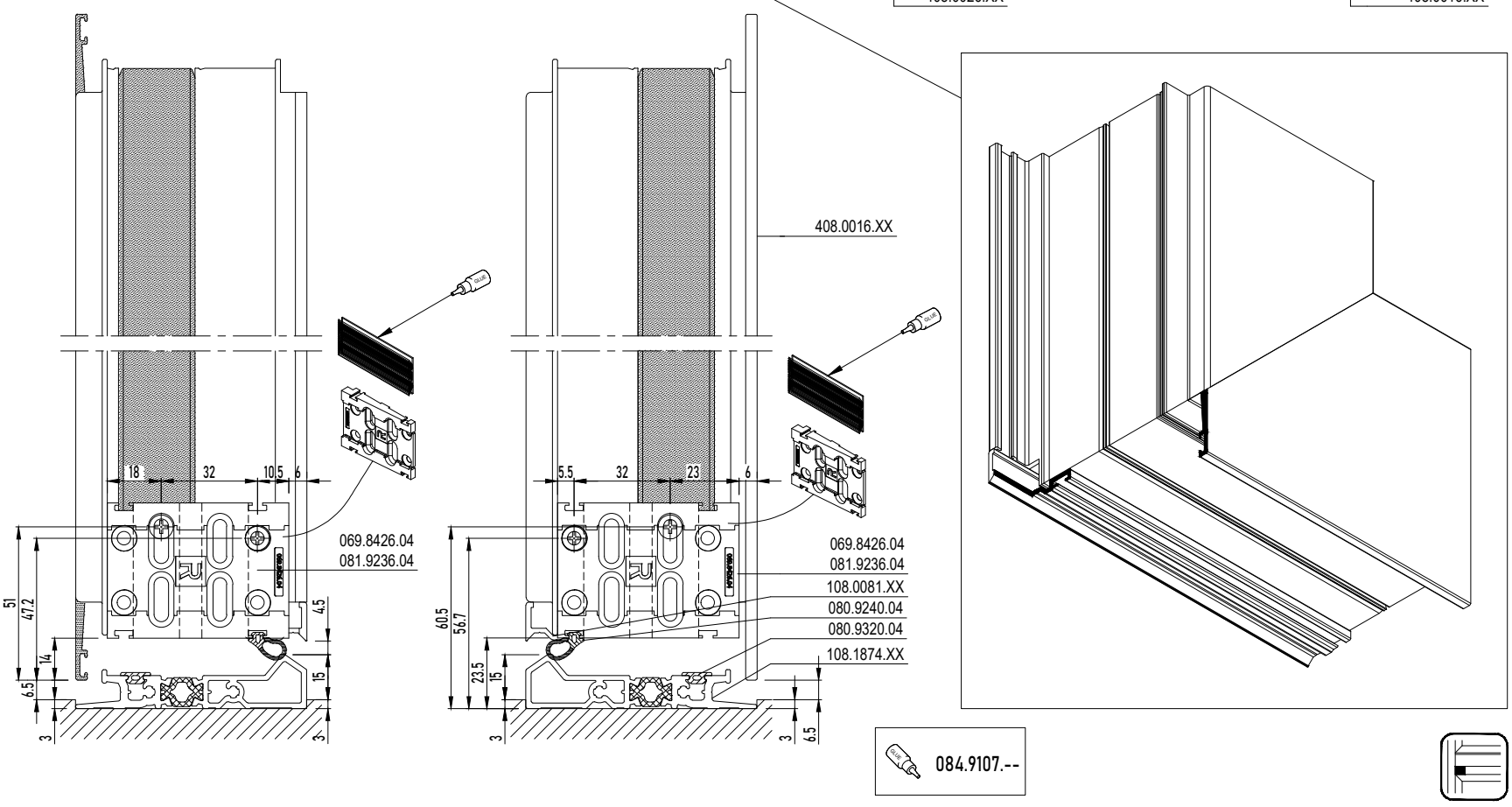

PANIC DOOR WEATHER STRIP OUTWARD OPENING

DOOR OUTW. OPENING WITH DOUBLE WEATHER STRIP - BOTTOM DOOR RAIL - DOUBLE PANIC EN179/1125

MASTERLINE 8-Fu

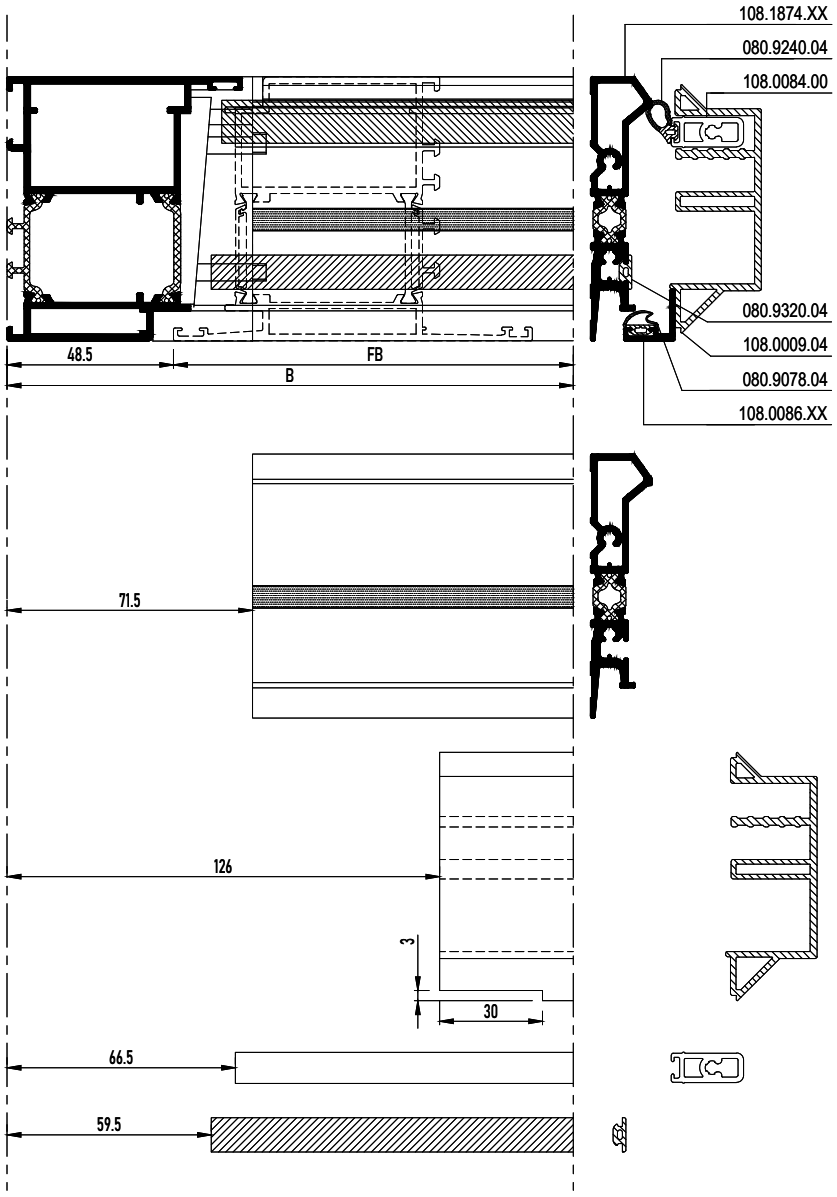

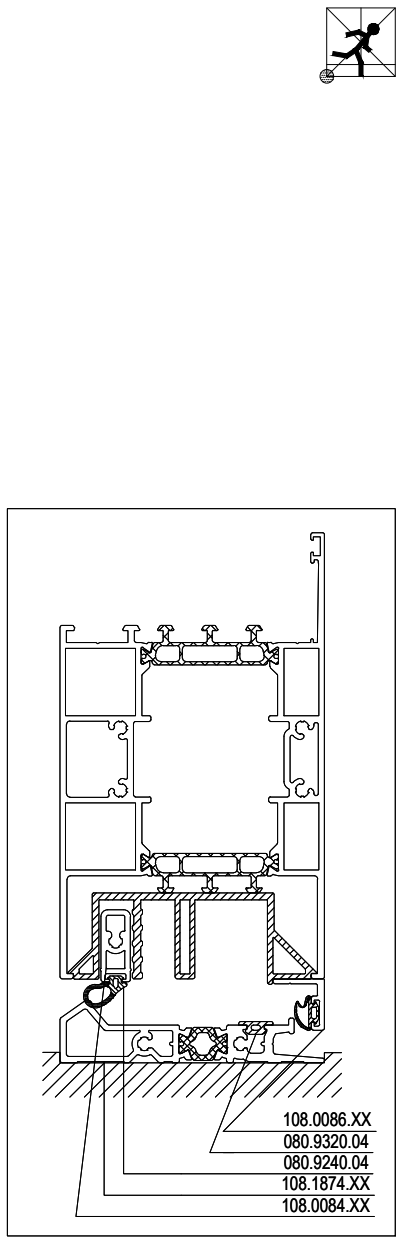

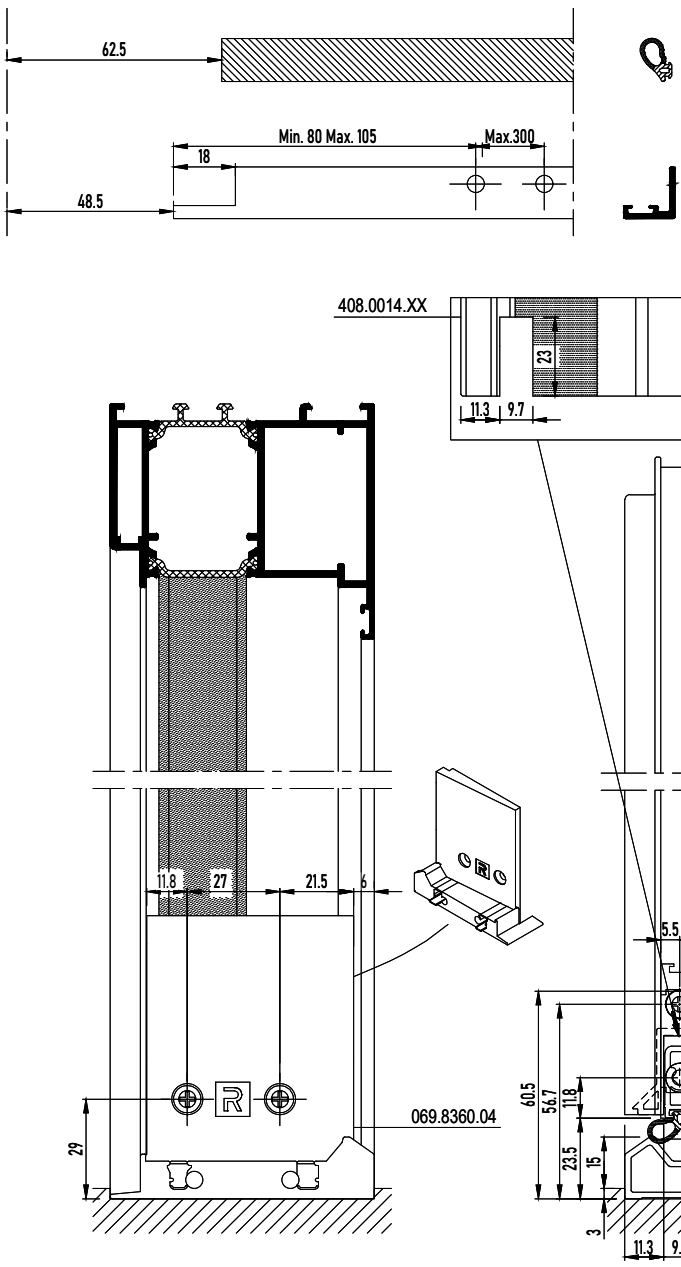

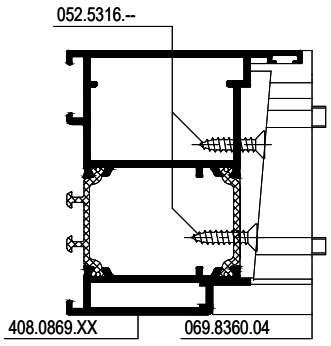

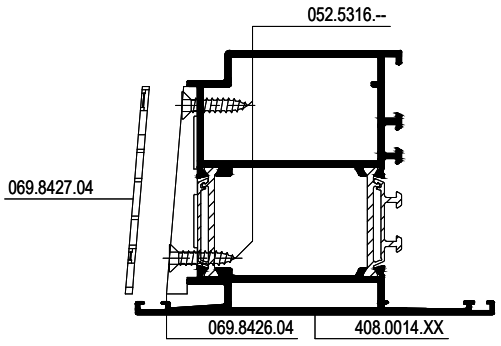

PANIC DOOR WEATHER STRIP OUTWARD OPENING

DOOR OUTW. OPENING WITH DOUBLE WEATHER STRIP - BOTTOM DOOR RAIL - DOUBLE PANIC EN179/1125

MASTERLINE 8-Fu

095.AKF6.00

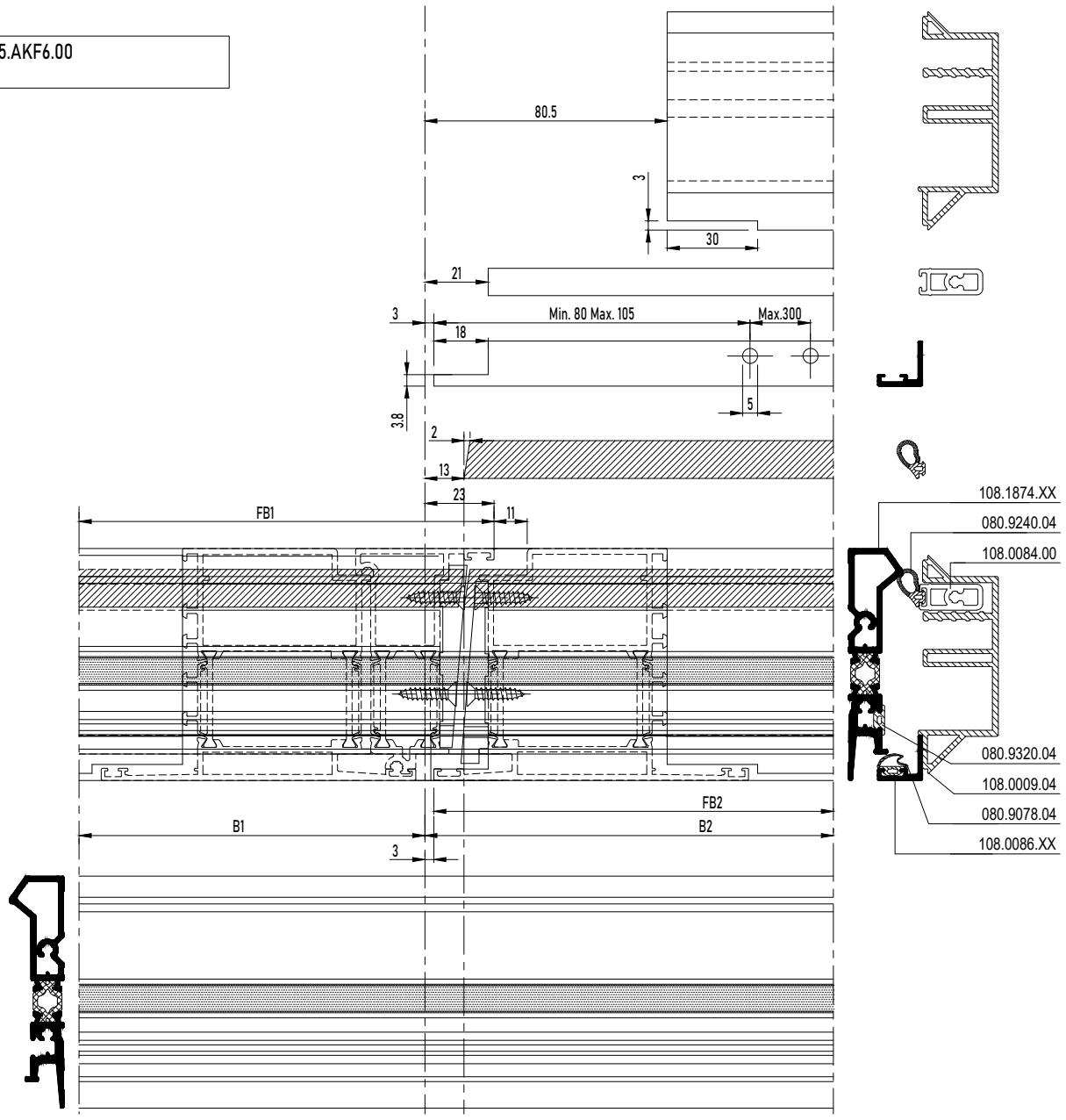

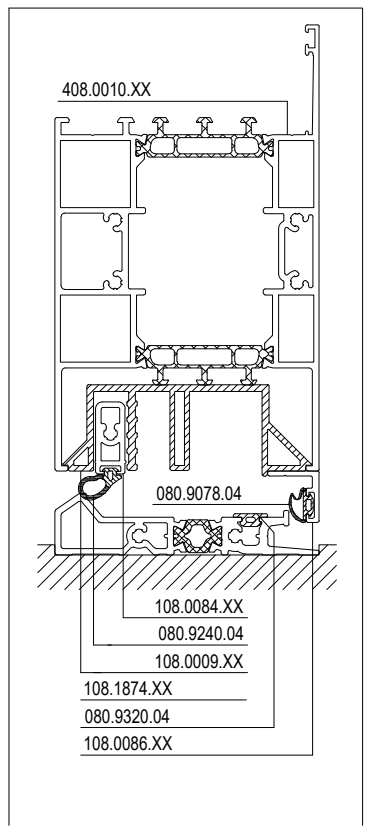

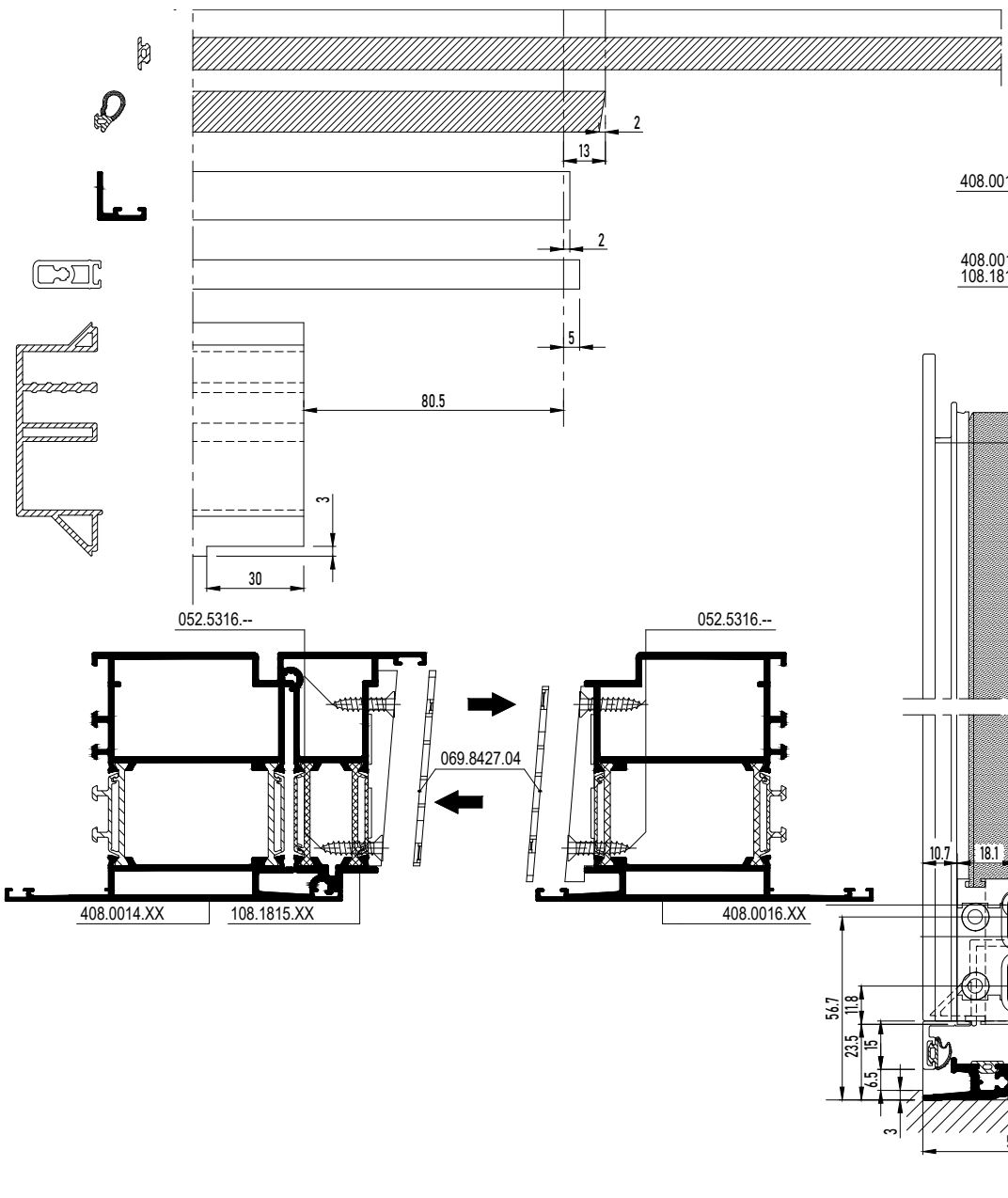

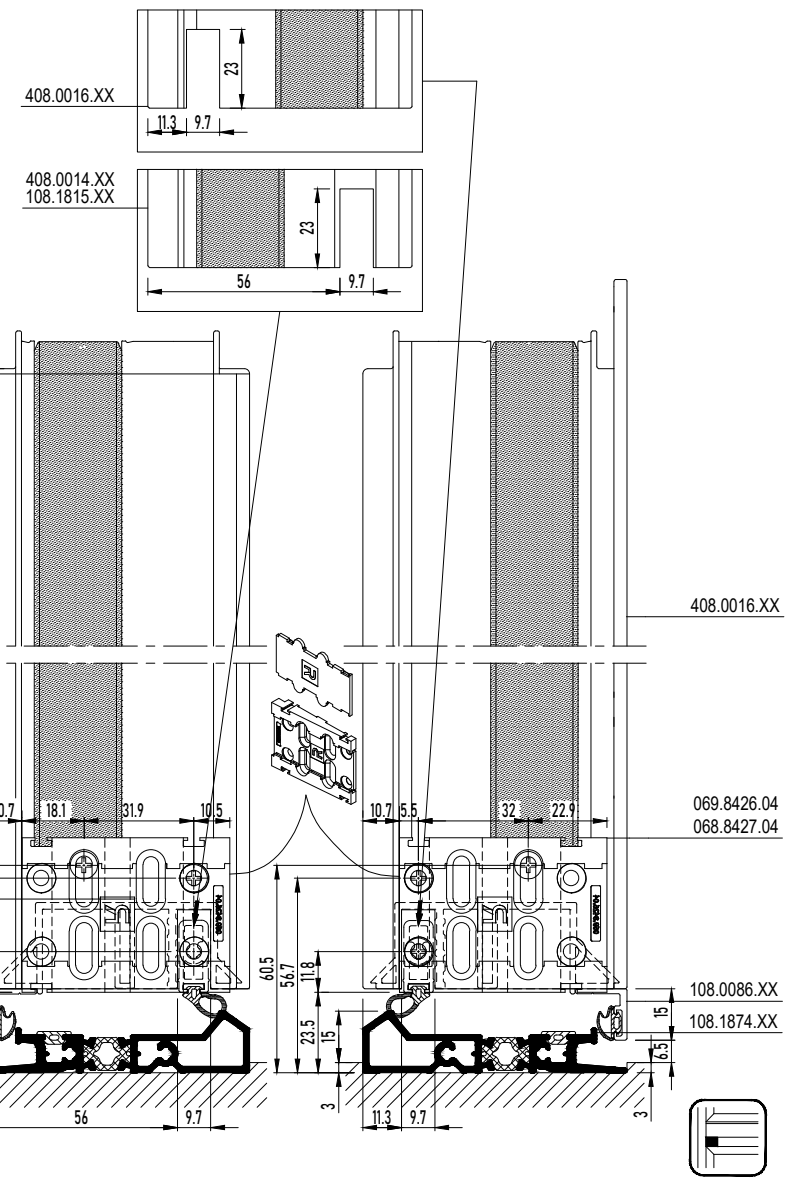

PANIC DOOR WEATHER STRIP OUTWARD OPENING

DOOR OUTW. OPENING WITH DOUBLE WEATHER STRIP - BOTTOM DOOR RAIL - DOUBLE PANIC EN179/1125

MASTERLINE 8-Fu

095.AKF6.00

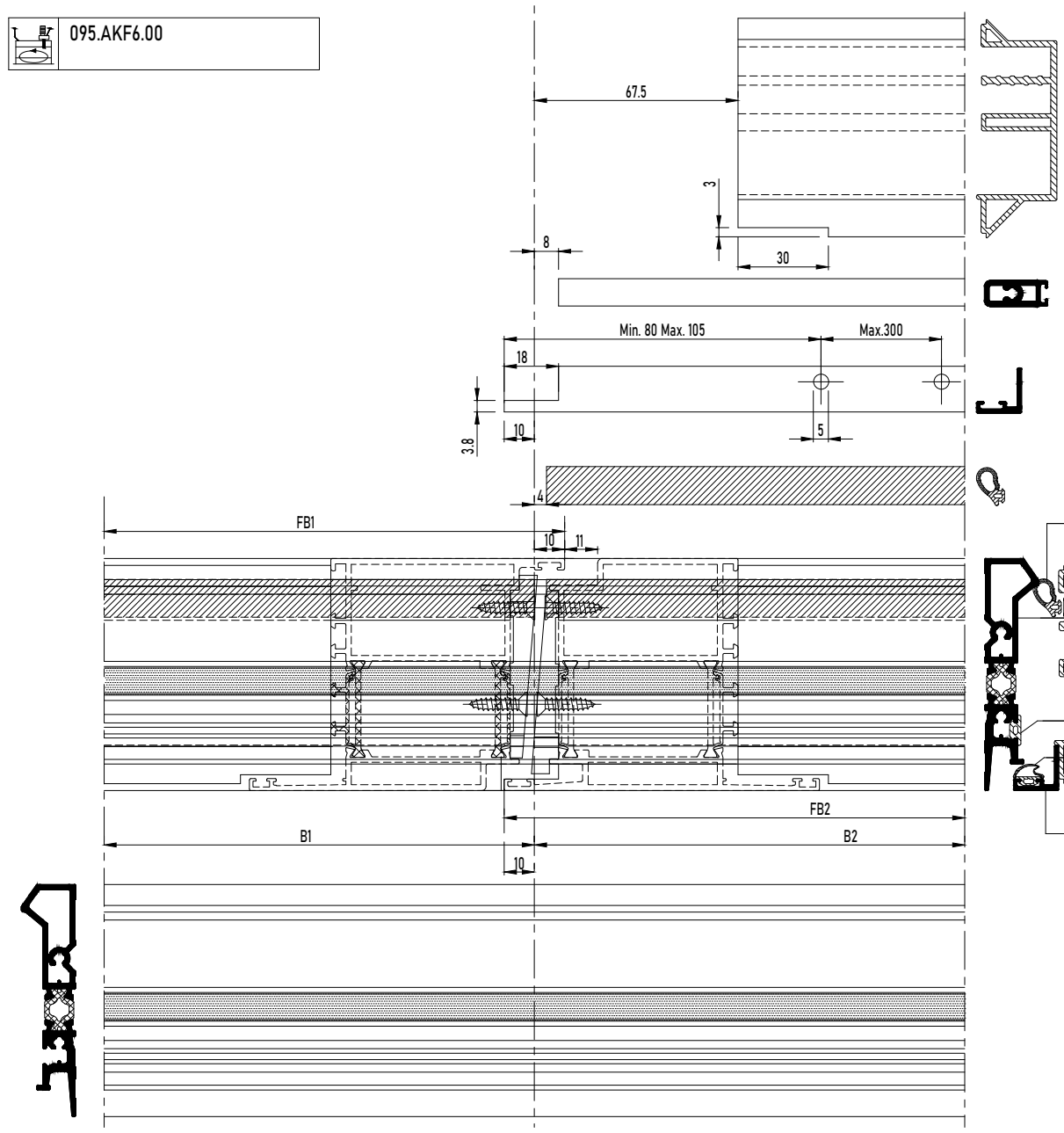

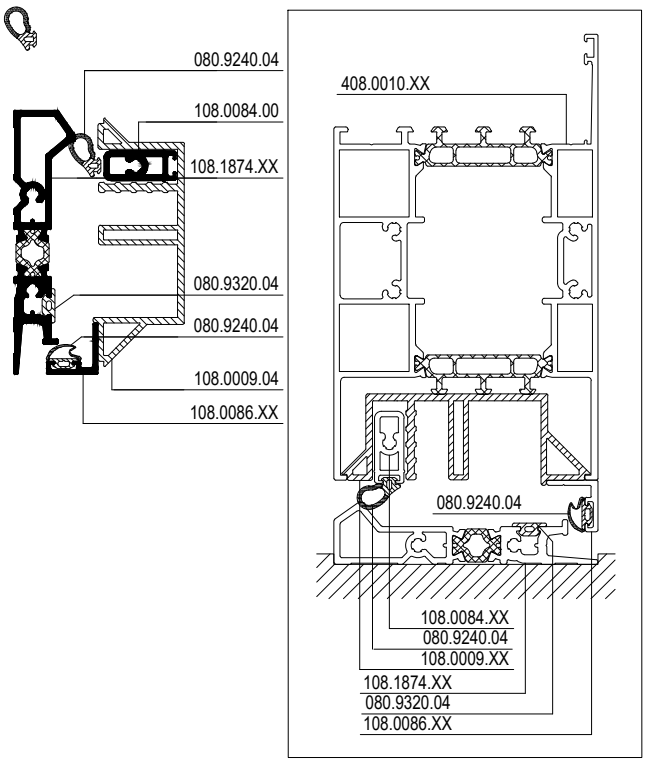

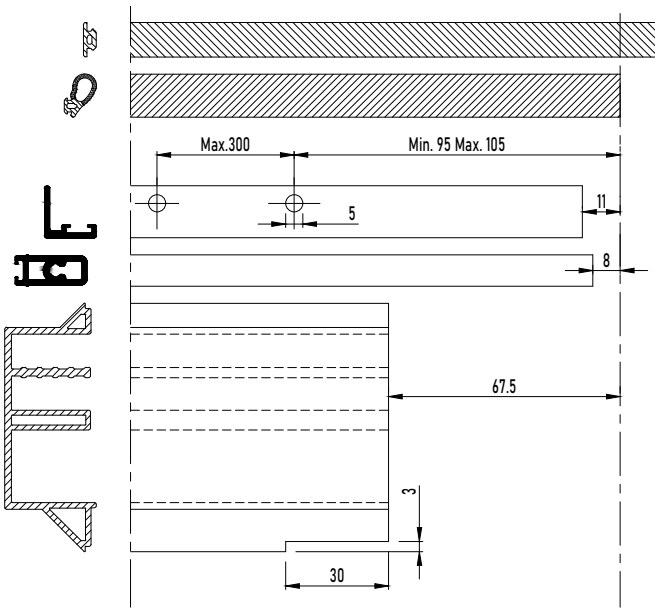

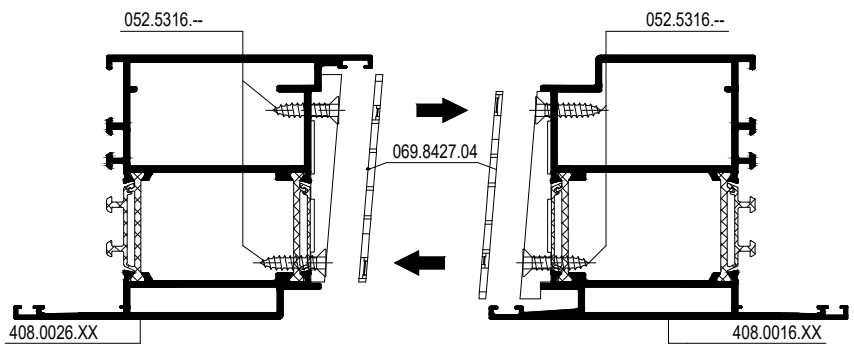

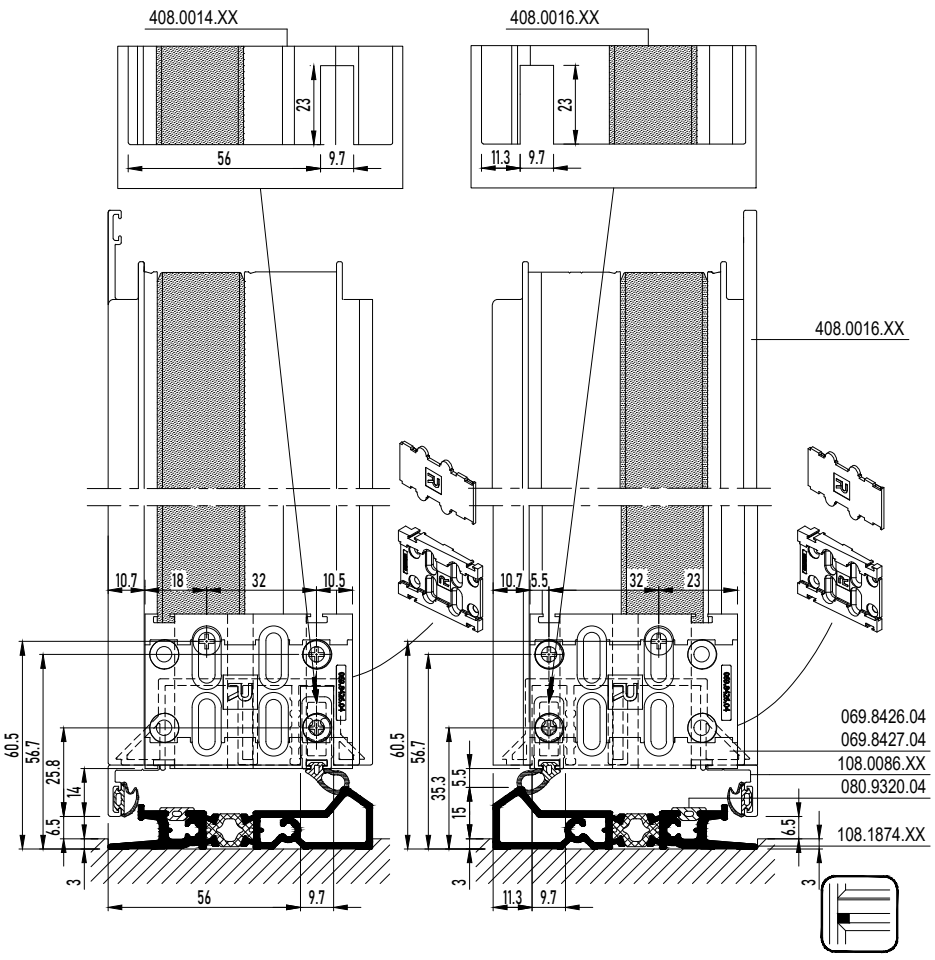

ASSEMBLY END PIECE PANIC DOOR Z-T

END PIECES Z-T PANIC DOOR

MASTERLINE 8-Fu

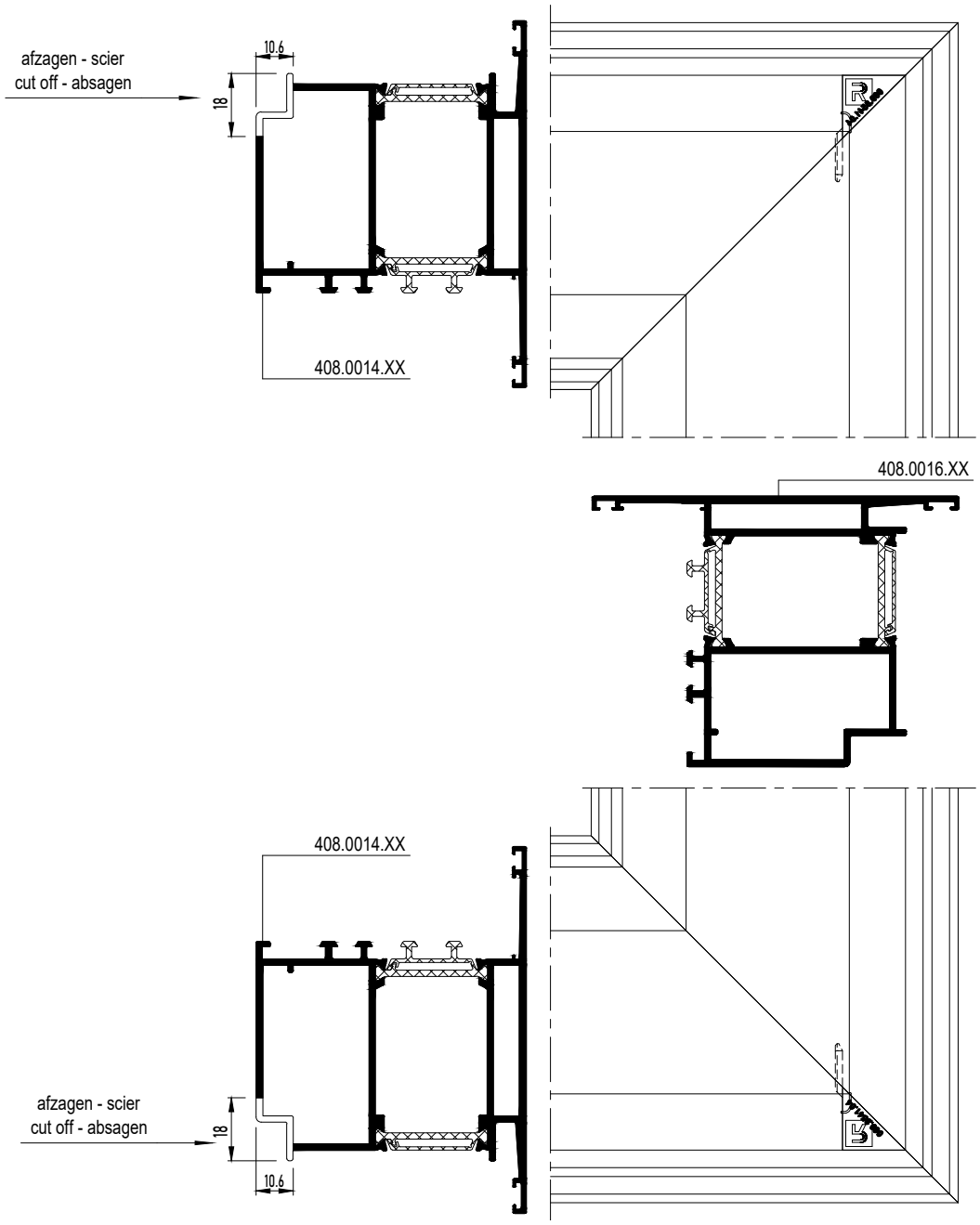

ASSEMBLY END PIECE PANIC DOOR Z-T

END PIECES Z-T PANIC DOOR

MASTERLINE 8-Fu

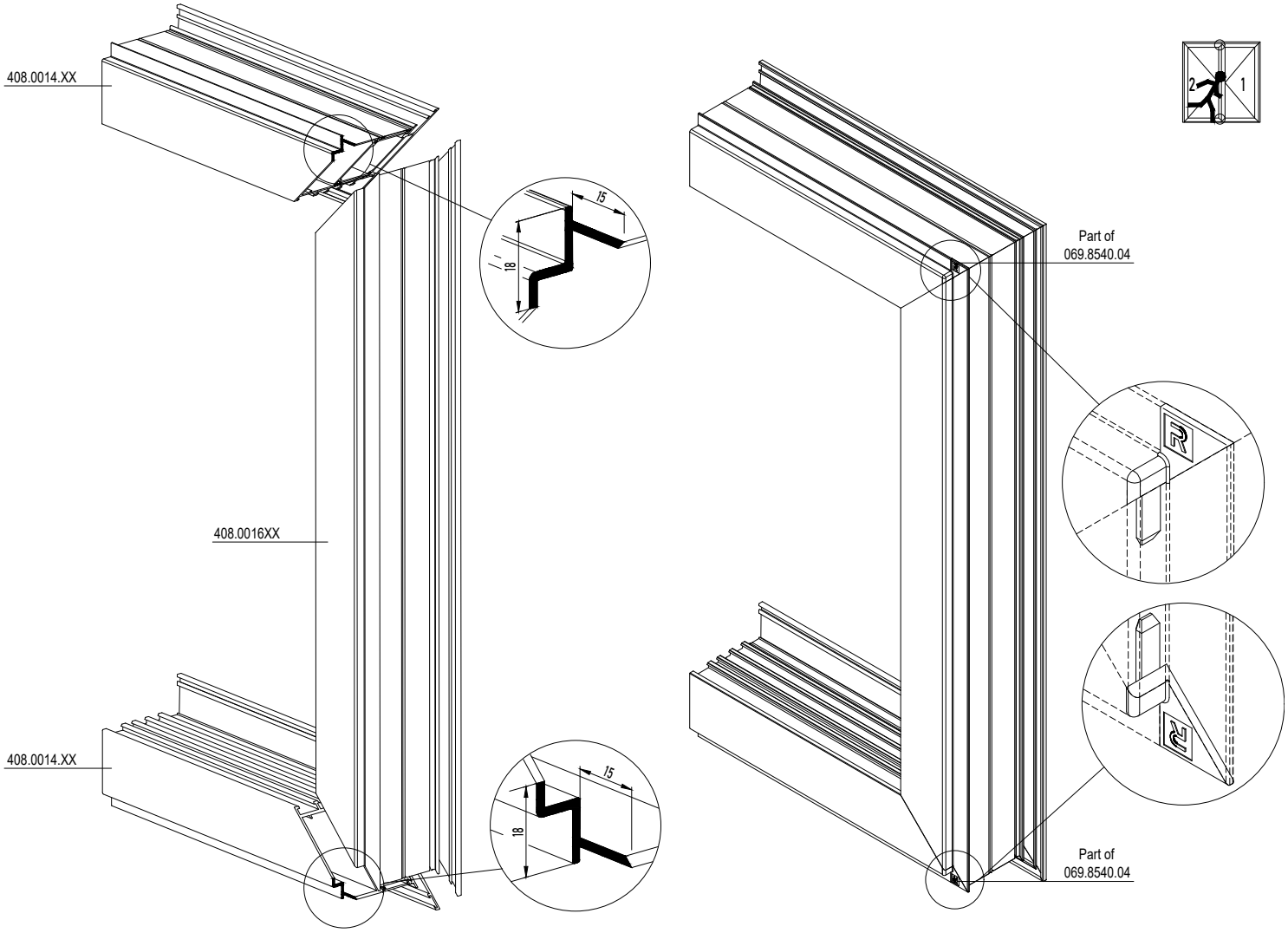

ANTI FINGER TRAP DOOR BRUSH OUTWARD OPENING

DOOR INWARD OPENING WITH BRUSH - ANTI FINGER TRAP

MASTERLINE 8-Fu

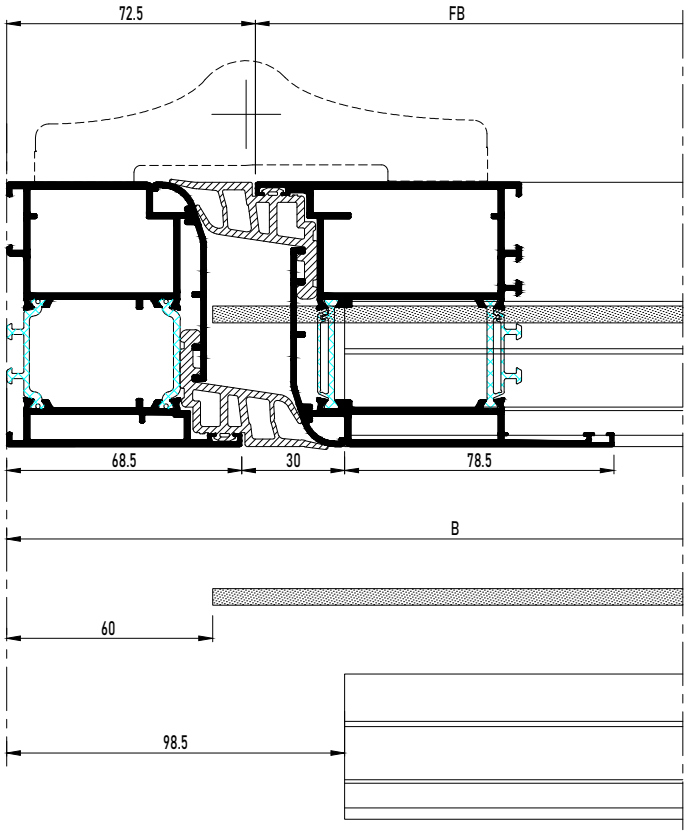

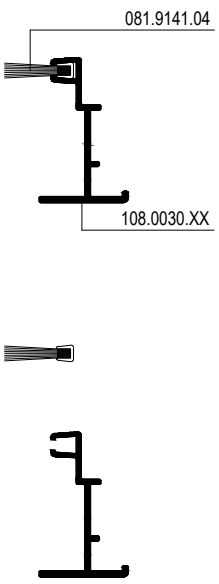

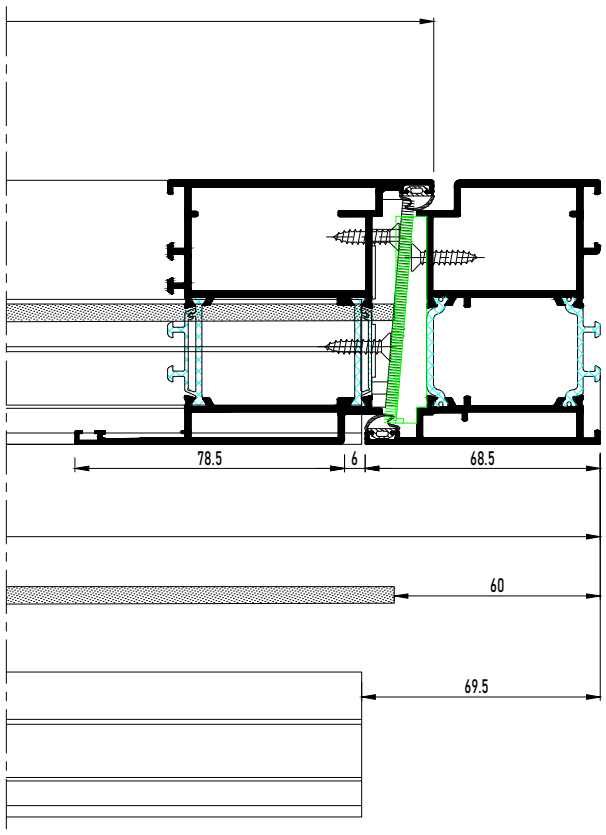

DIN R

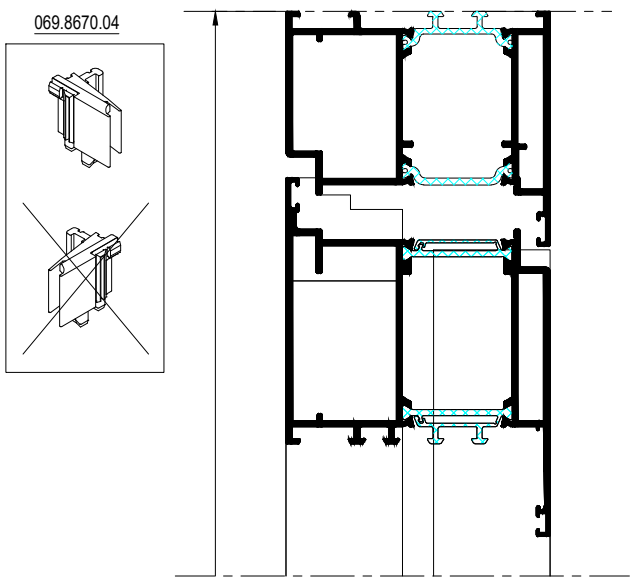

DIN L

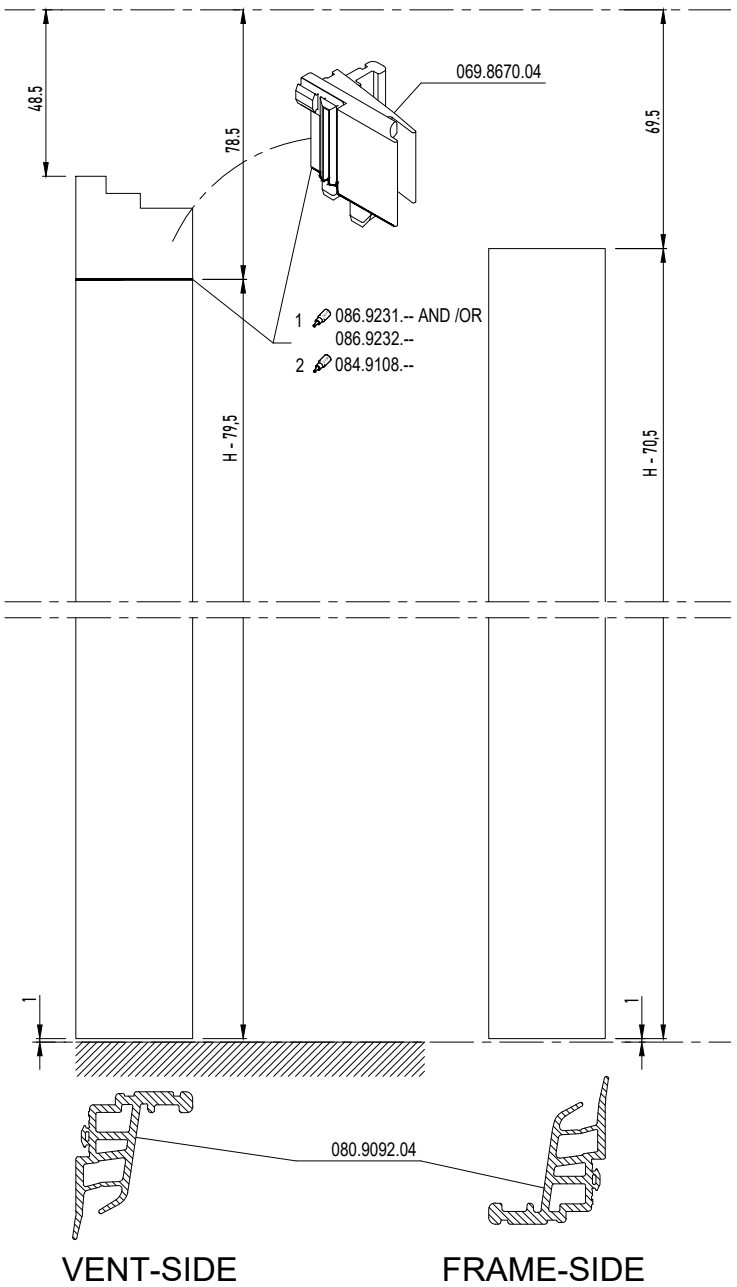

ANTI FINGER TRAP DOOR BRUSH OUTWARD OPENING

DOOR INWARD OPENING WITH BRUSH - ANTI FINGER TRAP

MASTERLINE 8-Fu

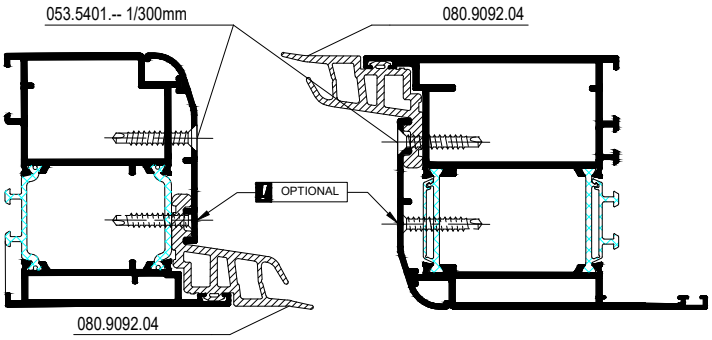

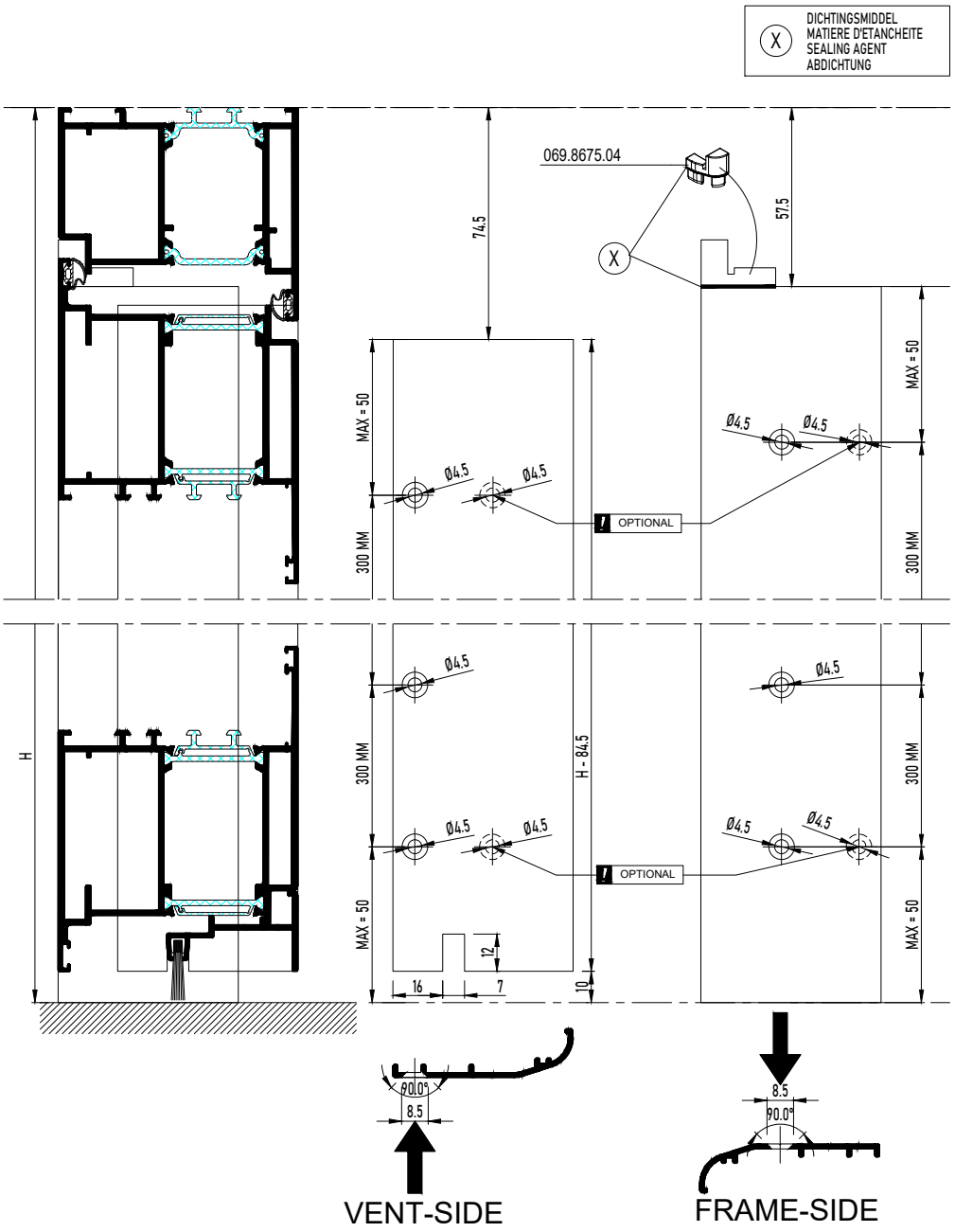

ANTI FINGER TRAP DOOR BRUSH OUTWARD OPENING

DOOR OUTWARD OPENING WITH BRUSH - ANTI FINGER TRAP

MASTERLINE 8-Fu

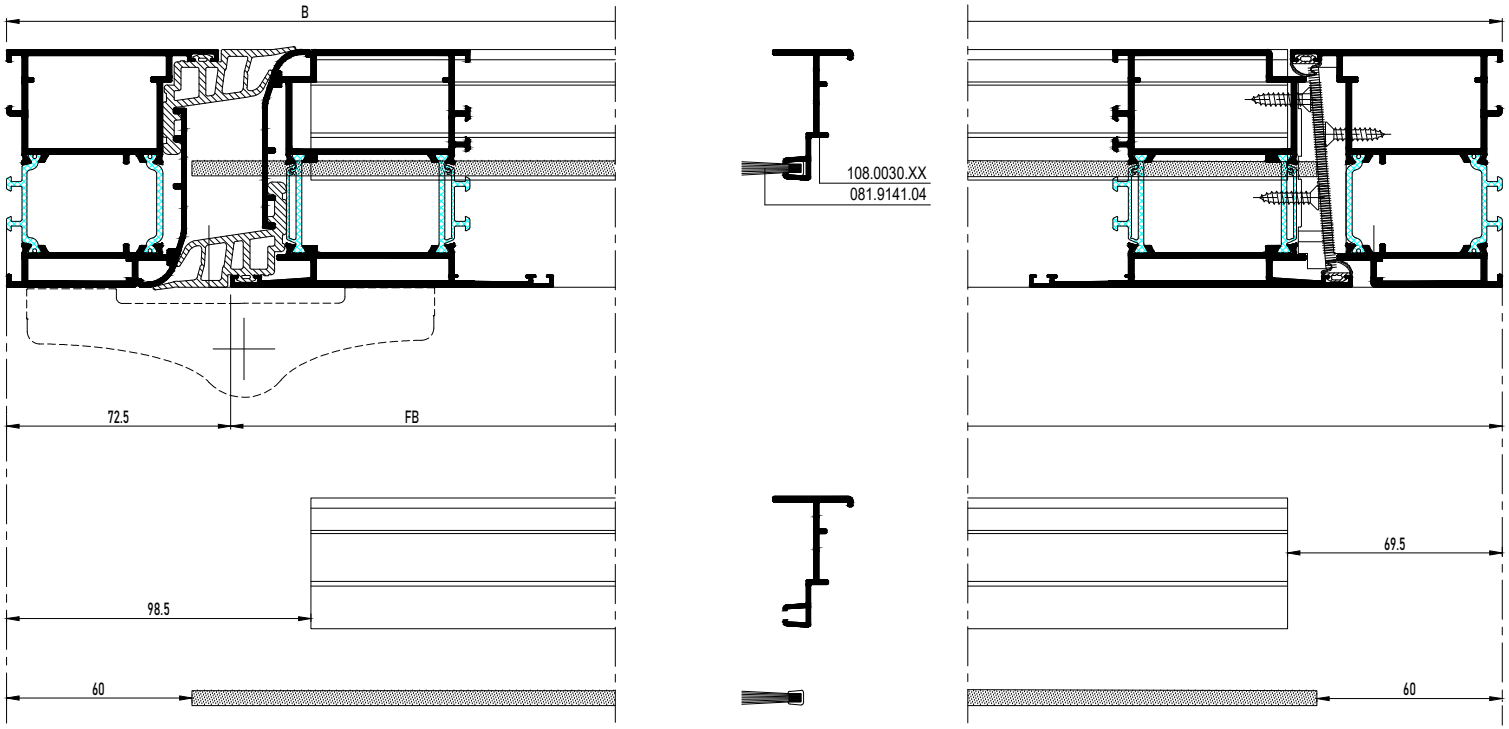

ANTI FINGER TRAP DOOR BRUSH OUTWARD OPENING

DOOR OUTWARD OPENING WITH BRUSH - ANTI FINGER TRAP

MASTERLINE 8-Fu

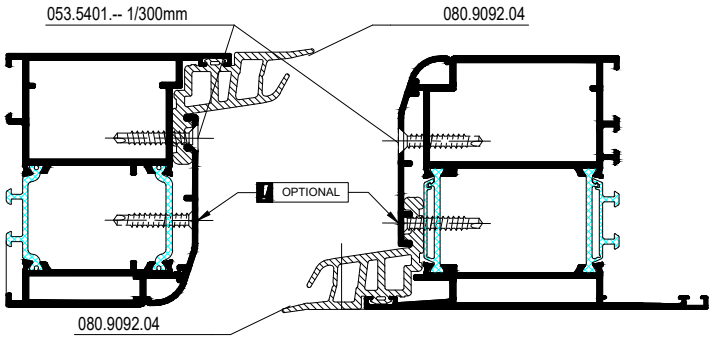

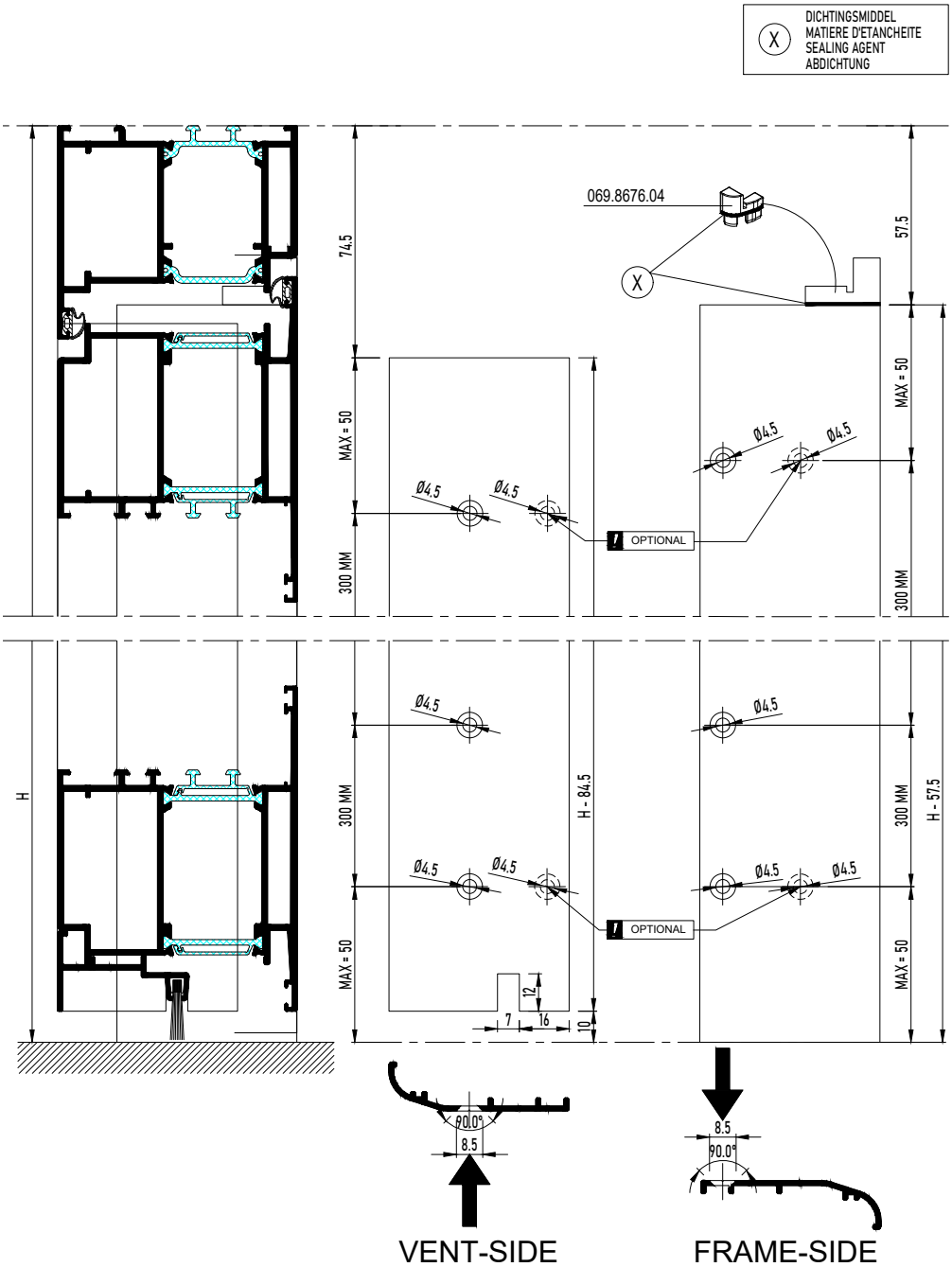

ANTI FINGER TRAP DOOR BRUSH OUTWARD OPENING

DOOR OUTWARD OPENING WITH BRUSH - ANTI FINGER TRAP

MASTERLINE 8-Fu

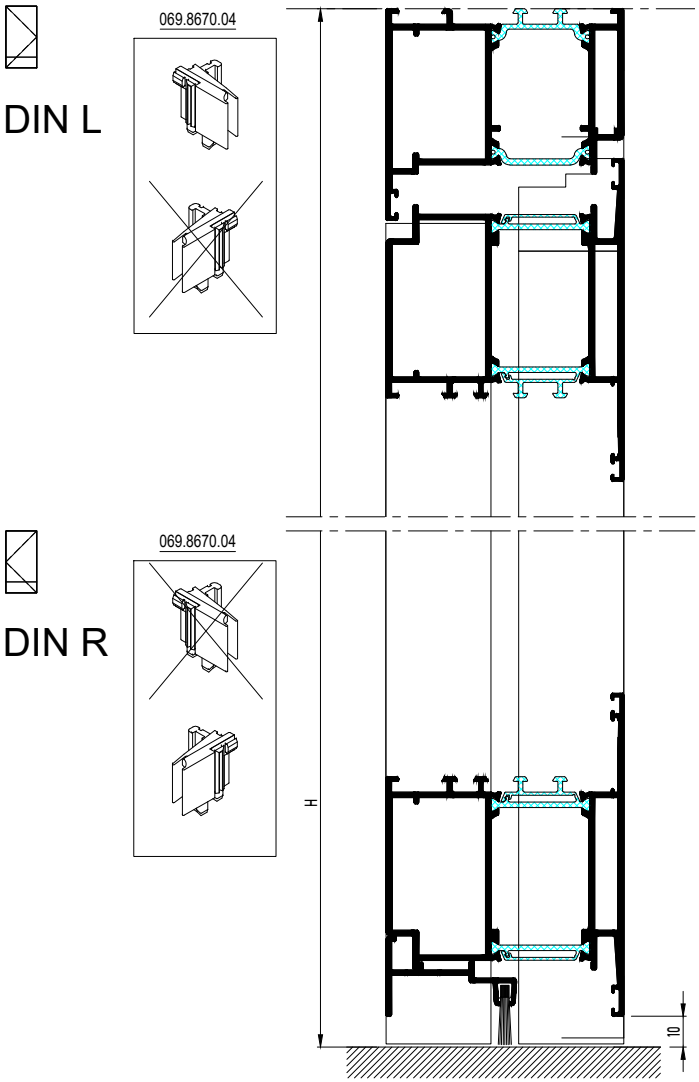

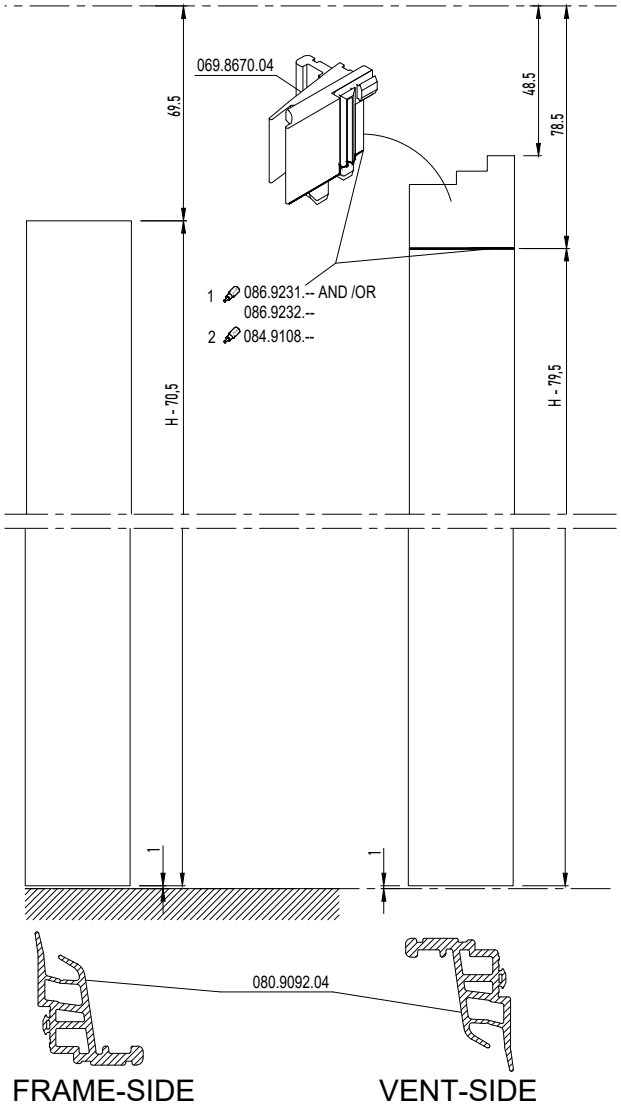

ANTI FINGER DOOR WEATHER STRIP INWARD OPENING

DOOR INWARD OPENING WITH DOUBLE WEATHER STRIP - ANTI FINGER TRAP

MASTERLINE 8-Fu

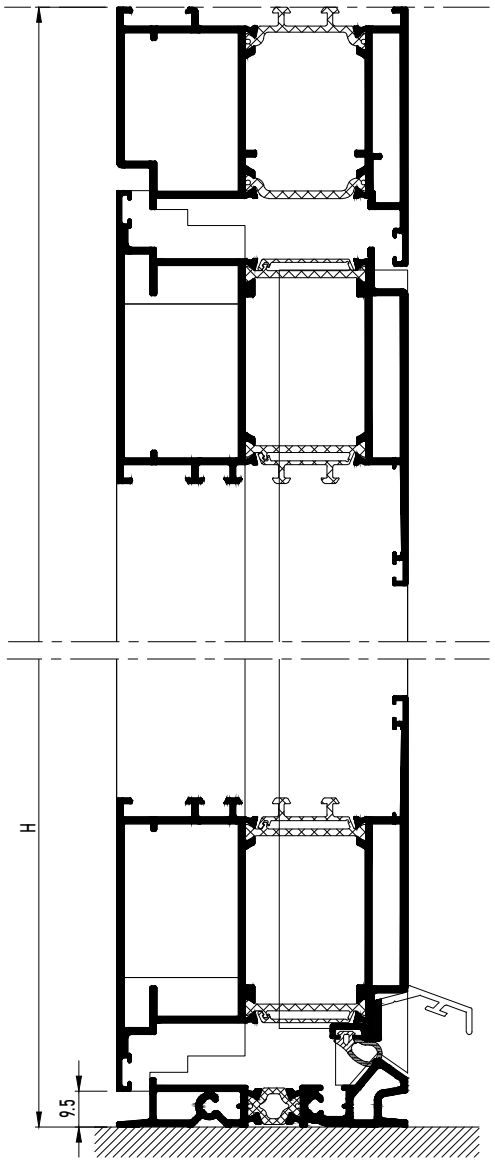

ANTI FINGER DOOR WEATHER STRIP INWARD OPENING

DOOR INWARD OPENING WITH DOUBLE WEATHER STRIP - ANTI FINGER TRAP

MASTERLINE 8-Fu

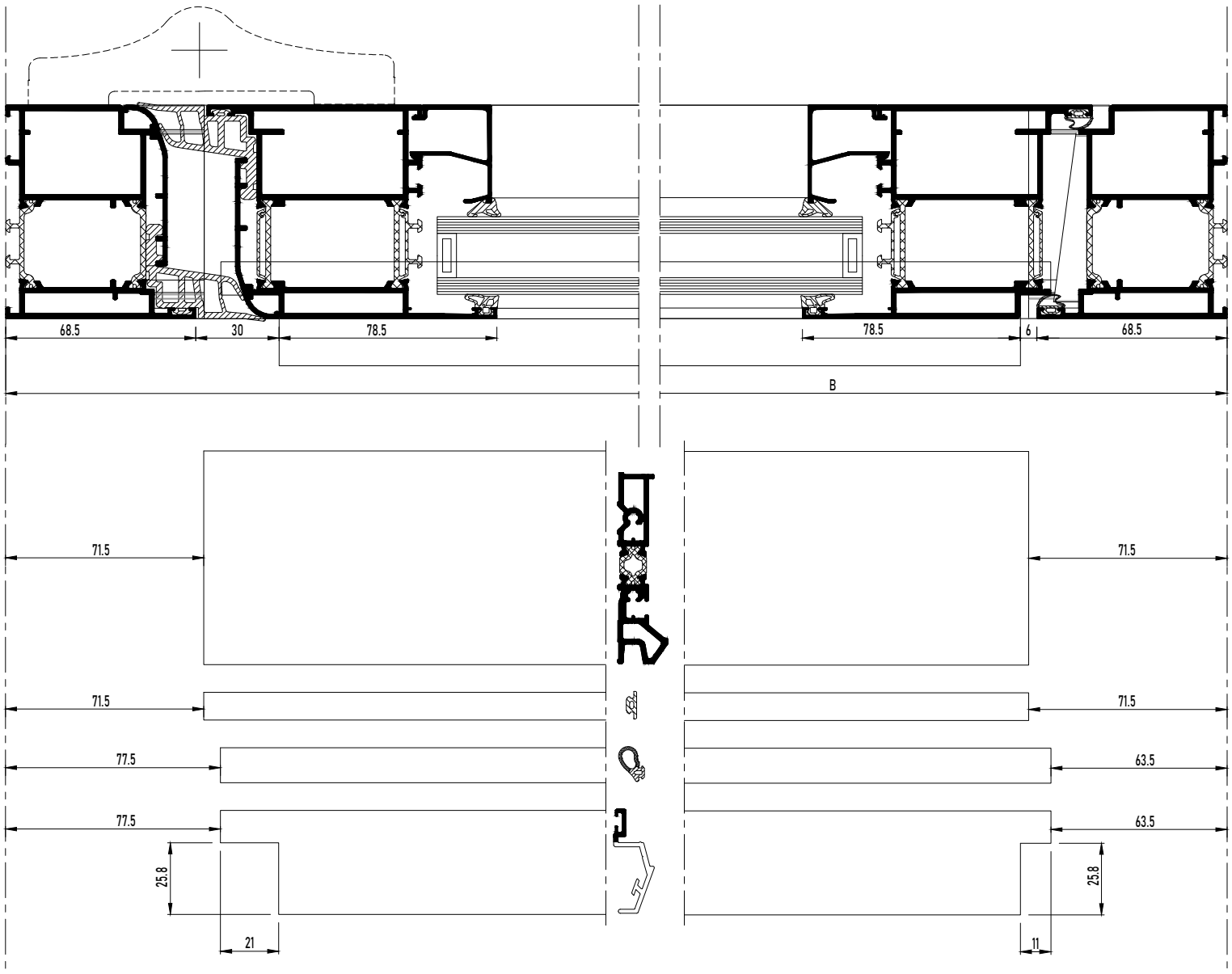

095.AKF6.00 or 095.D300.00

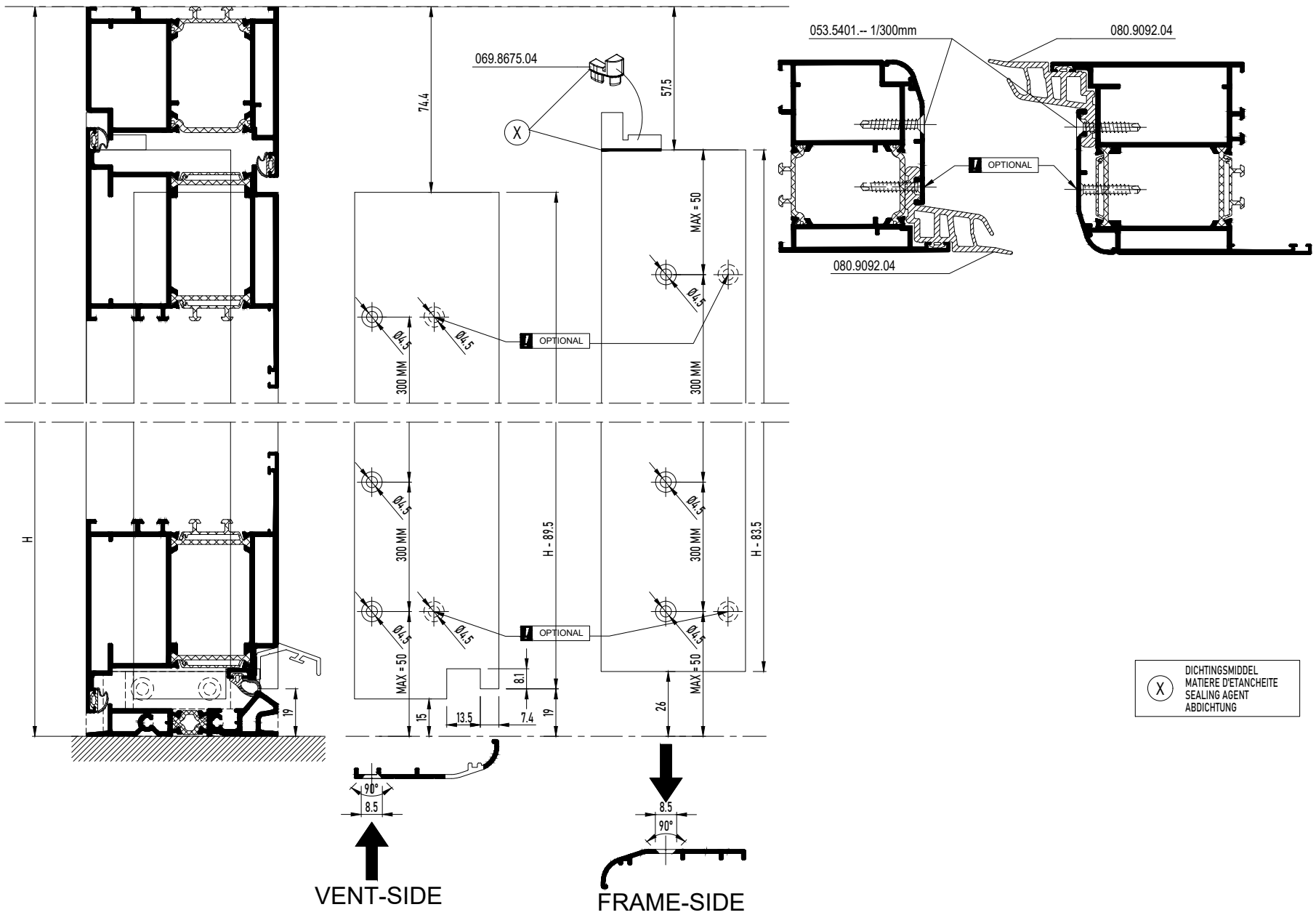

X DICHTINGSMIDDEL
MATIERE D'ETANCHEITE
SEALING AGENT
ABDICHTUNG

ANTI FINGER DOOR WEATHER STRIP INWARD OPENING

DOOR INWARD OPENING WITH DOUBLE WEATHER STRIP - ANTI FINGER TRAP

MASTERLINE 8-Fu

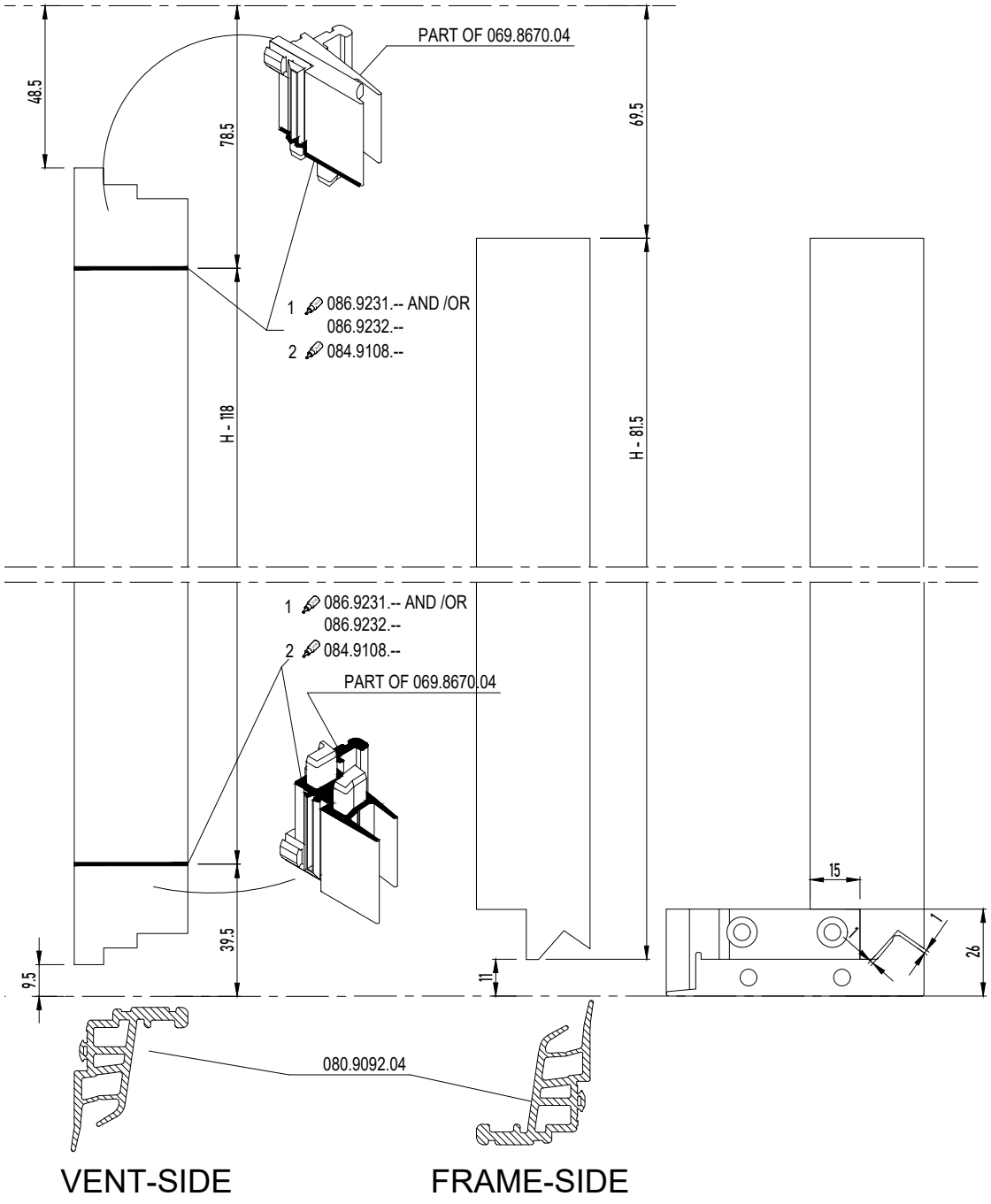

MILLING PROFILE ANTI FINGER TRAP DOOR

DOOR INWARD OPENING WITH DOUBLE WEATHER STRIP - ANTI FINGER TRAP

MASTERLINE 8-Fu

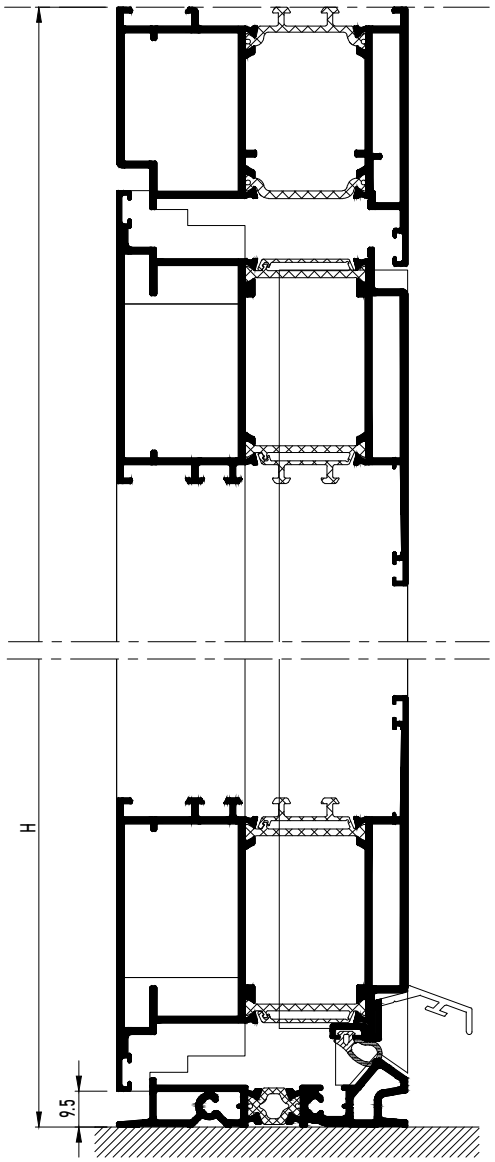

MILLING PROFILE ANTI FINGER TRAP DOOR

DOOR INWARD OPENING WITH DOUBLE WEATHER STRIP - ANTI FINGER TRAP

MASTERLINE 8-Fu

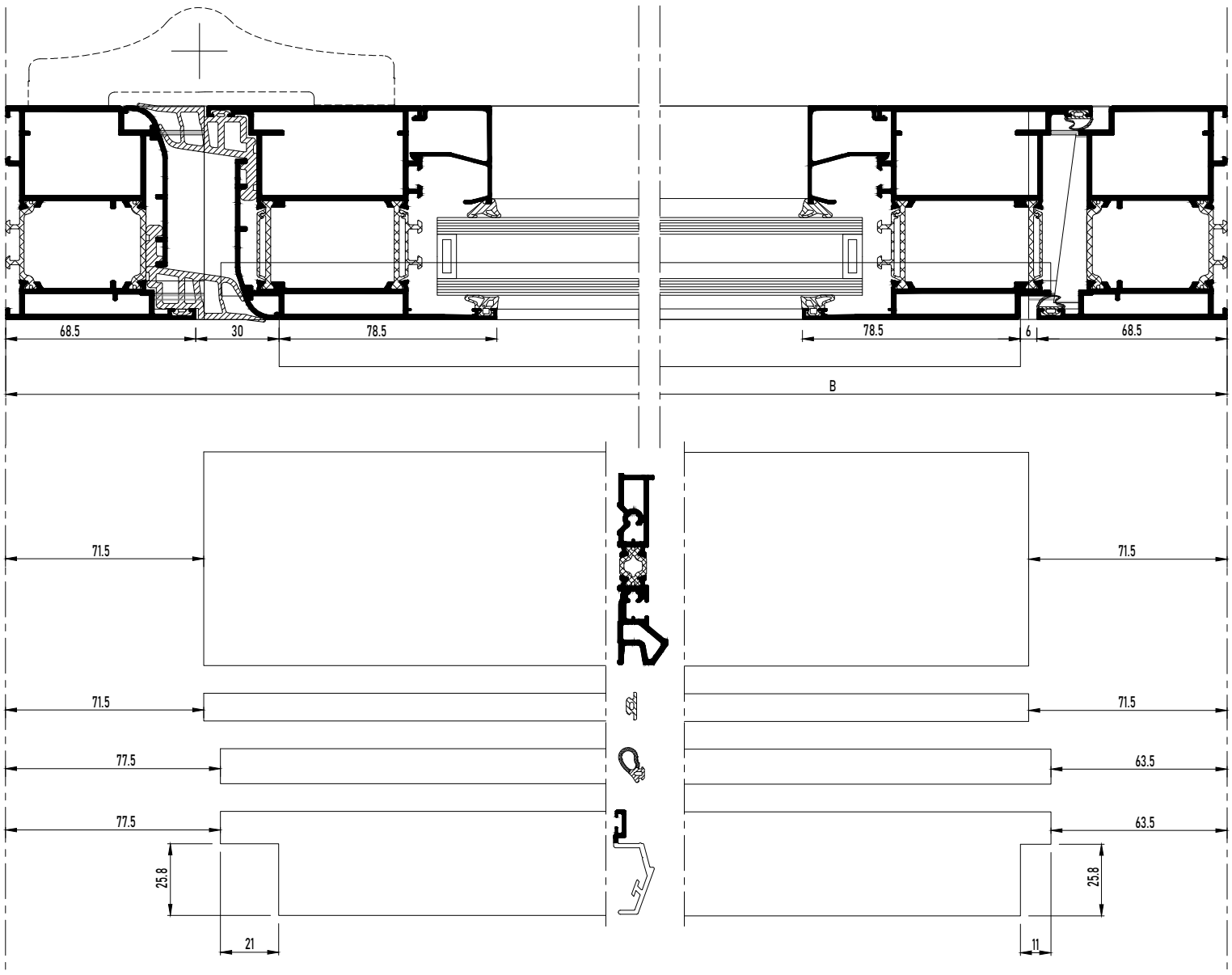

095.AKF6.00 or 095.D300.00

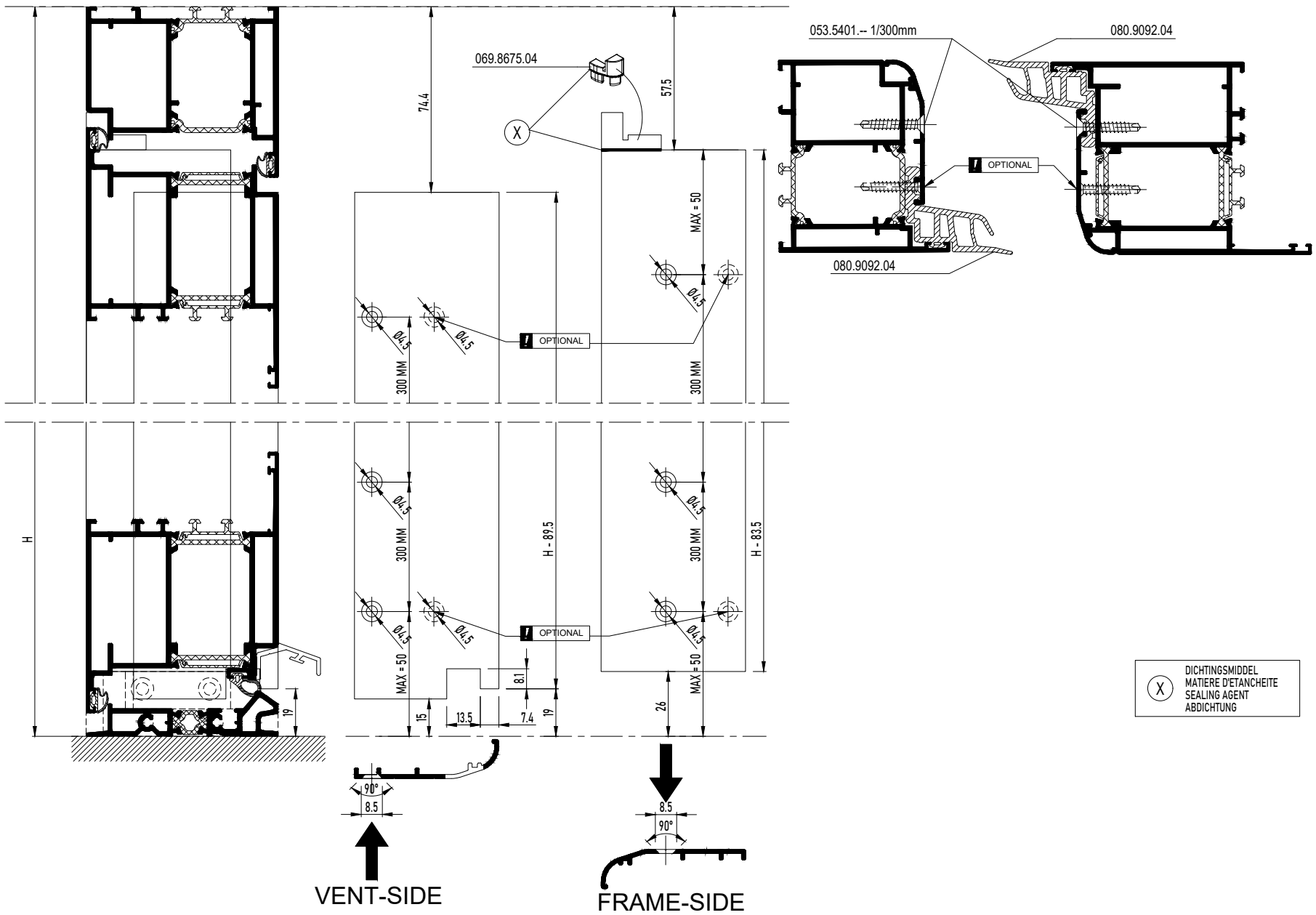

X DICHTINGSMIDDEL
MATIERE D'ETANCHEITE
SEALING AGENT
ABDICHTUNG

MILLING PROFILE ANTI FINGER TRAP DOOR

DOOR INWARD OPENING WITH DOUBLE WEATHER STRIP - ANTI FINGER TRAP

MASTERLINE 8-Fu

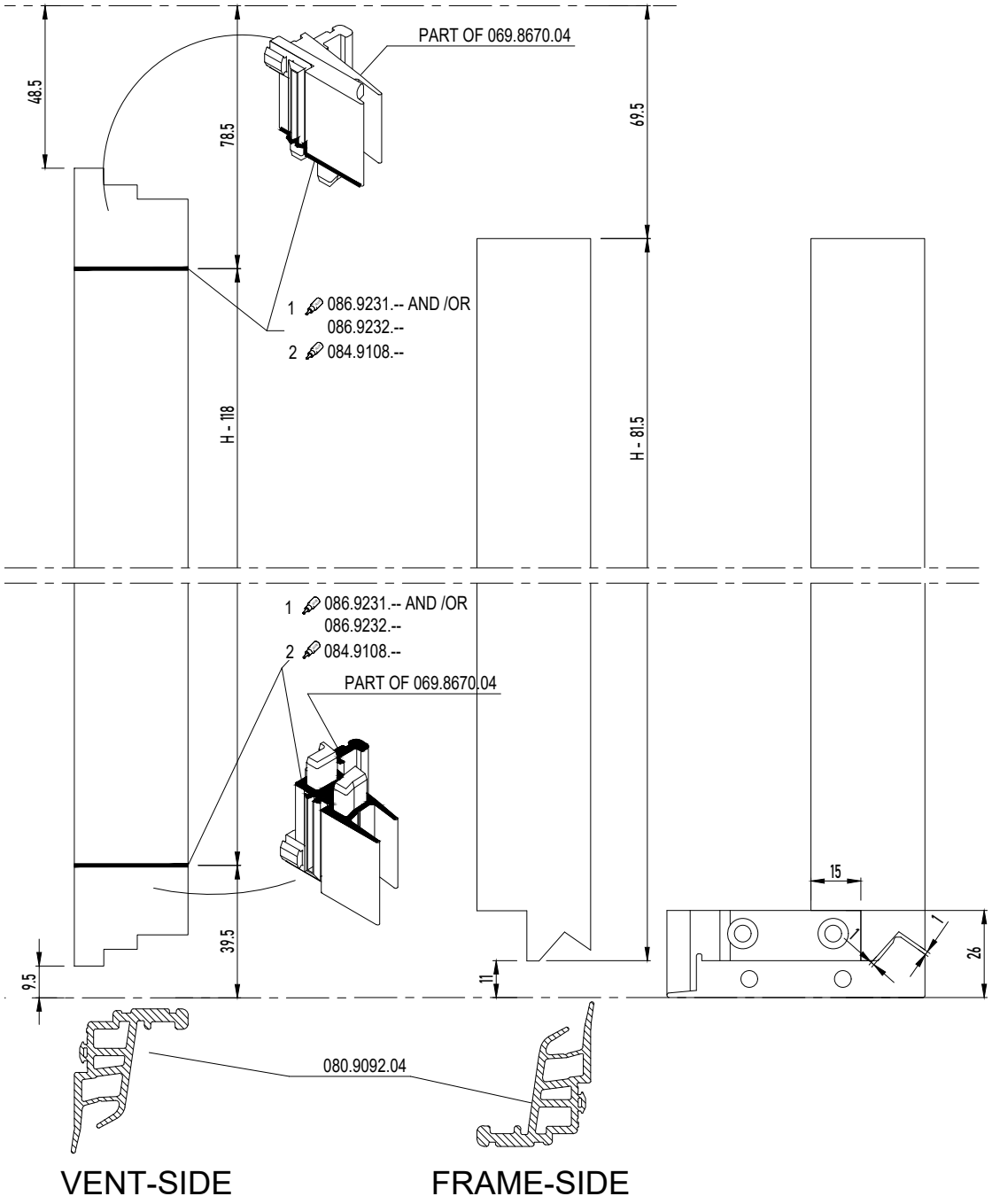

MILLING PROFILE ANTI FINGER TRAP DOOR

DOOR INWARD OPENING WITH DOUBLE WEATHER STRIP - ANTI FINGER TRAP

MASTERLINE 8-Fu

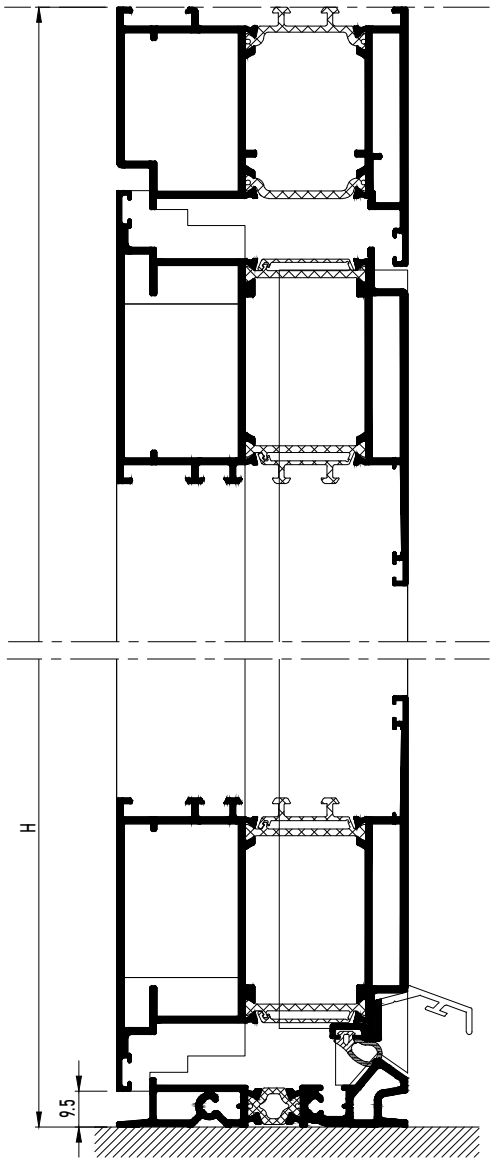

MILLING PROFILE ANTI FINGER TRAP DOOR

DOOR INWARD OPENING WITH DOUBLE WEATHER STRIP - ANTI FINGER TRAP

MASTERLINE 8-Fu

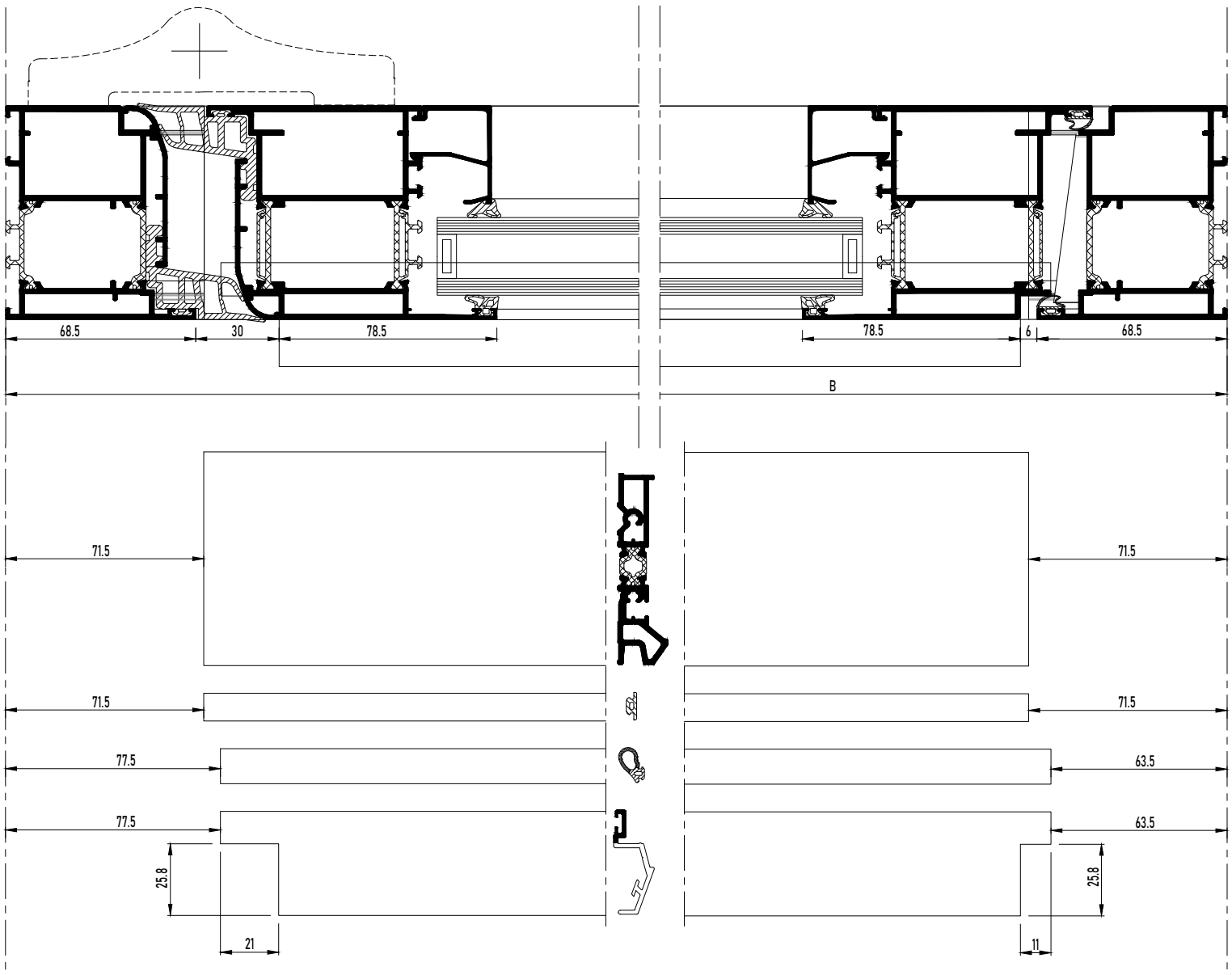

095.AKF6.00 or 095.D300.00

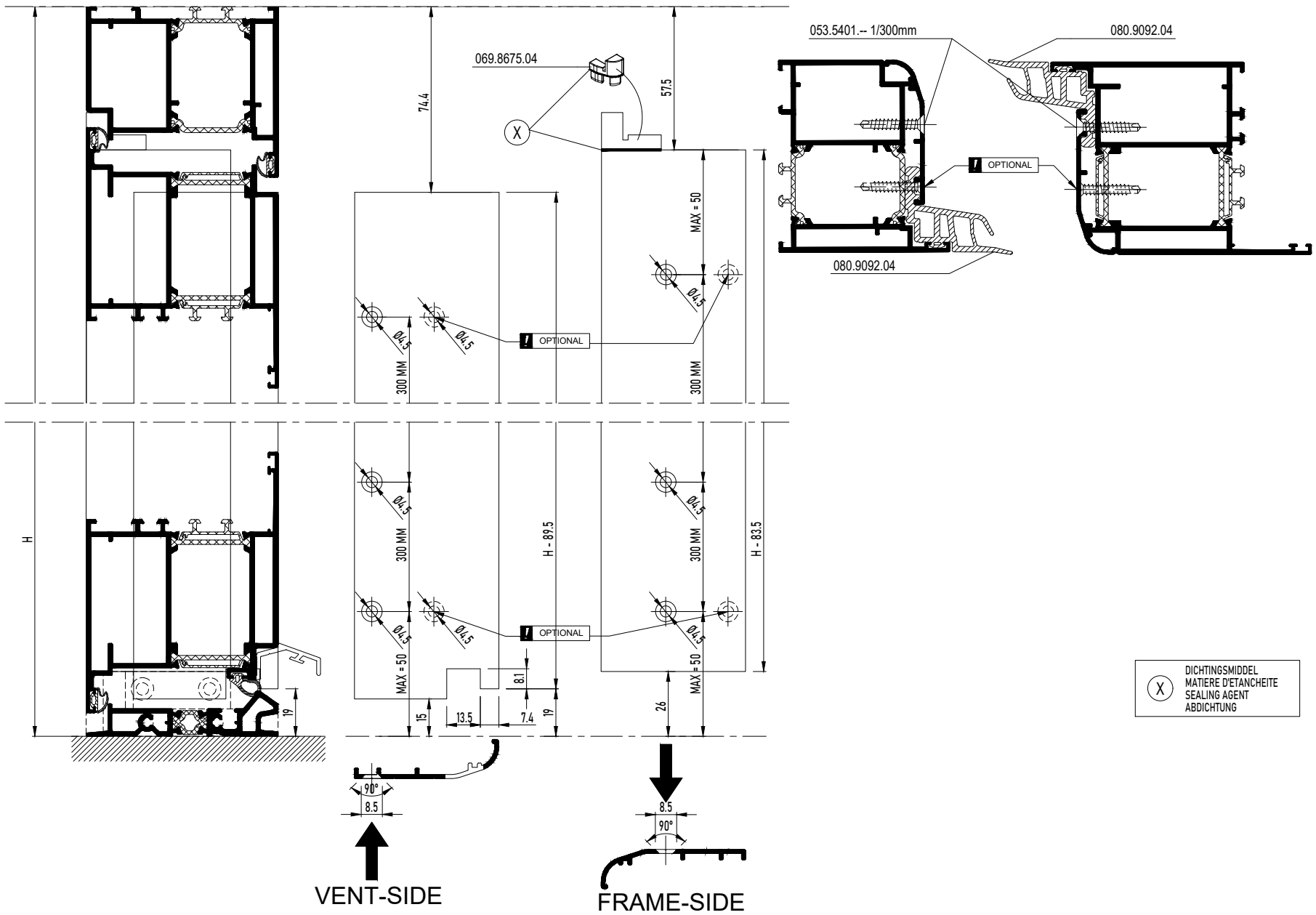

X DICHTINGSMIDDEL
MATIERE D'ETANCHEITE
SEALING AGENT
ABDICHTUNG

MILLING PROFILE ANTI FINGER TRAP DOOR

DOOR INWARD OPENING WITH DOUBLE WEATHER STRIP - ANTI FINGER TRAP

MASTERLINE 8-Fu

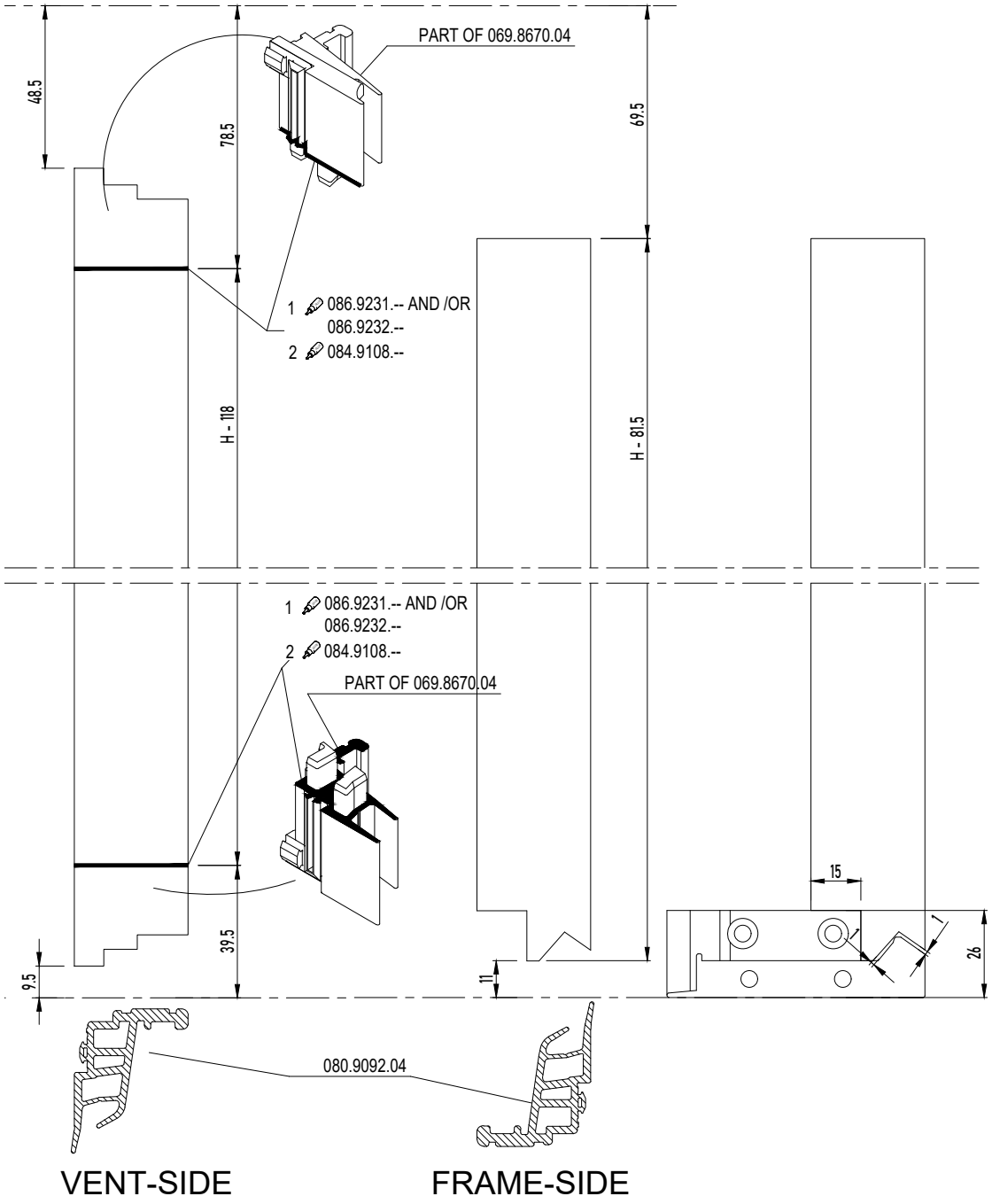

ANTI FINGER TRAP DOOR WEATHER STRIP OUTWARD OPENING

DOOR OUTWARD OPENING WITH DOUBLE WEATHER STRIP - ANTI FINGER TRAP

MASTERLINE 8-Fu

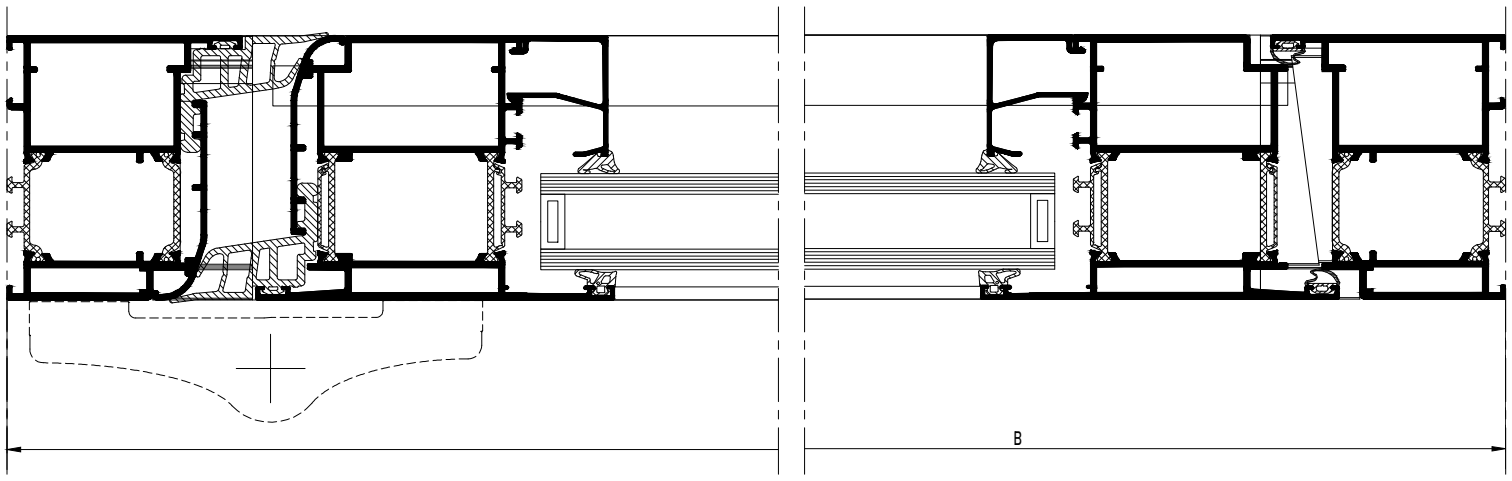

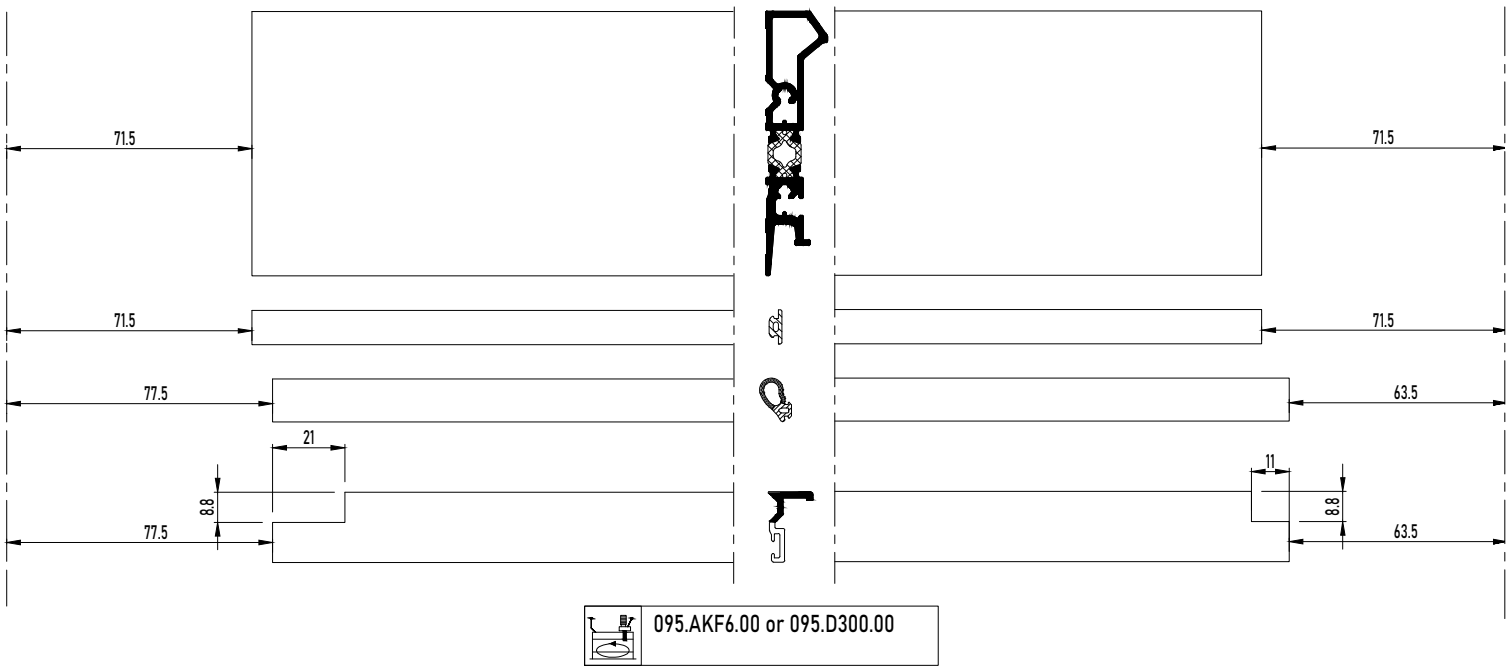

095.AKF6.00 or 095.D300.00

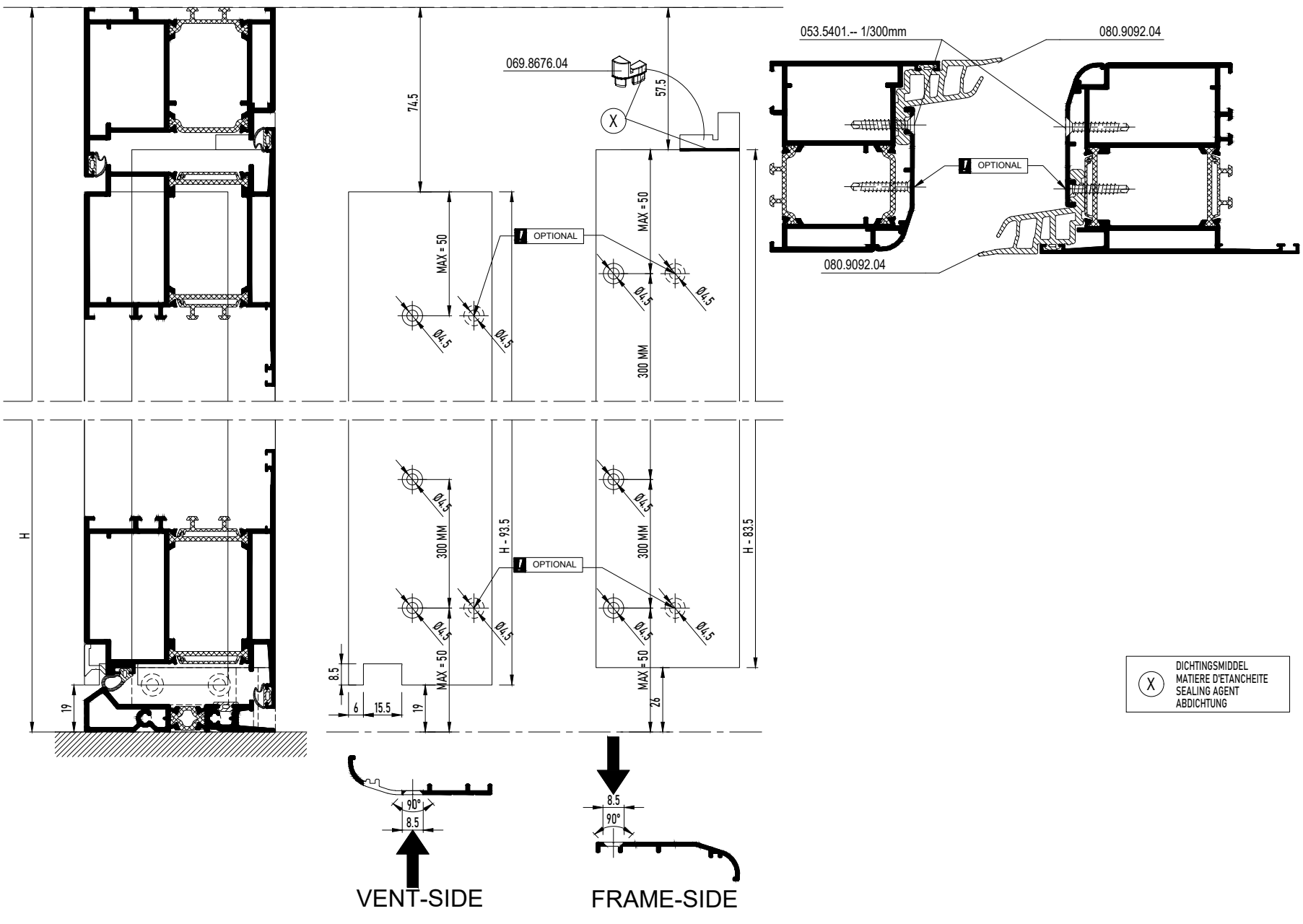

X DICHTINGSMIDDEL
MATIERE D'ETANCHEITE
SEALING AGENT
ABDICHTUNG

ANTI FINGER TRAP DOOR WEATHER STRIP OUTWARD OPENING

DOOR OUTWARD OPENING WITH DOUBLE WEATHER STRIP - ANTI FINGER TRAP

MASTERLINE 8-Fu

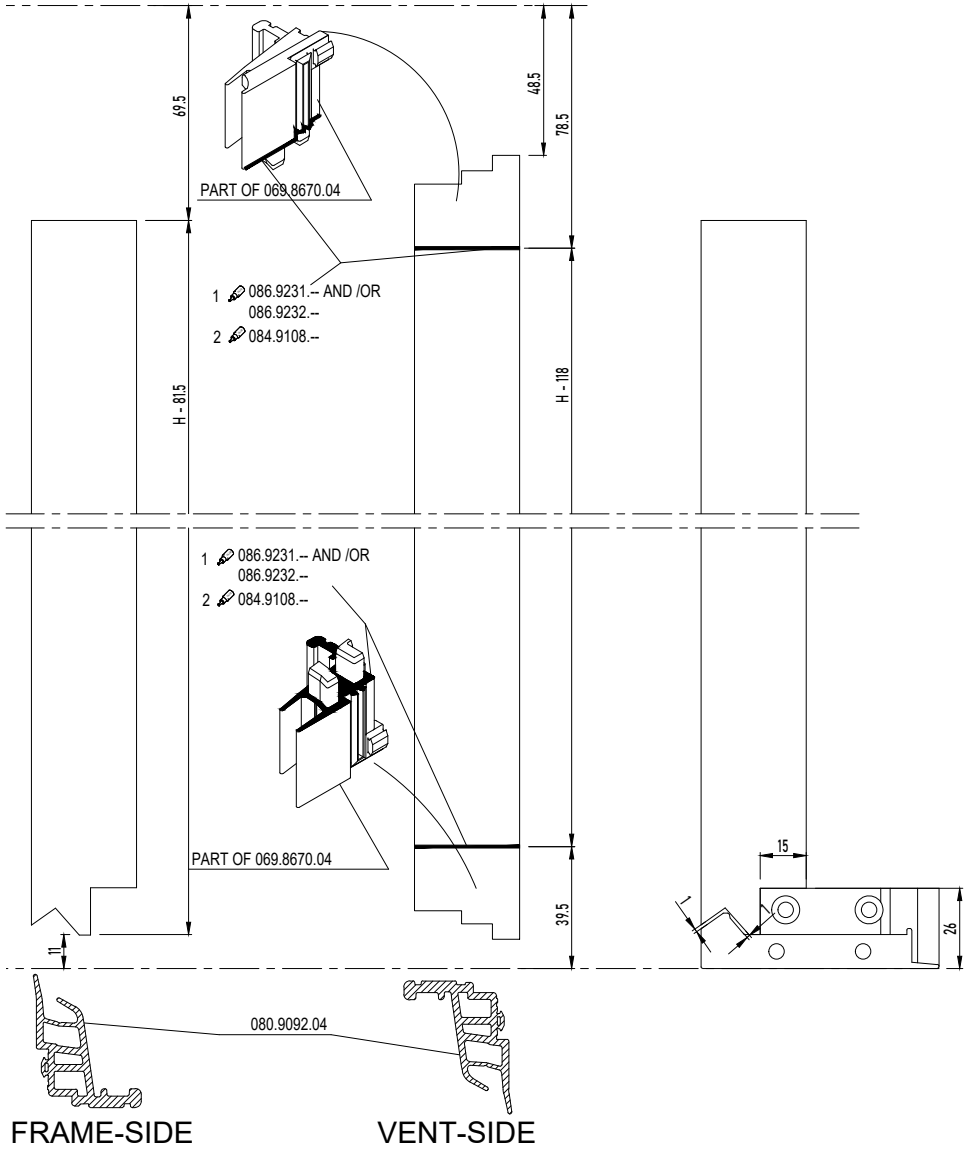

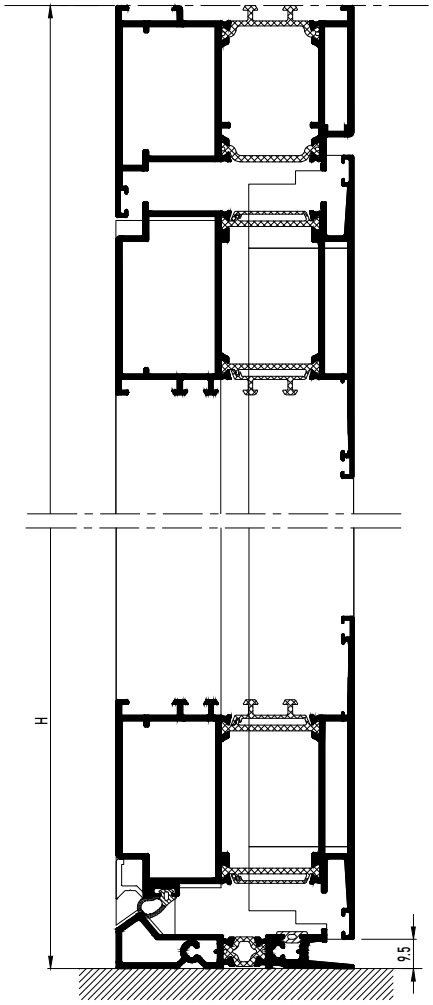

ANTI FINGER TRAP DOOR WEATHER STRIP OUTWARD OPENING

DOOR OUTWARD OPENING WITH DOUBLE WEATHER STRIP - ANTI FINGER TRAP

MASTERLINE 8-Fu

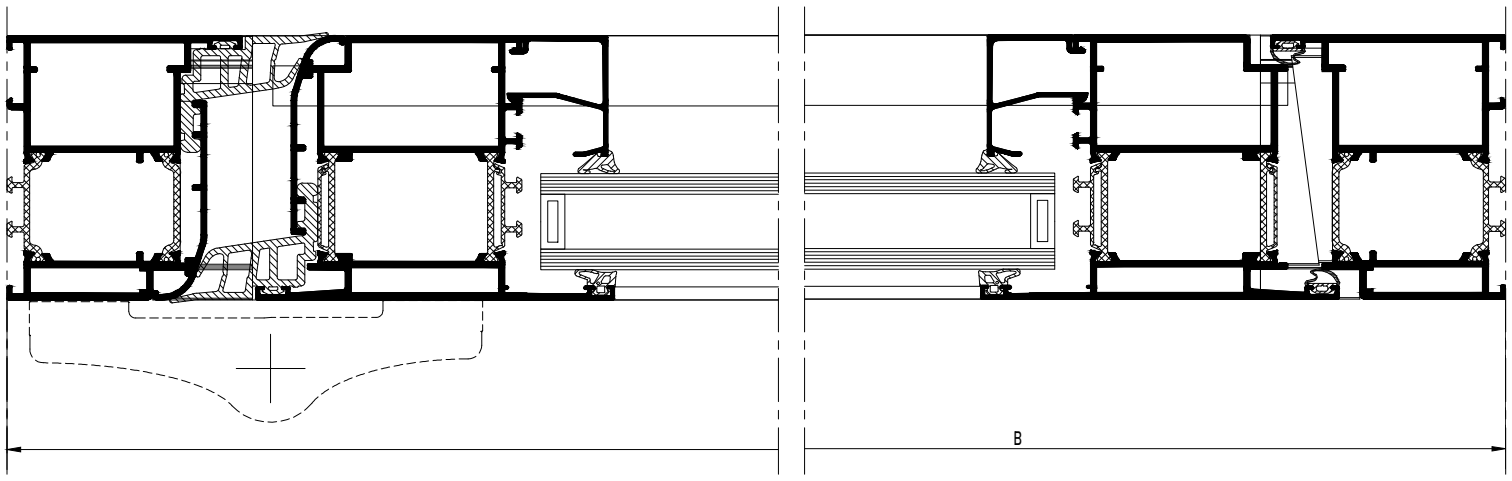

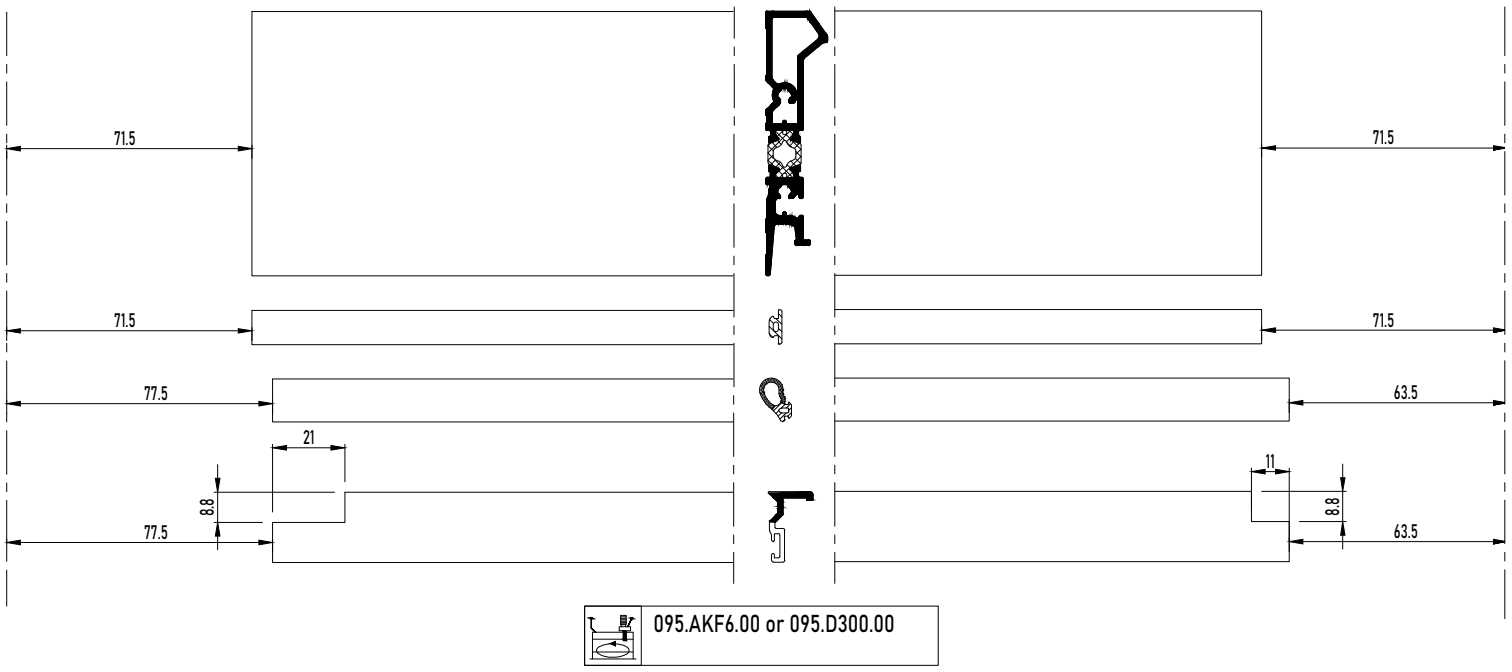

095.AKF6.00 or 095.D300.00

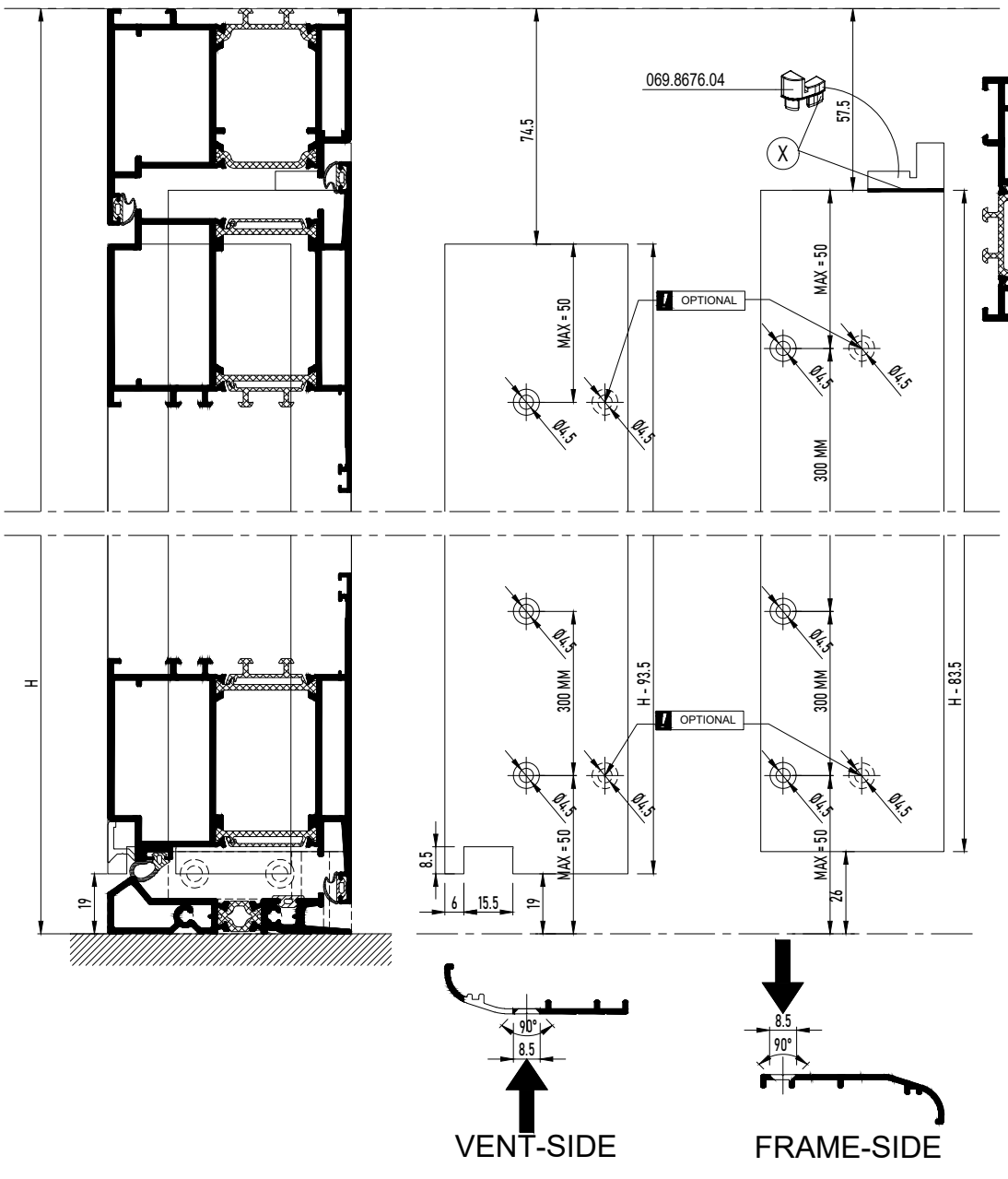

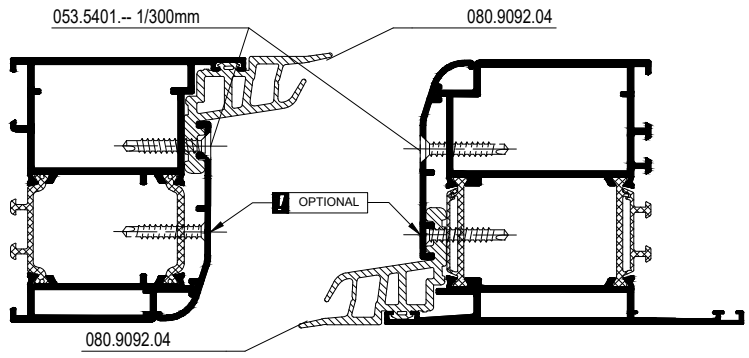

X DICHTINGSMIDDEL
MATIERE D'ETANCHEITE
SEALING AGENT
ABDICHTUNG

ANTI FINGER TRAP DOOR WEATHER STRIP OUTWARD OPENING

DOOR OUTWARD OPENING WITH DOUBLE WEATHER STRIP - ANTI FINGER TRAP

MASTERLINE 8-Fu

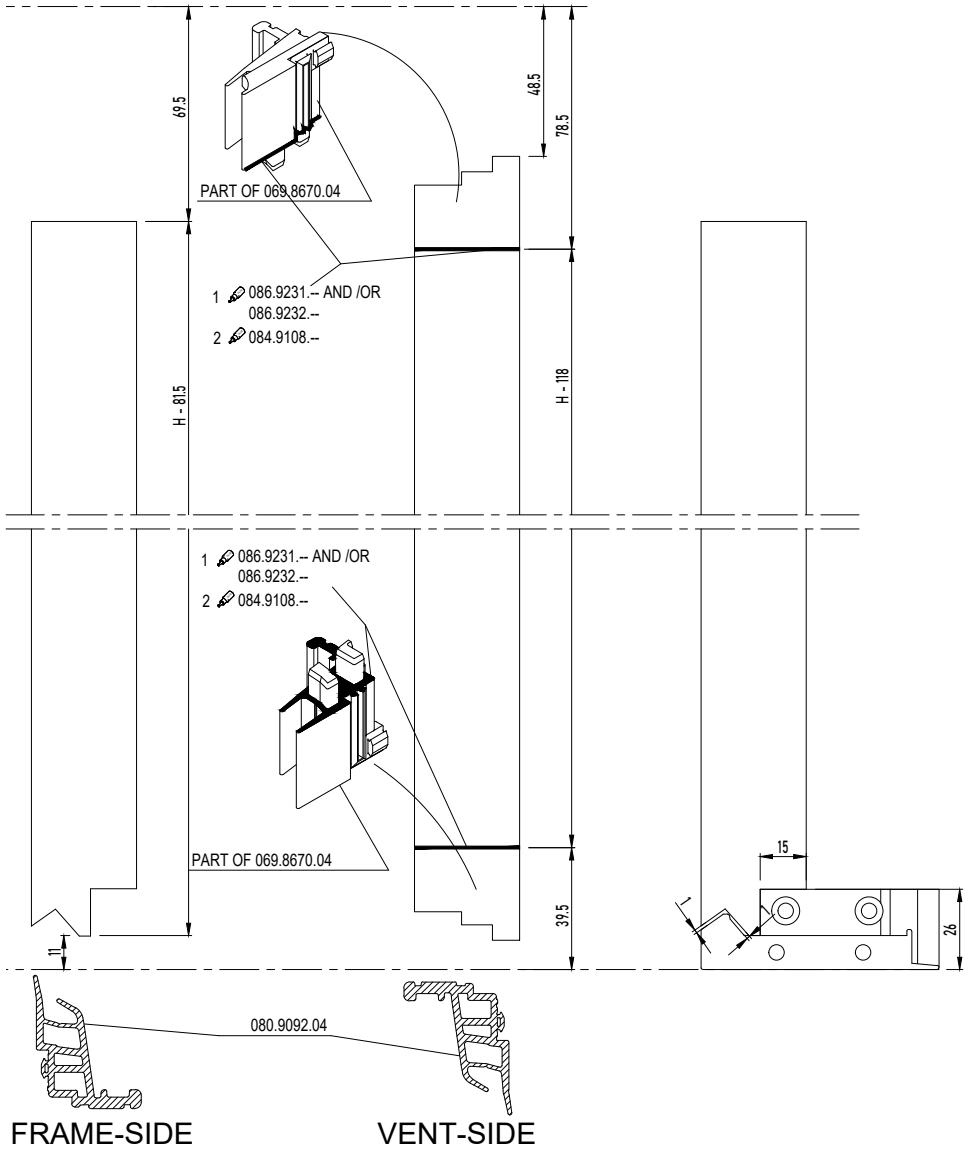

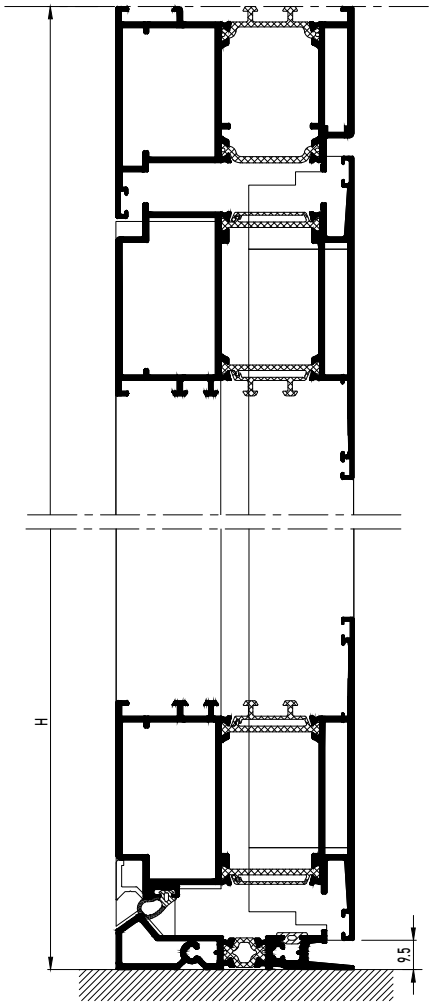

DRAINAGE CR PANEL DOOR

DRAINAGE VENT

MASTERLINE 8-Fu

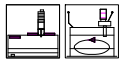

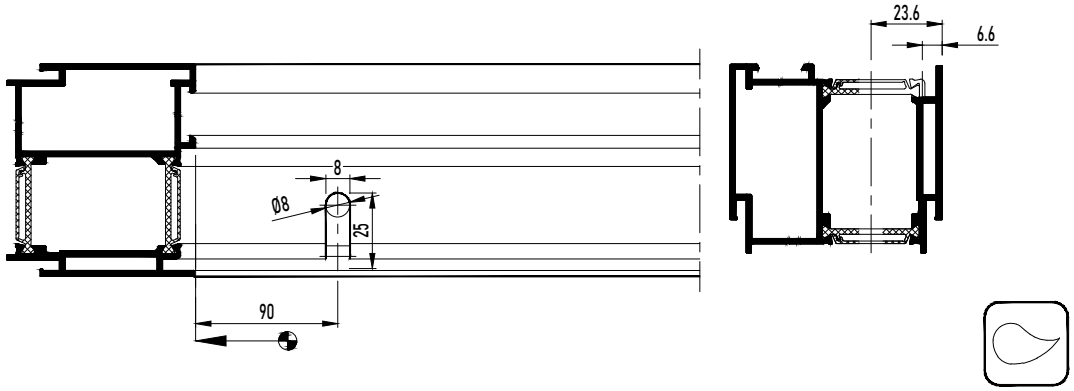

DRAINAGE MC PANEL DOOR

DRAINAGE VENT

MASTERLINE 8-Fu

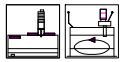

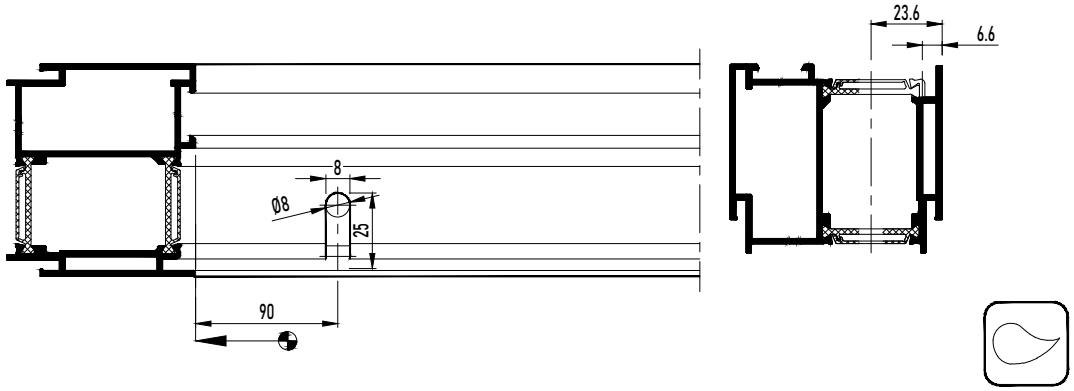

ASSEMBLY END PIECE PANEL DOOR

END PIECES Z-T PANEL DOOR

MASTERLINE 8-Fu

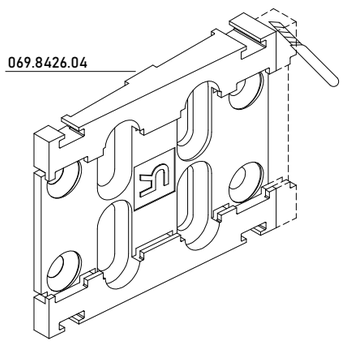

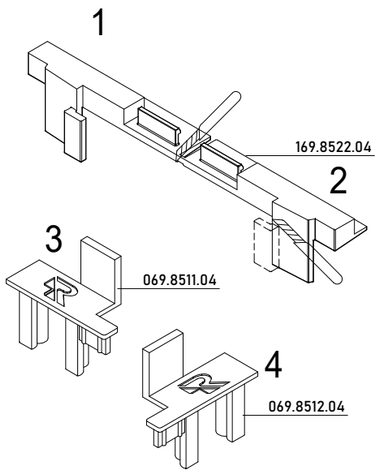

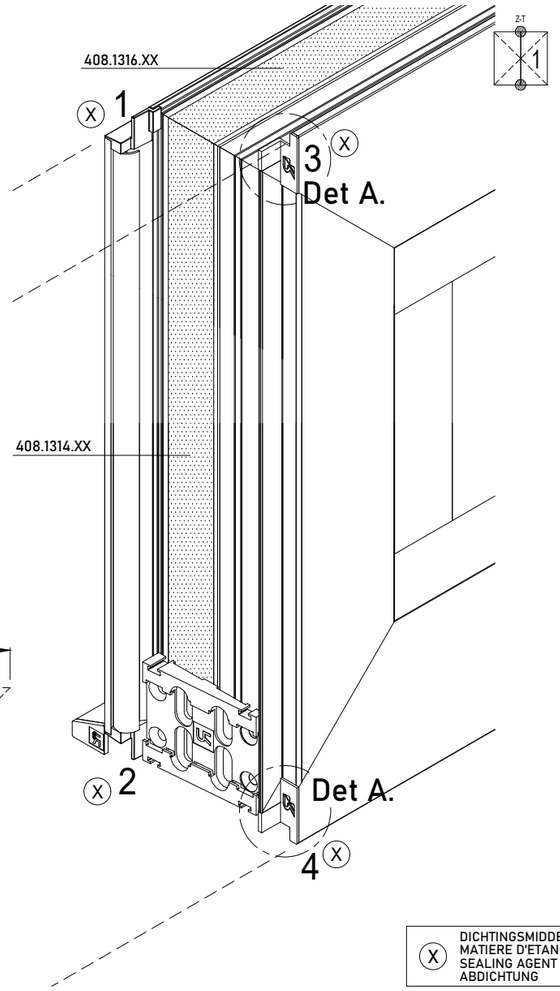

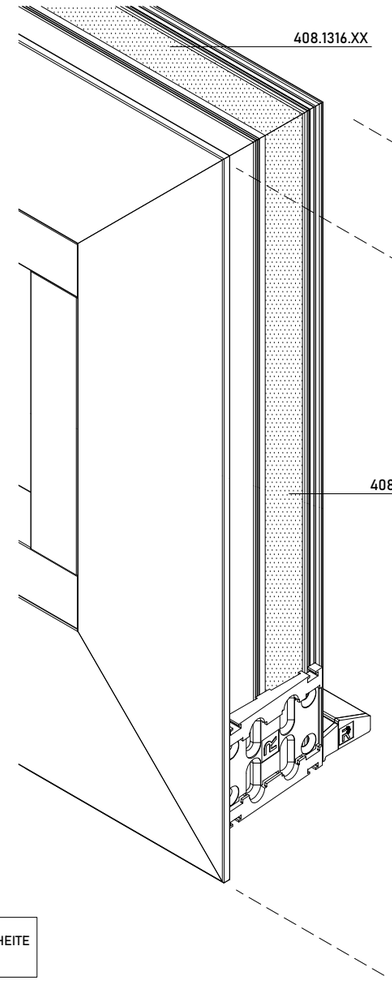



Det A.

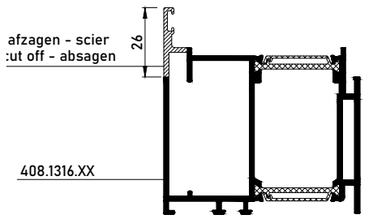

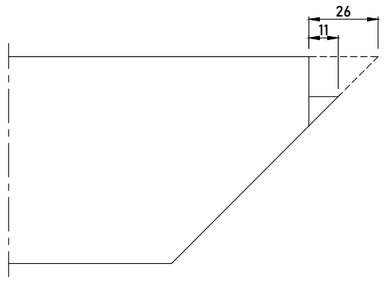

X DICHTINGSMIDDEL
MATIERE D'ETANCHEITE
SEALING AGENT
ABDICHTUNG

ASSEMBLY END PIECE PANEL DOOR

END PIECES Z-T PANEL DOOR

MASTERLINE 8-Fu

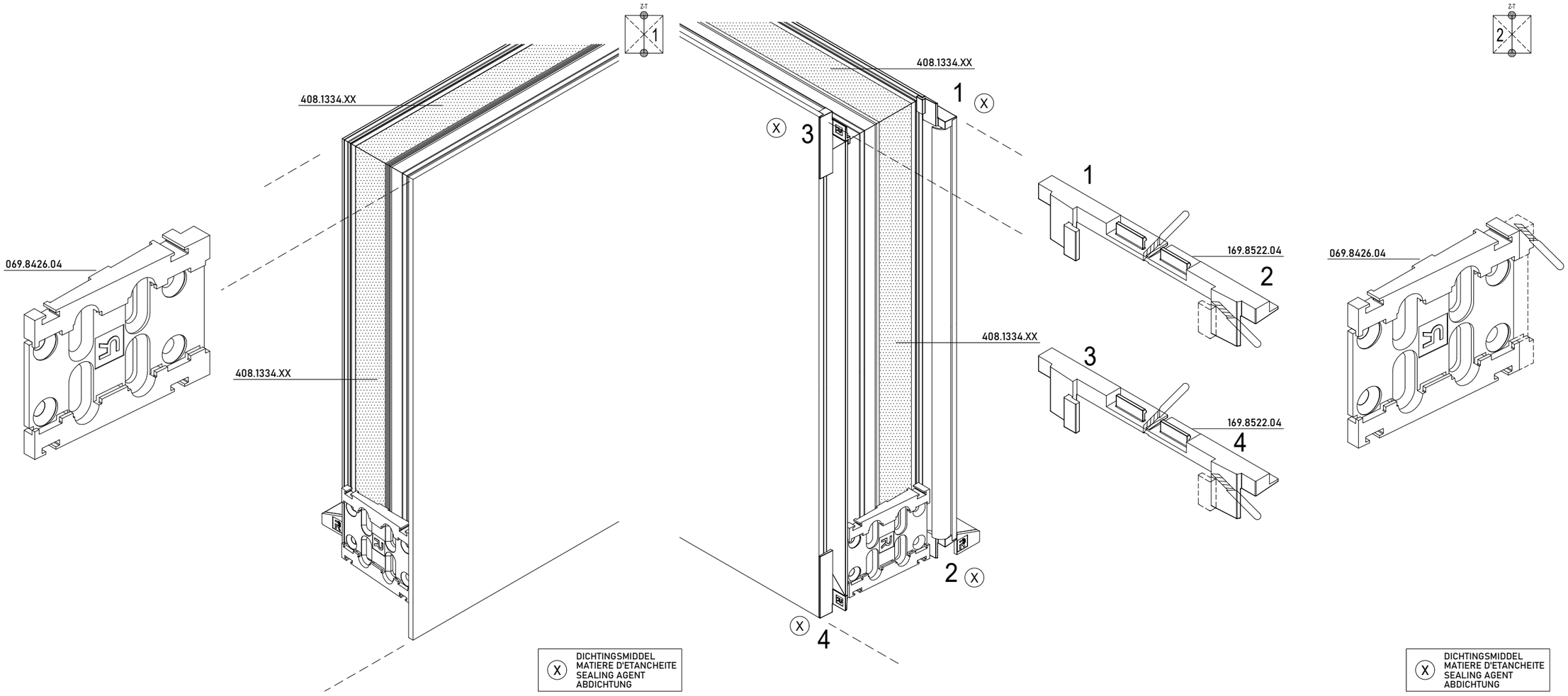

GLUEING PANEL PANEL DOOR

GLUE PANEL

MASTERLINE 8-Fu

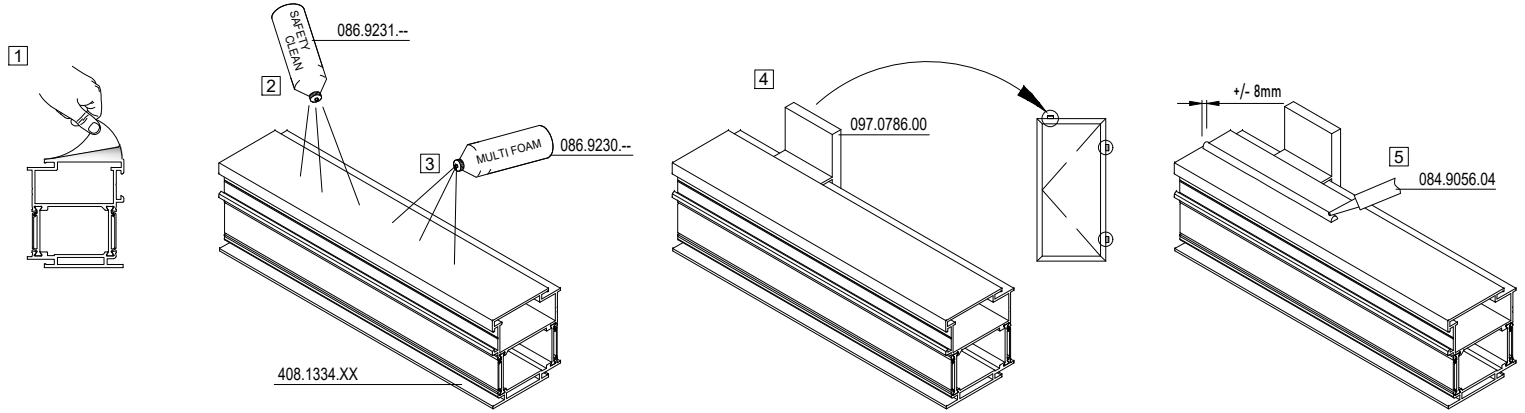

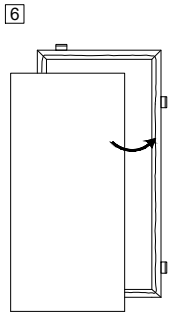

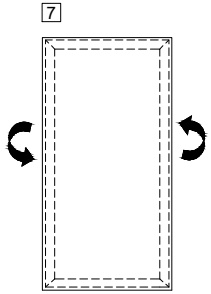

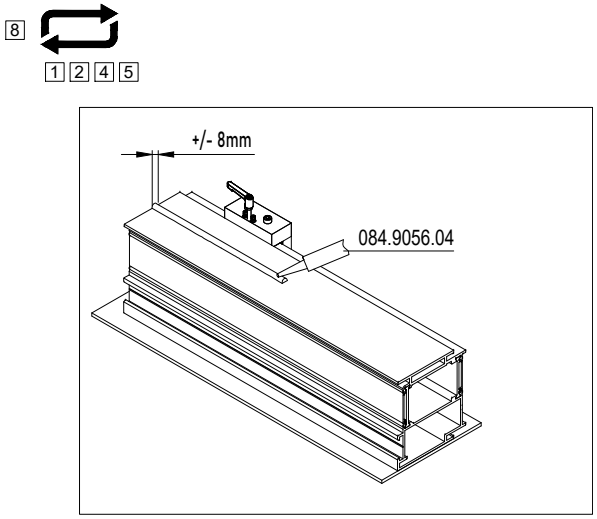

Reynaers garandeert de kwaliteit van de geleverde profielen. De kwaliteit en het testen van de hechting zijn de verantwoordelijkheid van de fabrikant.
Reynaers garantit la qualité des profilés livrés. La qualité et l'essai de l'adhésion sont la responsabilité du fabricant.
Reynaers guarantees the quality of the delivered profiles. The quality and testing of the adhesion is the sole responsibility of the manufacturer.
Reynaers garantiert die Qualität der gelieferten Profile. Die Qualität und die Prüfung der Haftung sind die Verantwortung des Herstellers

GLUEING PANEL PANEL DOOR

GLUE PANEL

MASTERLINE 8-Fu

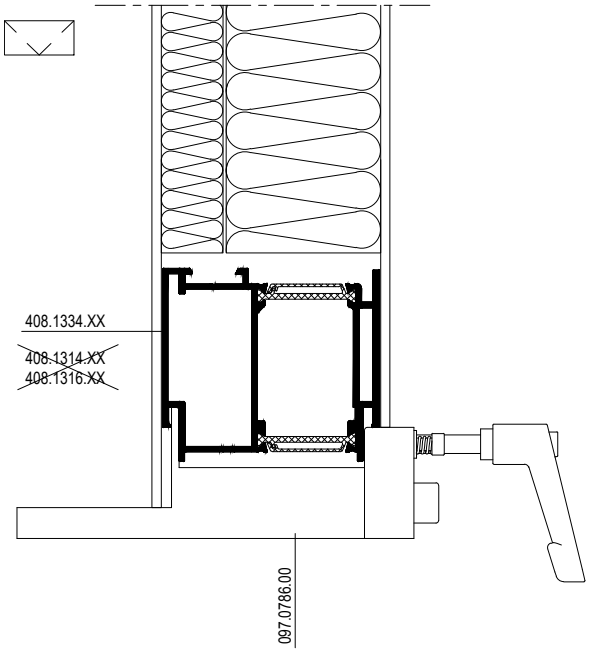

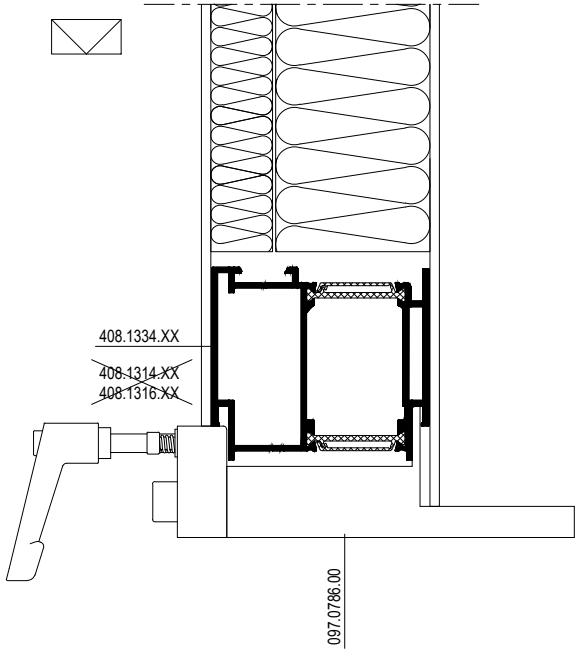

MONTAGEVOLGORDE L'ORDRE DE MONTAGE THE ORDER OF ASSEMBLY MONTAGEREIHENFOLGE	1 2 3 .

PANEL DOOR BRUSH INWARD OPENING

PANEL DOOR INWARD OPENING WITH BRUSH

MASTERLINE 8-Fu

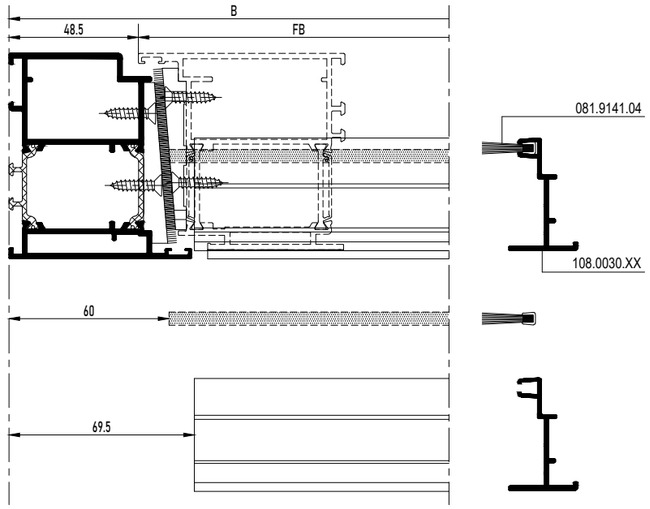

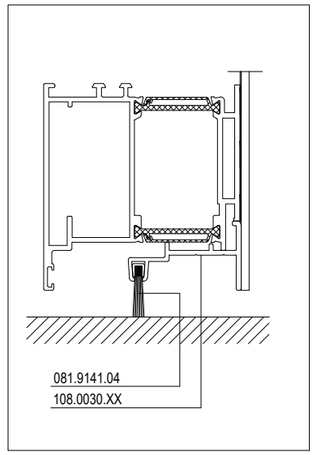

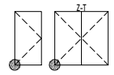

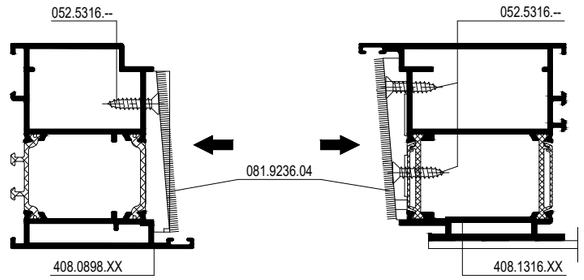

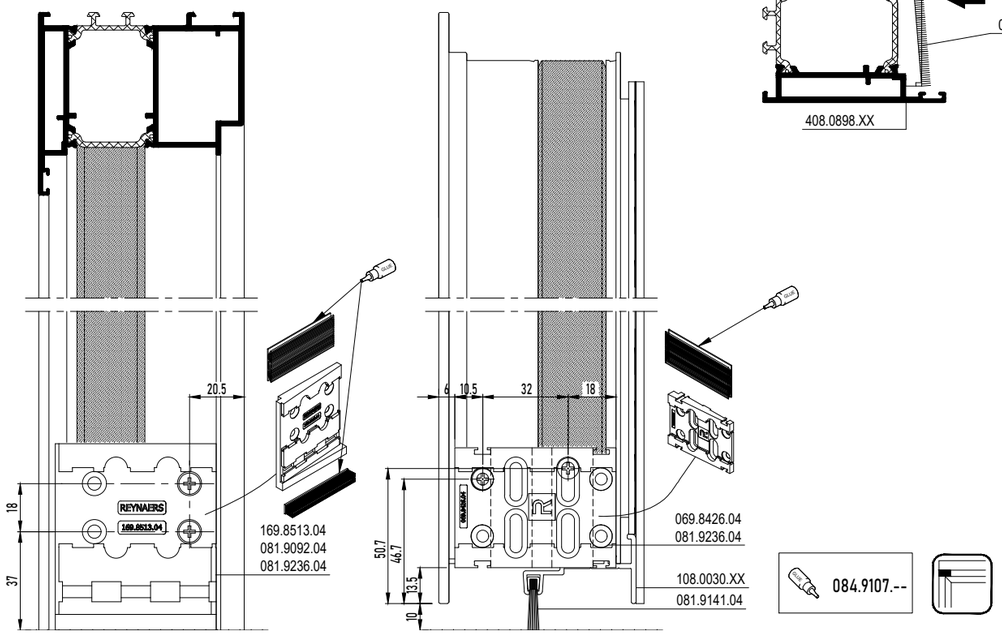

PANEL DOOR BRUSH INWARD OPENING

PANEL DOOR INWARD OPENING WITH BRUSH

MASTERLINE 8-Fu

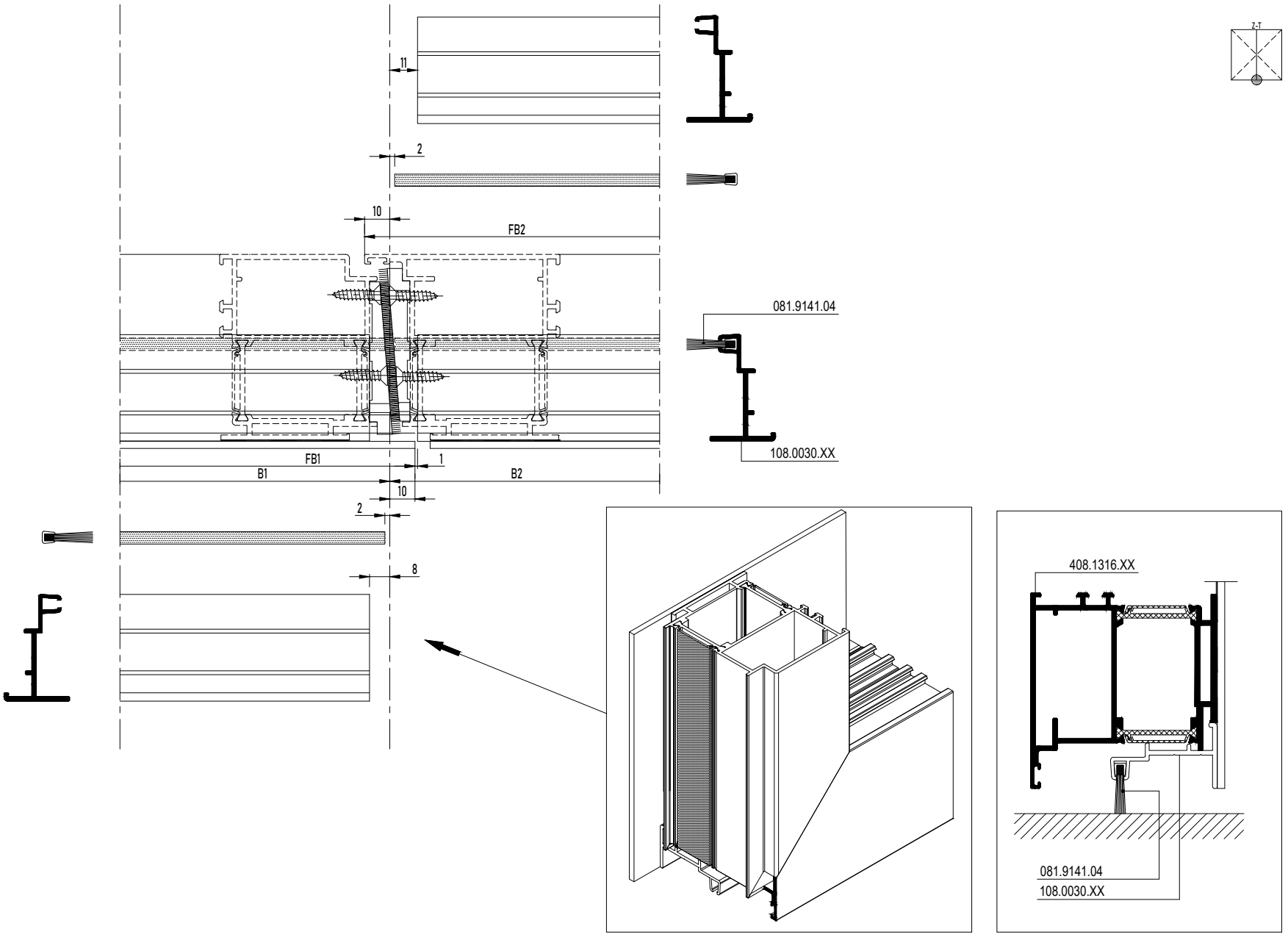

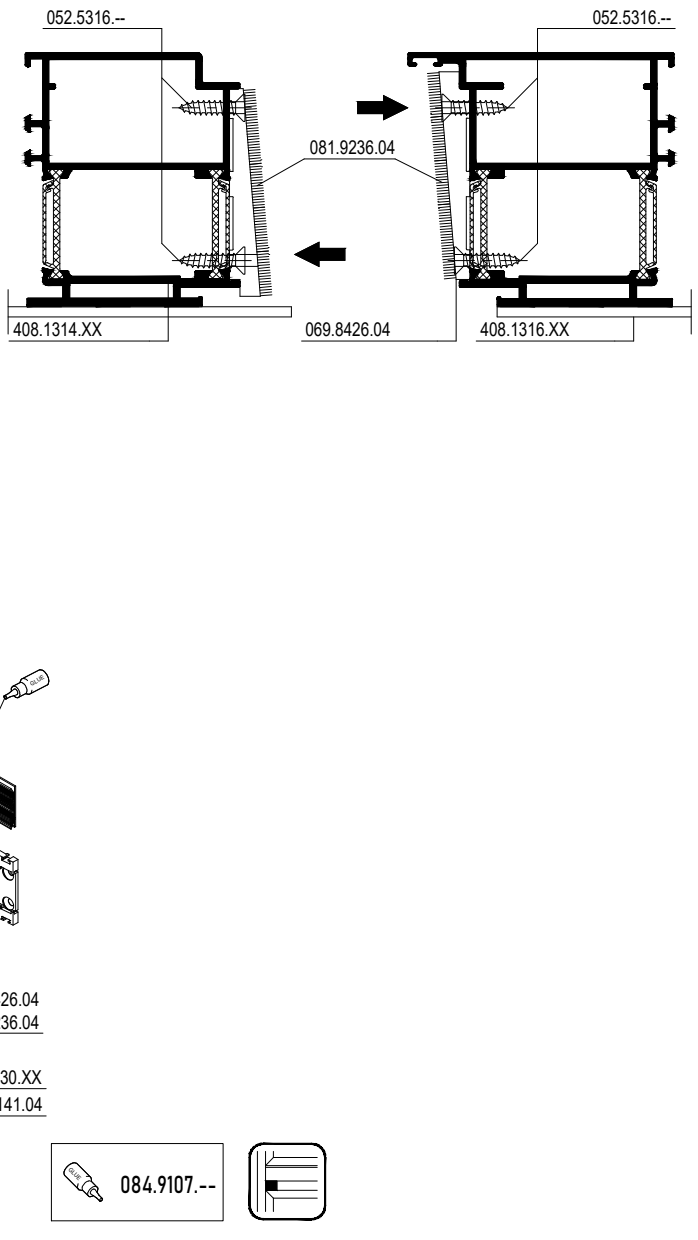

PANEL DOOR WEATHER STRIP INWARD OPENING

PANEL DOOR INWARD OPENING WITH DOUBLE WEATHER STRIP

MASTERLINE 8-Fu

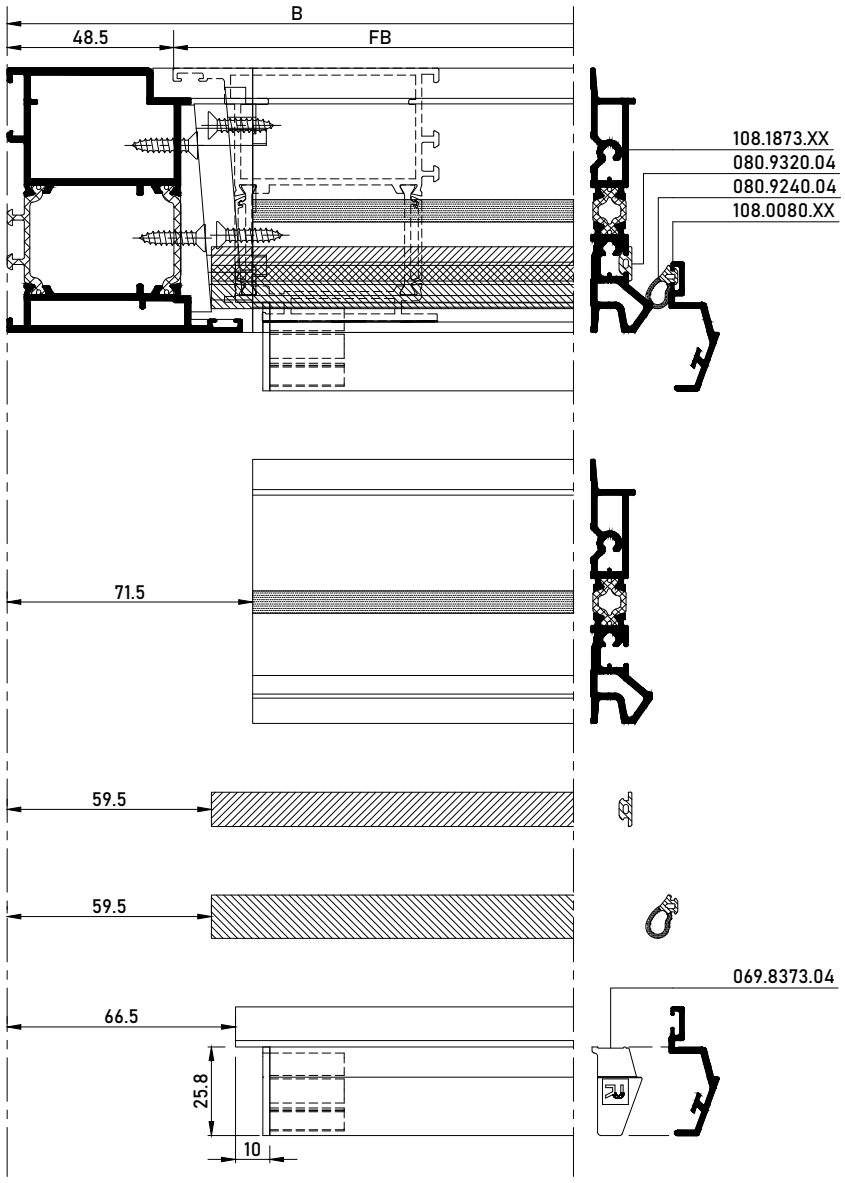

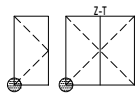

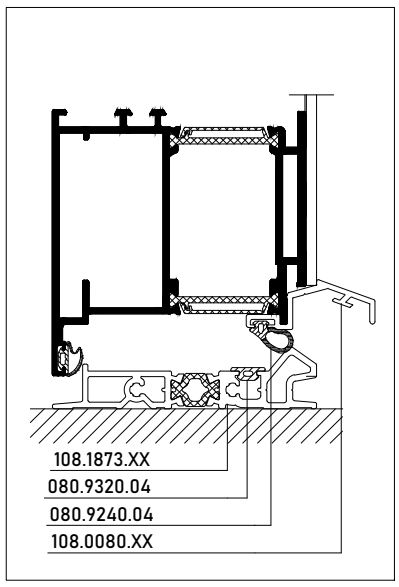

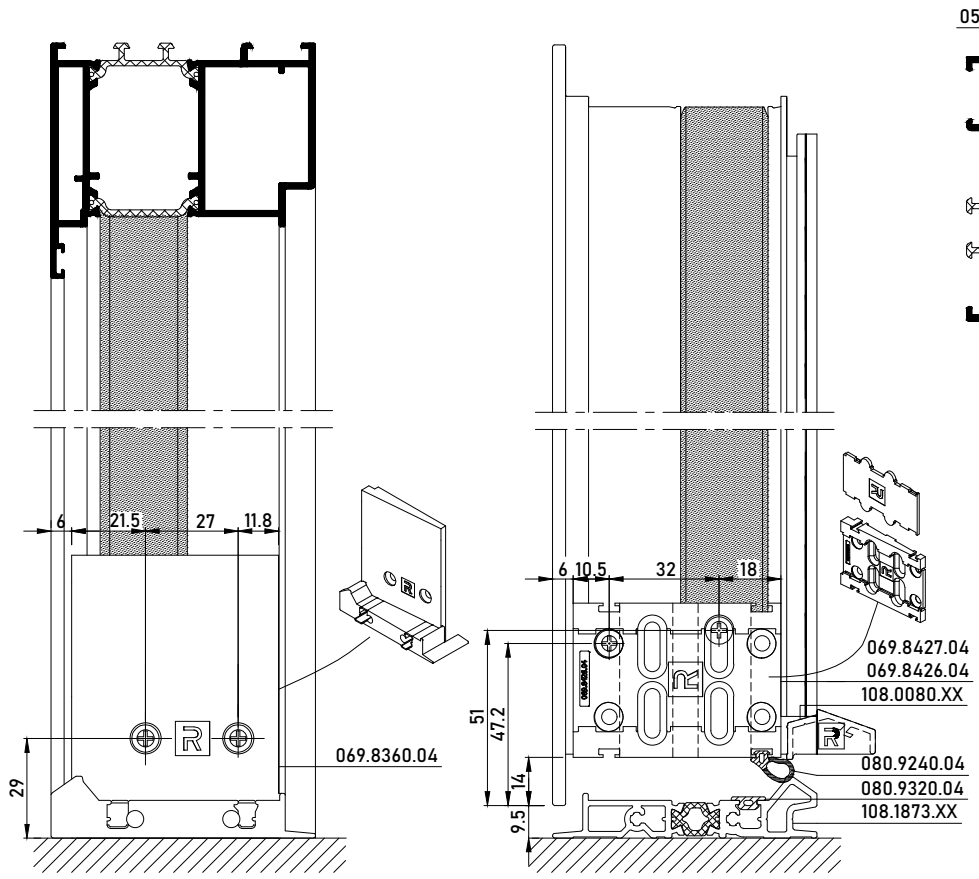

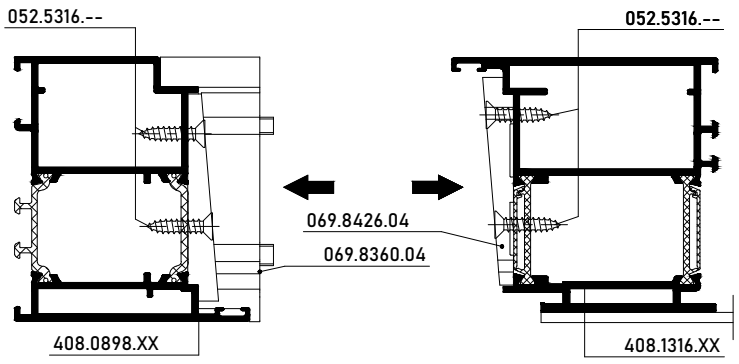



PANEL DOOR WEATHER STRIP INWARD OPENING

PANEL DOOR INWARD OPENING WITH DOUBLE WEATHER STRIP

MASTERLINE 8-Fu

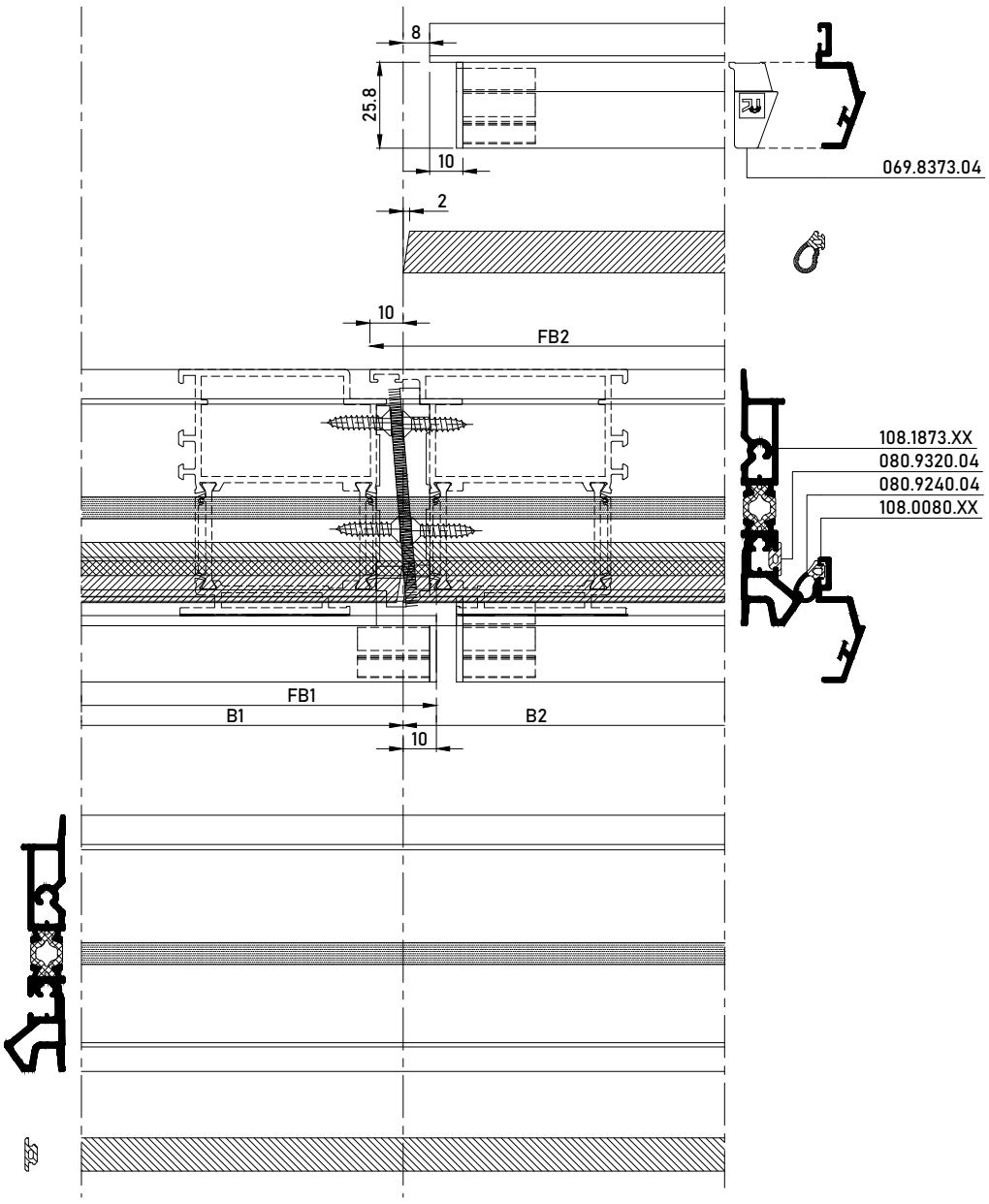

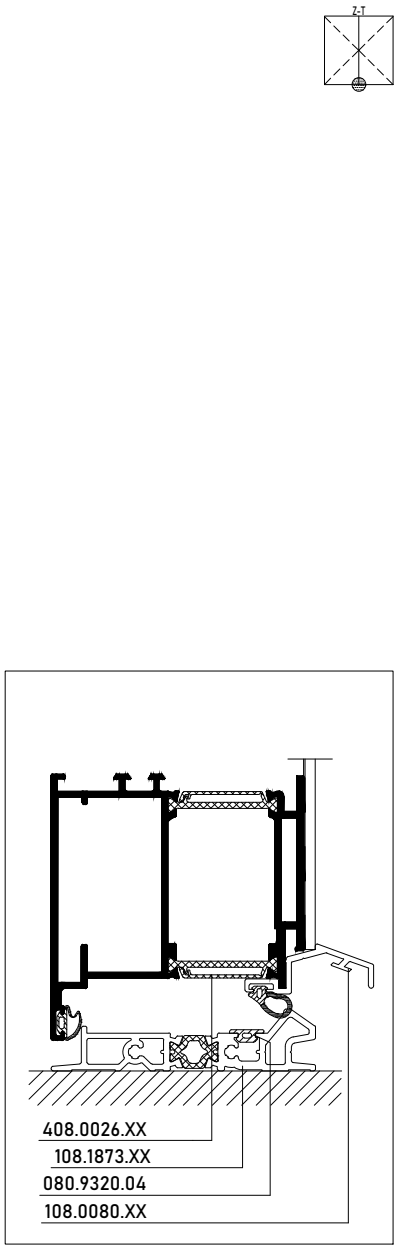

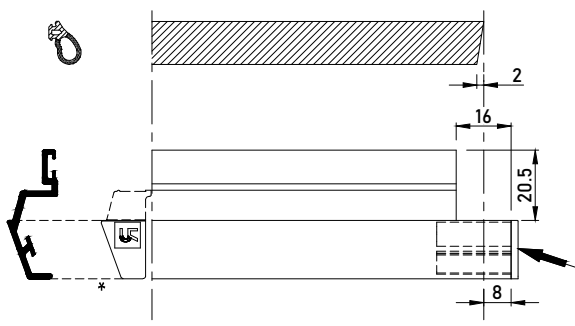

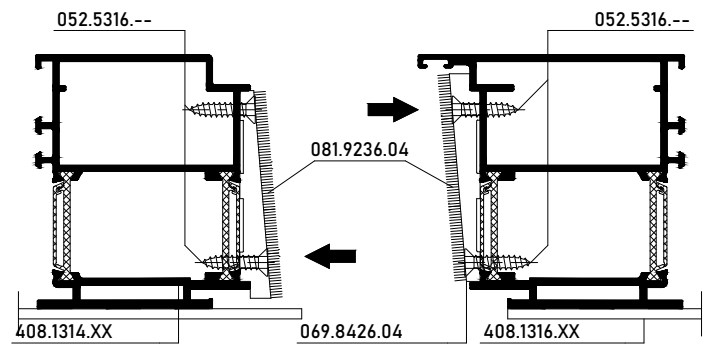

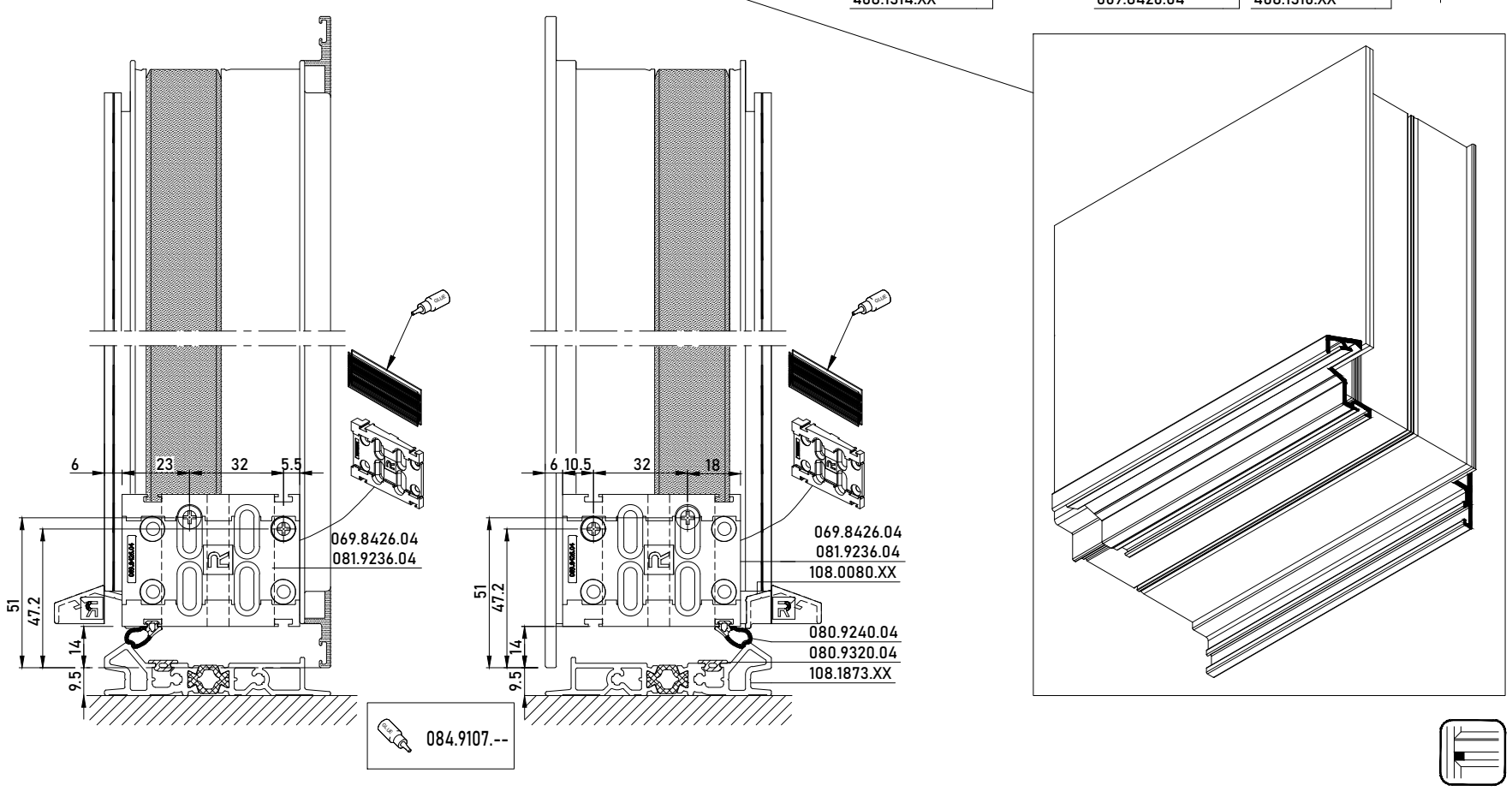

PANEL DOOR AUTOMATIC SEALING INWARD OPENING

PANEL DOOR INWARD OPENING WITH DOOR LATCH

MASTERLINE 8-Fu

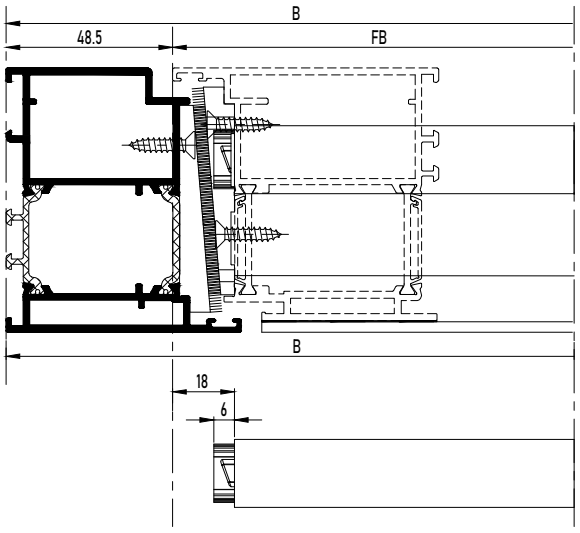

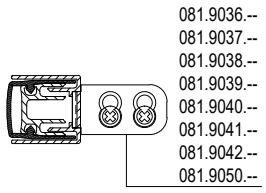

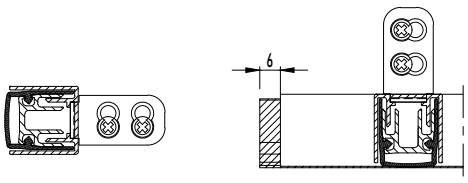

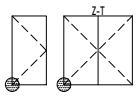

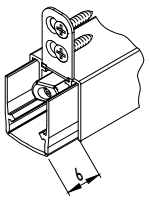

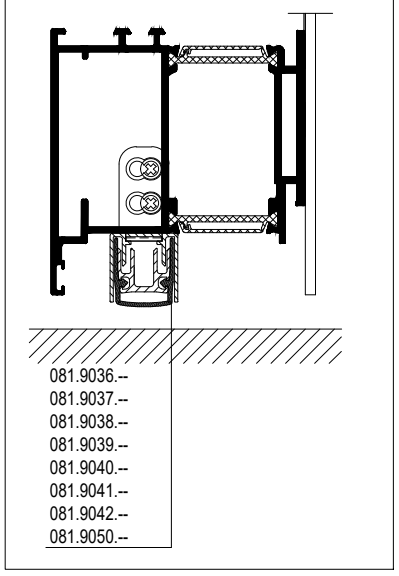

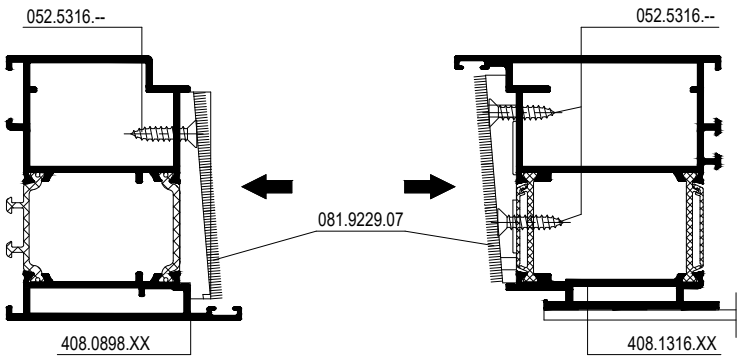

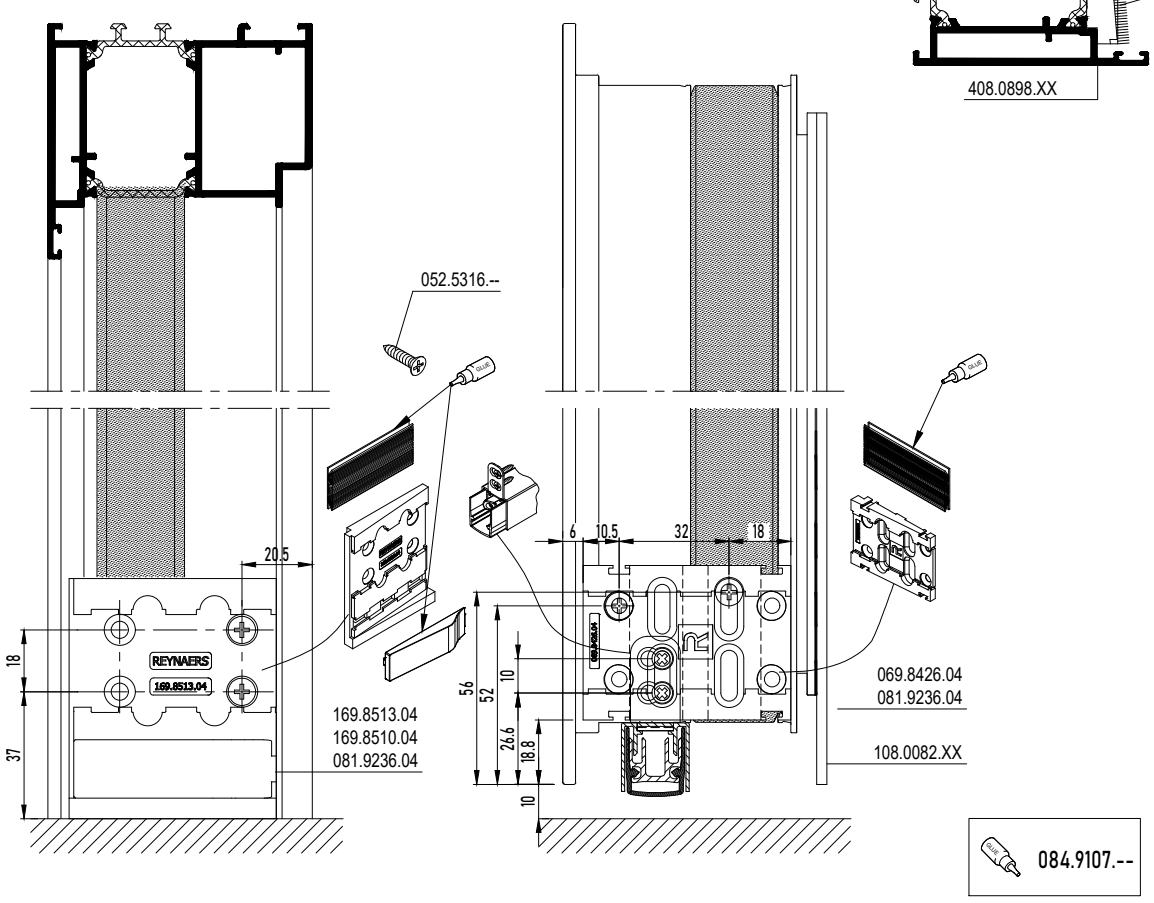

PANEL DOOR AUTOMATIC SEALING INWARD OPENING

PANEL DOOR INWARD OPENING WITH DOOR LATCH

MASTERLINE 8-Fu

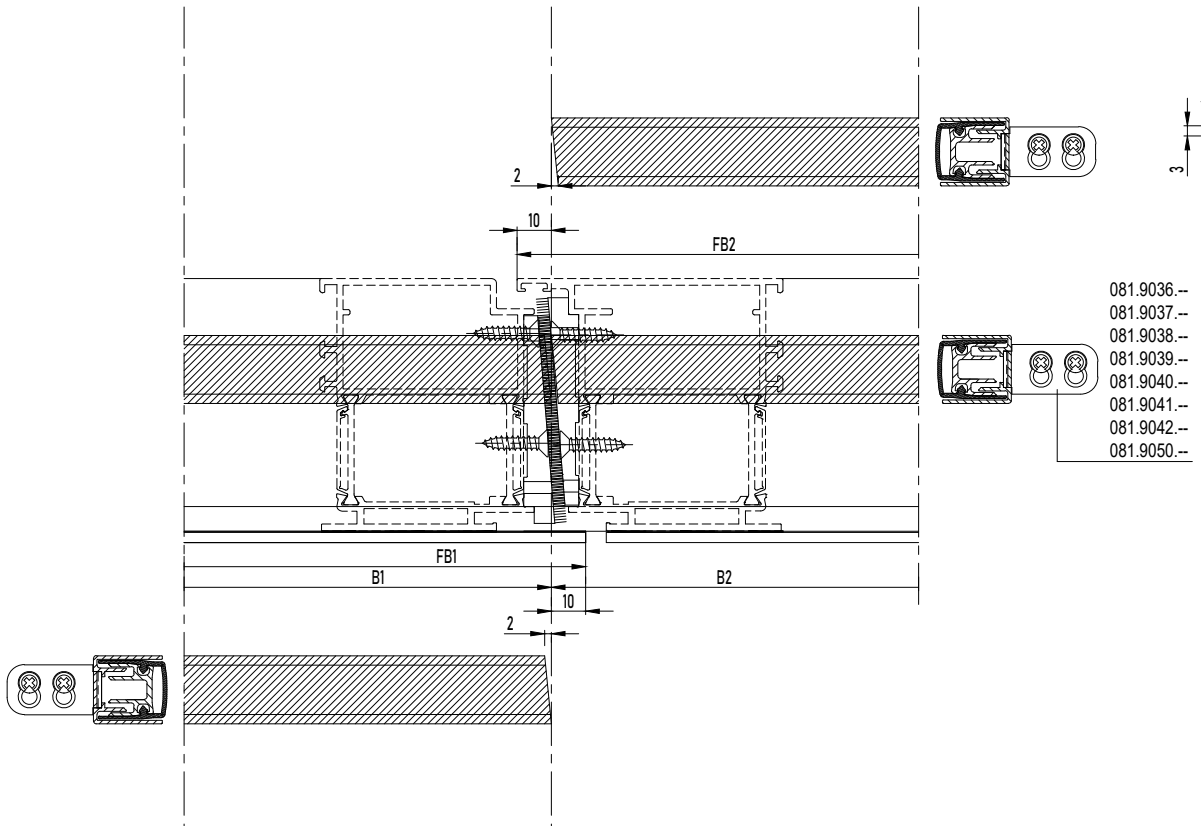

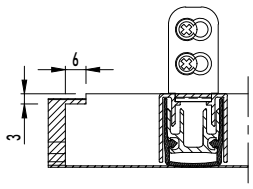



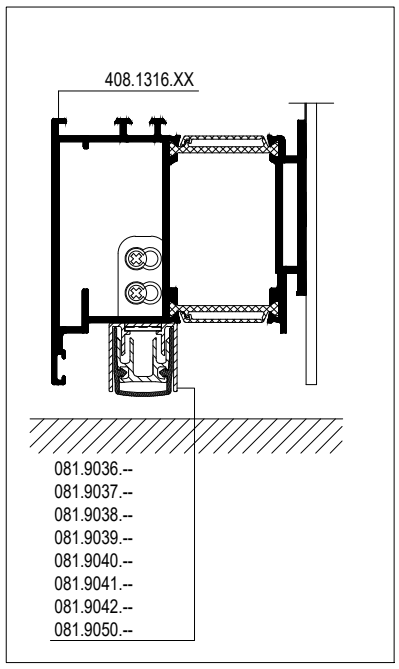

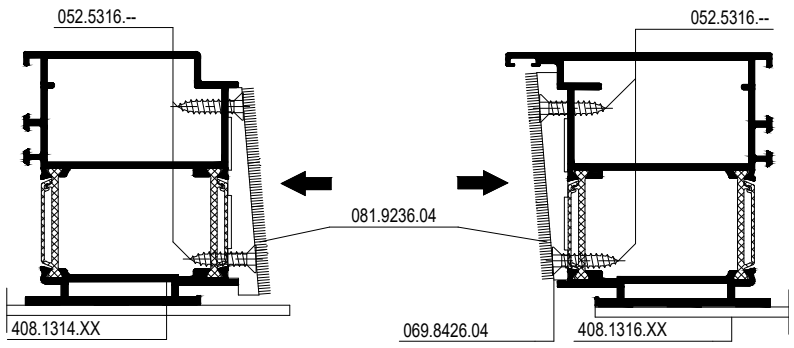

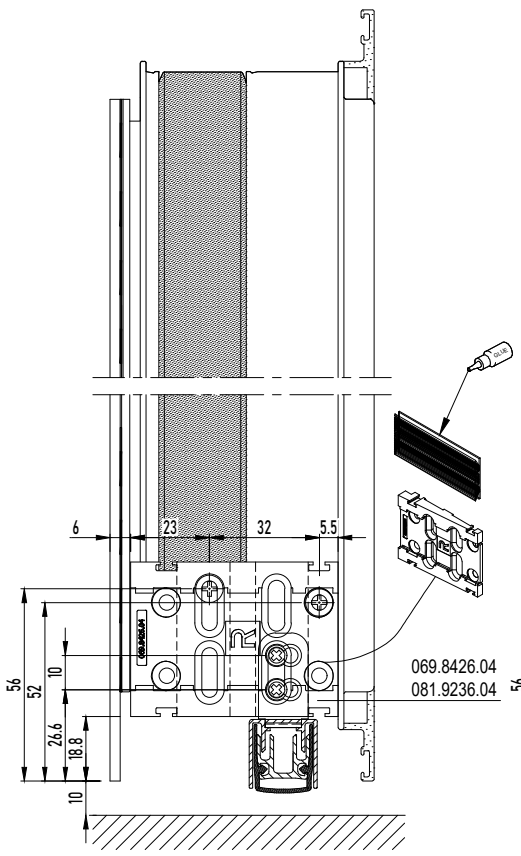

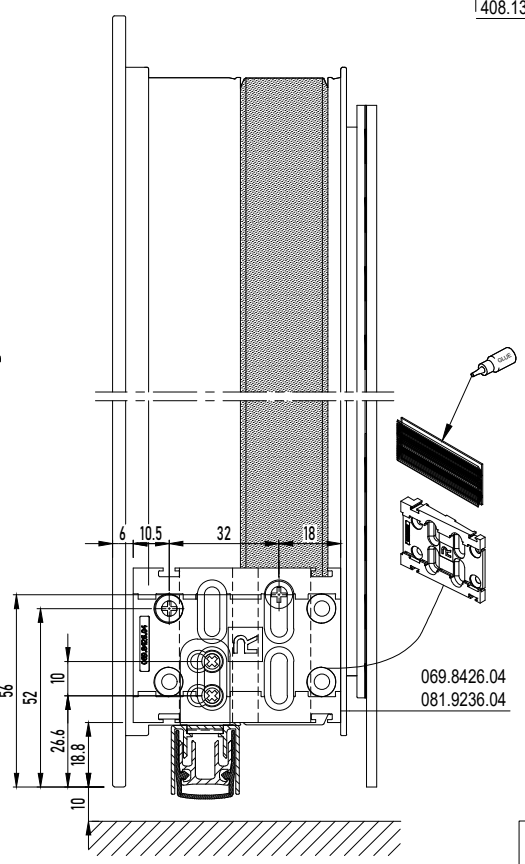





PANEL DOOR DOUBLE SIDED BRUSH INWARD OPENING

PANEL DOOR DOUBLE SIDED INWARD OPENING WITH BRUSH

MASTERLINE 8-Fu

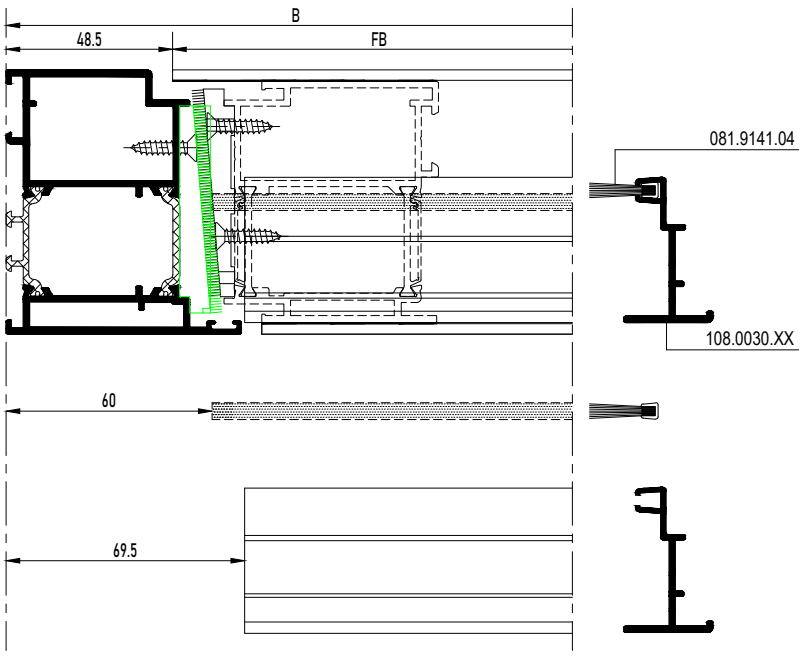

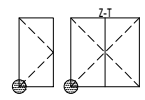

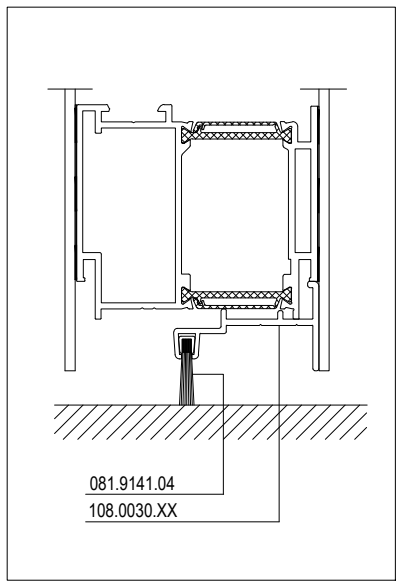

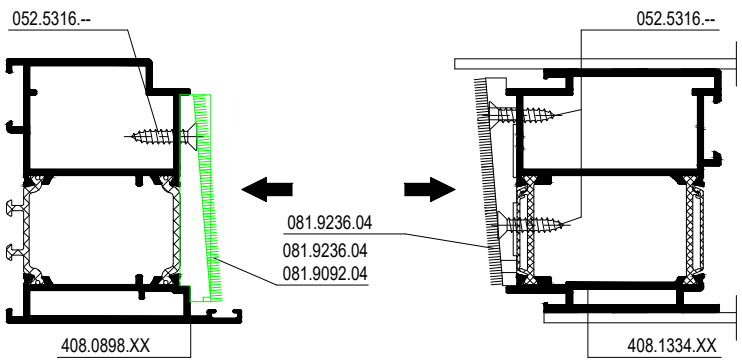

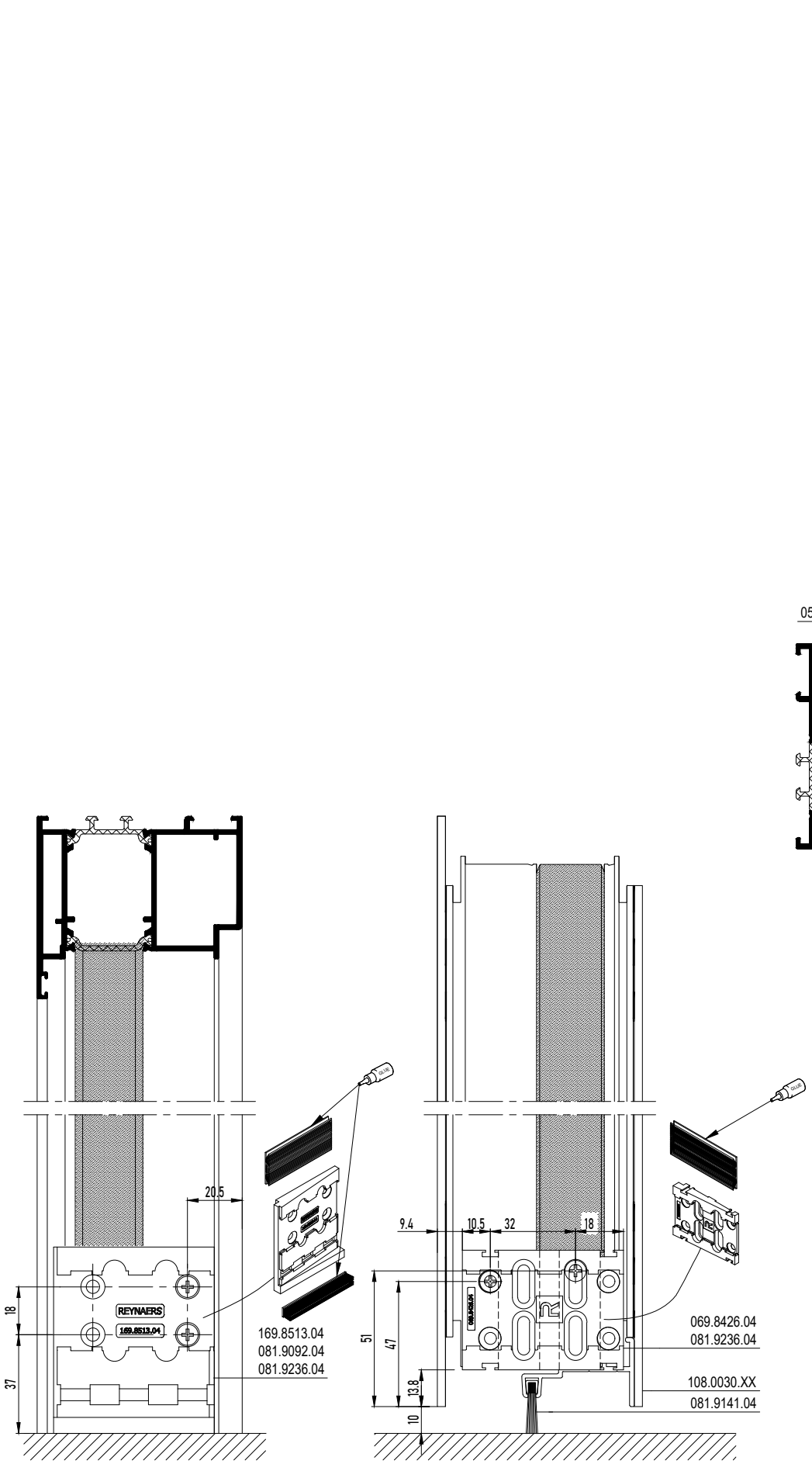

084.9107.--

PANEL DOOR DOUBLE SIDED BRUSH INWARD OPENING

PANEL DOOR DOUBLE SIDED INWARD OPENING WITH BRUSH

MASTERLINE 8-Fu

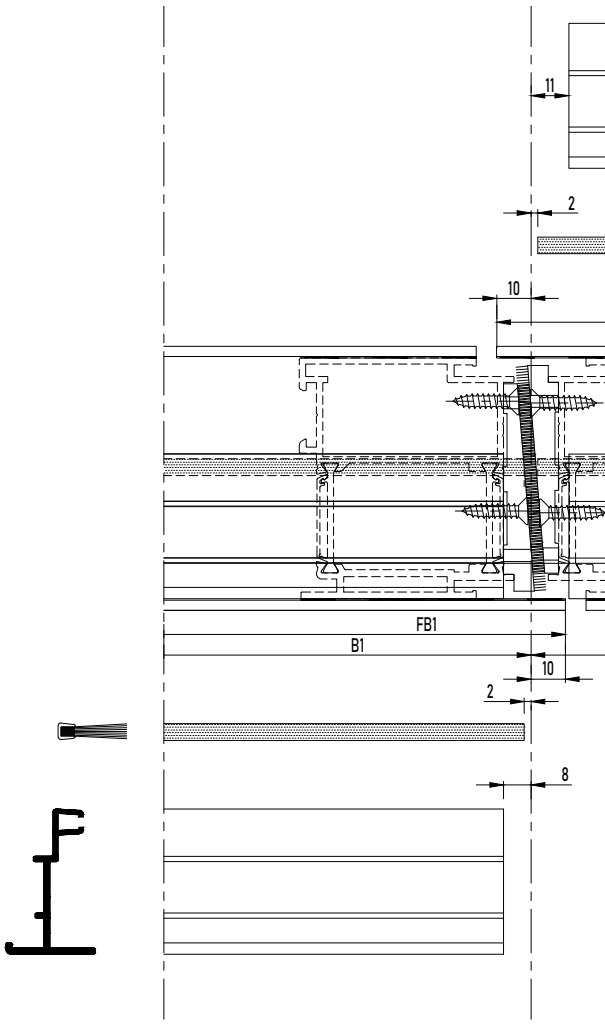

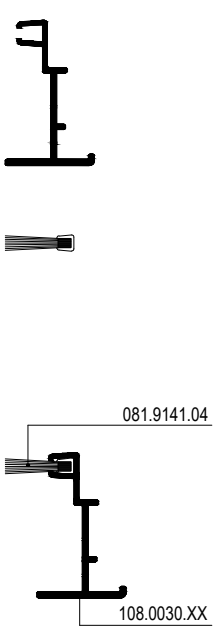



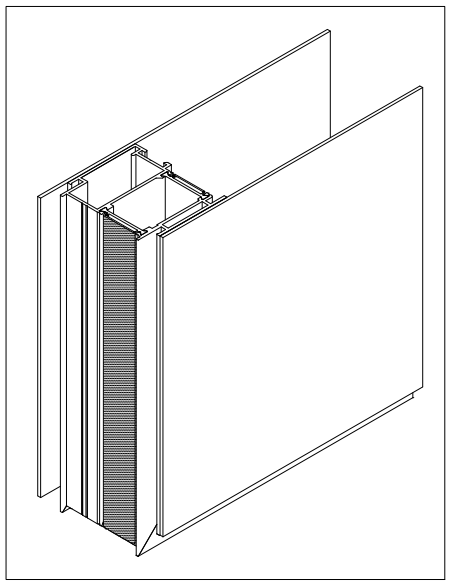

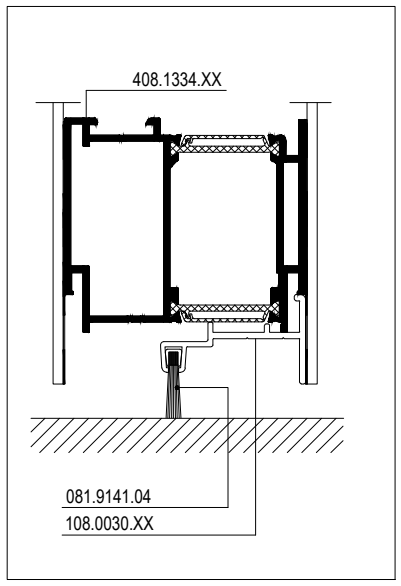

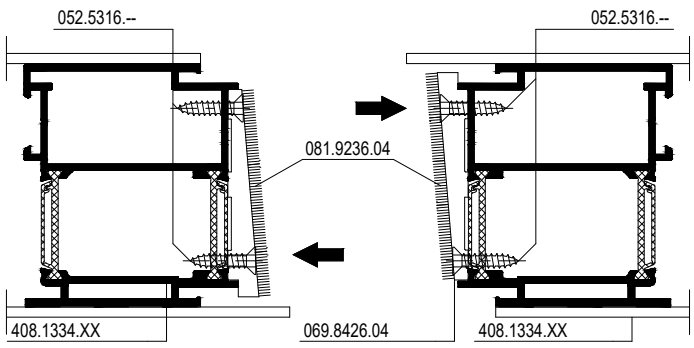

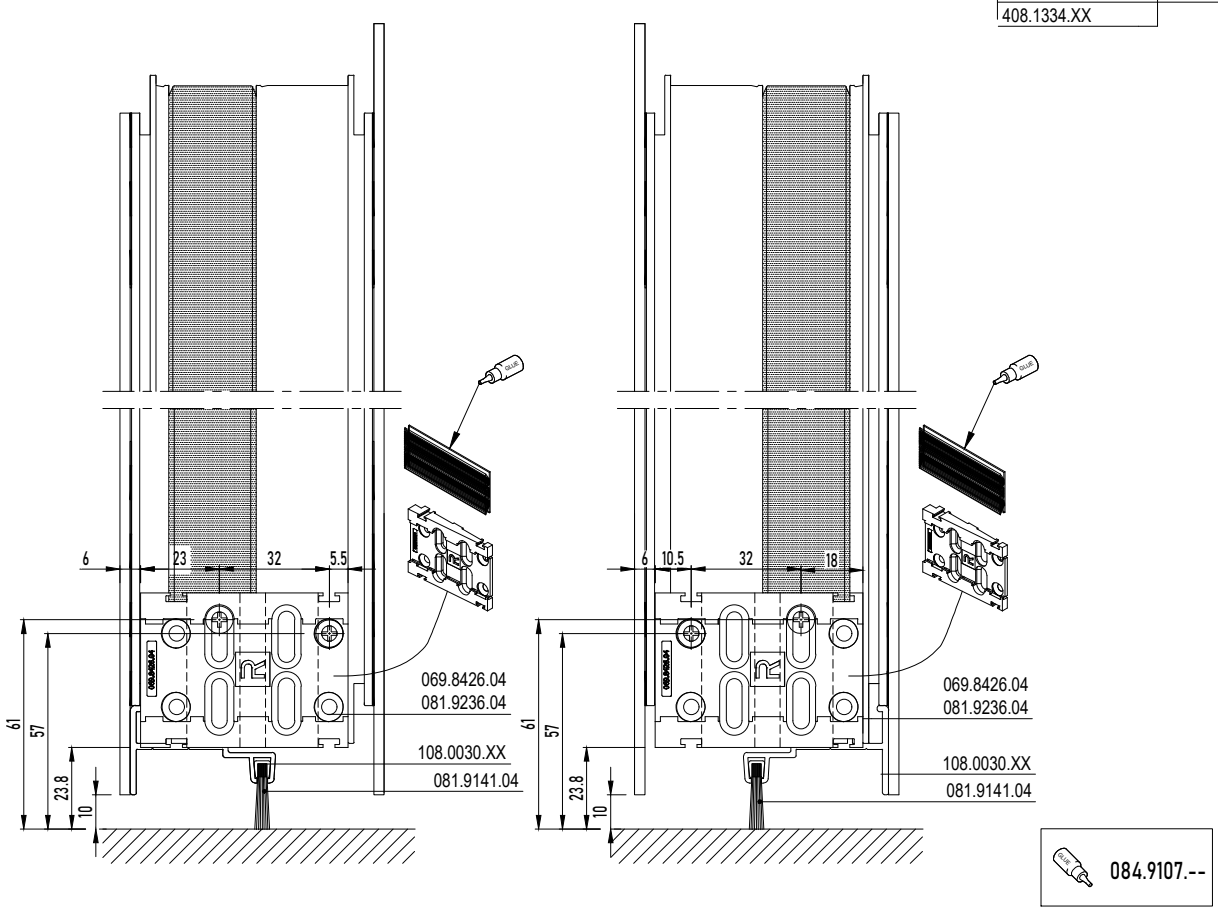

084.9107.--

PANEL DOOR DOUBLE SIDED WEATHER STRIP INWARD OPENING

PANEL DOOR DOUBLE SIDED INWARD OPENING WITH DOUBLE WEATHER STRIP

MASTERLINE 8-Fu

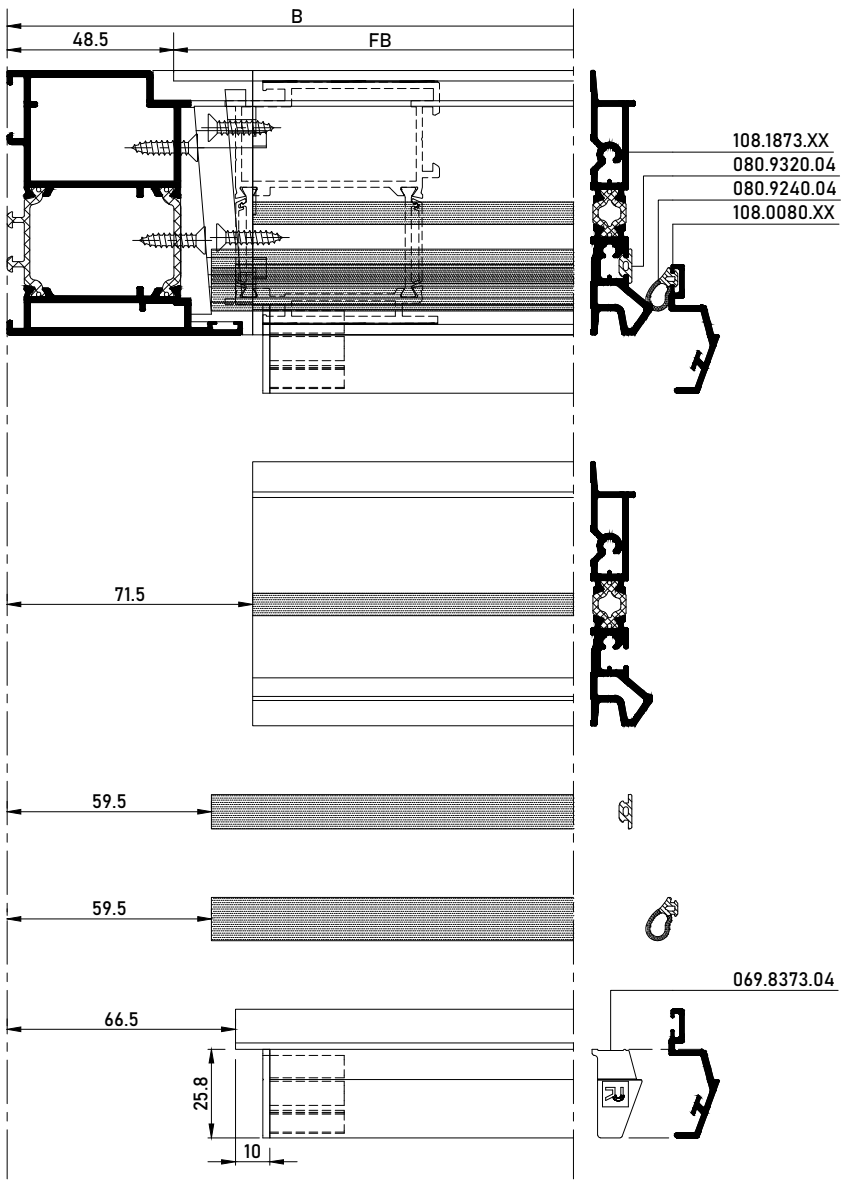

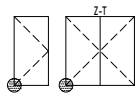

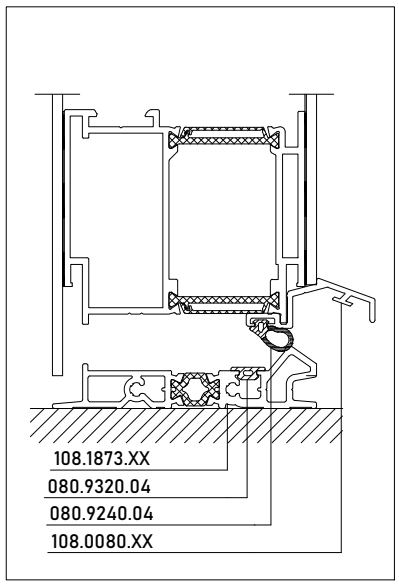

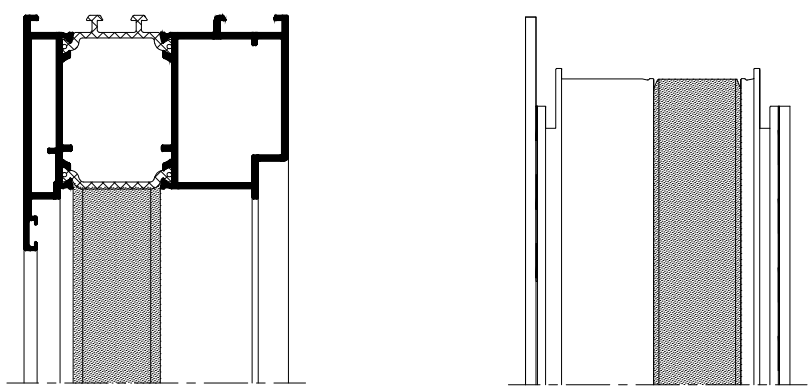

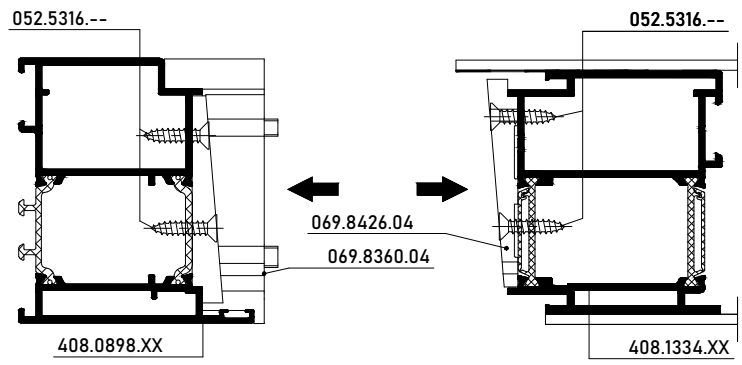

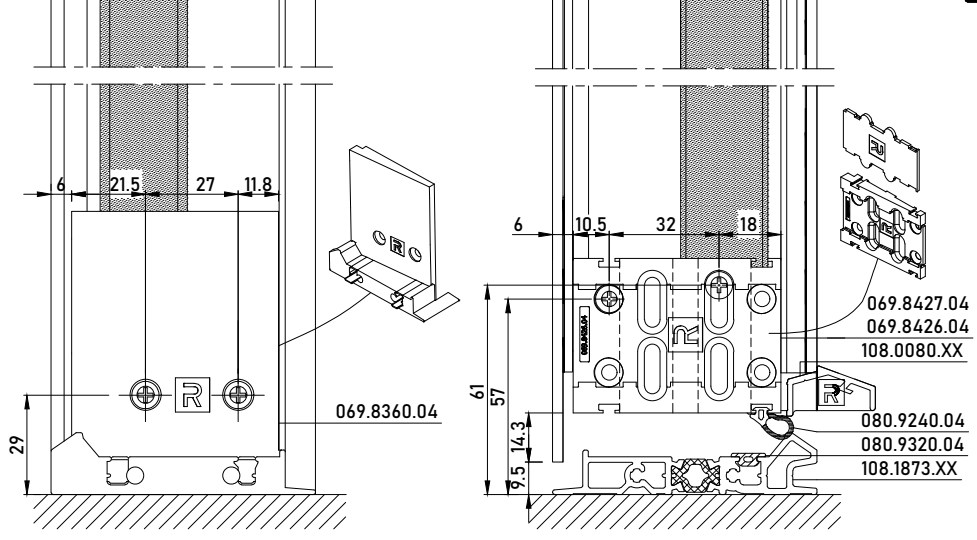



PANEL DOOR DOUBLE SIDED WEATHER STRIP INWARD OPENING

PANEL DOOR DOUBLE SIDED INWARD OPENING WITH DOUBLE WEATHER STRIP

MASTERLINE 8-Fu

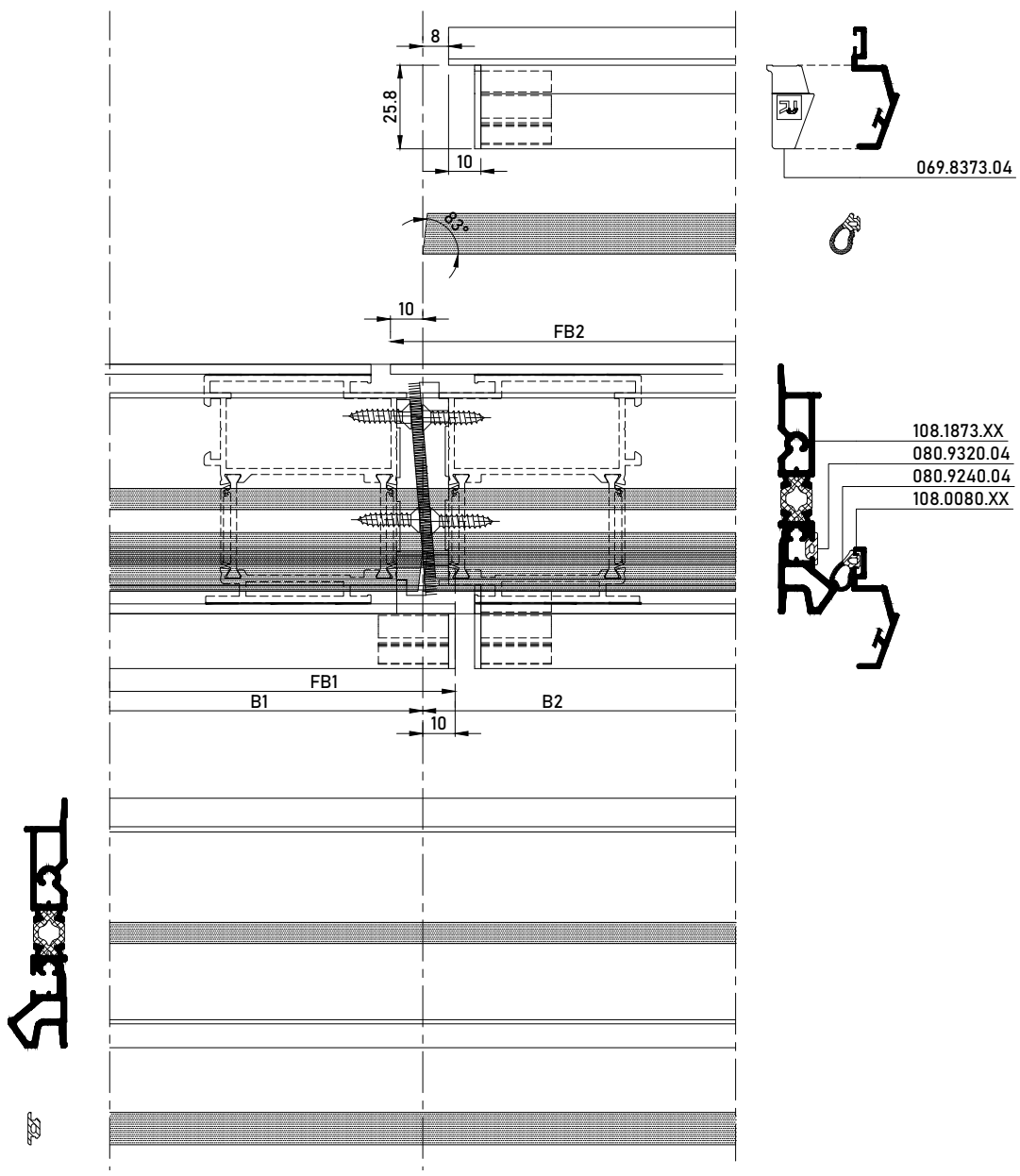



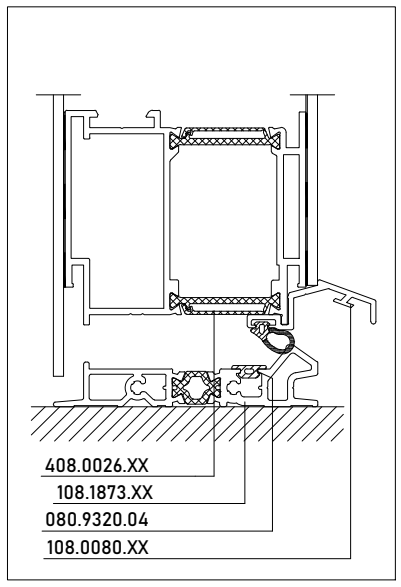

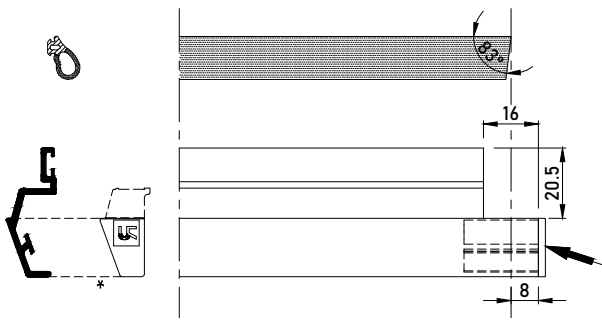

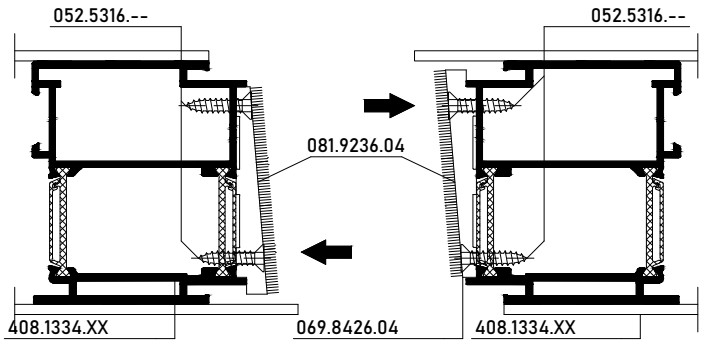

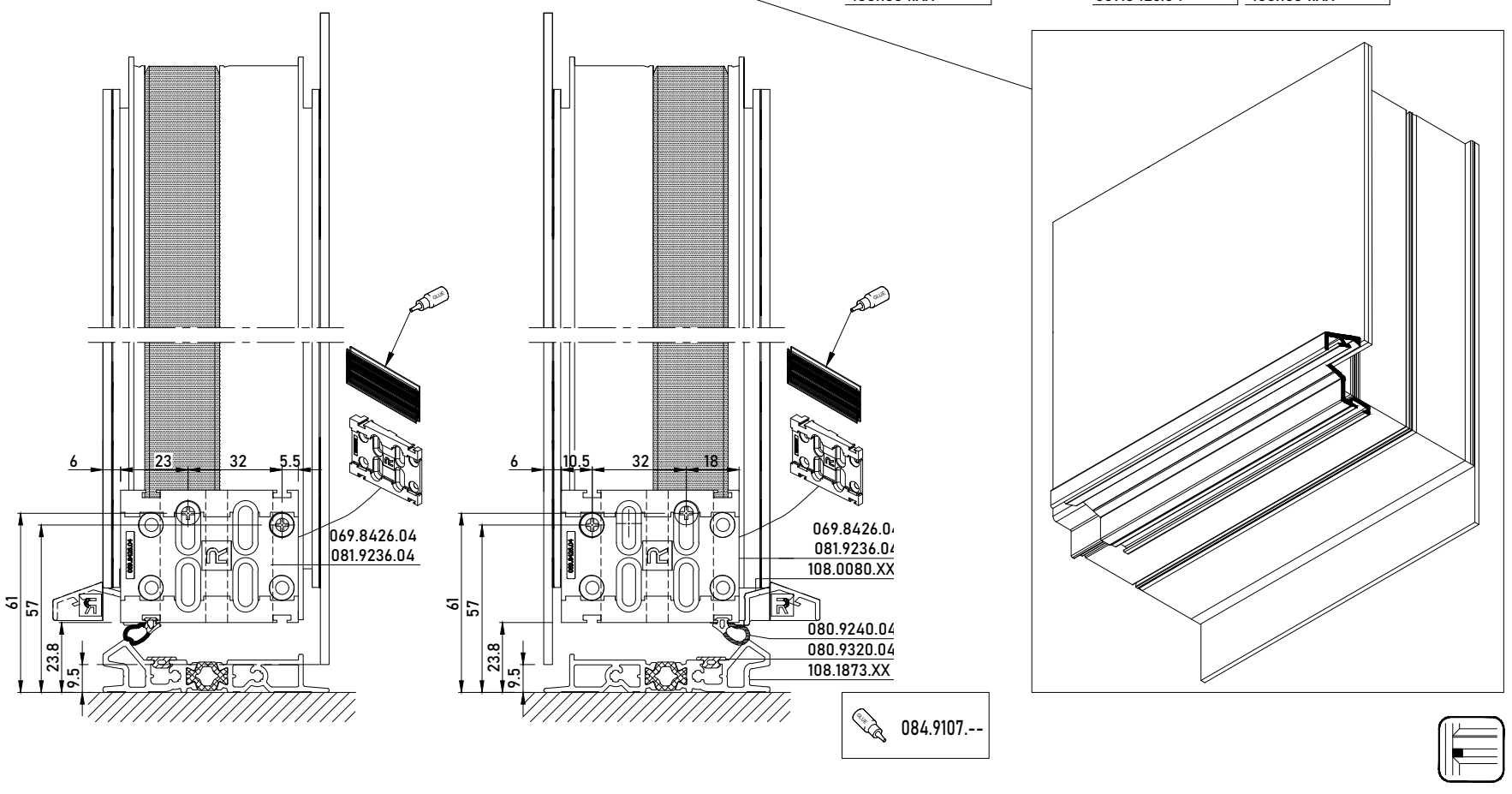

PANEL DOOR DOUBLE SIDED AUTOMATIC SEALING INWARD OPENING

PANEL DOOR DOUBLE SIDED INWARD OPENING WITH AUTOMATIC DRAUGHT EXCLUDER

MASTERLINE 8-Fu

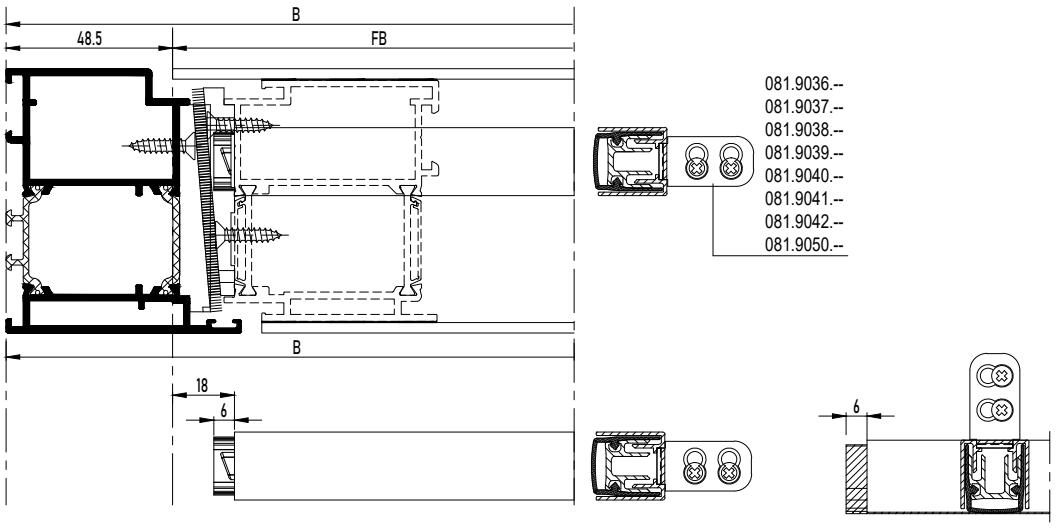

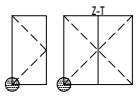

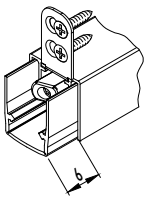

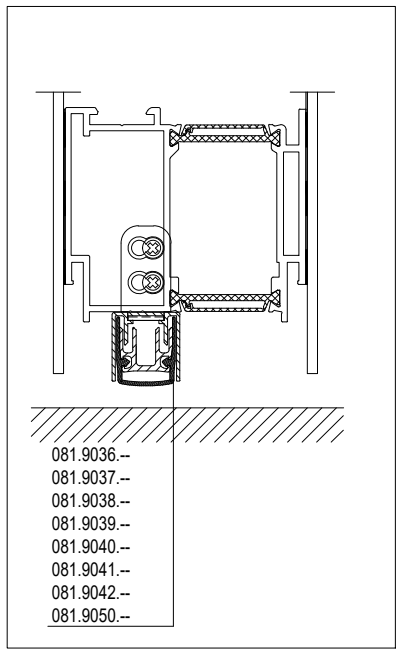

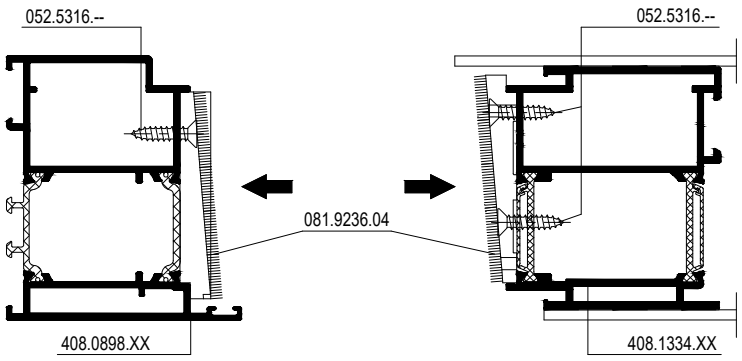

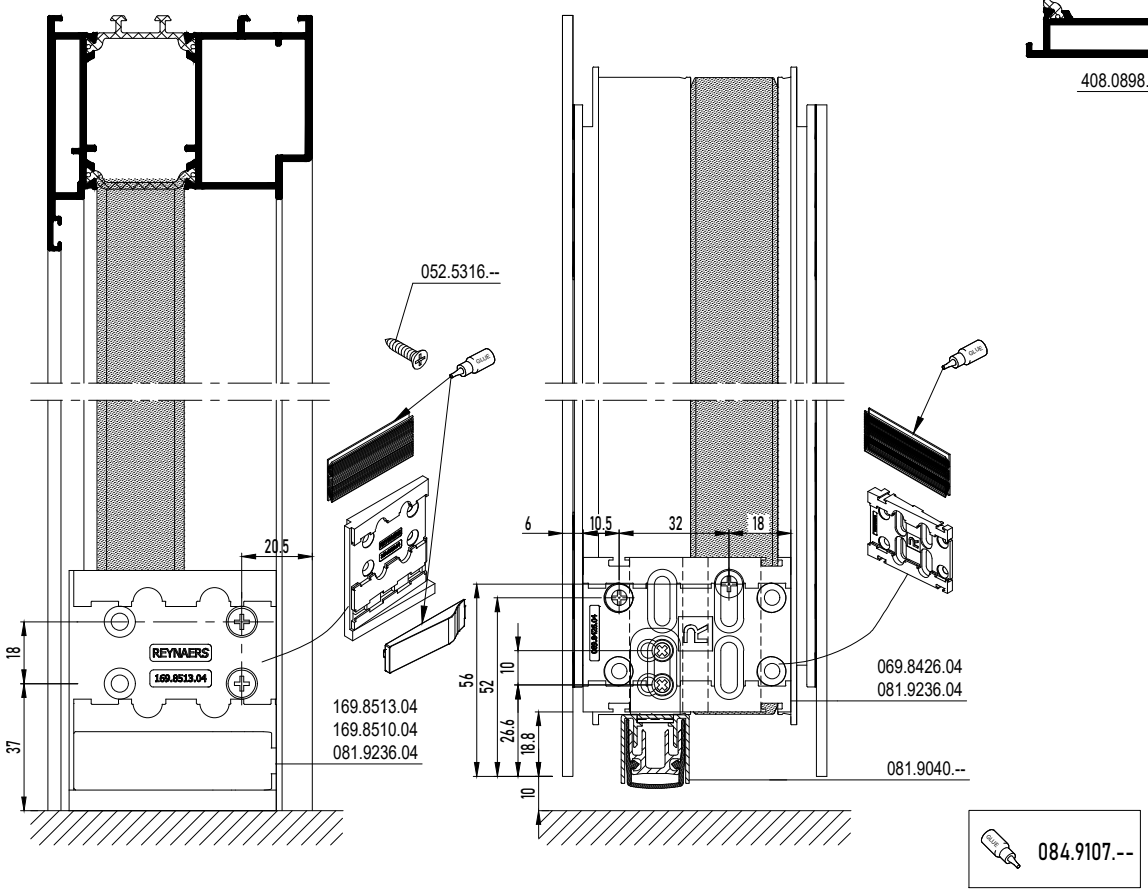

PANEL DOOR DOUBLE SIDED AUTOMATIC SEALING INWARD OPENING

PANEL DOOR DOUBLE SIDED INWARD OPENING WITH AUTOMATIC DRAUGHT EXCLUDER

MASTERLINE 8-Fu

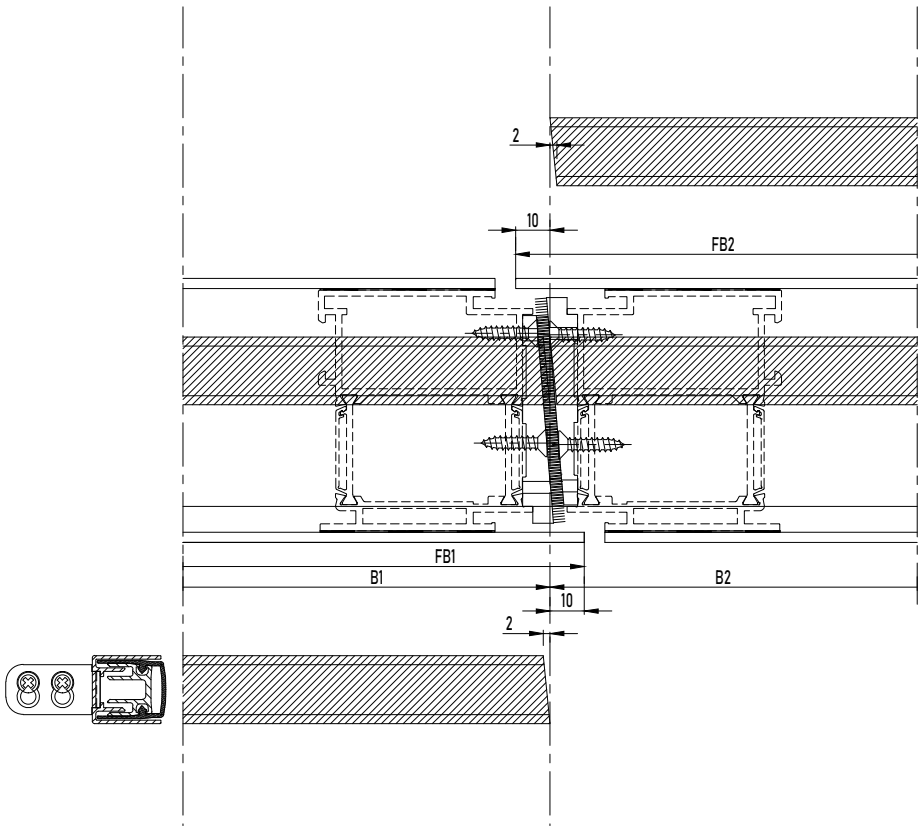

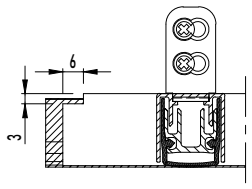



081.9036.--
081.9037.--
081.9038.--
081.9039.--
081.9040.--
081.9041.--
081.9042.--
081.9050.--

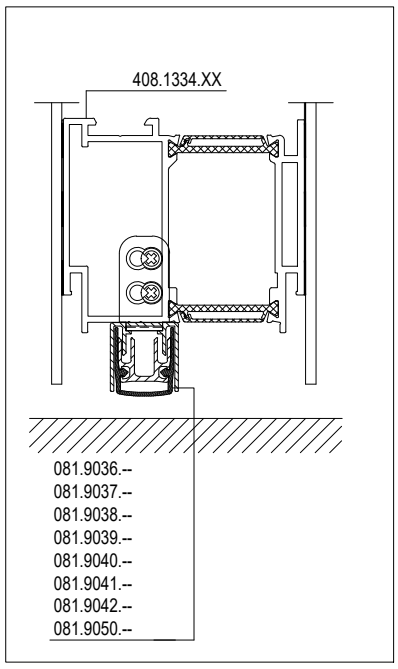

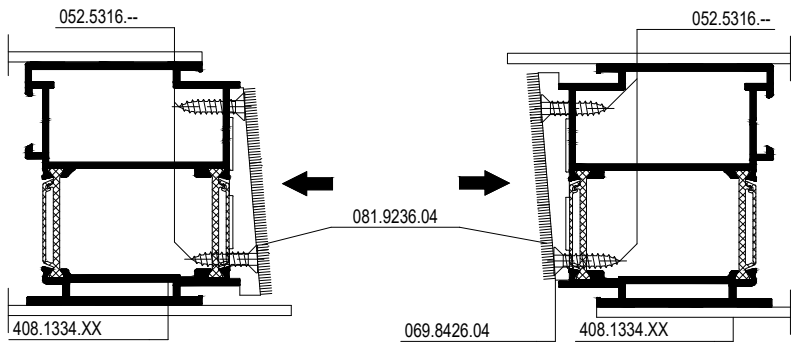

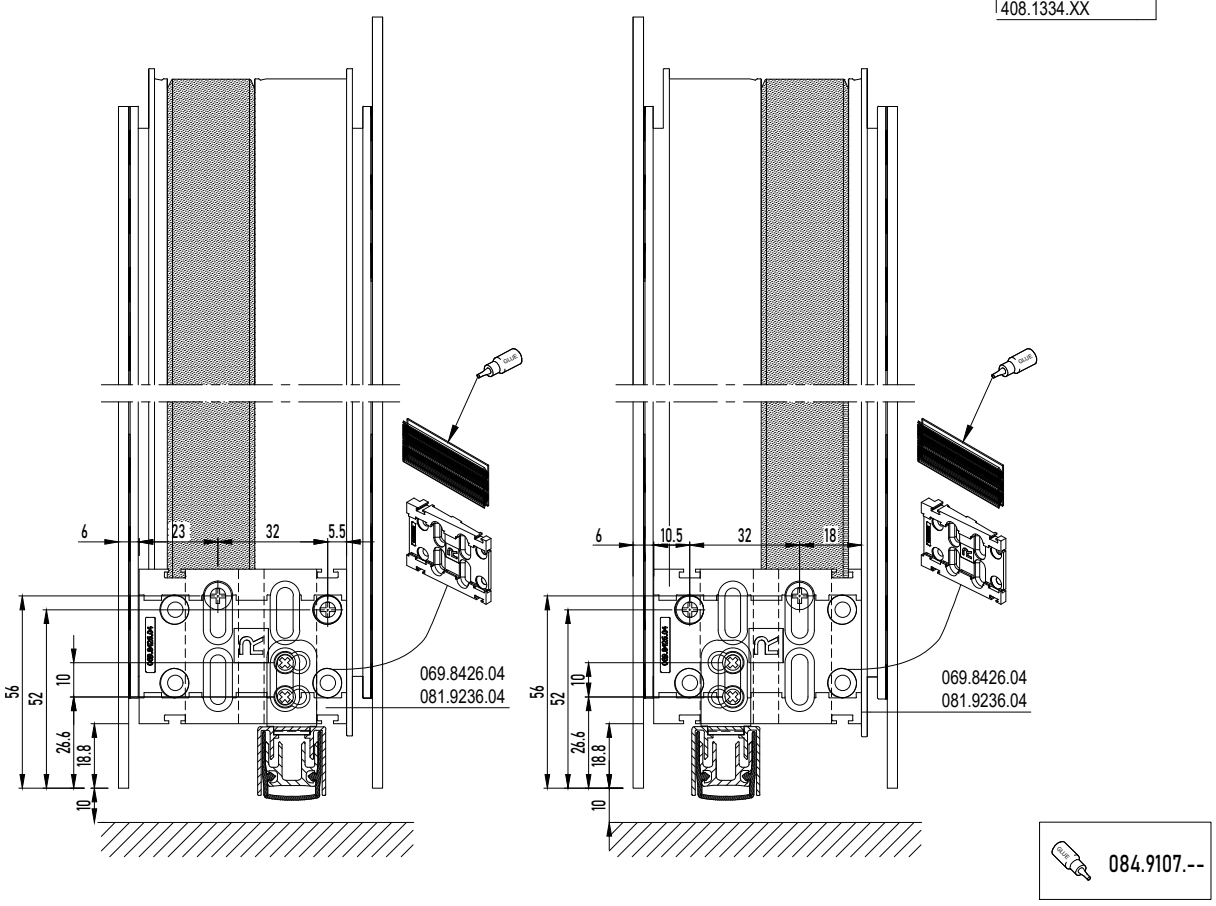

084.9107.--

PANEL DOOR BRUSH OUTWARD OPENING

PANEL DOOR OUTWARD OPENING WITH BRUSH

MASTERLINE 8-Fu

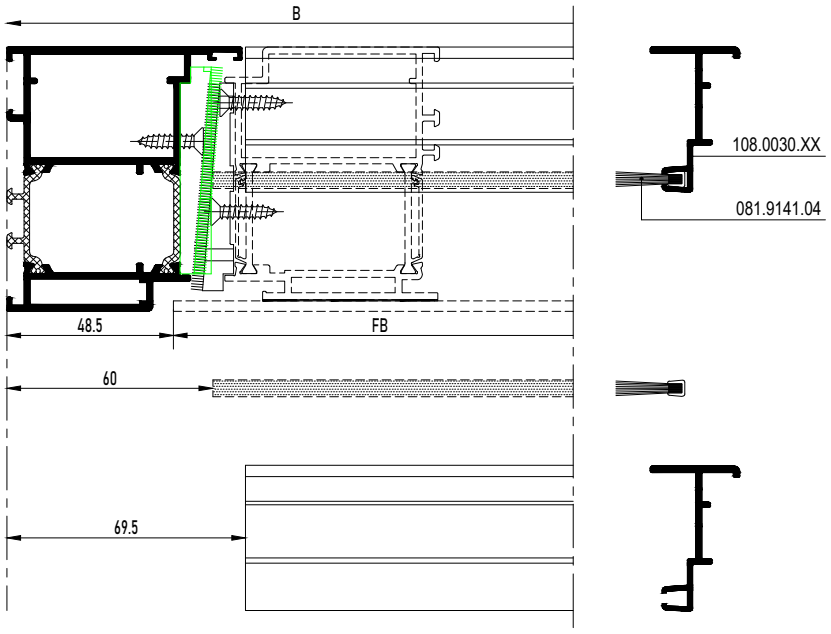

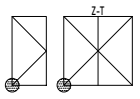

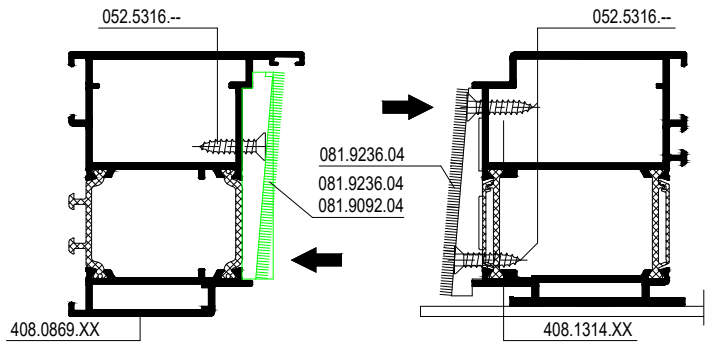

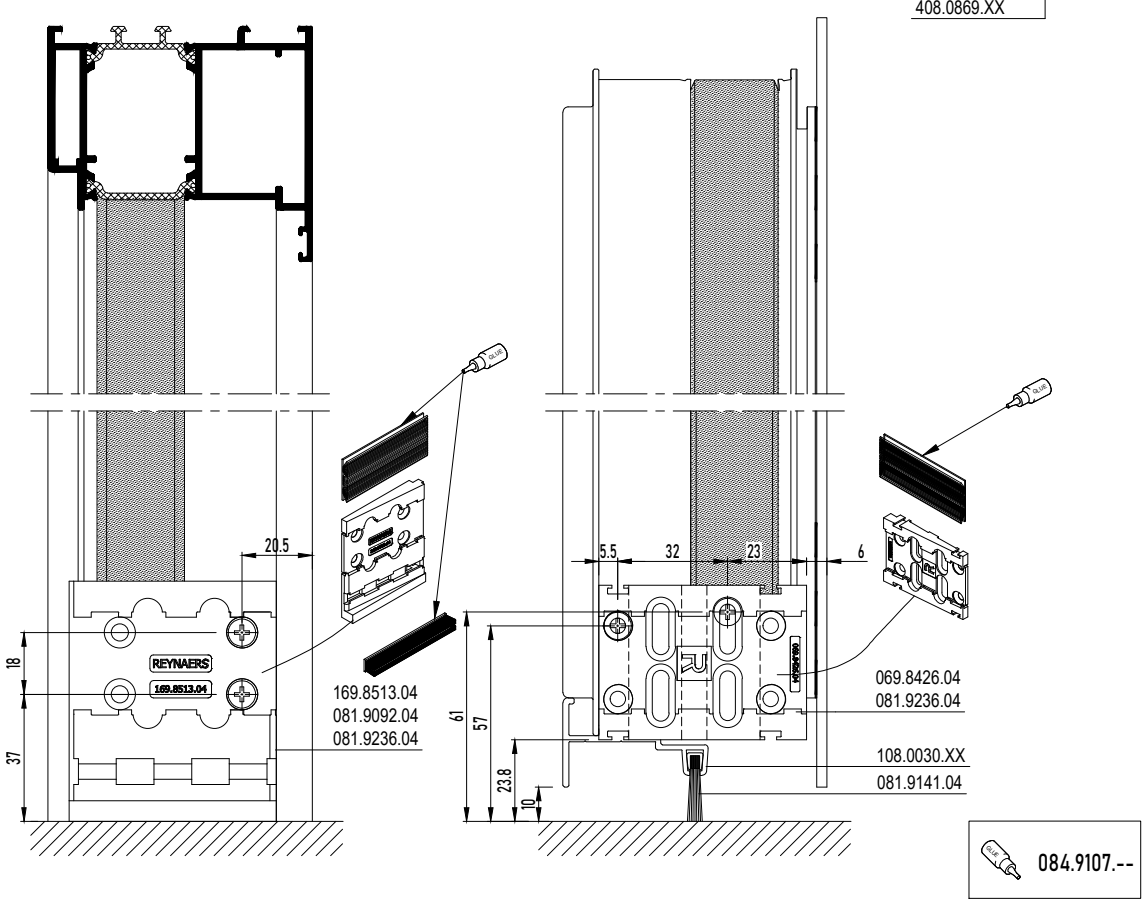

PANEL DOOR BRUSH OUTWARD OPENING

PANEL DOOR OUTWARD OPENING WITH BRUSH

MASTERLINE 8-Fu



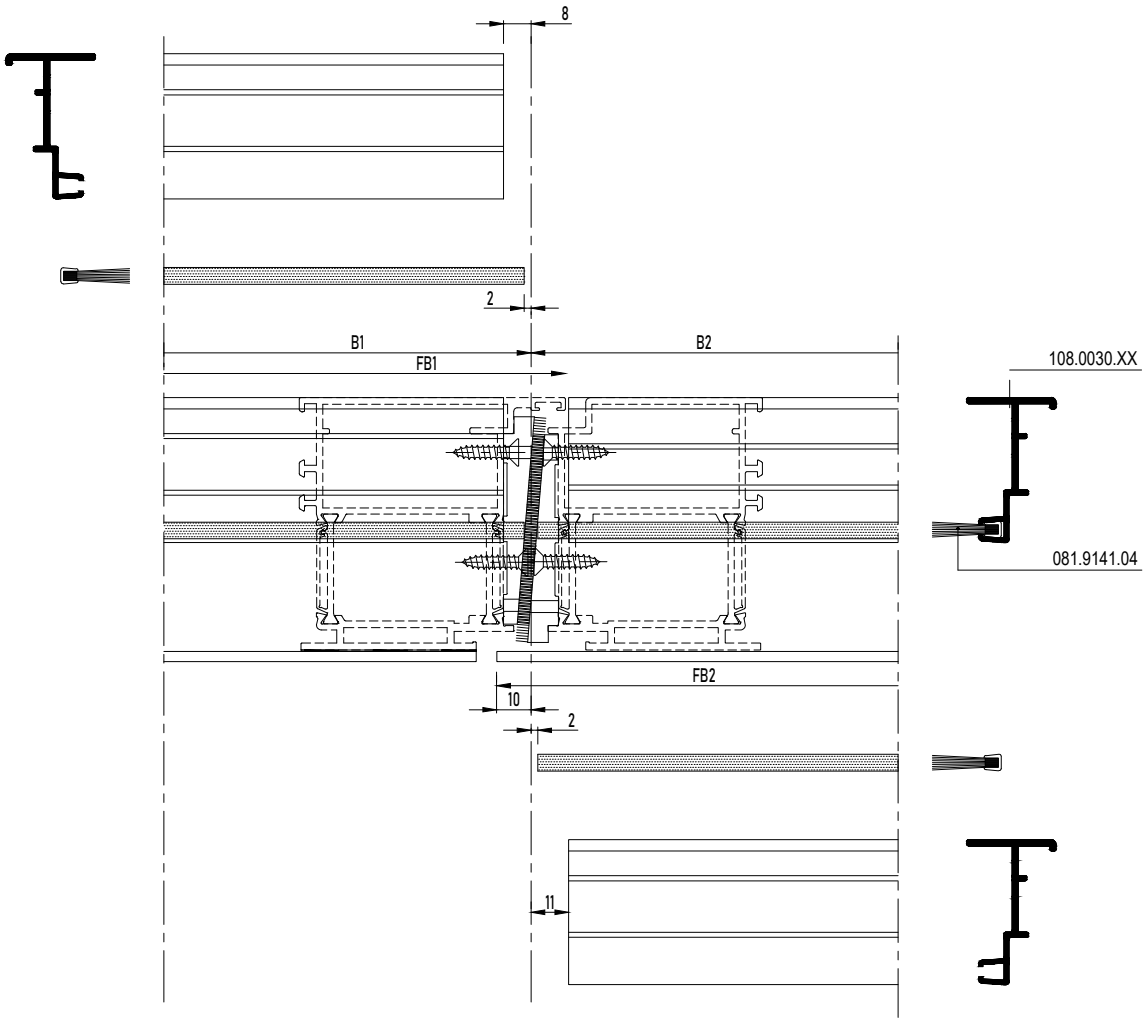

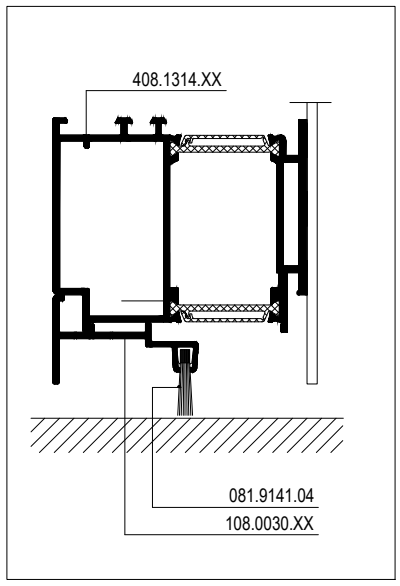

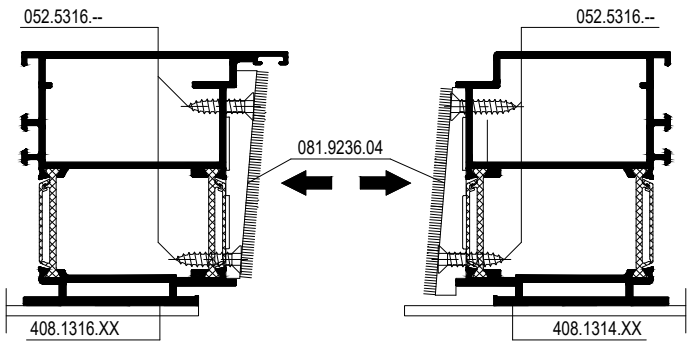

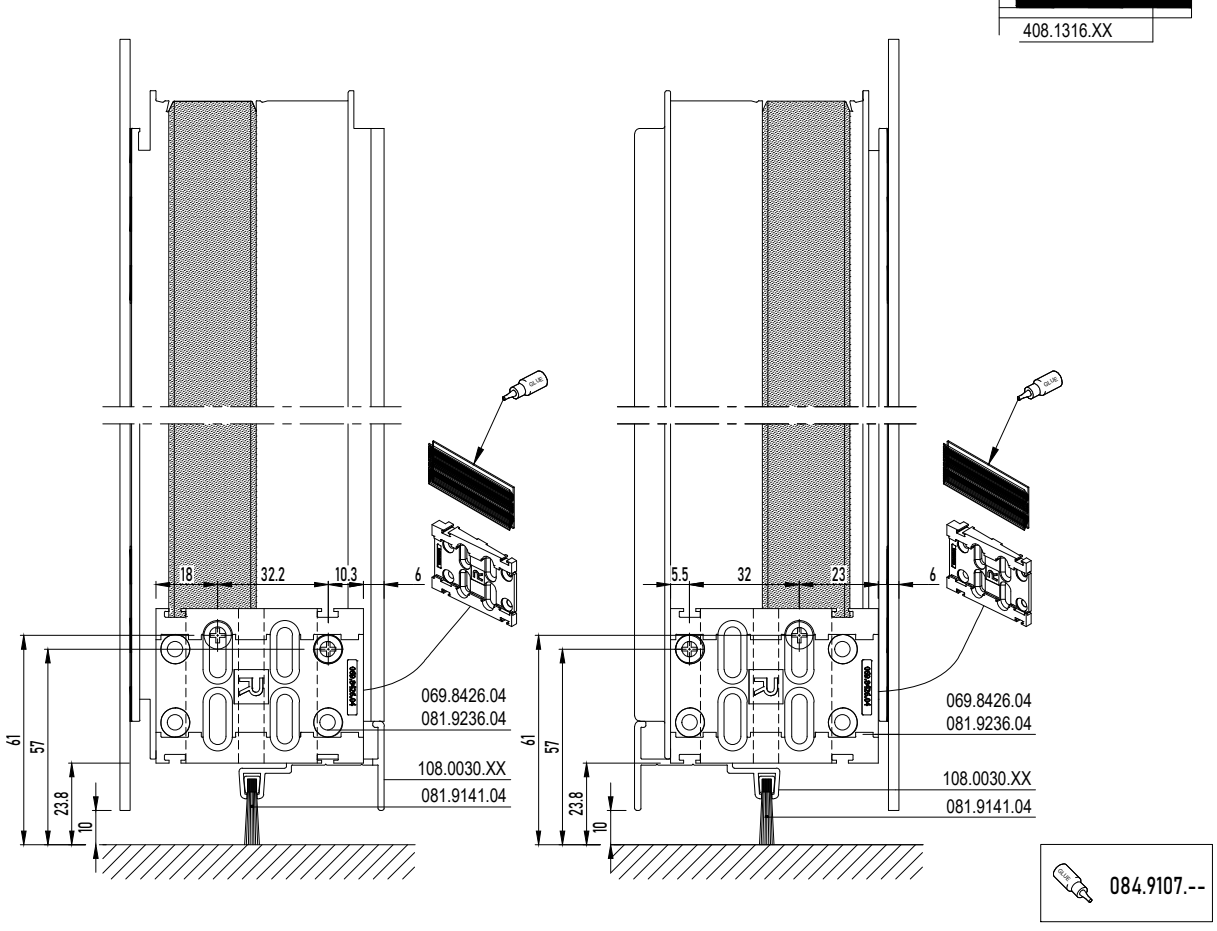



PANEL DOOR WEATHER STRIP OUTWARD OPENING

PANEL DOOR OUTW. OPENING WITH DOUBLE WEATHER STRIP

MASTERLINE 8-Fu

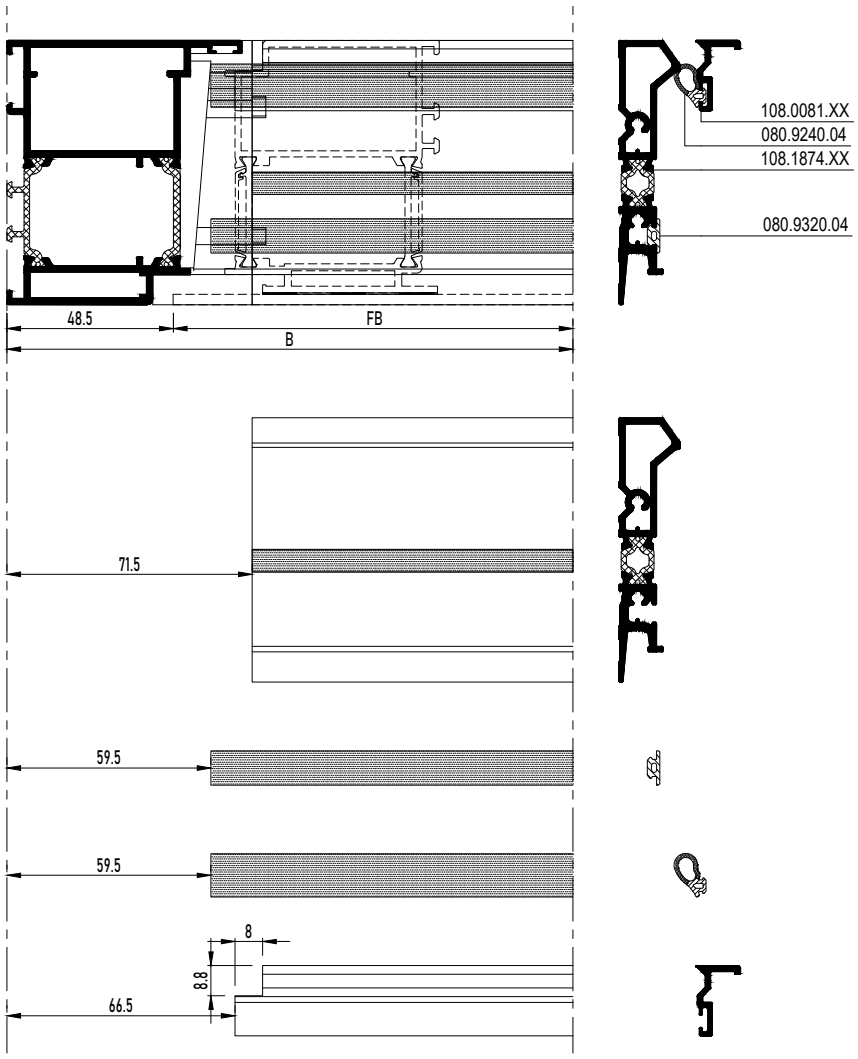

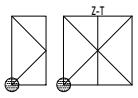

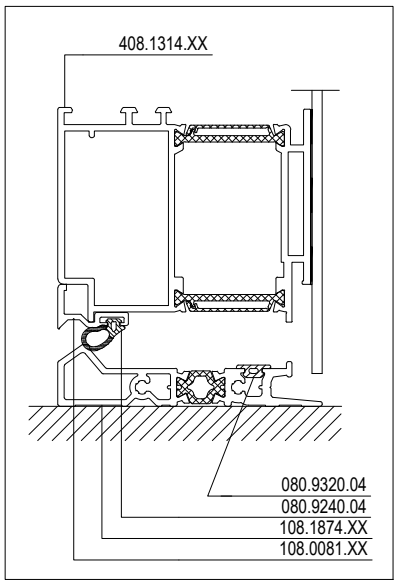

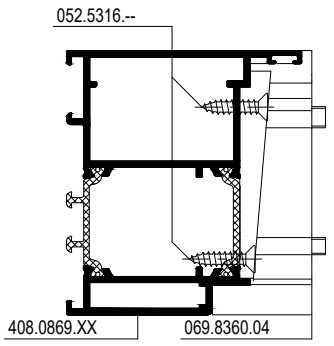

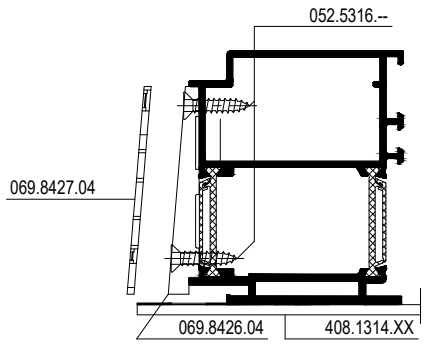

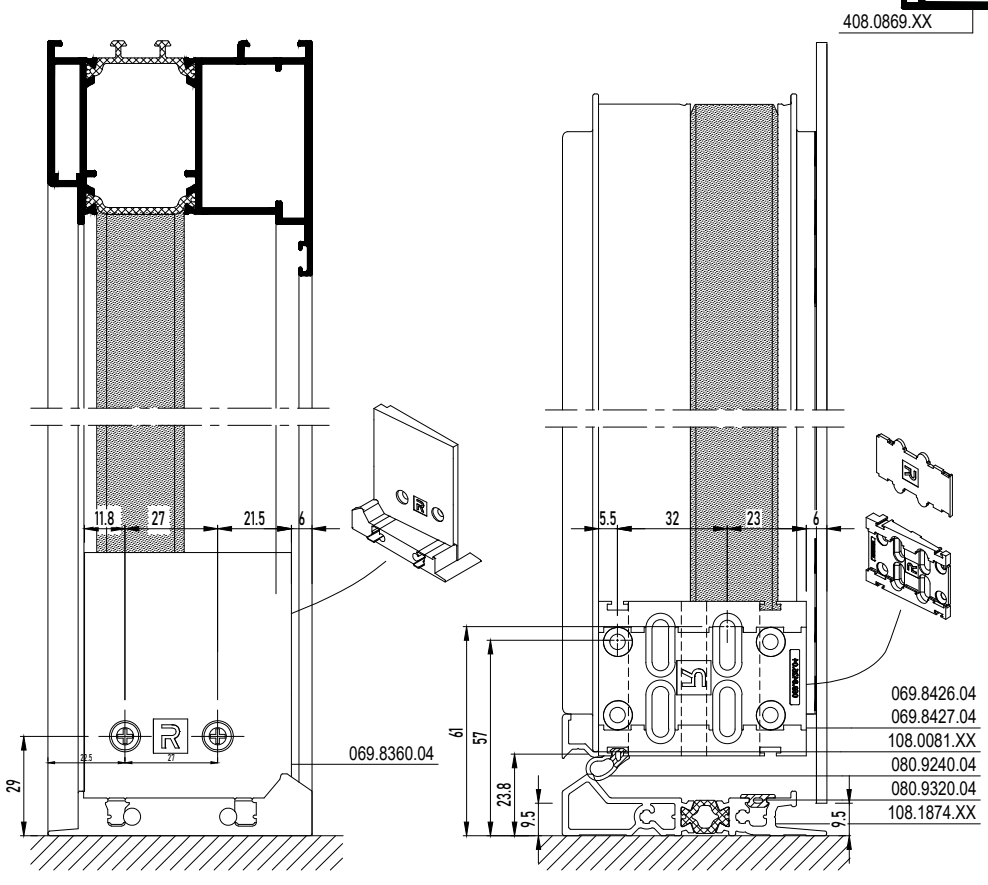



PANEL DOOR WEATHER STRIP OUTWARD OPENING

PANEL DOOR OUTW. OPENING WITH DOUBLE WEATHER STRIP

MASTERLINE 8-Fu

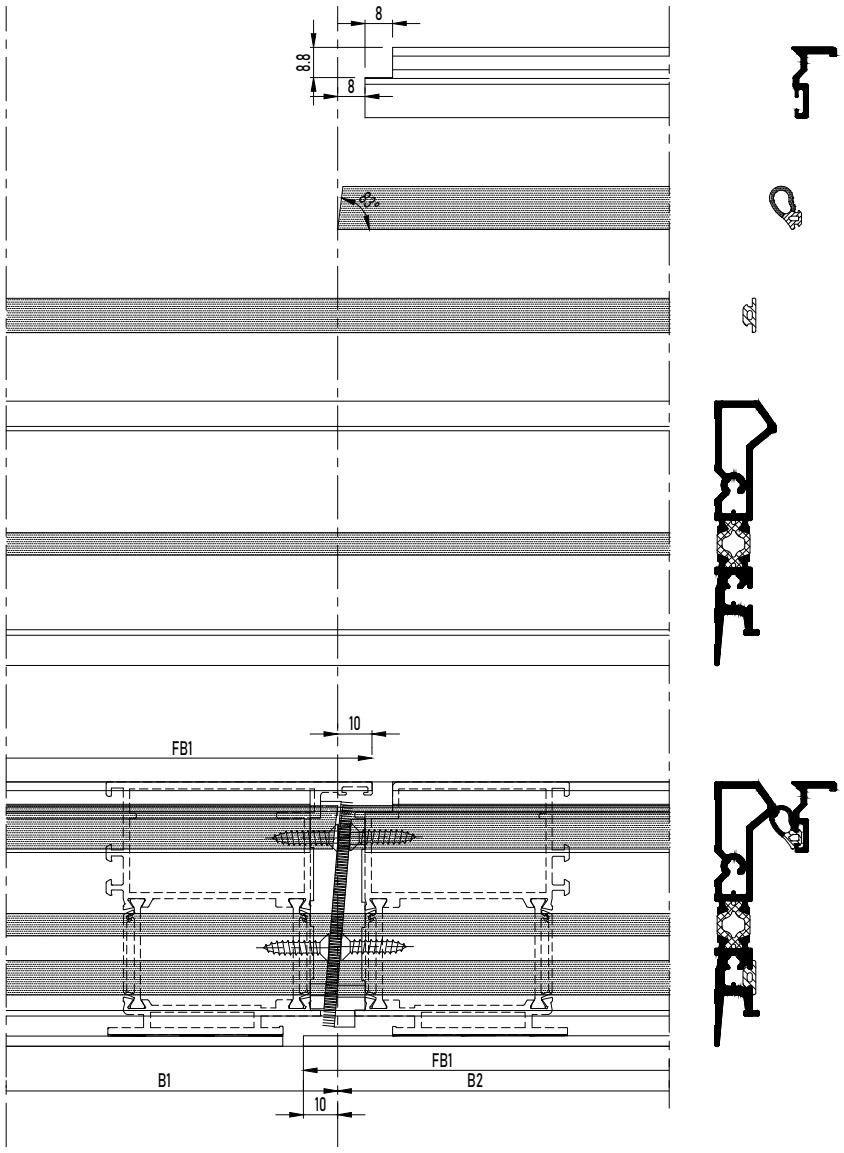



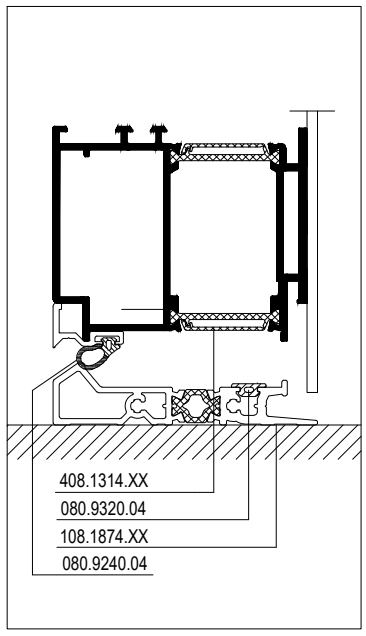

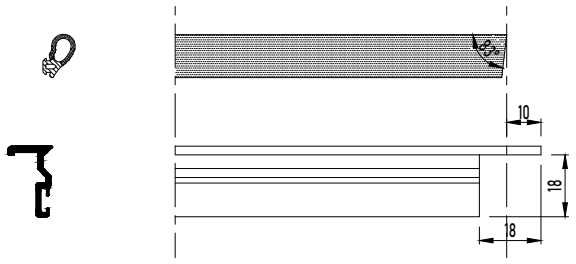

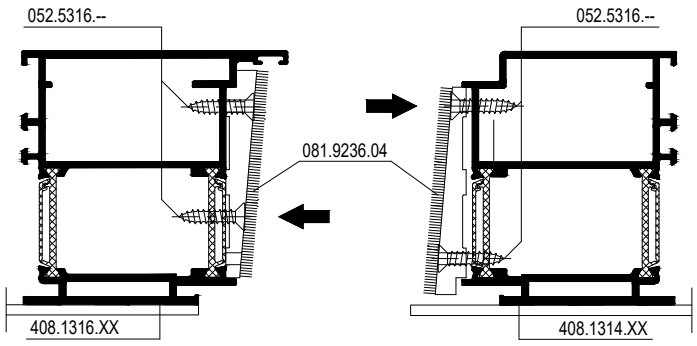

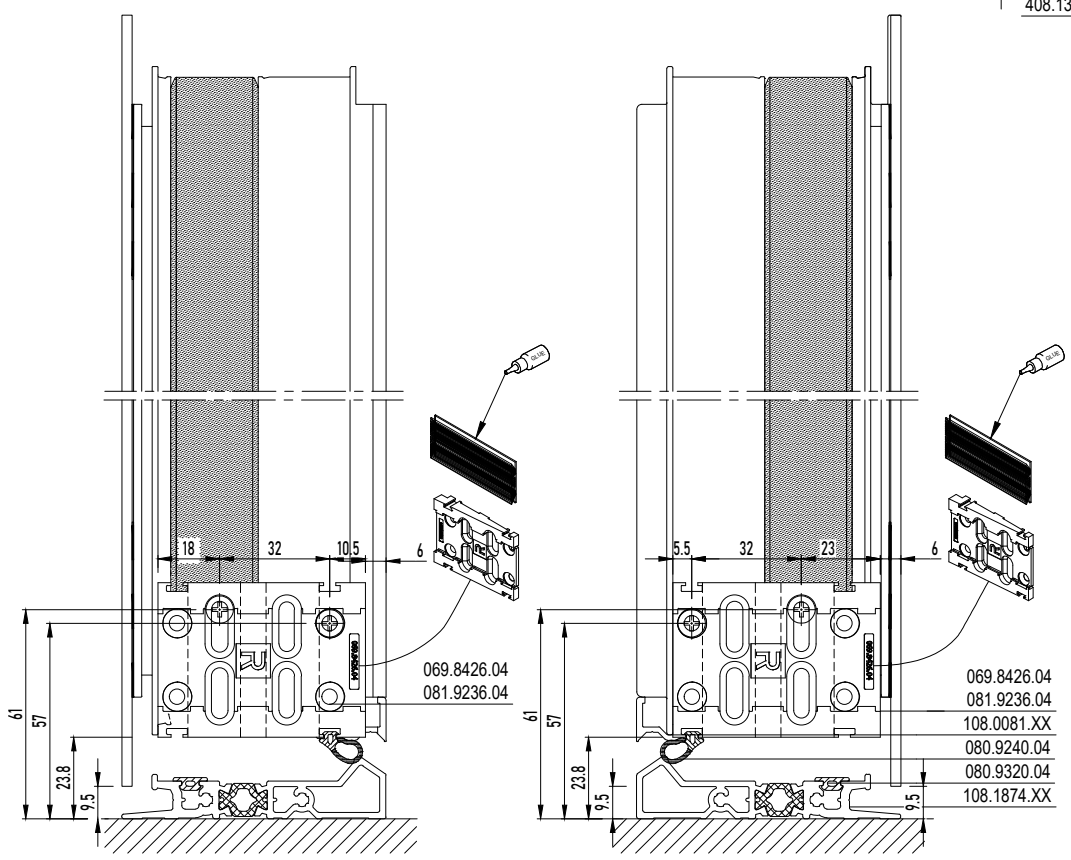





PANEL DOOR WEATHER STRIP OUTWARD OPENING

PANEL DOOR DOUBLE SIDED OUTWARD OPENING WITH DOUBLE WEATHER STRIP

MASTERLINE 8-Fu

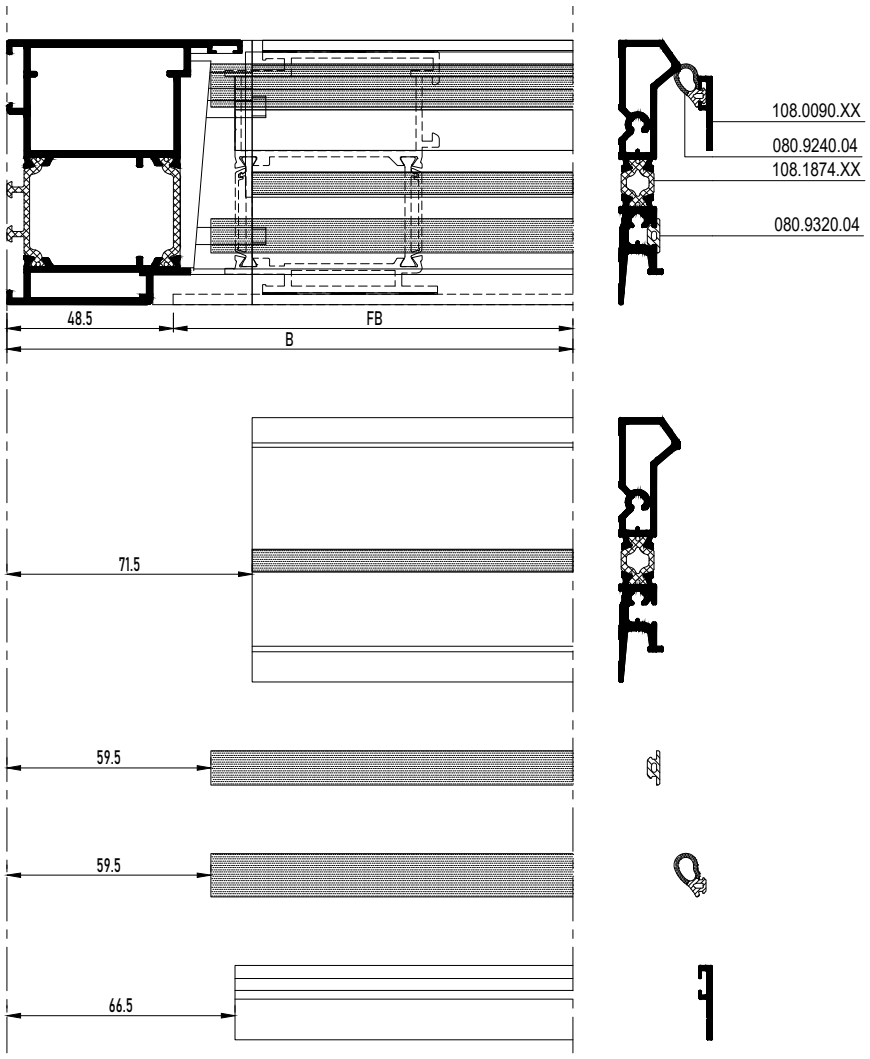

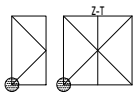

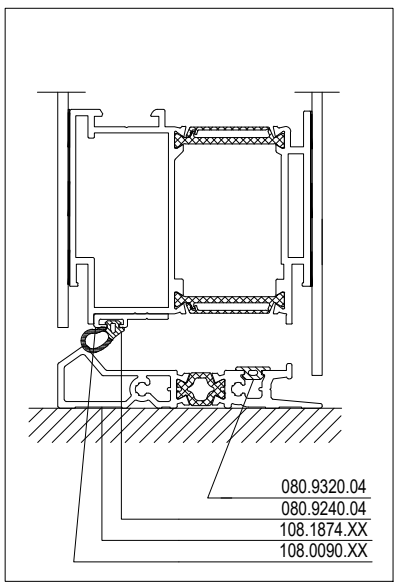

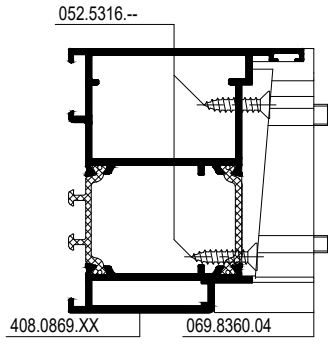

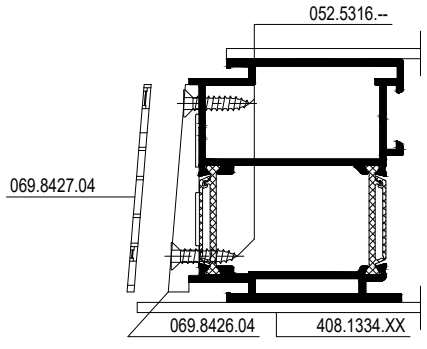

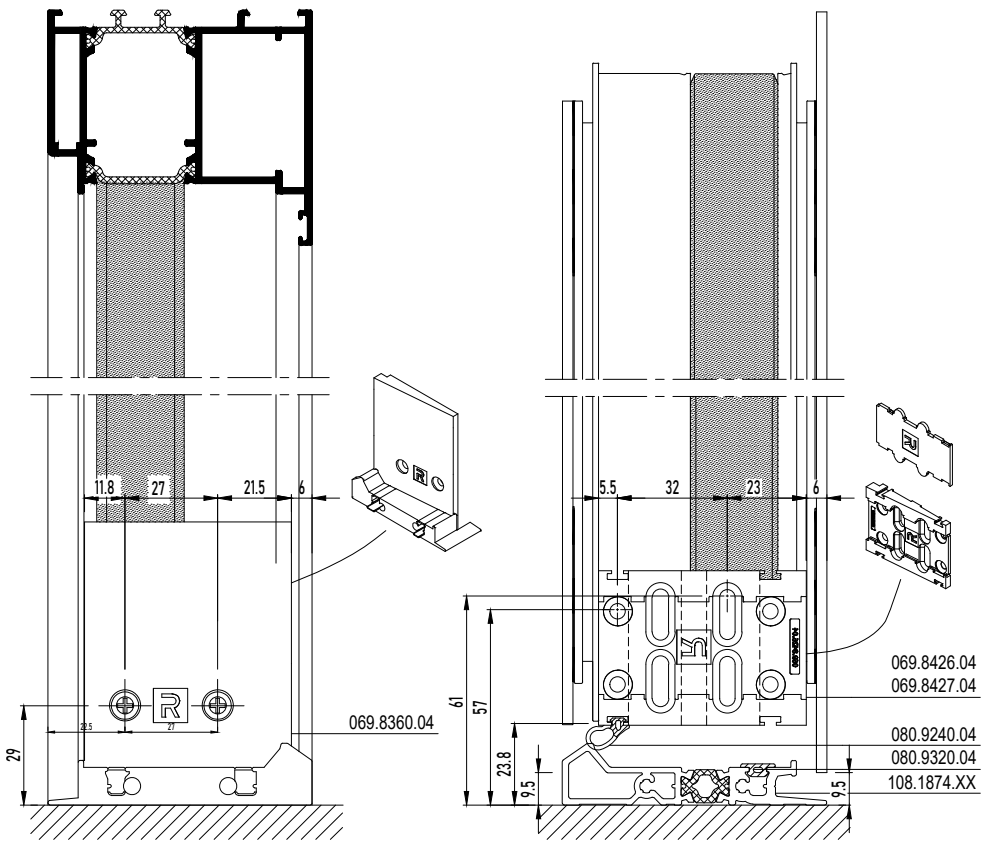



PANEL DOOR WEATHER STRIP OUTWARD OPENING

PANEL DOOR DOUBLE SIDED OUTWARD OPENING WITH DOUBLE WEATHER STRIP

MASTERLINE 8-Fu

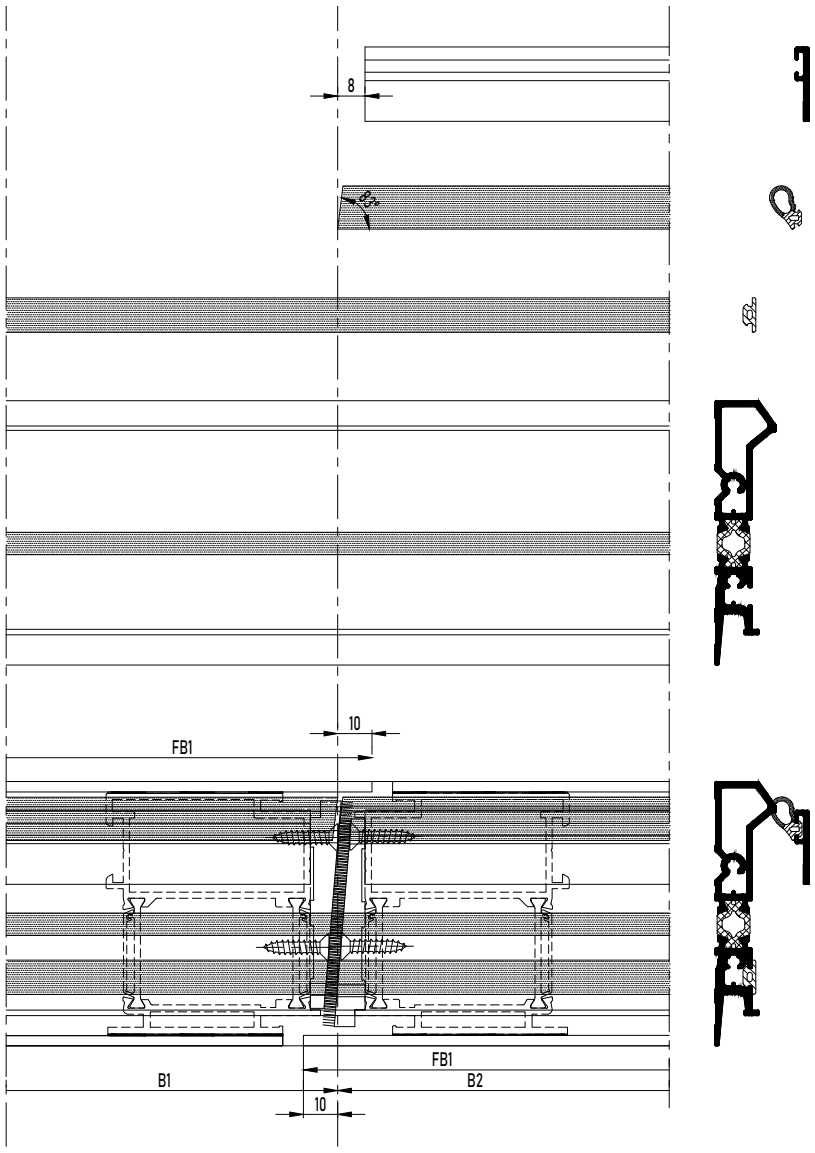



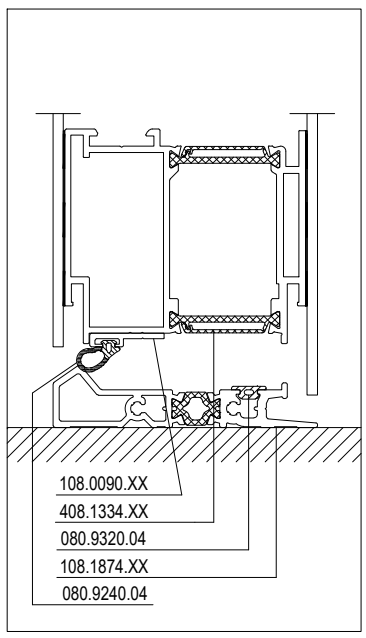

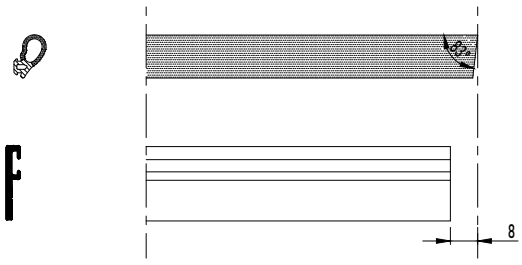

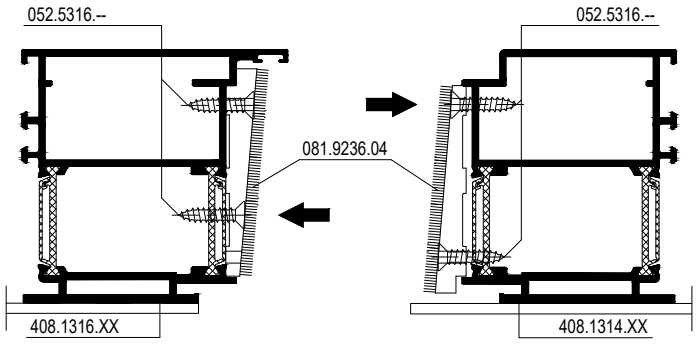

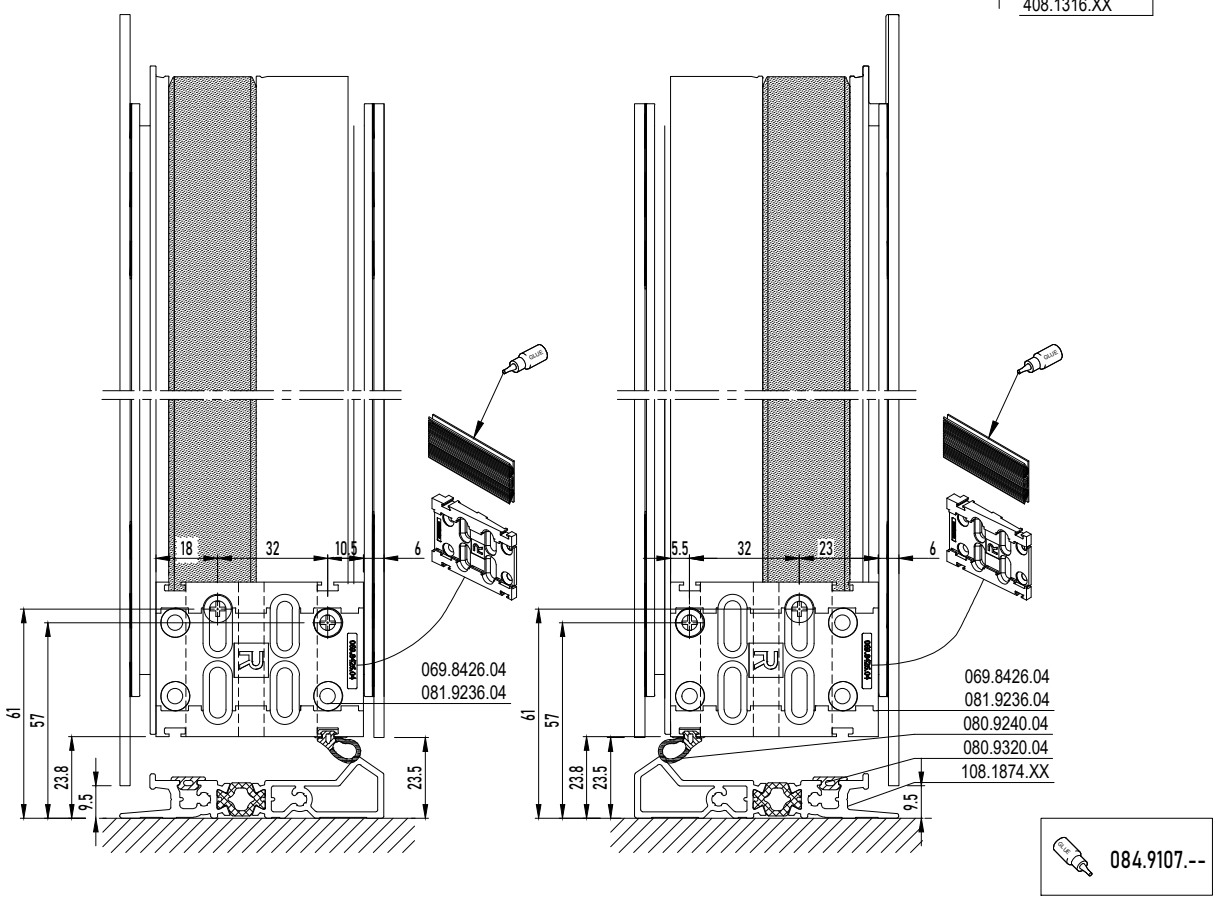



PANEL DOOR DOUBLE SIDED BRUSH OUTWARD OPENING

PANEL DOOR DOUBLE SIDED OUTWARD OPENING WITH BRUSH

MASTERLINE 8-Fu

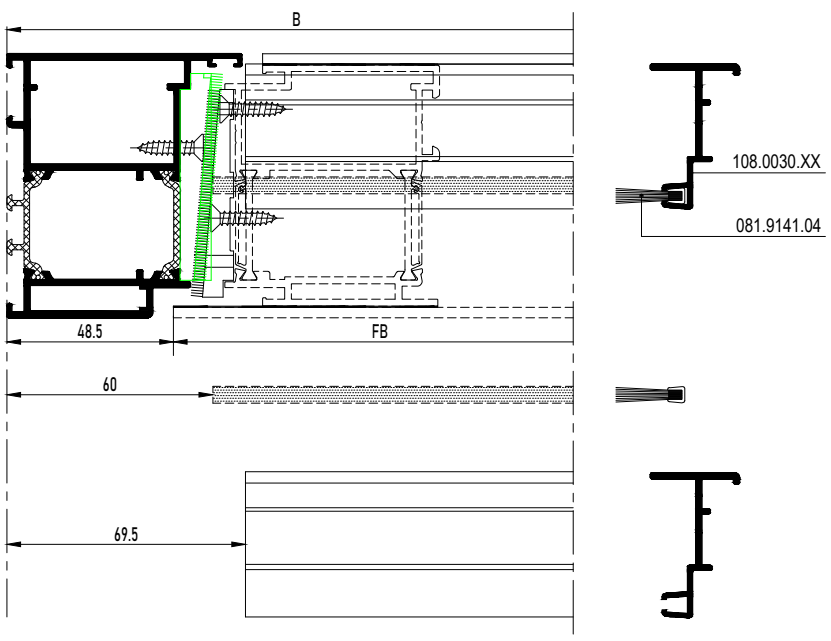

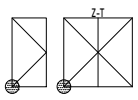

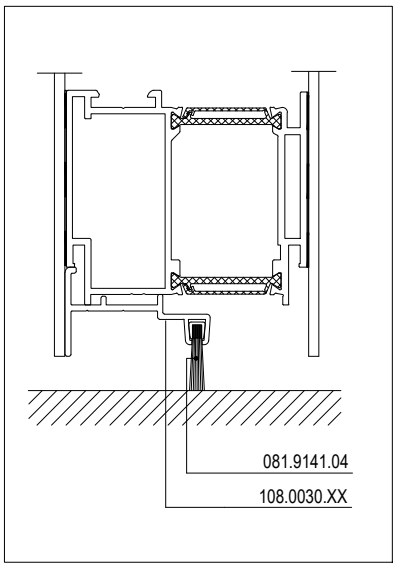

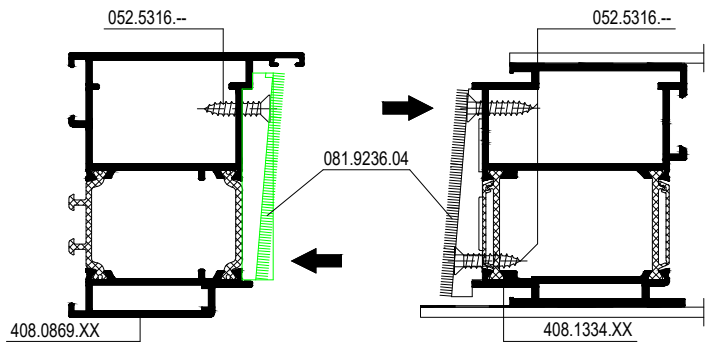

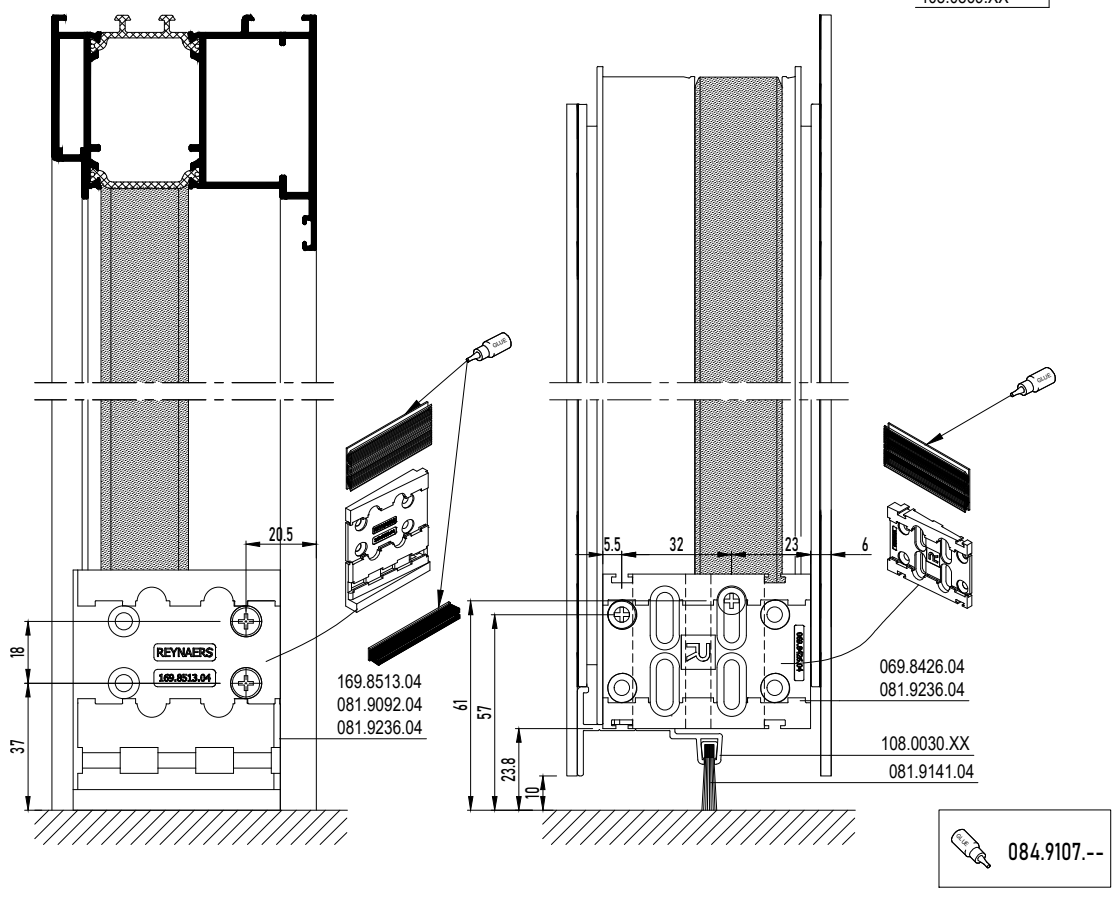

PANEL DOOR DOUBLE SIDED BRUSH OUTWARD OPENING

PANEL DOOR DOUBLE SIDED OUTWARD OPENING WITH BRUSH

MASTERLINE 8-Fu

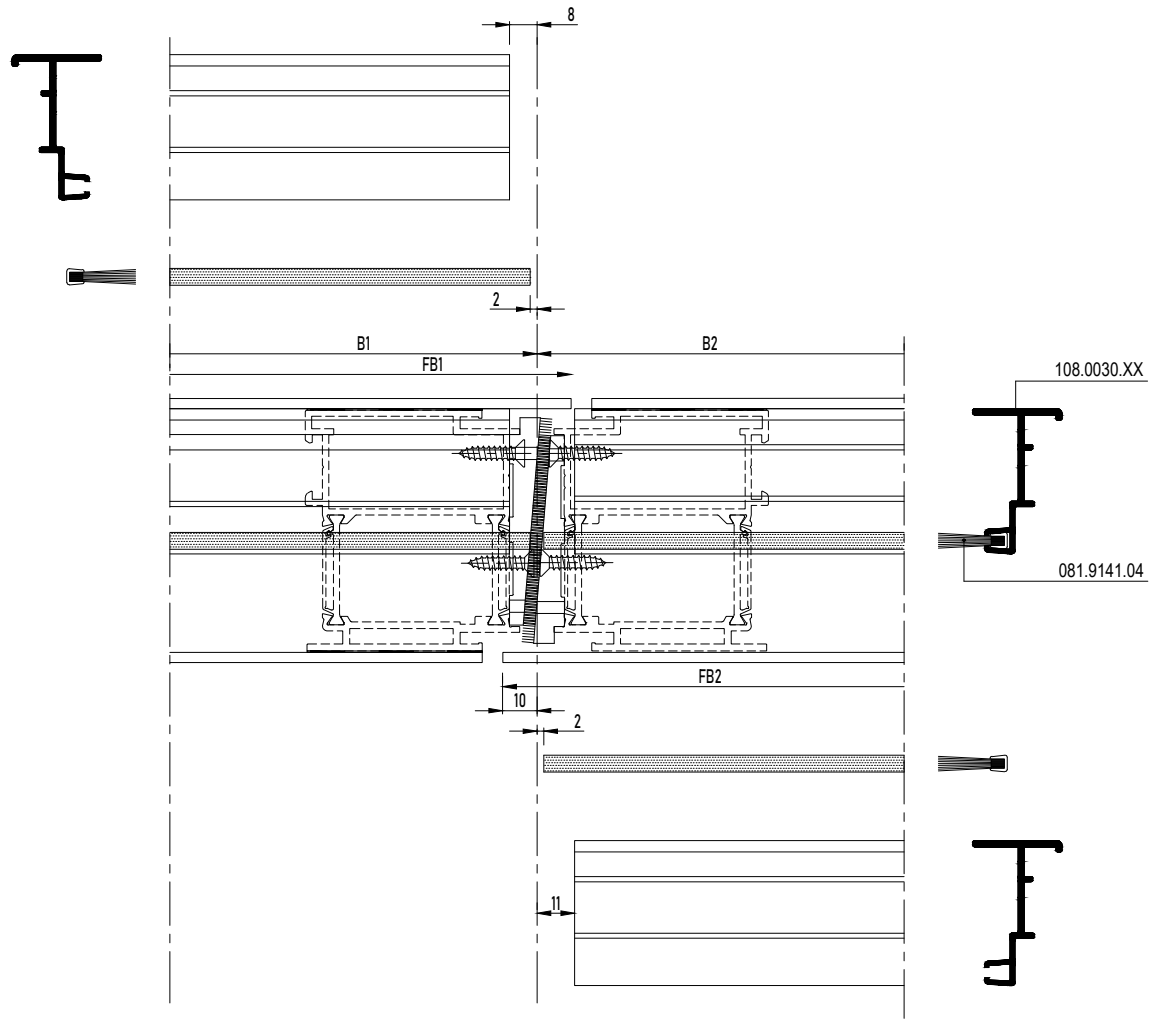



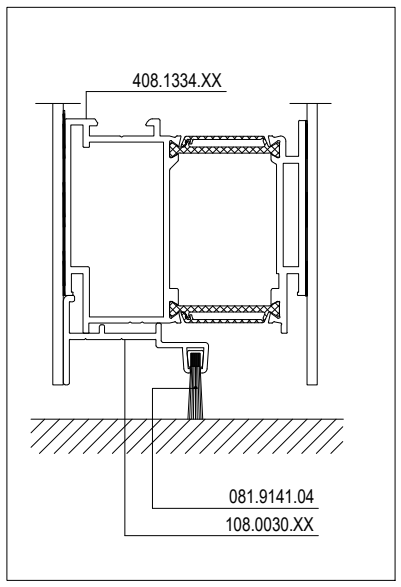

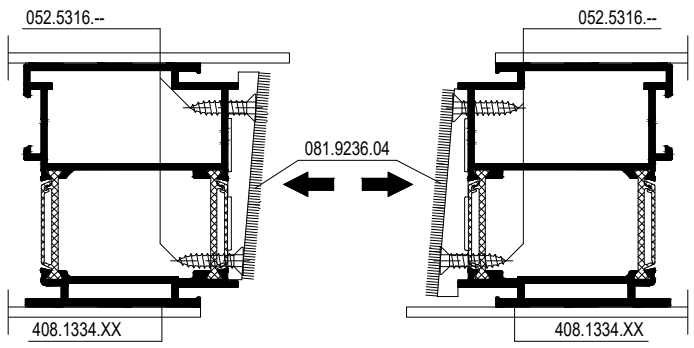

PANEL DOOR DOUBLE SIDED AUTOMATIC SEALING OUTWARD OPENING

PANEL DOOR DOUBLE SIDED OUTWARD OPENING WITH AUTOMATIC DRAUGHT EXCLUDER

MASTERLINE 8-Fu

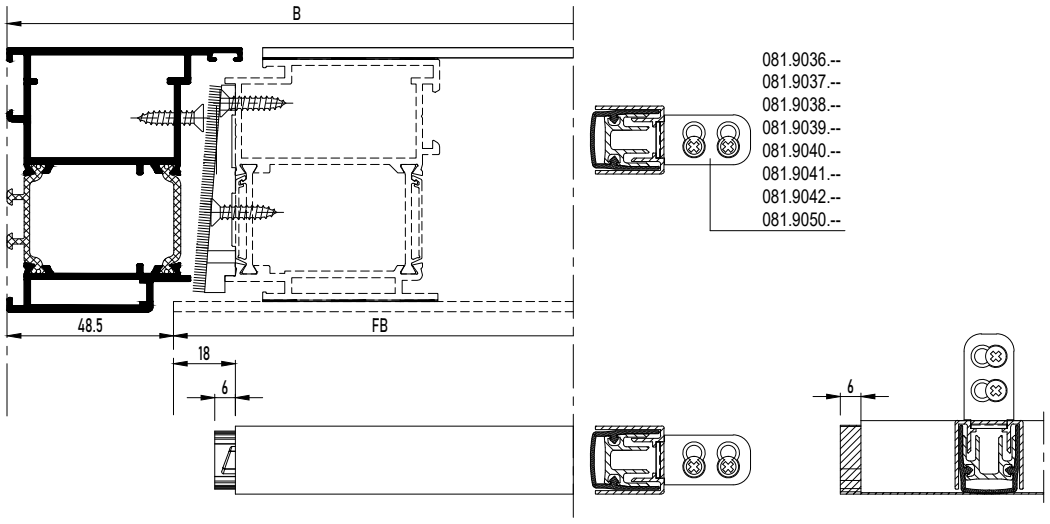

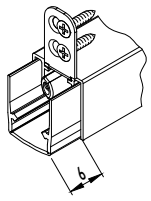

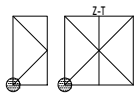

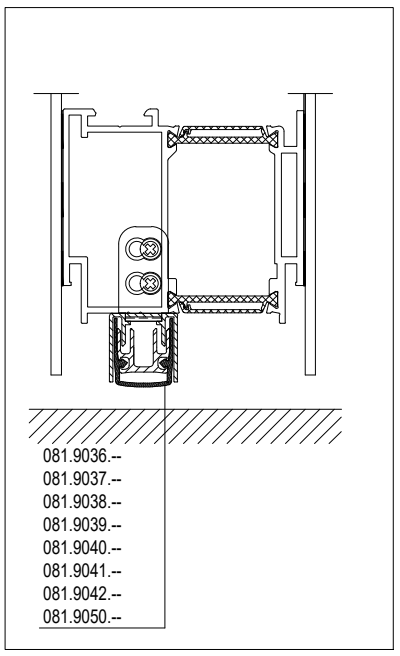

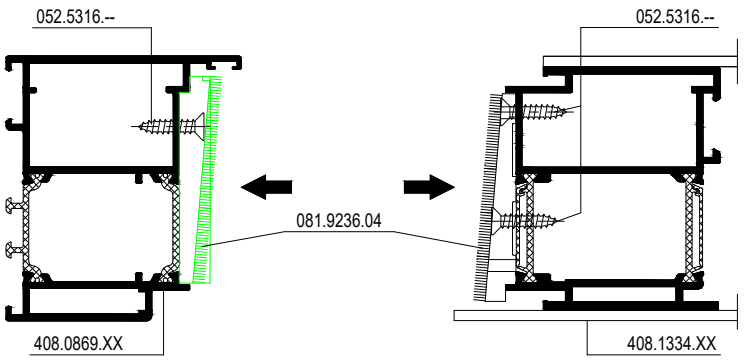

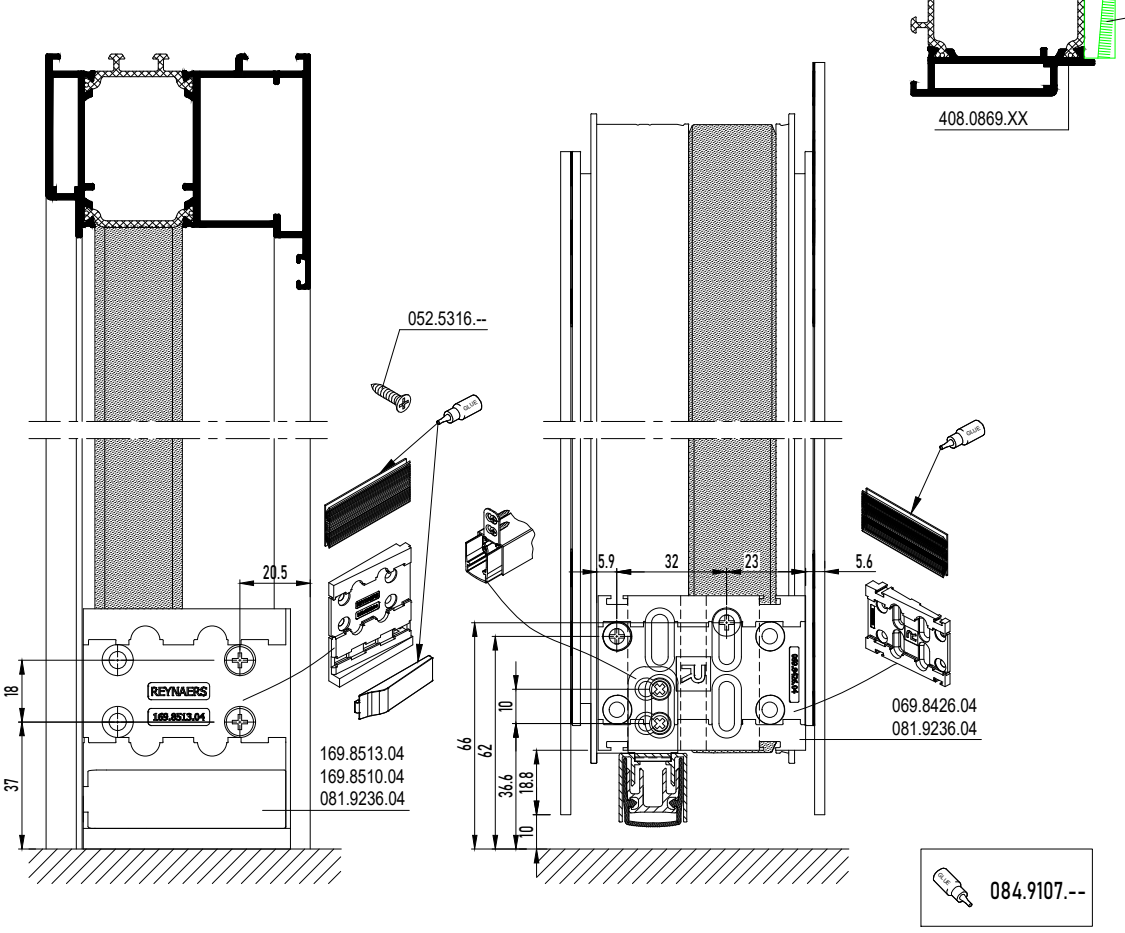

PANEL DOOR DOUBLE SIDED AUTOMATIC SEALING OUTWARD OPENING

PANEL DOOR DOUBLE SIDED OUTWARD OPENING WITH AUTOMATIC DRAUGHT EXCLUDER

MASTERLINE 8-Fu

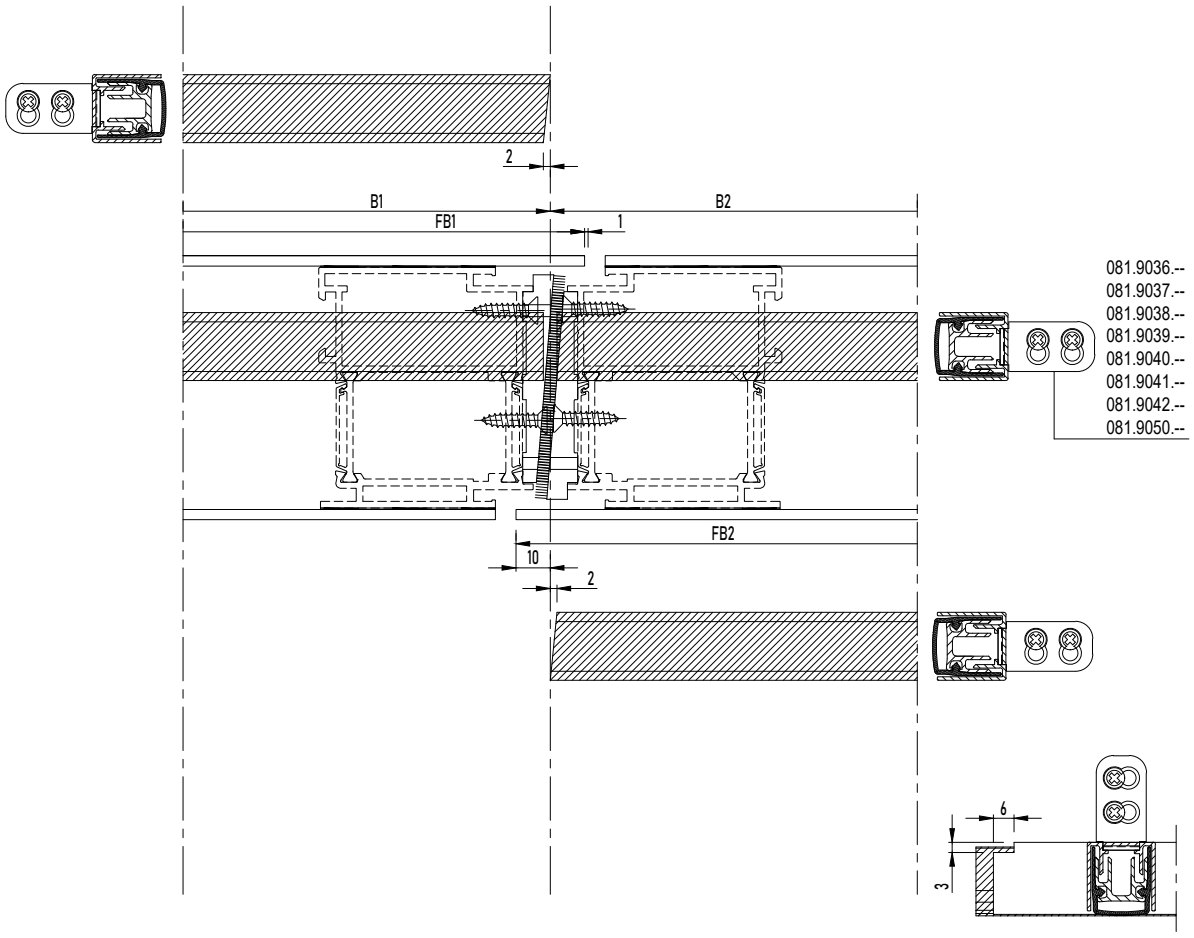



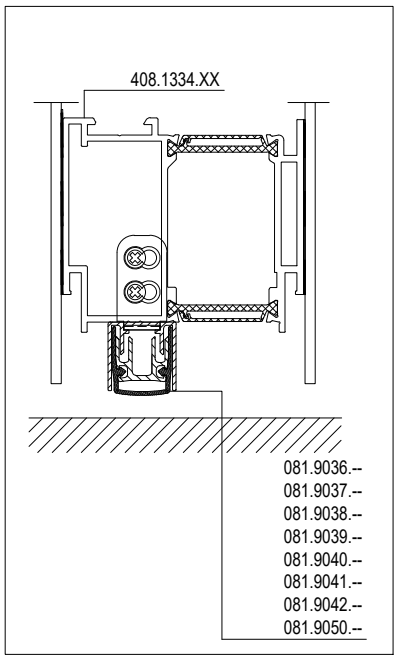

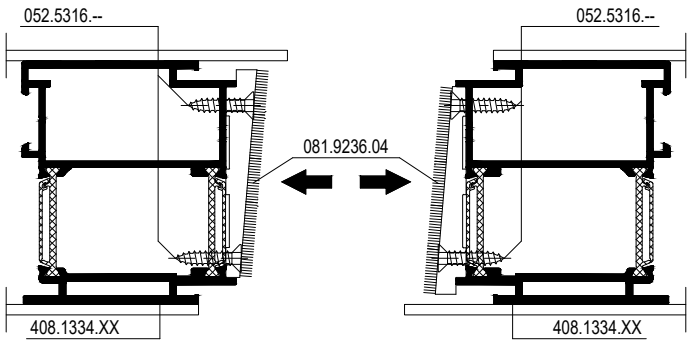

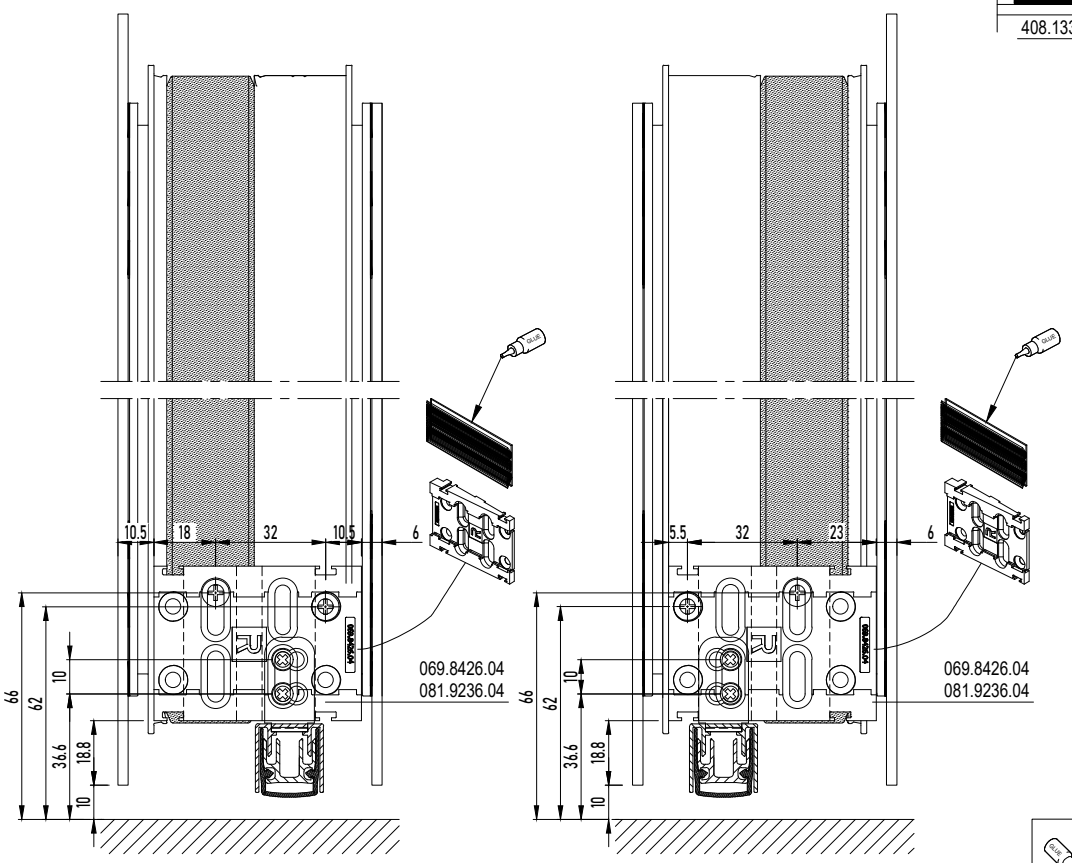



DRAINAGE MC PIVOT DOOR

DRAINAGE PIVOT DOOR

MASTERLINE 8-Fu

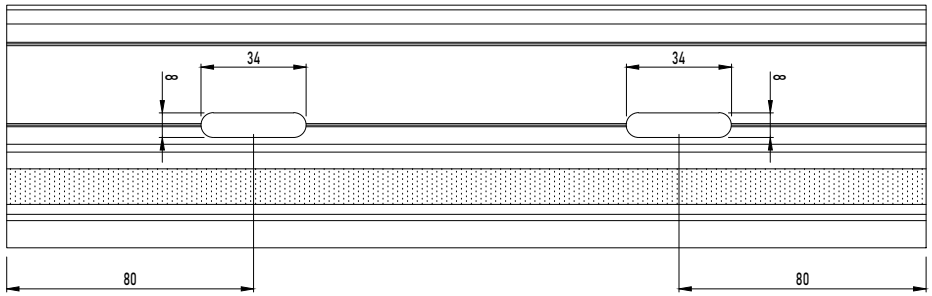

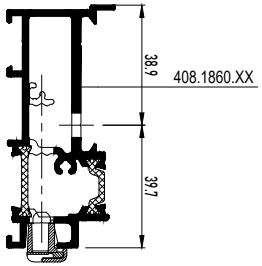

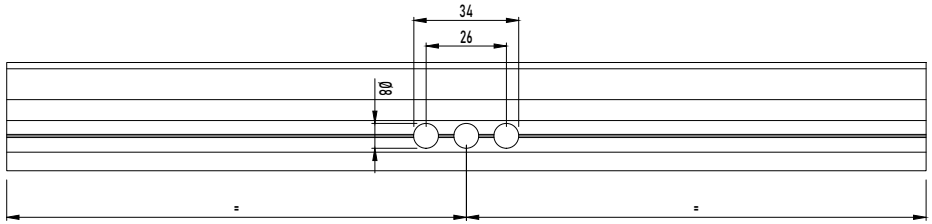

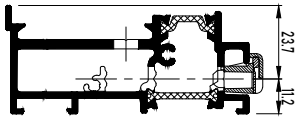

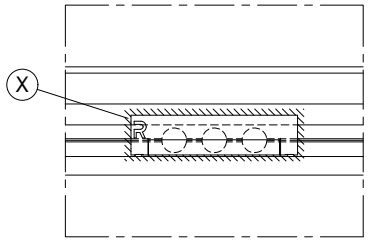

X DICHTINGSMIDDEL
MATIERE D'ETANCHEITE
SEALING AGENT
ABDICHTUNG

DRAINAGE MC PIVOT DOOR

DRAINAGE PIVOT DOOR

MASTERLINE 8-Fu

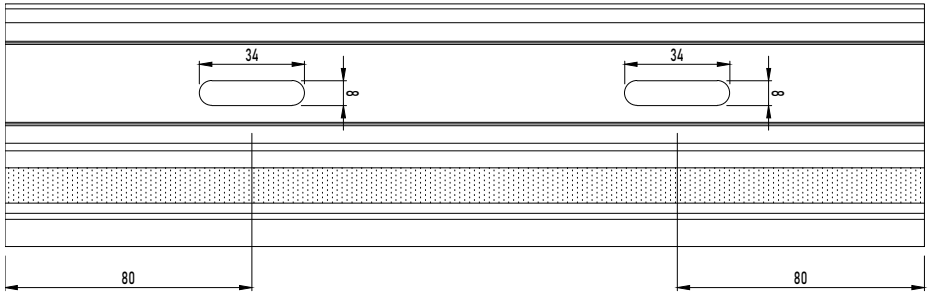

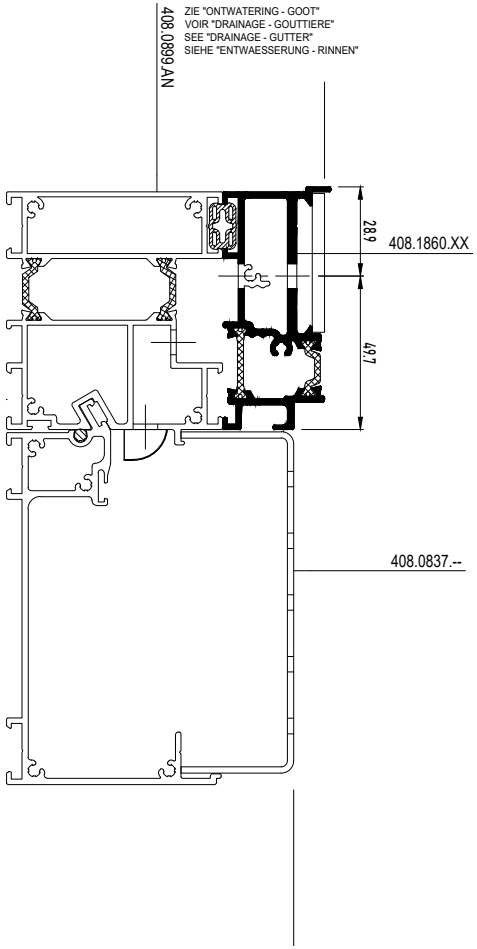

PROFILE COMPOSITION PIVOT DOOR

PROFILE COMPOSITION PIVOT DOOR

MASTERLINE 8-Fu

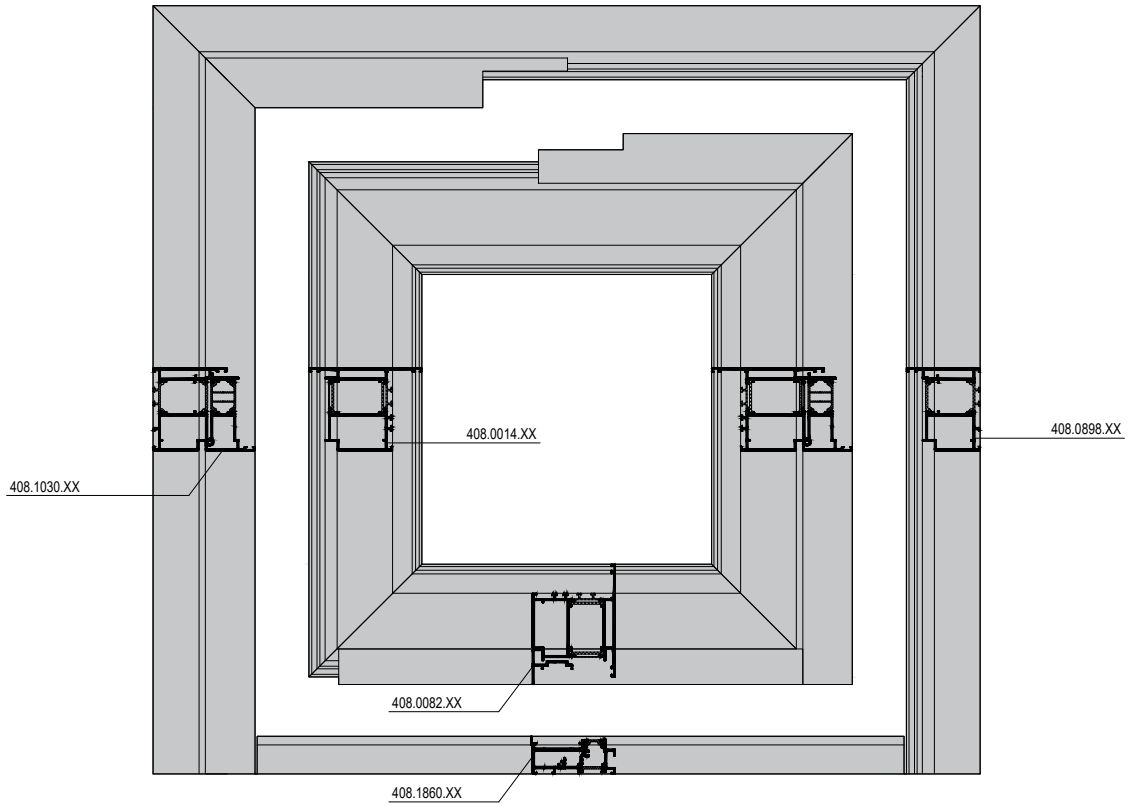

PIVOT DOOR INWARD OPENING

PIVOT DOOR INWARD OPENING

MASTERLINE 8-Fu

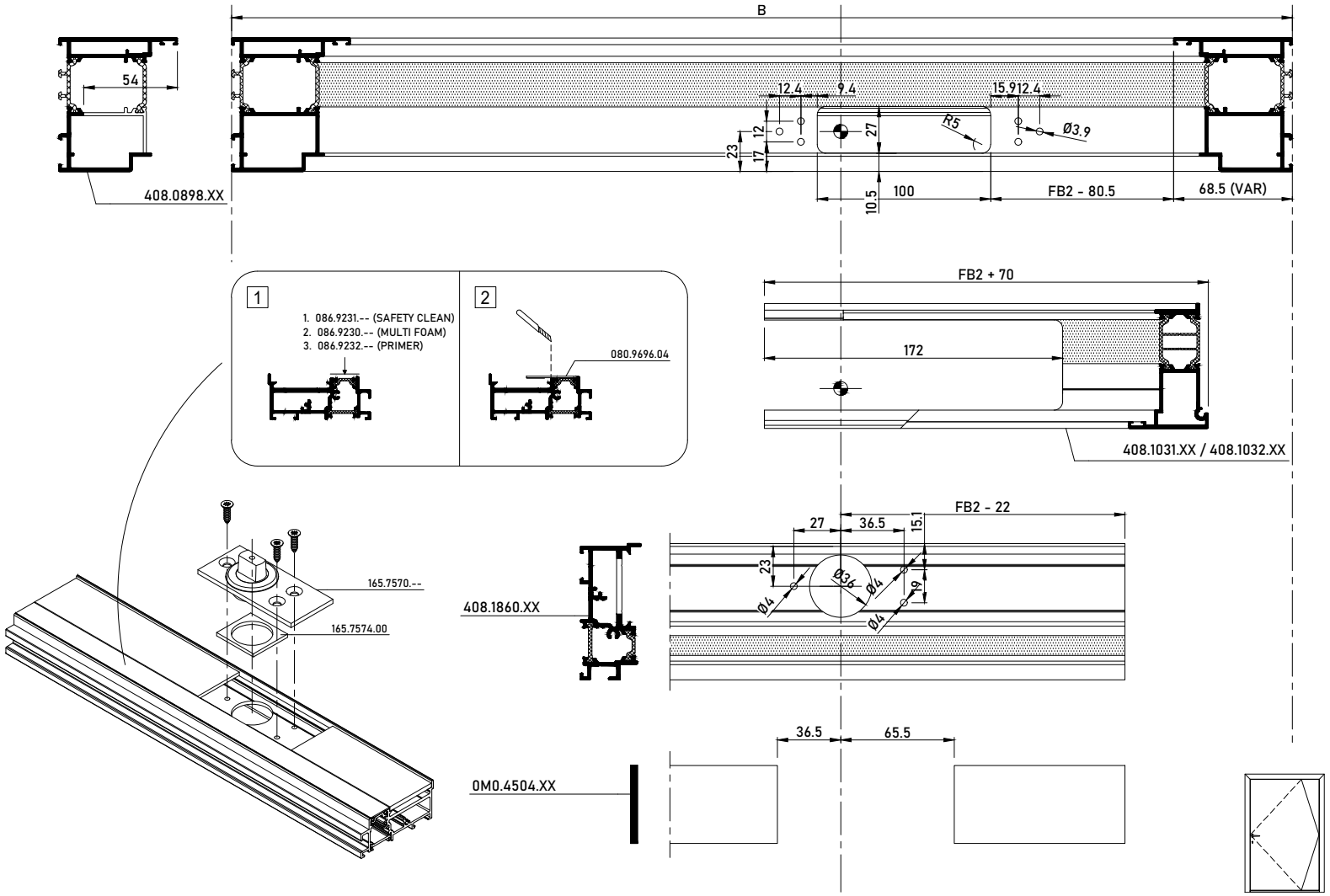

PIVOT DOOR INWARD OPENING

PIVOT DOOR INWARD OPENING

MASTERLINE 8-Fu

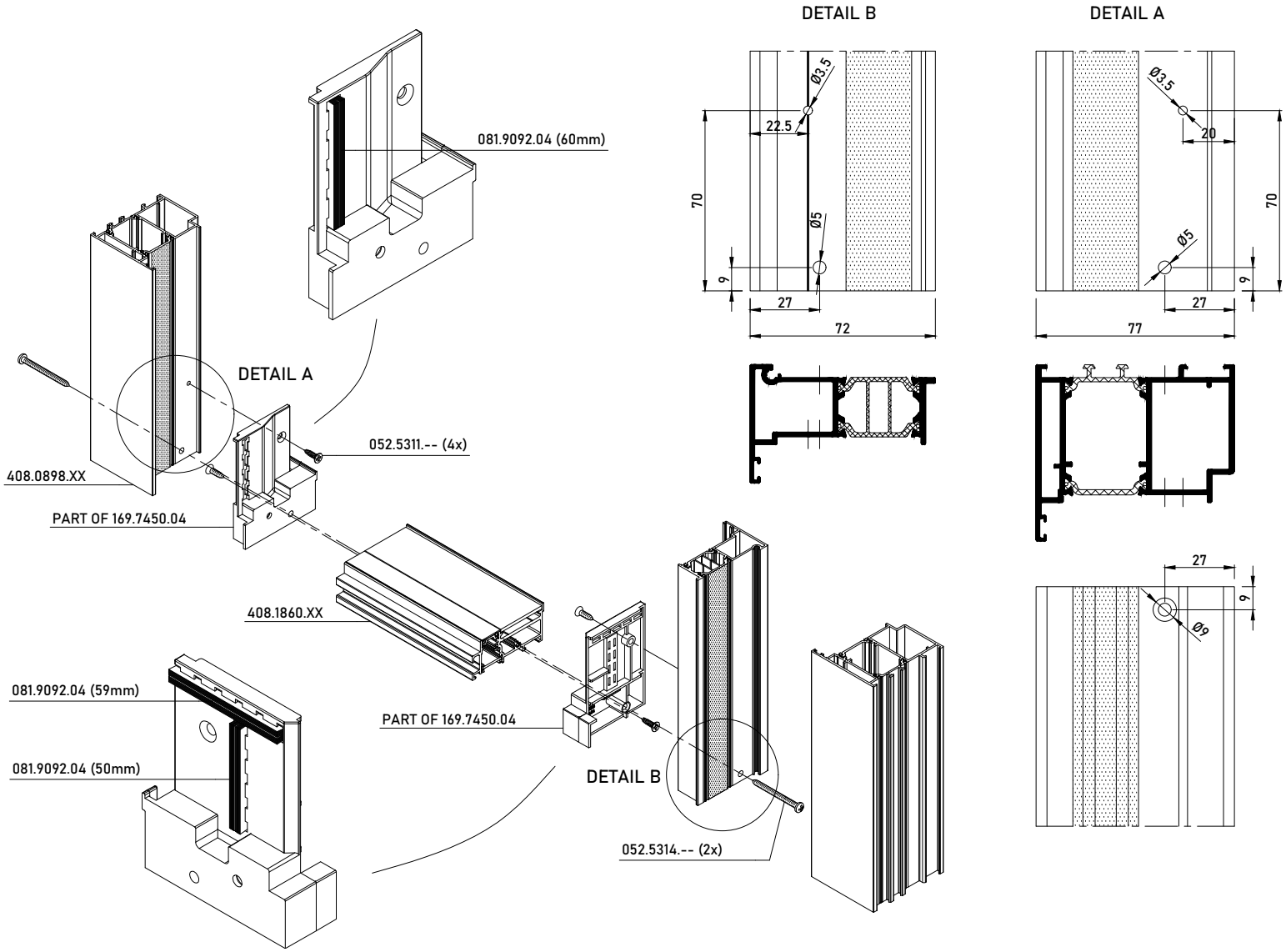

PIVOT DOOR INWARD OPENING

PIVOT DOOR INWARD OPENING

MASTERLINE 8-Fu

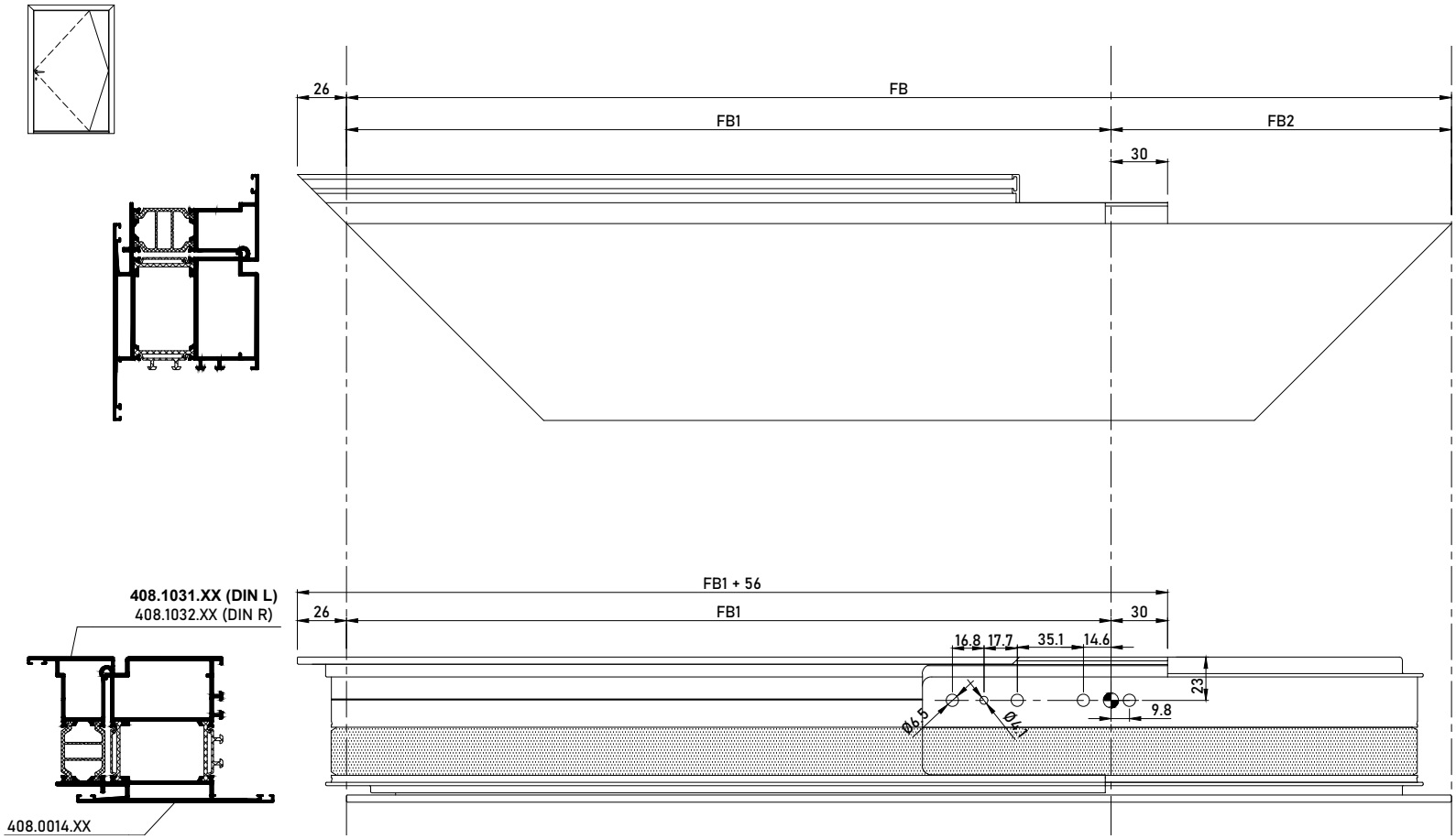

PIVOT DOOR INWARD OPENING

PIVOT DOOR INWARD OPENING

MASTERLINE 8-Fu

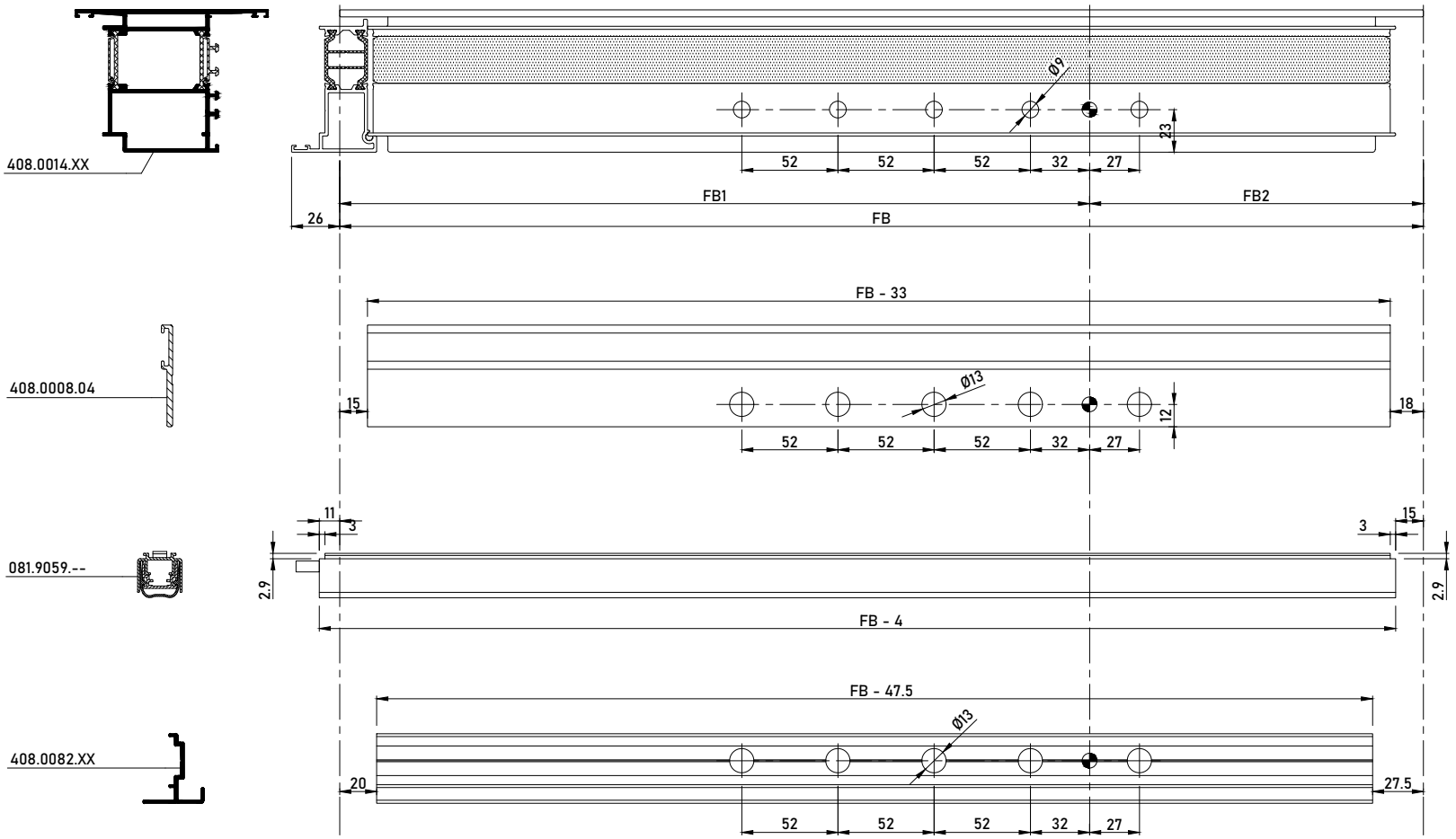

PIVOT DOOR OUTWARD OPENING

PIVOT DOOR OUTWARD OPENING

MASTERLINE 8-Fu

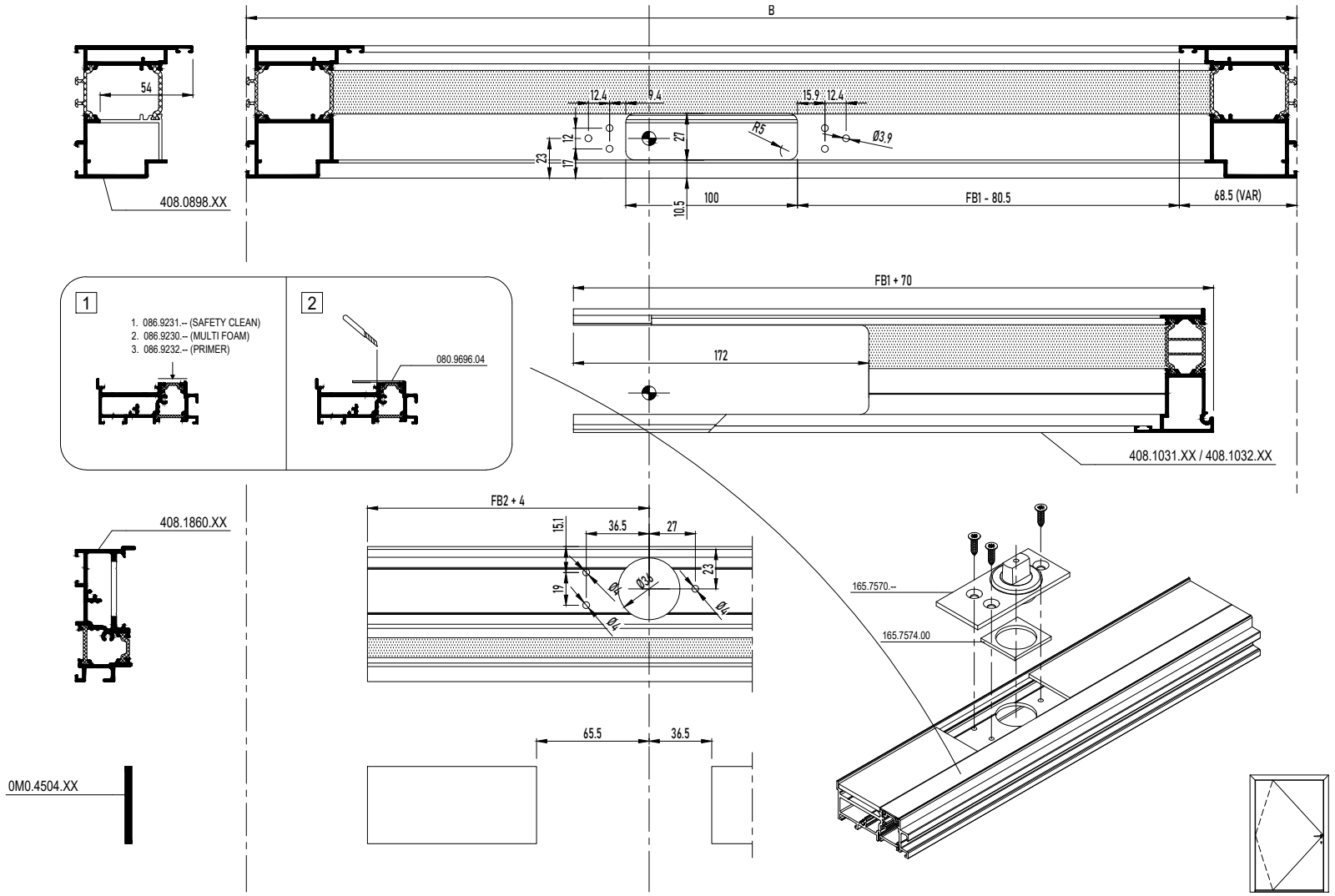

PIVOT DOOR OUTWARD OPENING

PIVOT DOOR OUTWARD OPENING

MASTERLINE 8-Fu

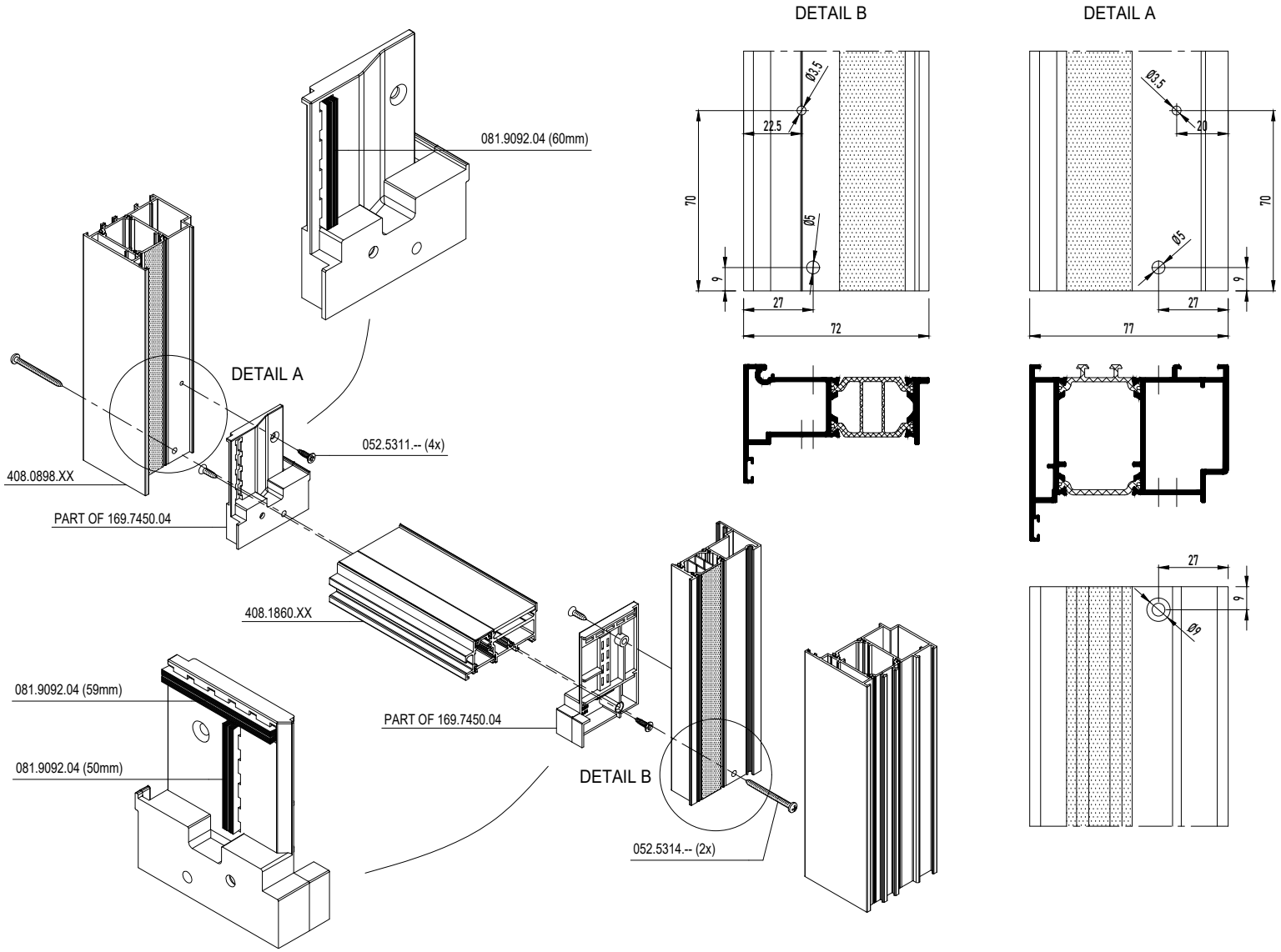

PIVOT DOOR OUTWARD OPENING

PIVOT DOOR OUTWARD OPENING

MASTERLINE 8-Fu

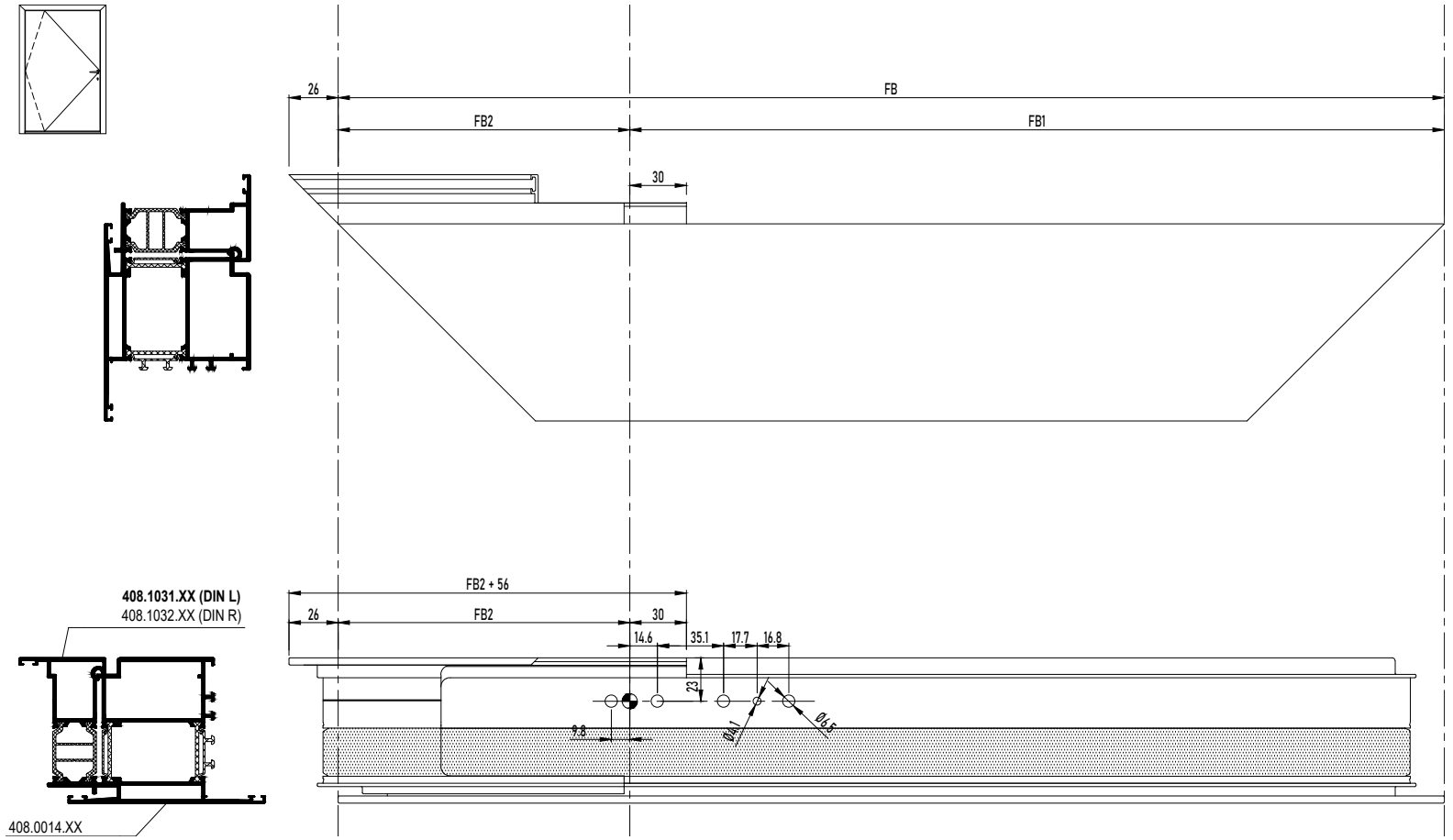

PIVOT DOOR OUTWARD OPENING

PIVOT DOOR OUTWARD OPENING

MASTERLINE 8-Fu

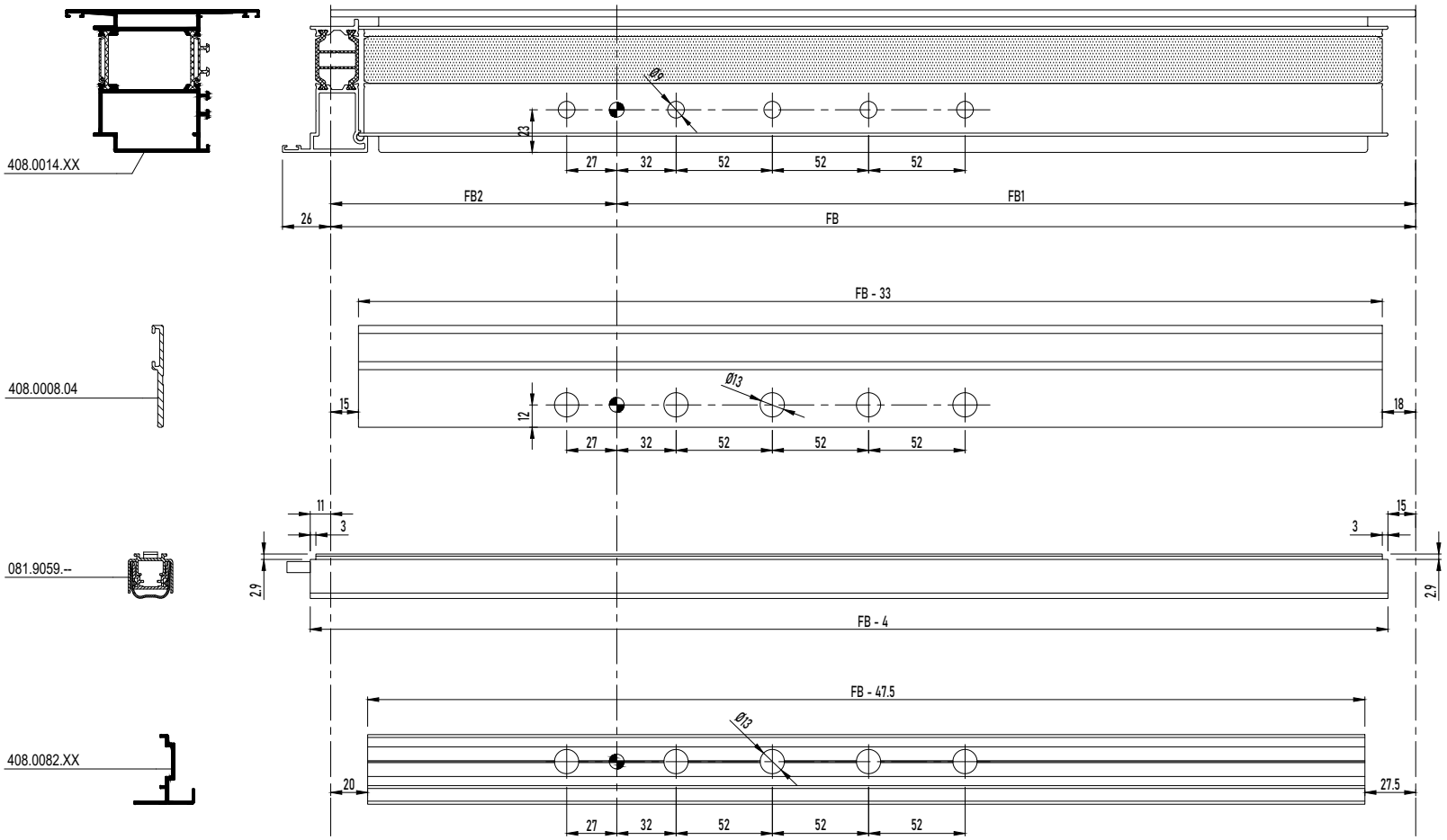

ASSEMBLY VENT PIVOT DOOR

ASSEMBLY VENT

MASTERLINE 8-Fu

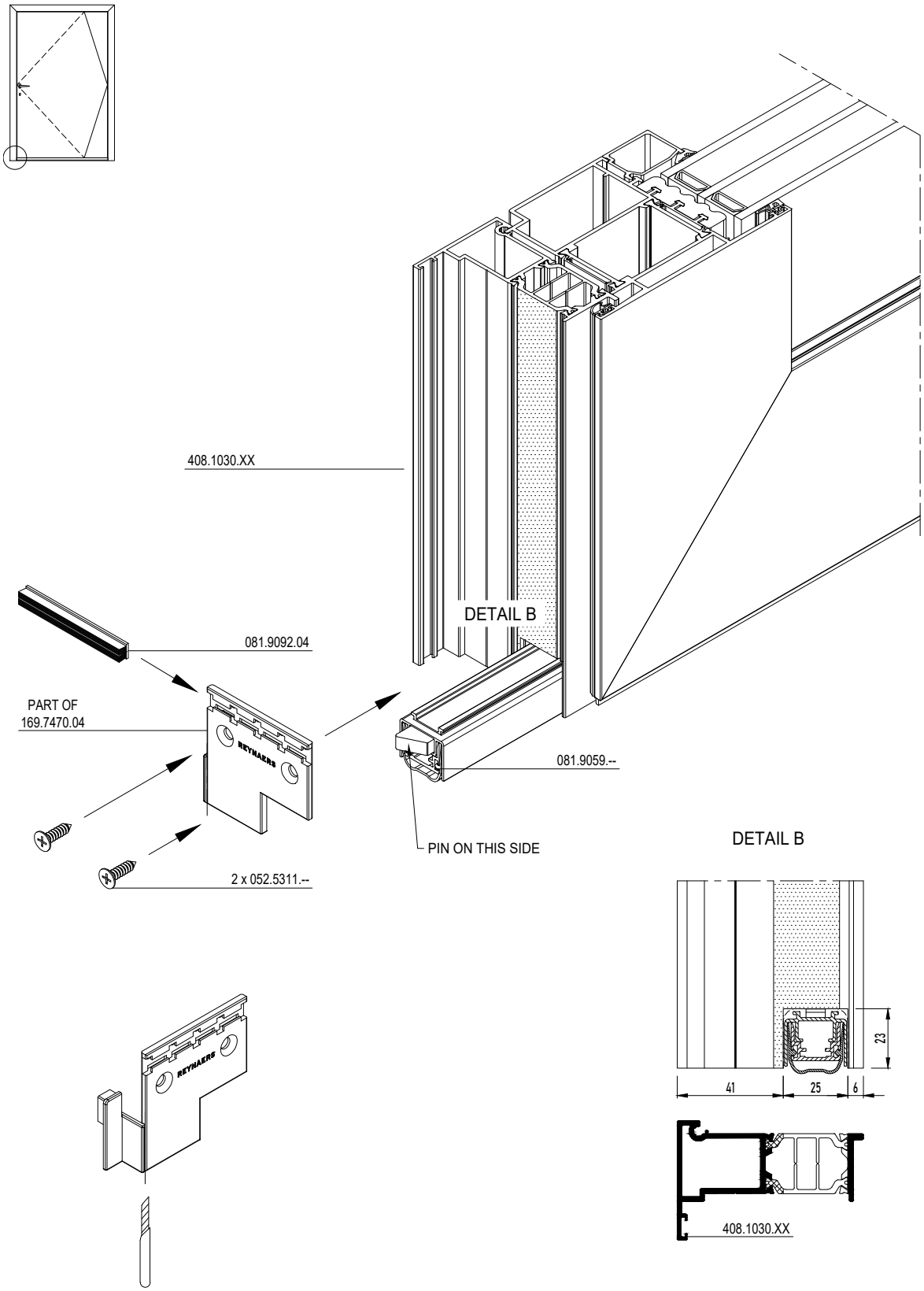

ASSEMBLY VENT PIVOT DOOR

ASSEMBLY VENT

MASTERLINE 8-Fu

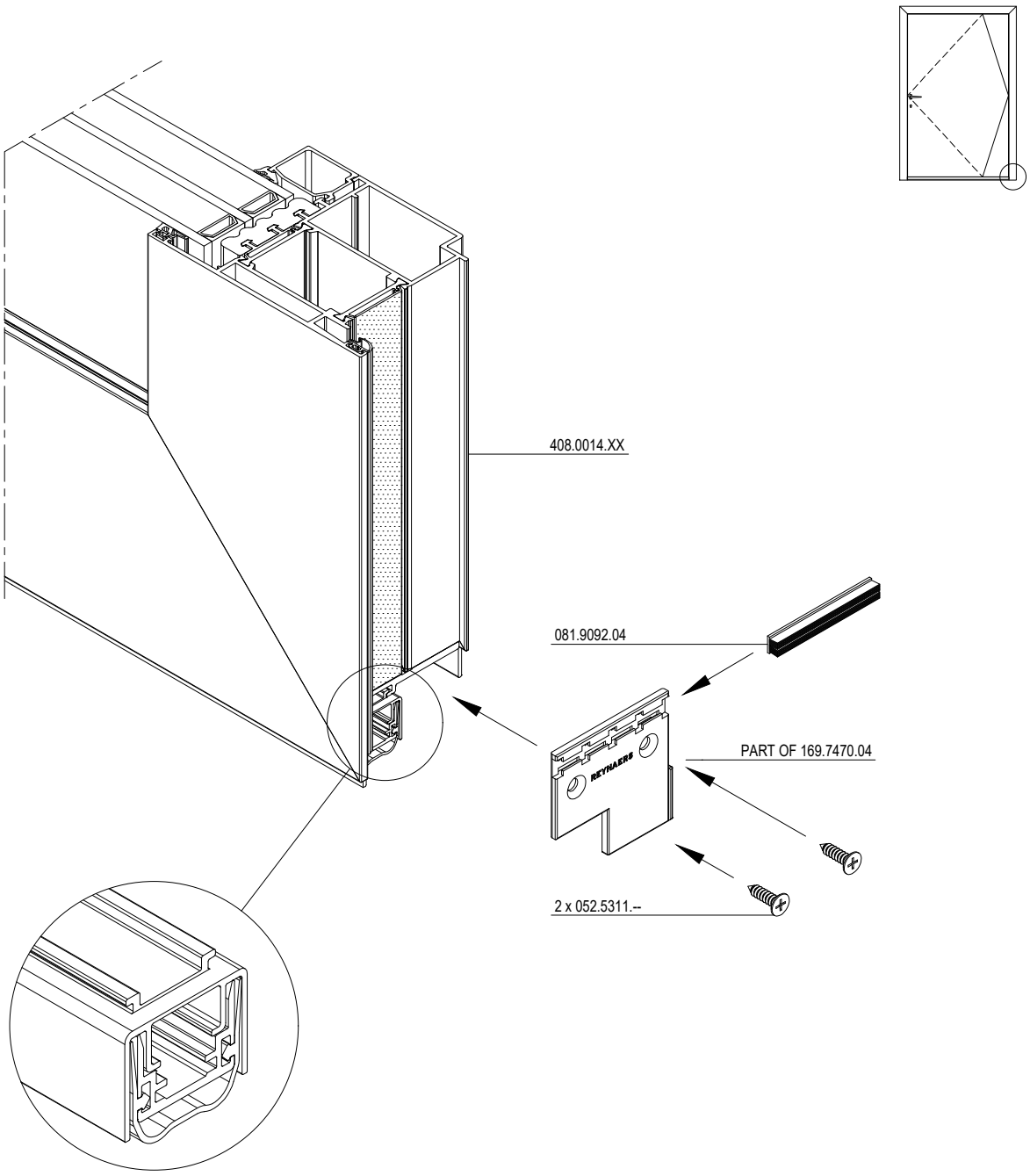

ASSEMBLY VENT PIVOT DOOR

ASSEMBLY VENT

MASTERLINE 8-Fu

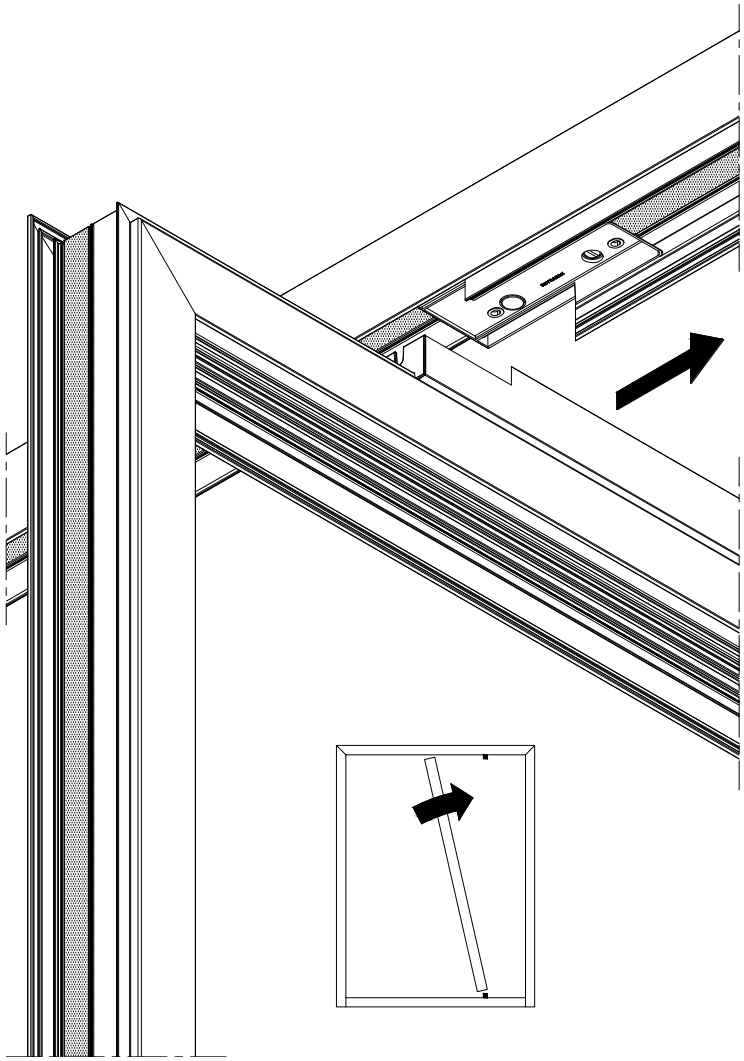

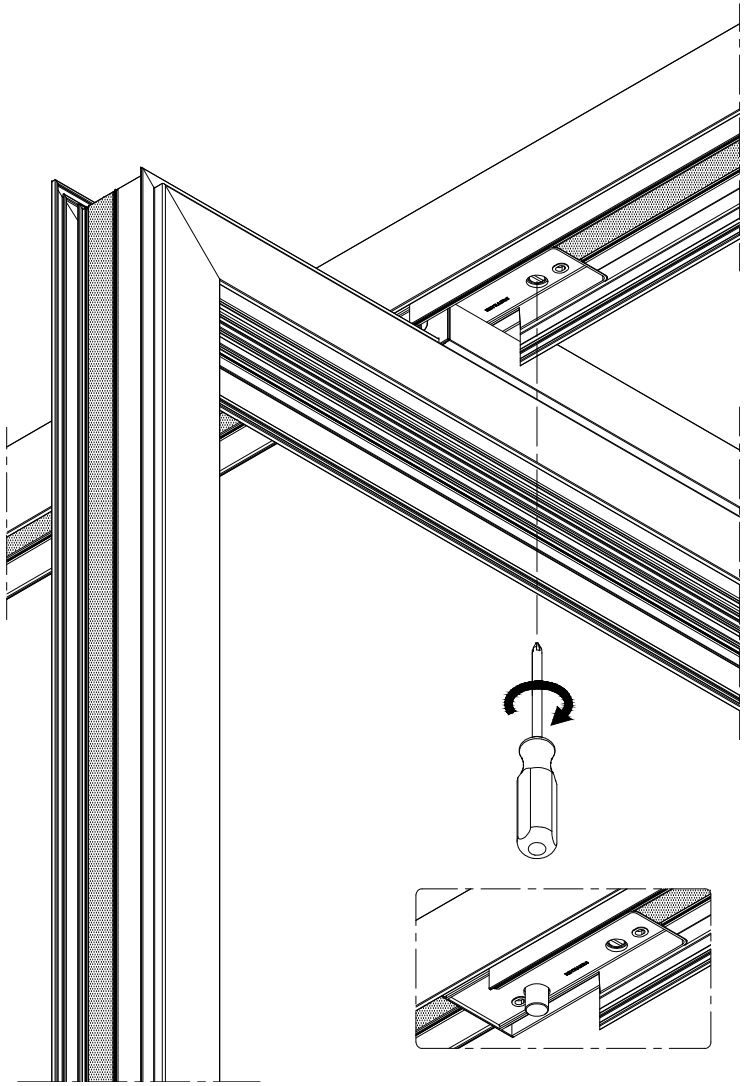

ASSEMBLY FRAME PIVOT DOOR XL

CORNER CONNECTION OUTER FRAME

MASTERLINE 8-Fu

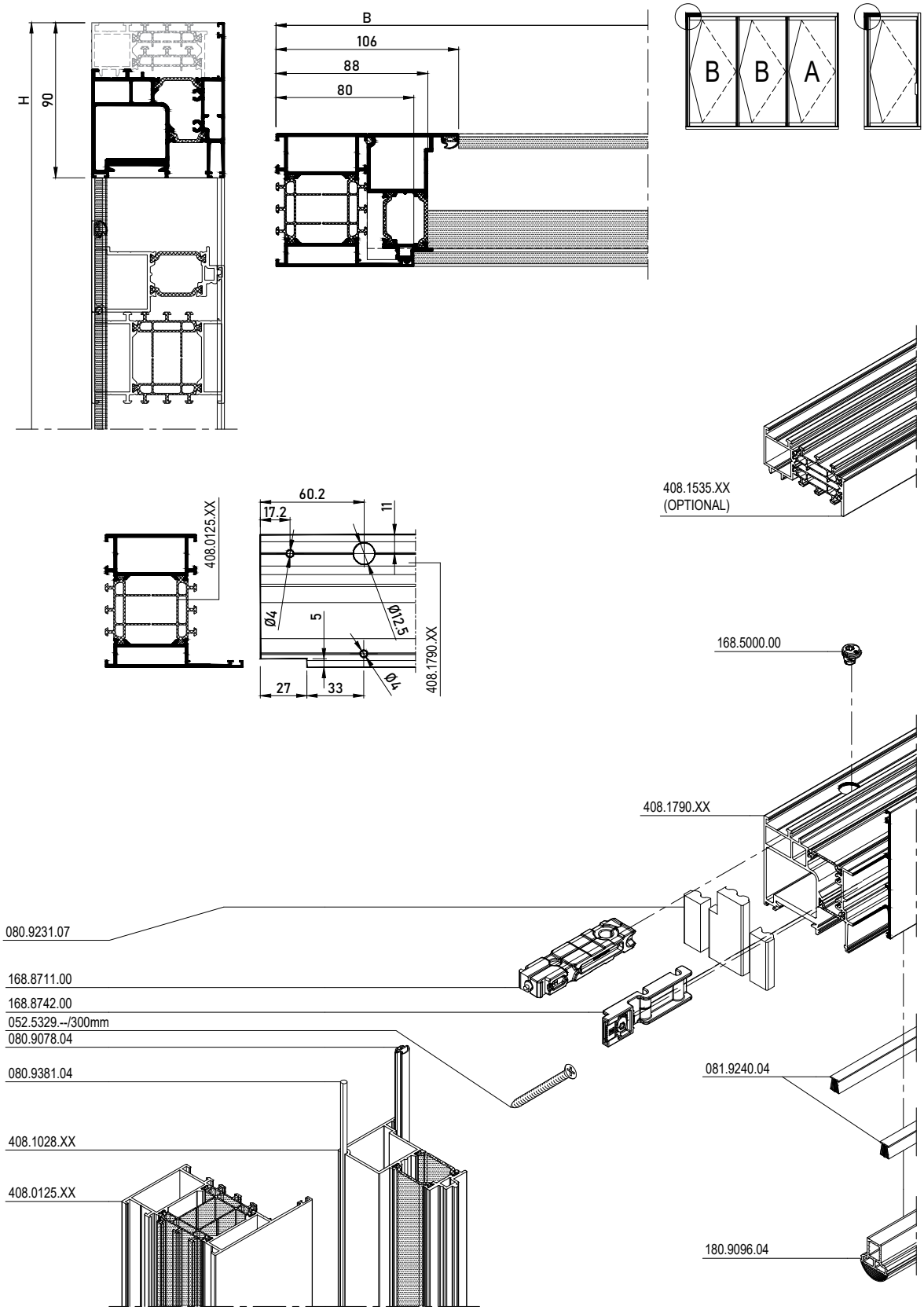

ASSEMBLY FRAME PIVOT DOOR XL

CORNER CONNECTION OUTER FRAME

MASTERLINE 8-Fu

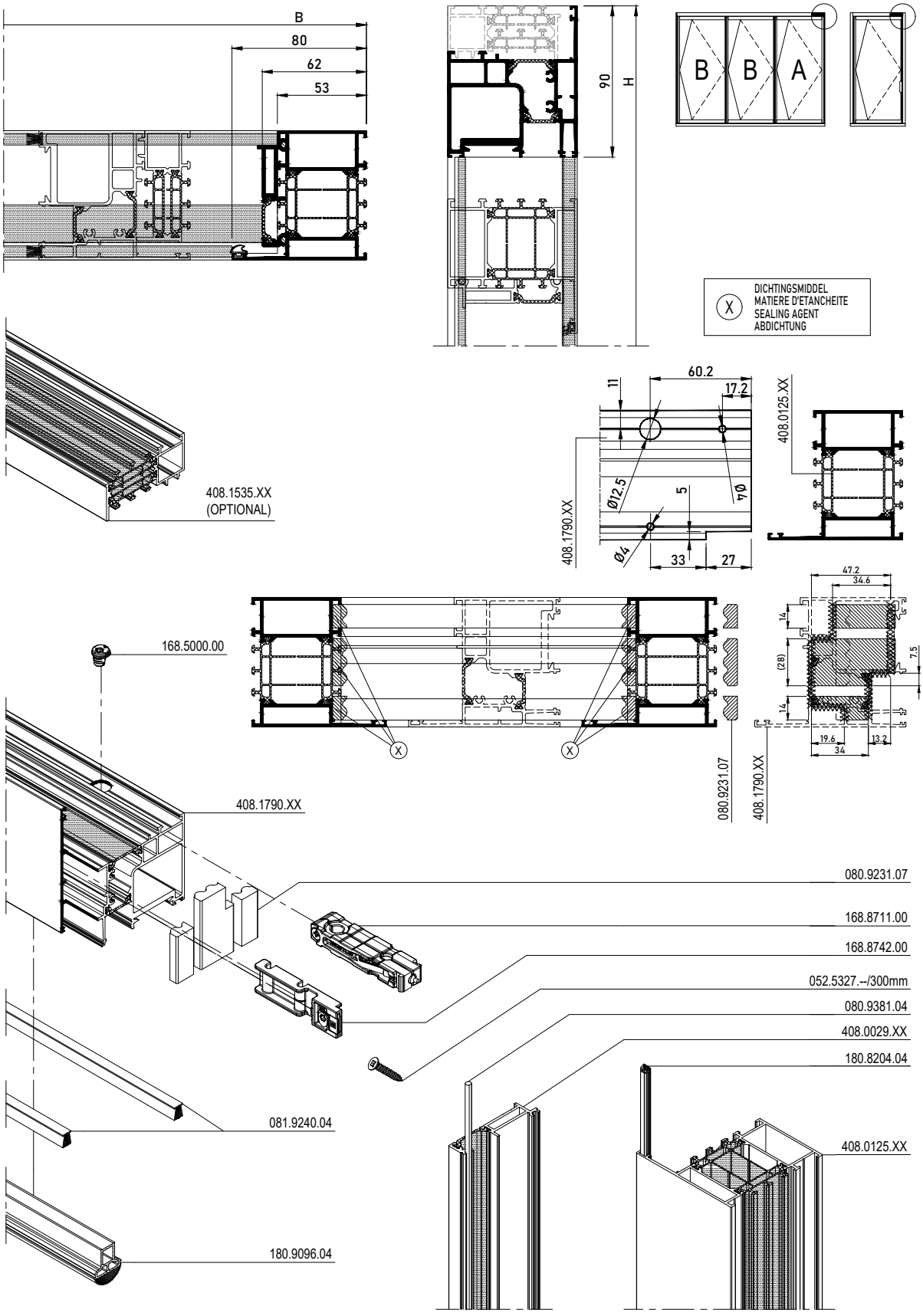

SEALING T-CONNECTION PIVOT DOOR XL

SEALING PIECES T-CONNECTION

MASTERLINE 8-Fu

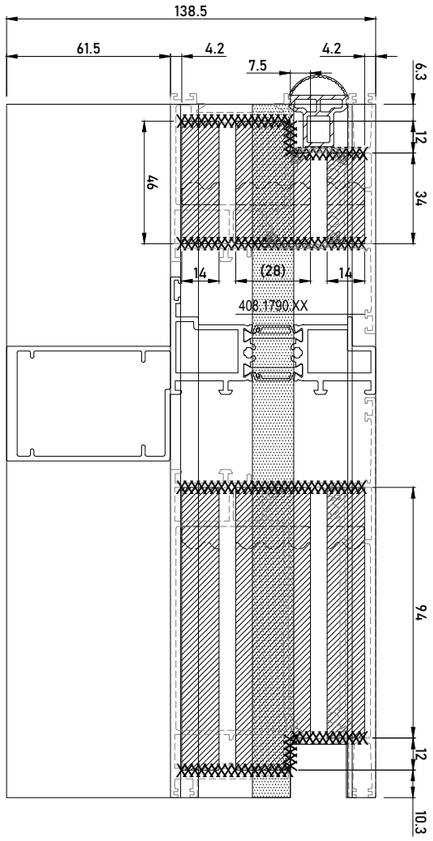

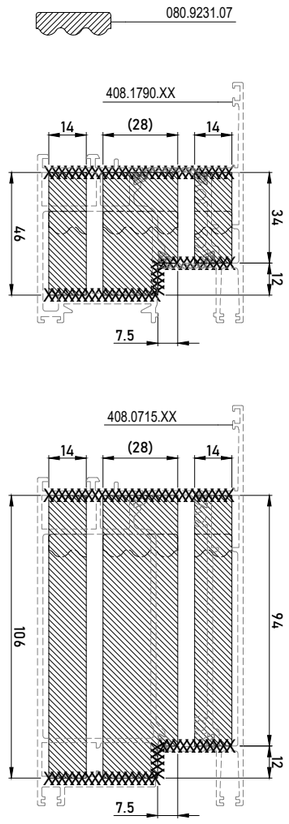

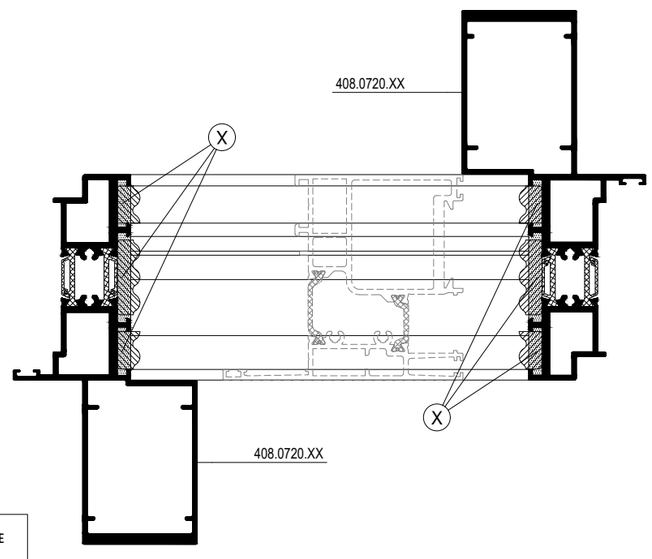

X DICHTINGSMIDDEL
MATIERE D'ETANCHEITE
SEALING AGENT
ABDICHTUNG

BIJKOMENDE INFO VOORBEREIDING/VERWERKING -> ZIE HOOFDSTUK F 'VERWERKINGSVOORSCHRIFTEN' !
INFO COMPLEMENTAIRE PREPARATION/USINAGE -> VOIR CHAPITRE F 'PRESCRIPTIONS DE MISE EN OEUVRE' !
ADDITIONAL INFO PREPARATION/PROCESSING -> SEE CHAPTER F 'PROCESSING DATA' !
ZUSAETZLICHE INFO VORBEREITUNG/VERARBEITUNG -> SIEHE KAPITEL F 'VERARBEITUNGSVORSCHRIFTEN' !

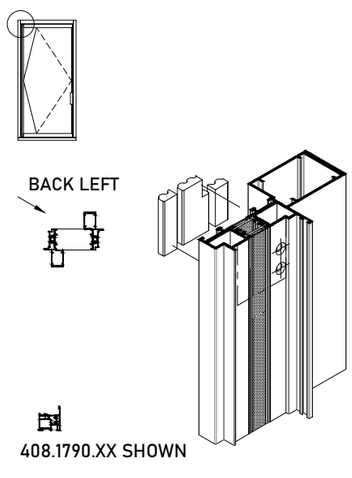

408.1790.XX SHOWN

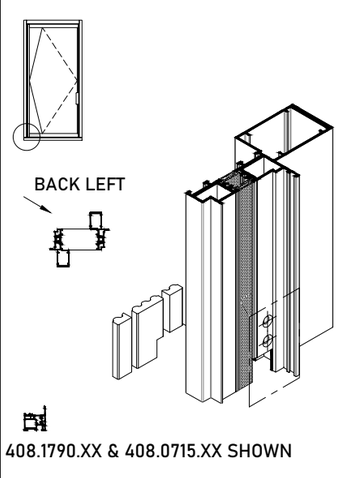

408.1790.XX & 408.0715.XX SHOWN

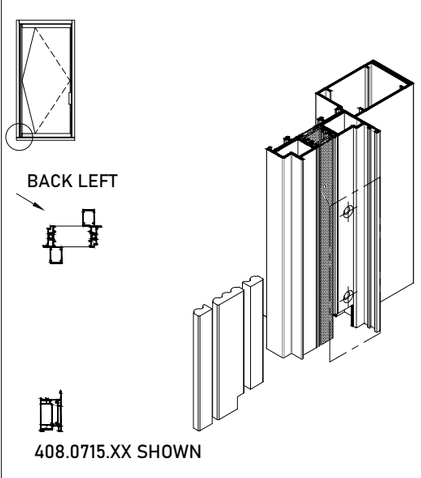

408.0715.XX SHOWN

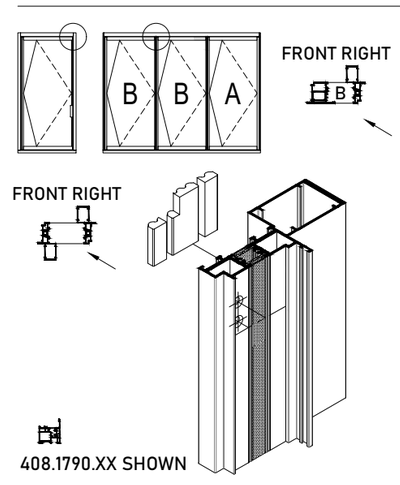

408.1790.XX SHOWN

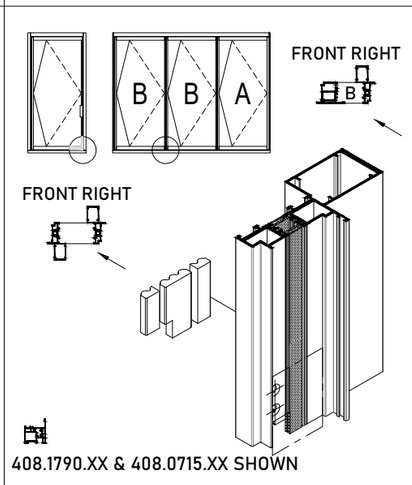

408.1790.XX & 408.0715.XX SHOWN

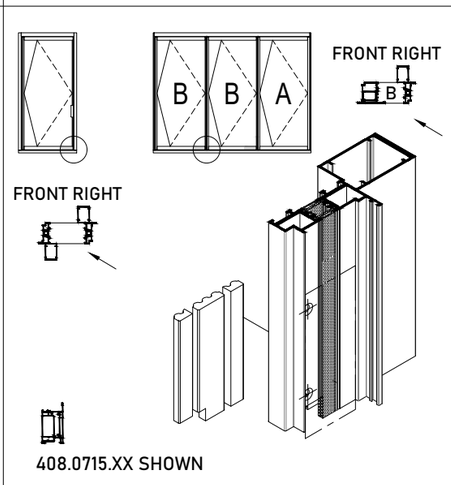

408.0715.XX SHOWN

DRAINAGE GUTTER FLUSH DOOR

DRAINAGE GUTTER - FLOOR PROFILE FLUSH DOOR

MASTERLINE 8-Fu

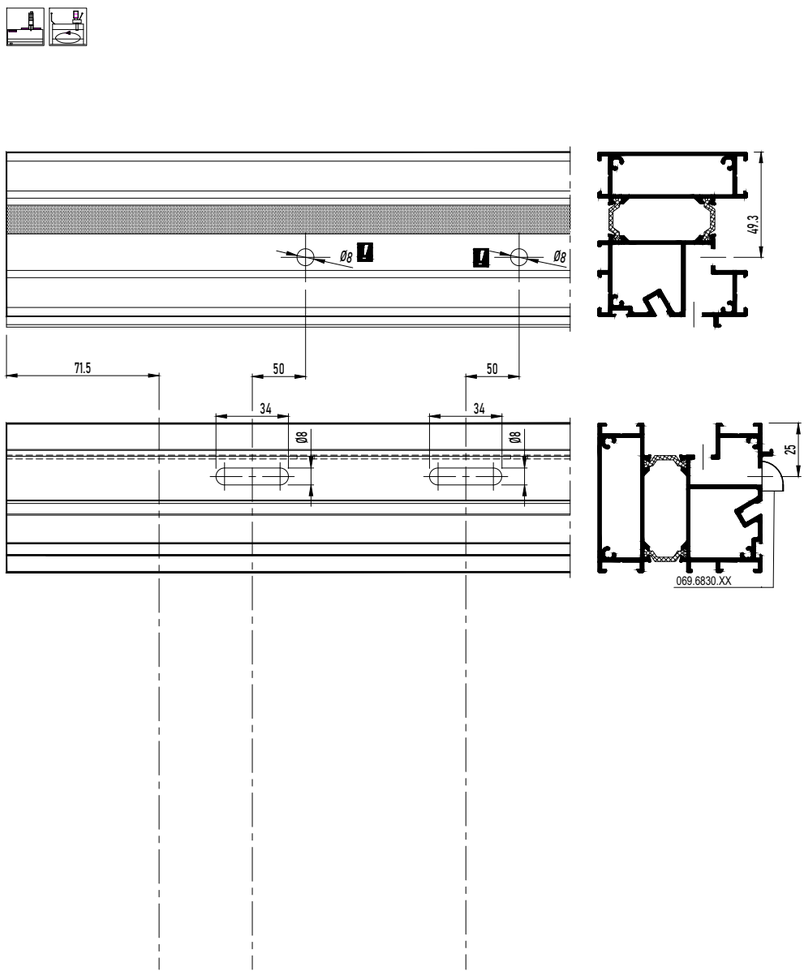

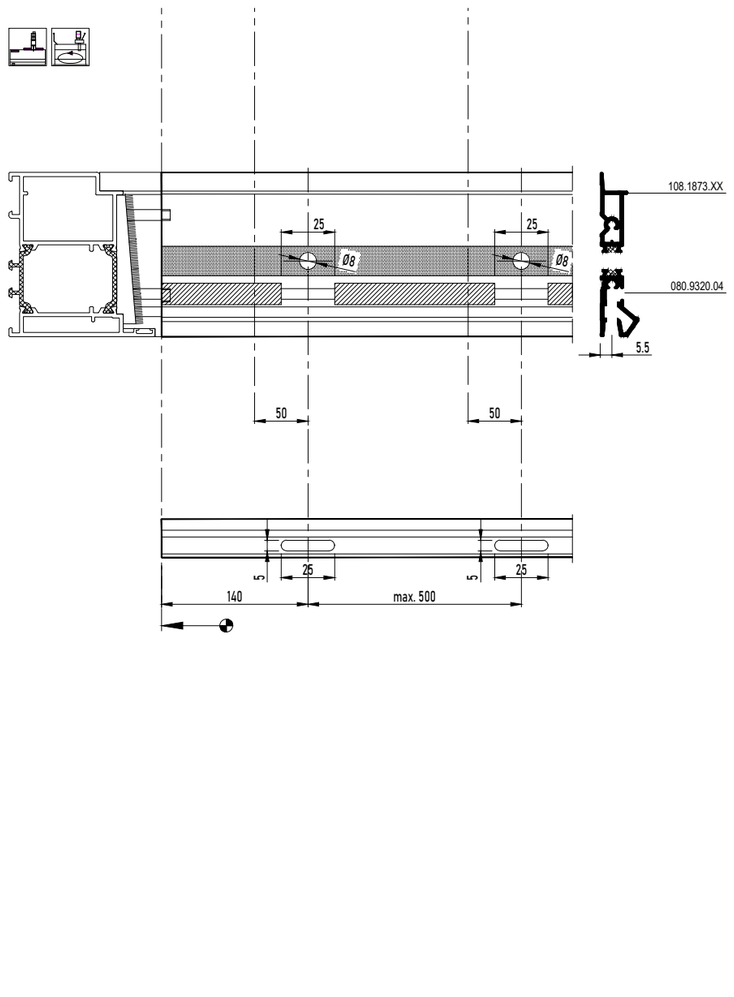

069.6747.04 --> 12MM
069.6747.04 --> 12MM
069.6747.04 --> 12MM
069.6747.04 --> 12MM



069.6747.04

DRAINAGE GUTTER FLUSH DOOR

DRAINAGE GUTTER - FLOOR PROFILE FLUSH DOOR

MASTERLINE 8-Fu

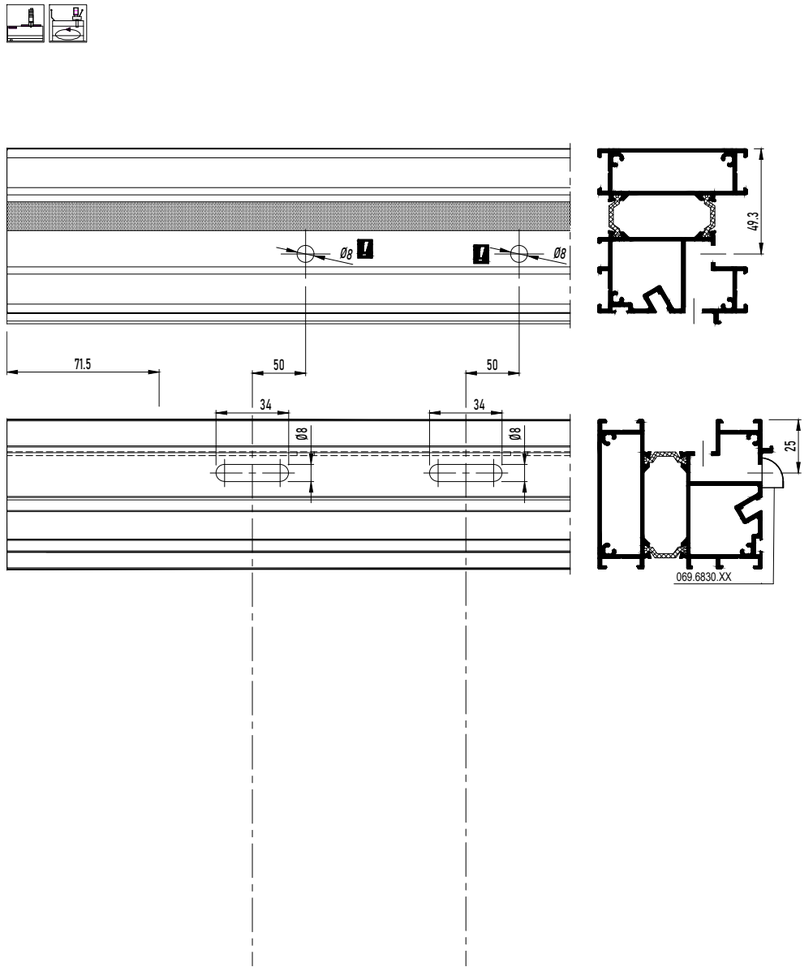

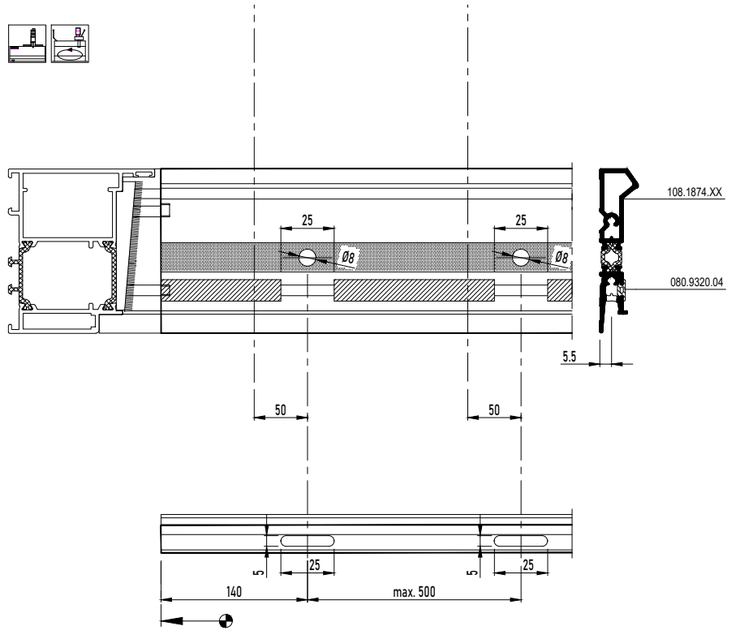



DRAINAGE MC GUTTER FLUSH DOOR

DRAINAGE GUTTER - FLOOR PROFILE FLUSH DOOR

MASTERLINE 8-Fu

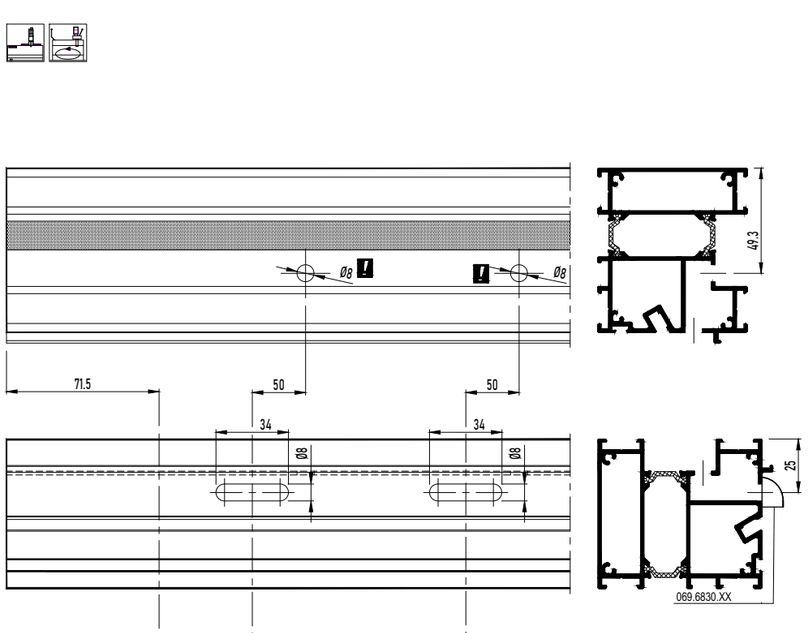

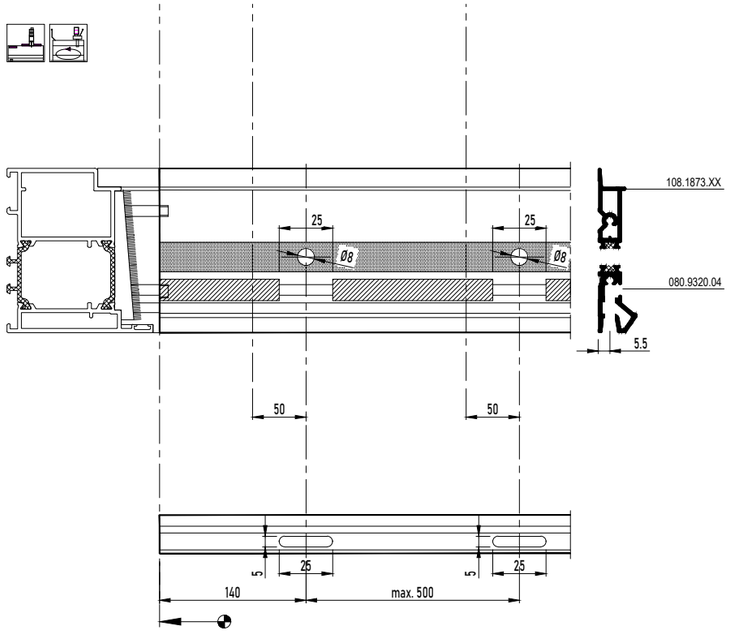

069.6747.04 --> 12MM
069.6747.04 --> 12MM
069.6747.04 --> 12MM
069.6747.04 --> 12MM



DRAINAGE MC GUTTER FLUSH DOOR

DRAINAGE GUTTER - FLOOR PROFILE FLUSH DOOR

MASTERLINE 8-Fu

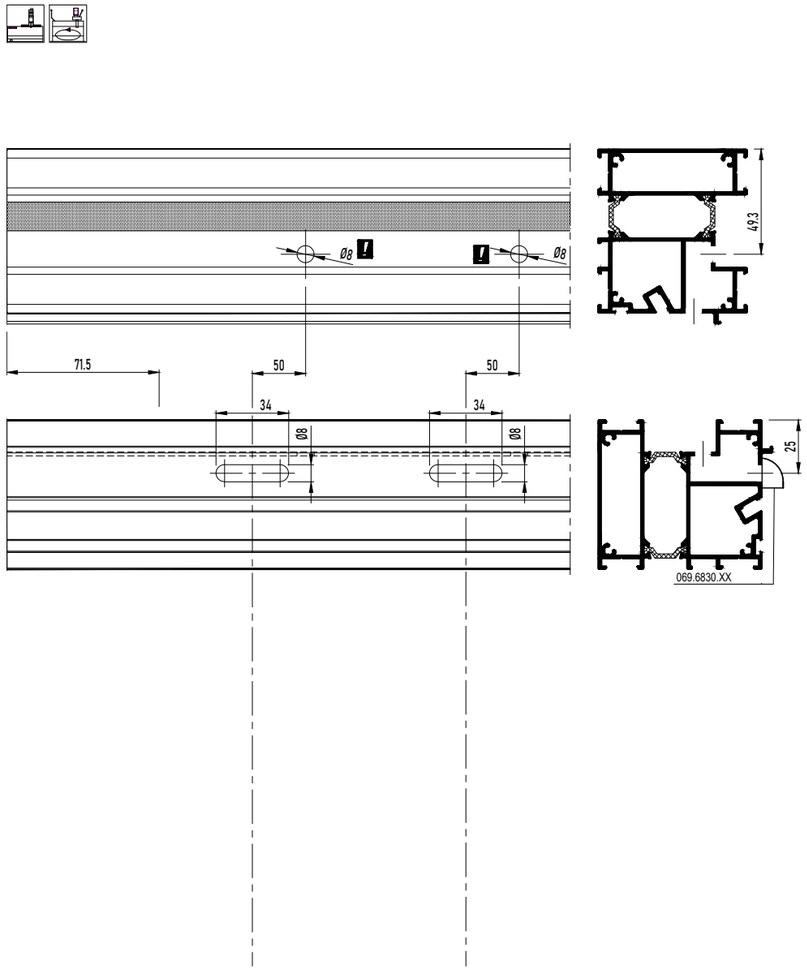

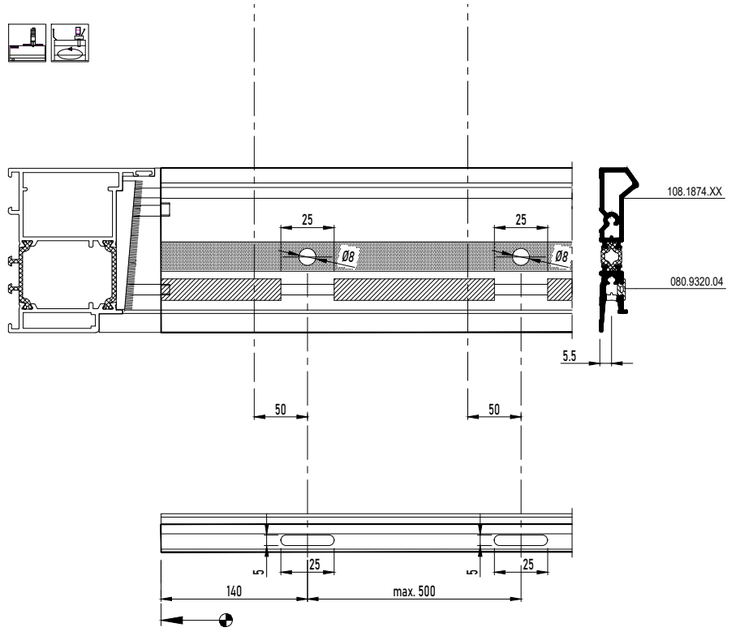



DRAINAGE CR GUTTER FLUSH DOOR

DRAINAGE GUTTER - FLOOR PROFILE FLUSH DOOR

MASTERLINE 8-Fu

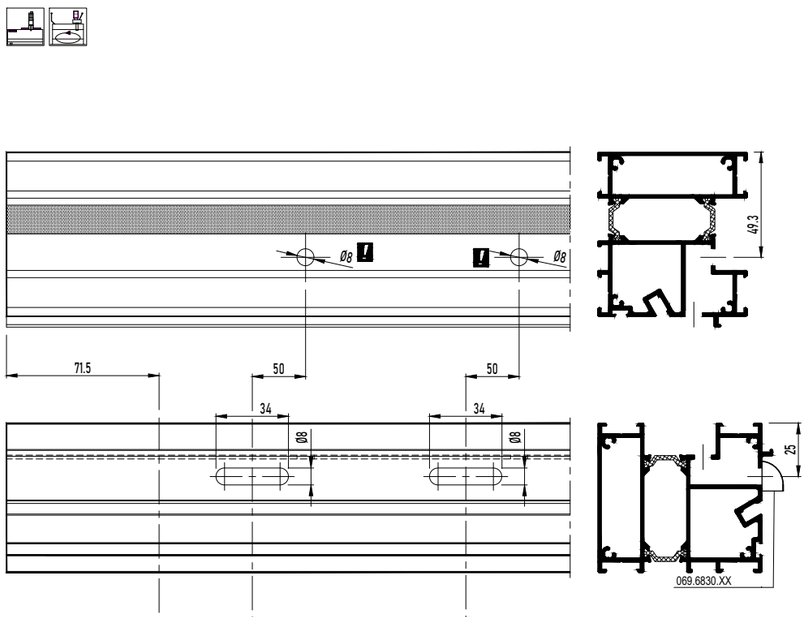

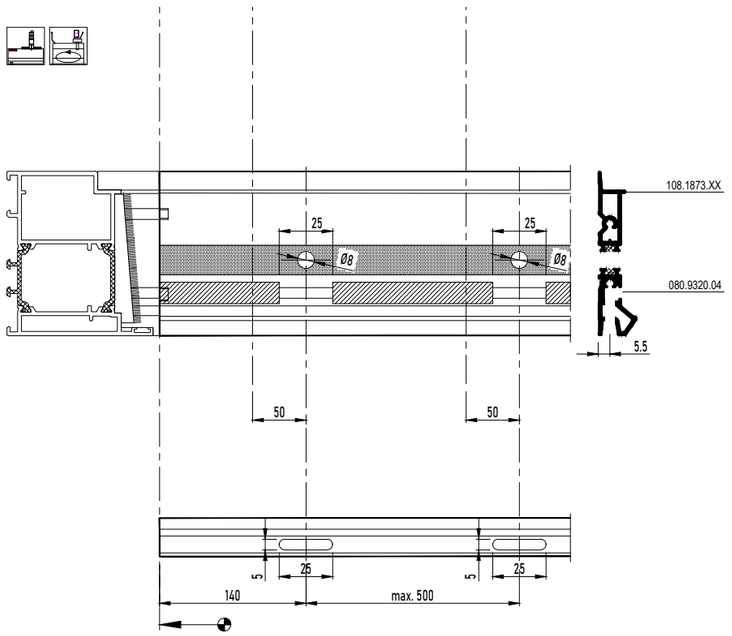

069.6747.04 --> 12MM
069.6747.04 --> 12MM
069.6747.04 --> 12MM
069.6747.04 --> 12MM



069.6747.04

DRAINAGE CR GUTTER FLUSH DOOR

DRAINAGE GUTTER - FLOOR PROFILE FLUSH DOOR

MASTERLINE 8-Fu

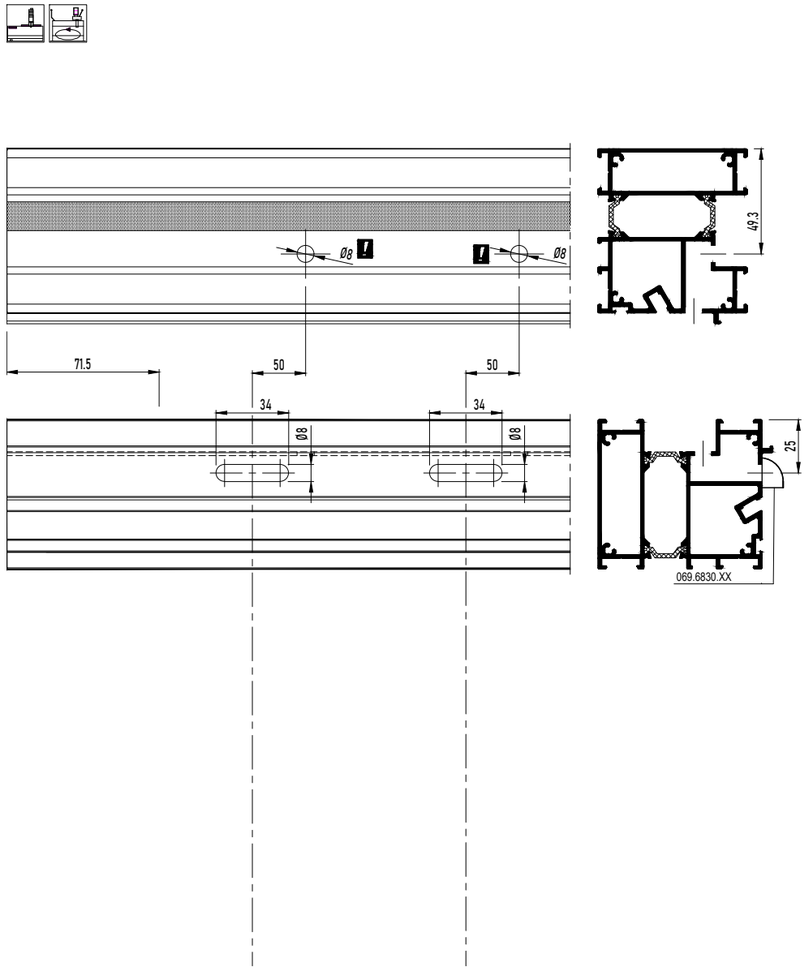

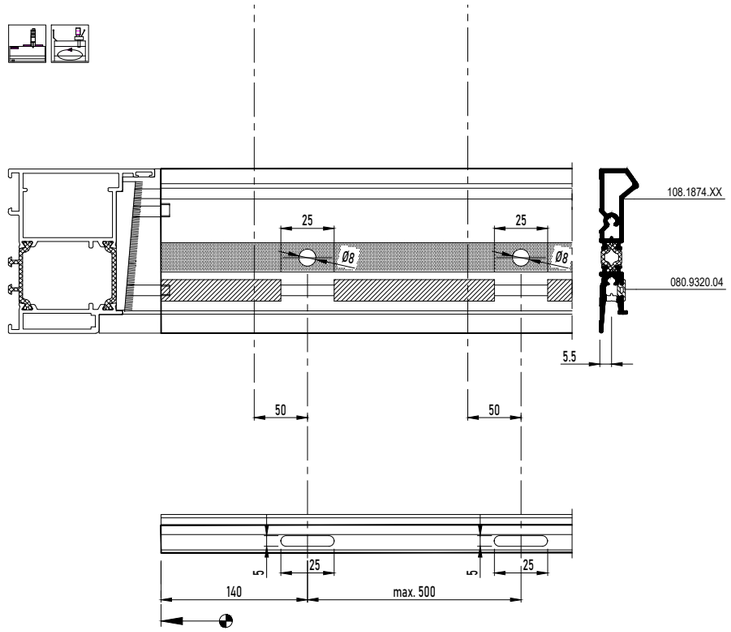



DRAINAGE GUTTER DOOR BRUSH

DRAINAGE GUTTER - DOOR WITH BRUSH

MASTERLINE 8-Fu

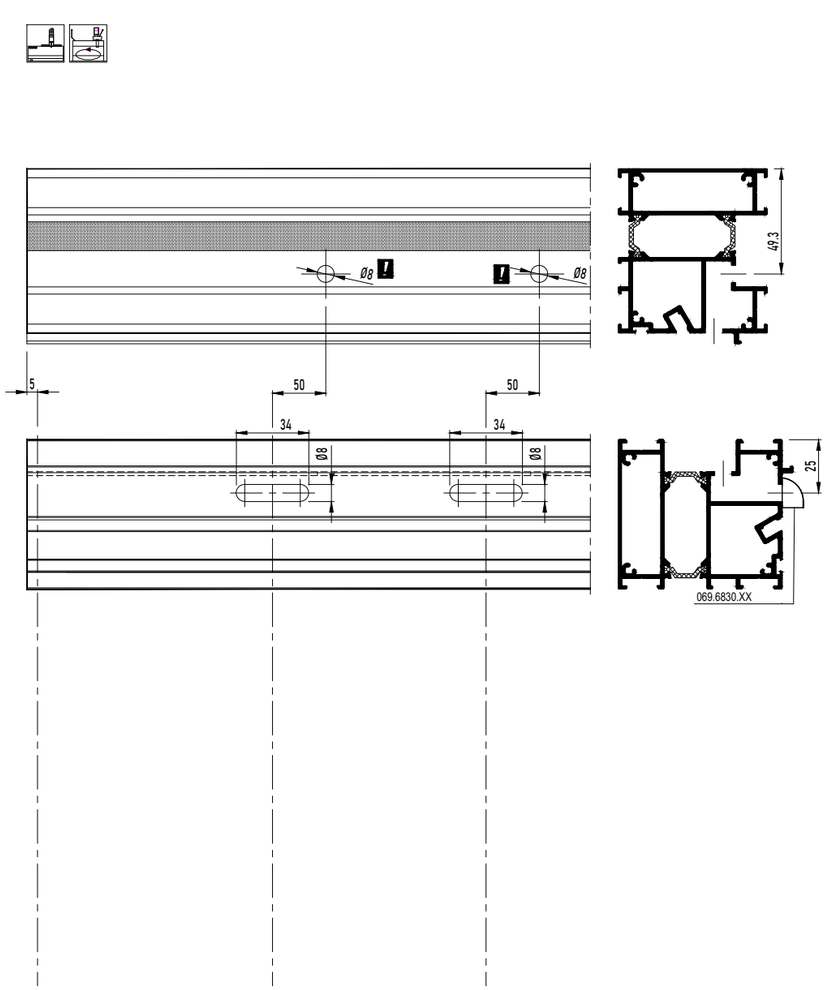

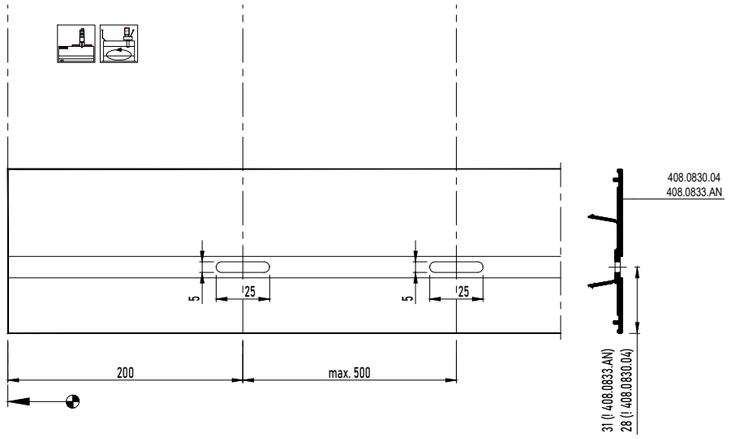

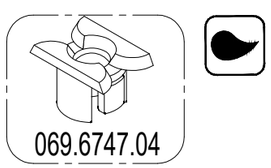

DRAINAGE MC GUTTER DOOR BRUSH

DRAINAGE GUTTER - DOOR WITH BRUSH

MASTERLINE 8-Fu

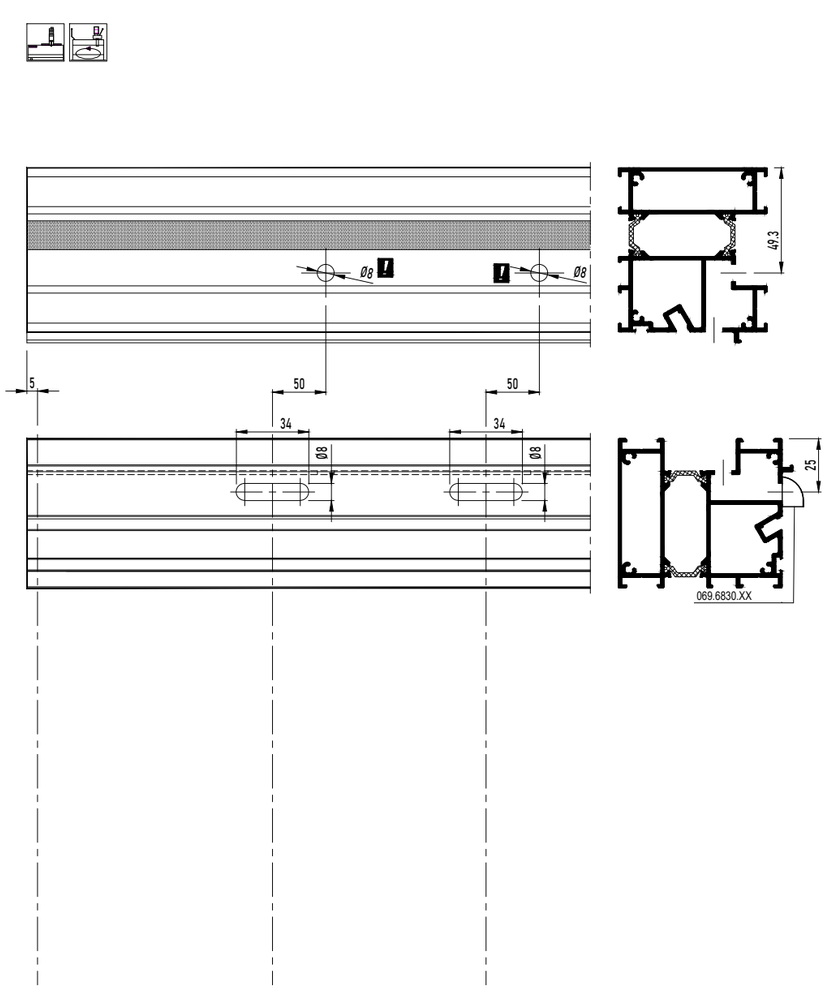

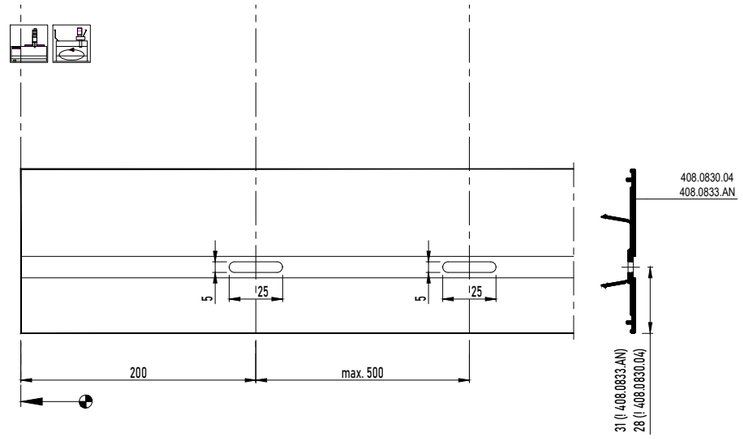

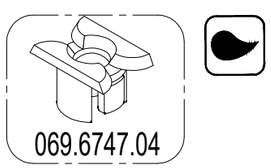

DRAINAGE CR GUTTER DOOR BRUSH

DRAINAGE GUTTER - DOOR WITH BRUSH

MASTERLINE 8-Fu

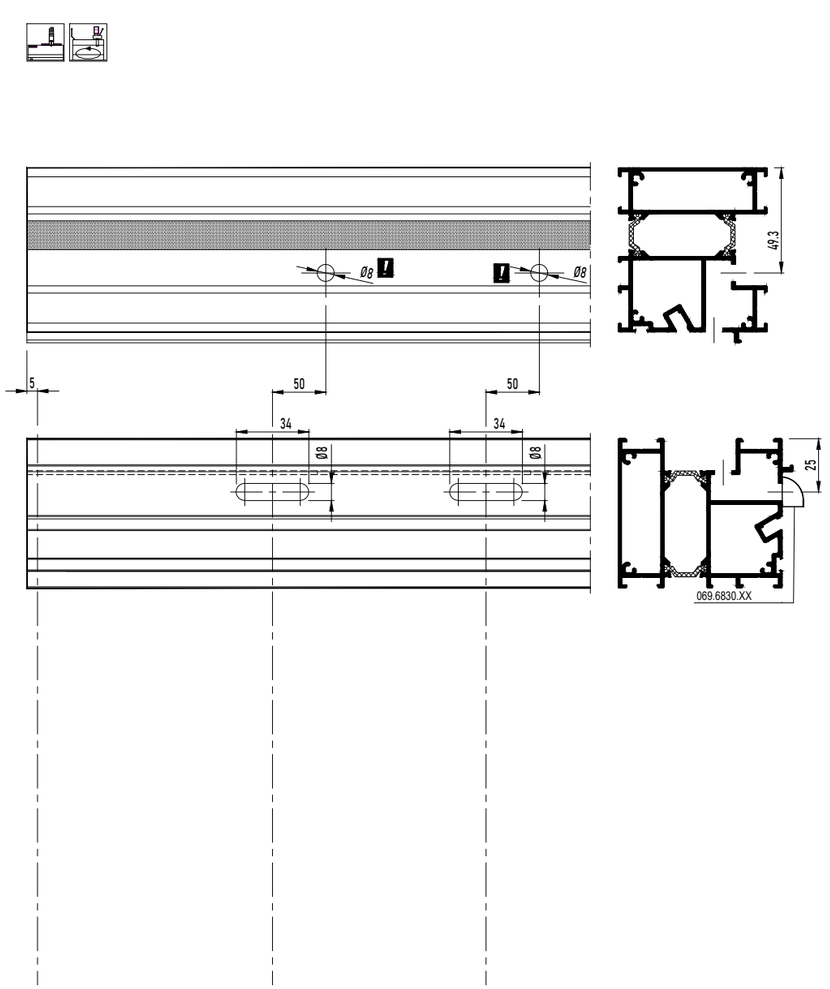

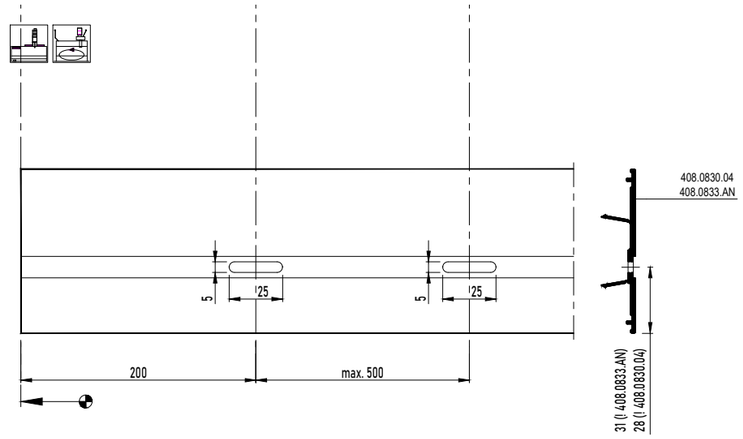

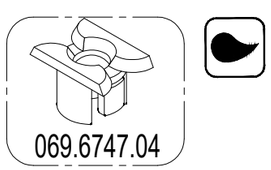

DRAINAGE GUTTER BALCONY DOOR

DRAINAGE GUTTER - FLOOR PROFILE BALCONY DOOR

MASTERLINE 8-Fu

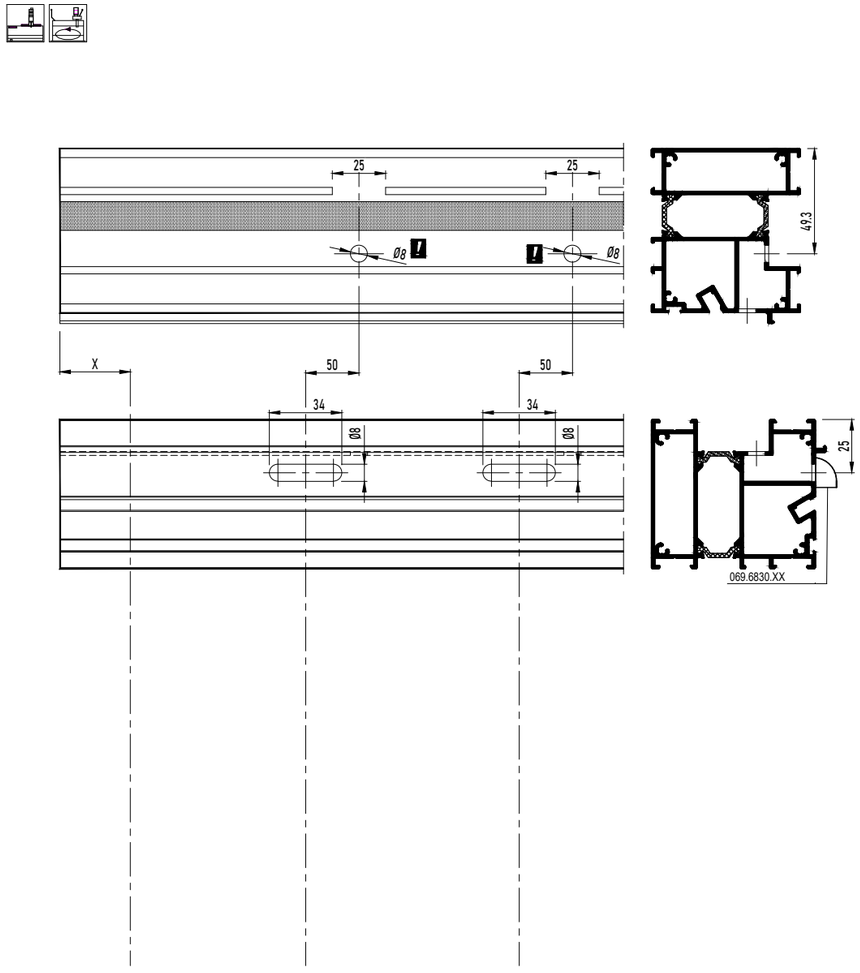

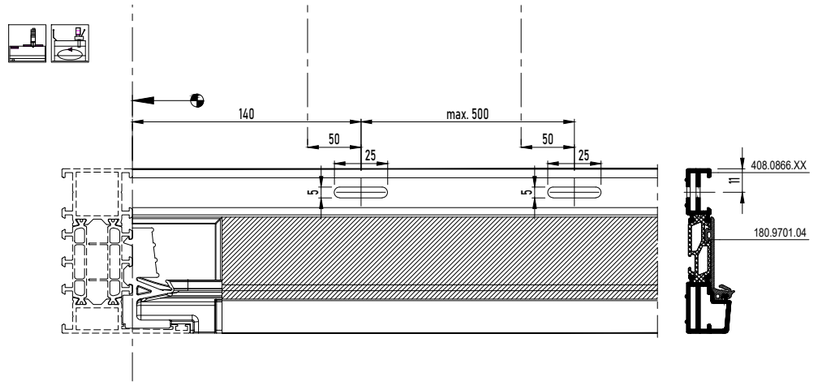



DRAINAGE GUTTER BALCONY DOOR

DRAINAGE GUTTER - FLOOR PROFILE BALCONY DOOR

MASTERLINE 8-Fu

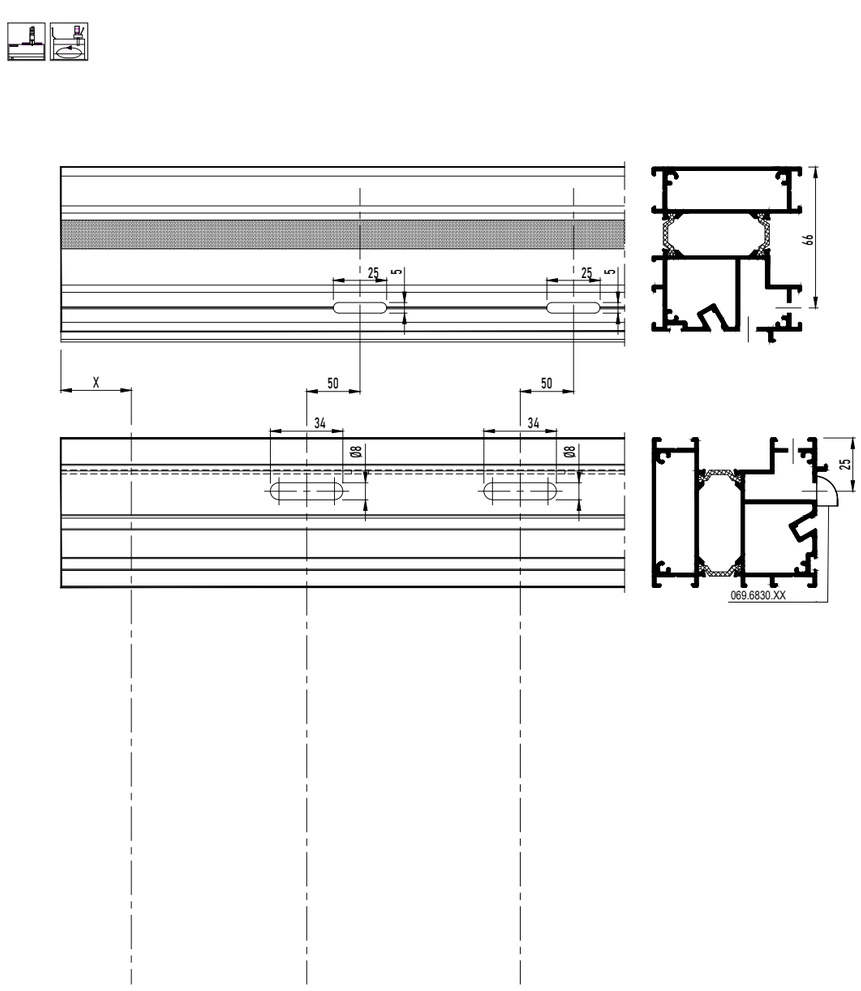

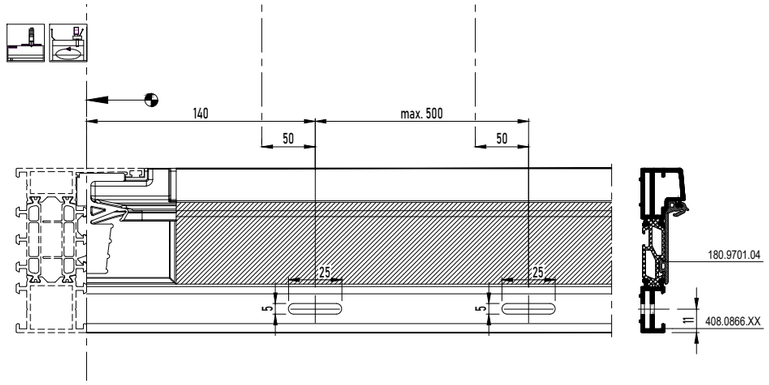

DRAINAGE MC GUTTER BALCONY DOOR

DRAINAGE GUTTER - FLOOR PROFILE BALCONY DOOR

MASTERLINE 8-Fu

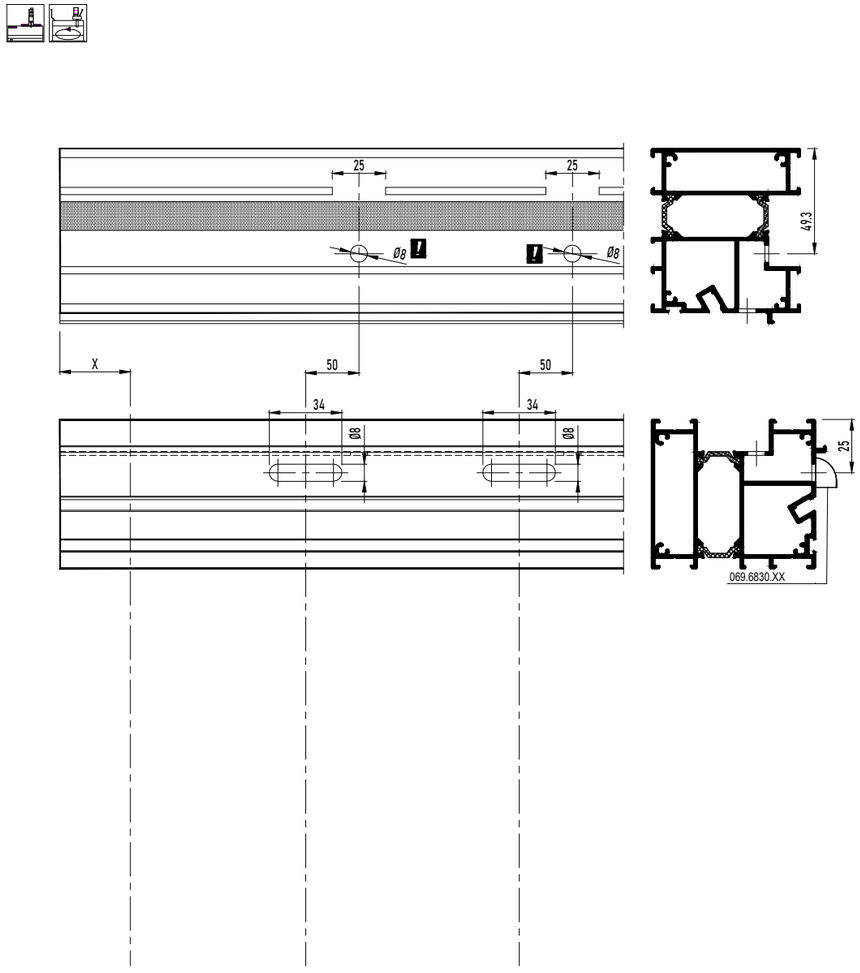

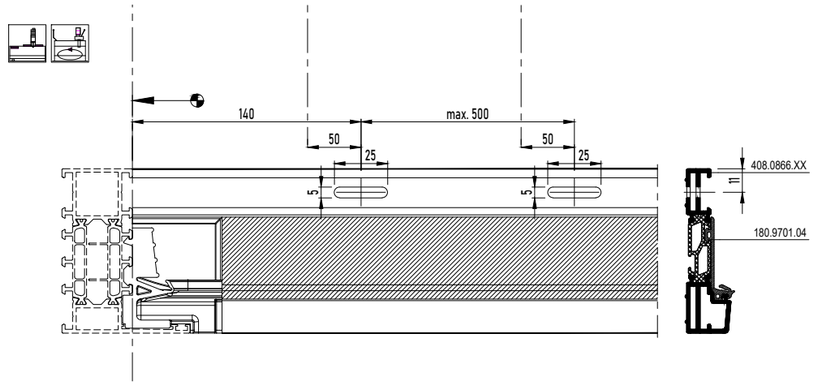



DRAINAGE MC GUTTER BALCONY DOOR

DRAINAGE GUTTER - FLOOR PROFILE BALCONY DOOR

MASTERLINE 8-Fu

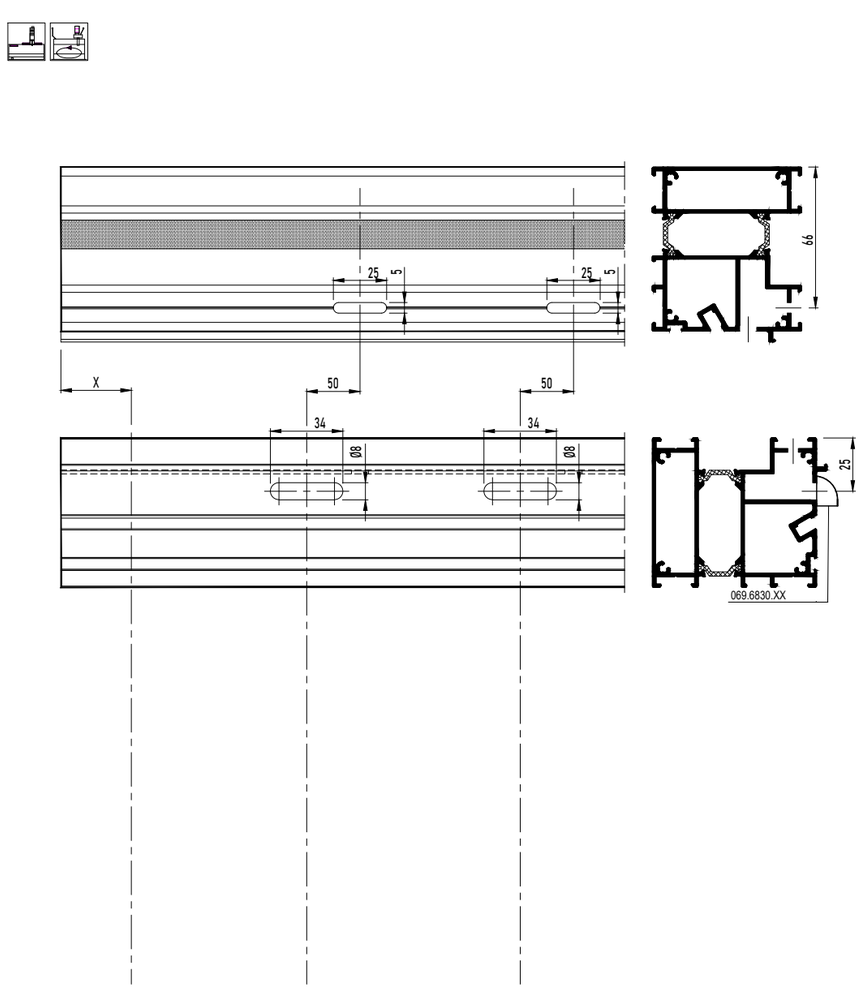

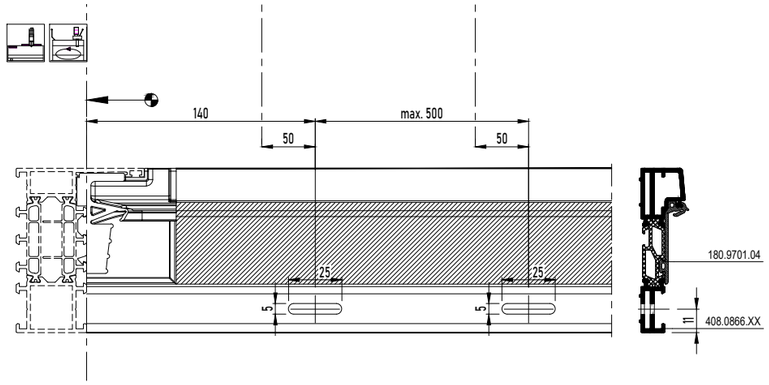

DRAINAGE CR GUTTER BALCONY DOOR

DRAINAGE GUTTER - FLOOR PROFILE BALCONY DOOR

MASTERLINE 8-Fu

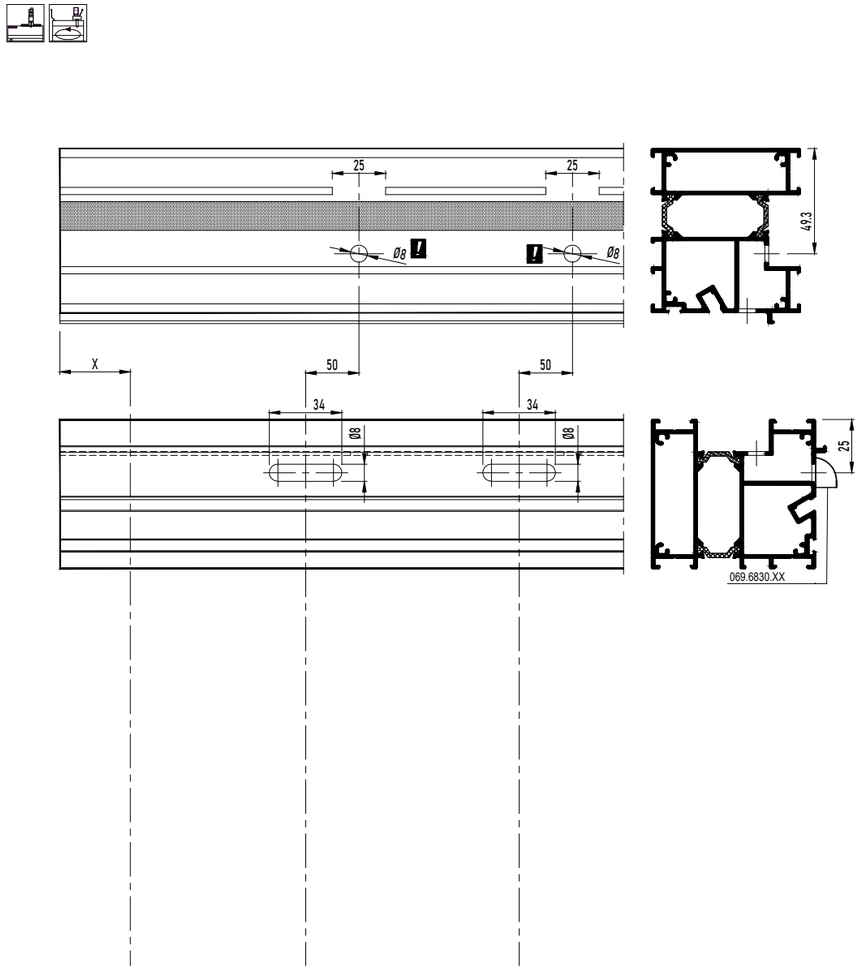

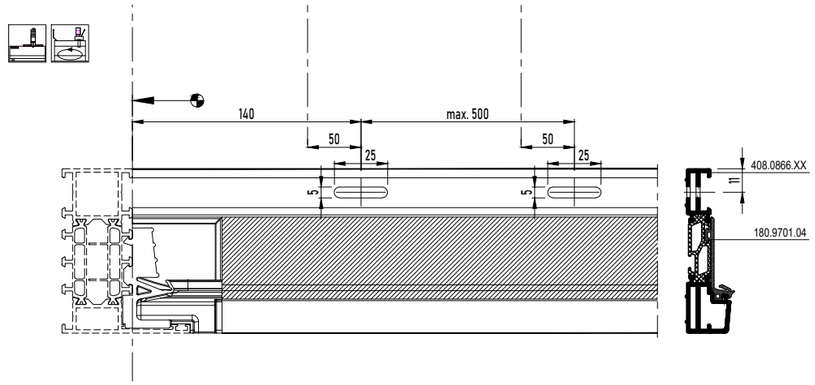



DRAINAGE CR GUTTER BALCONY DOOR

DRAINAGE GUTTER - FLOOR PROFILE BALCONY DOOR

MASTERLINE 8-Fu

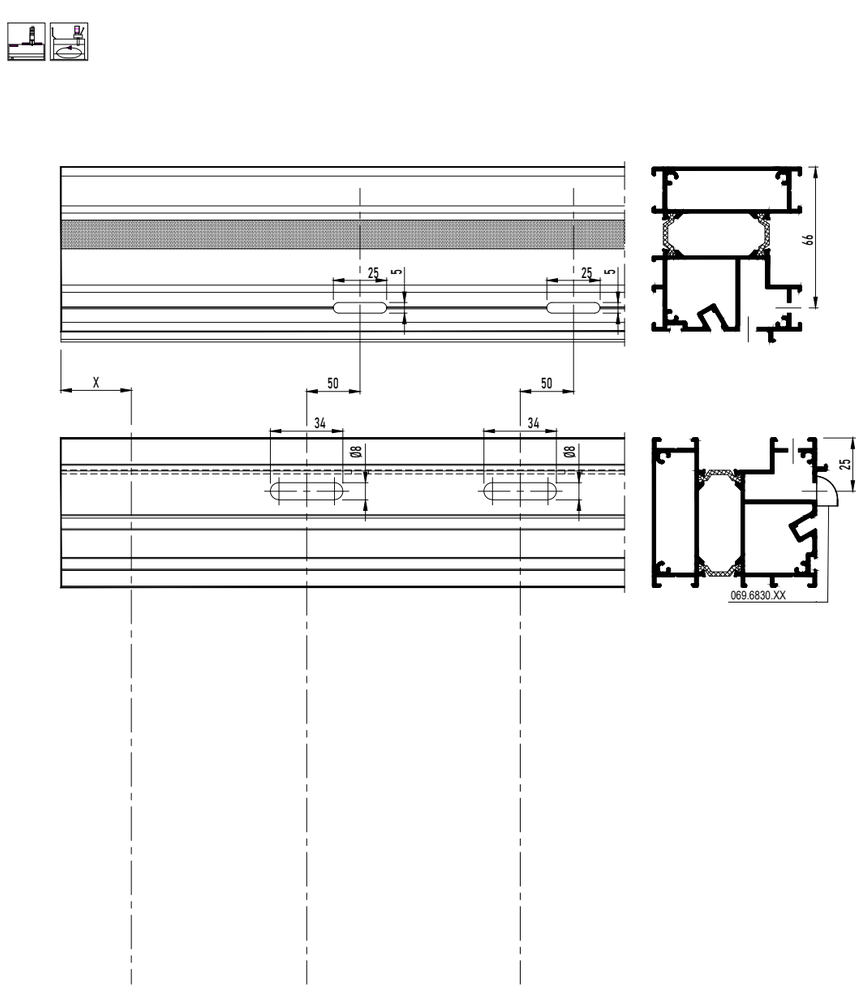

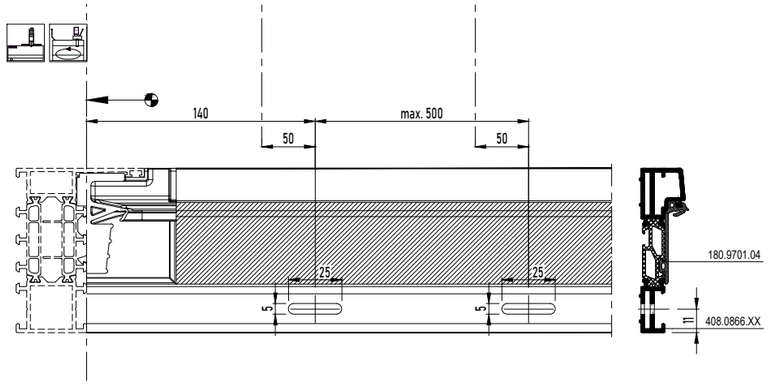

ASSEMBLY GUTTER

GUTTER ASSEMBLY

MASTERLINE 8-Fu

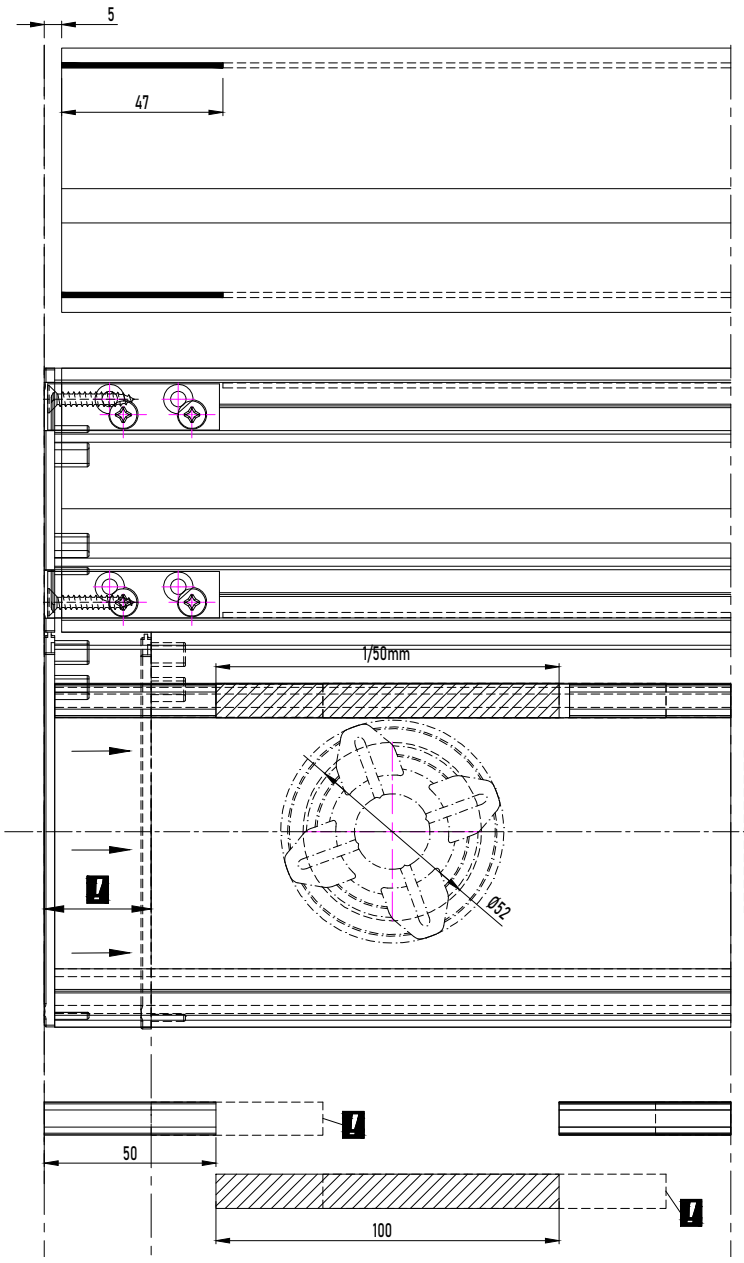

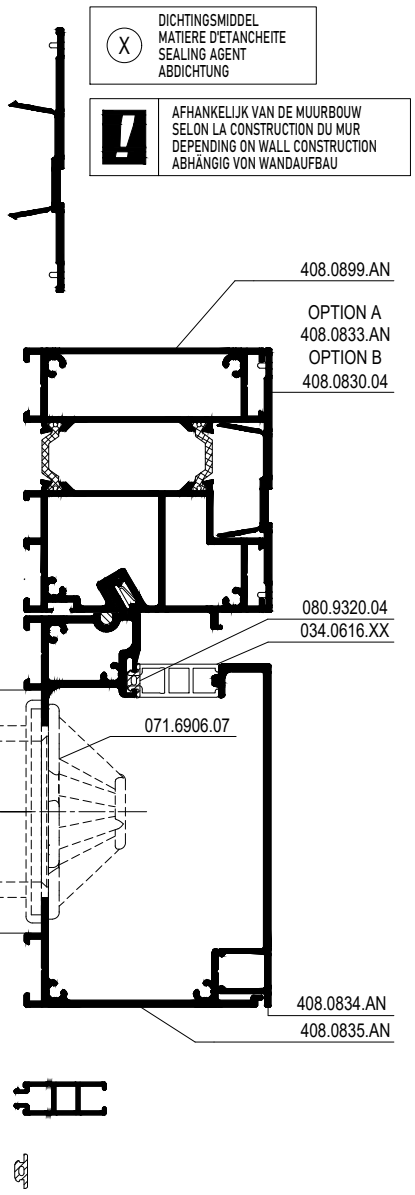

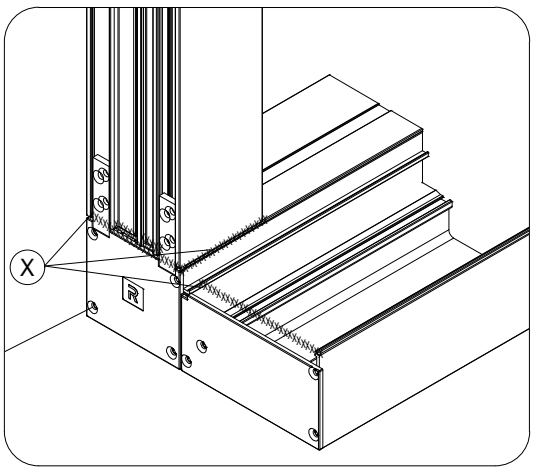

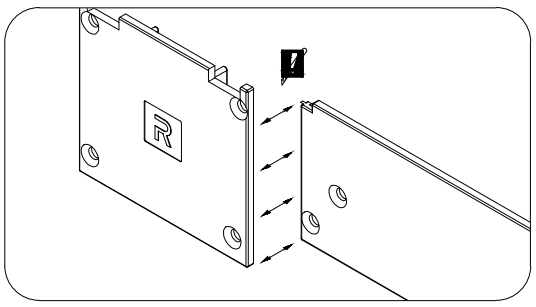

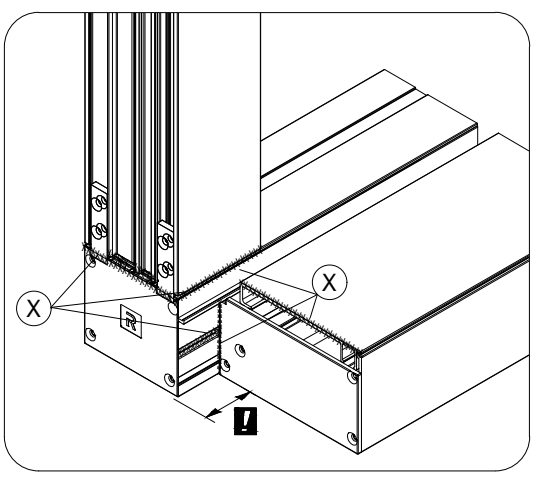

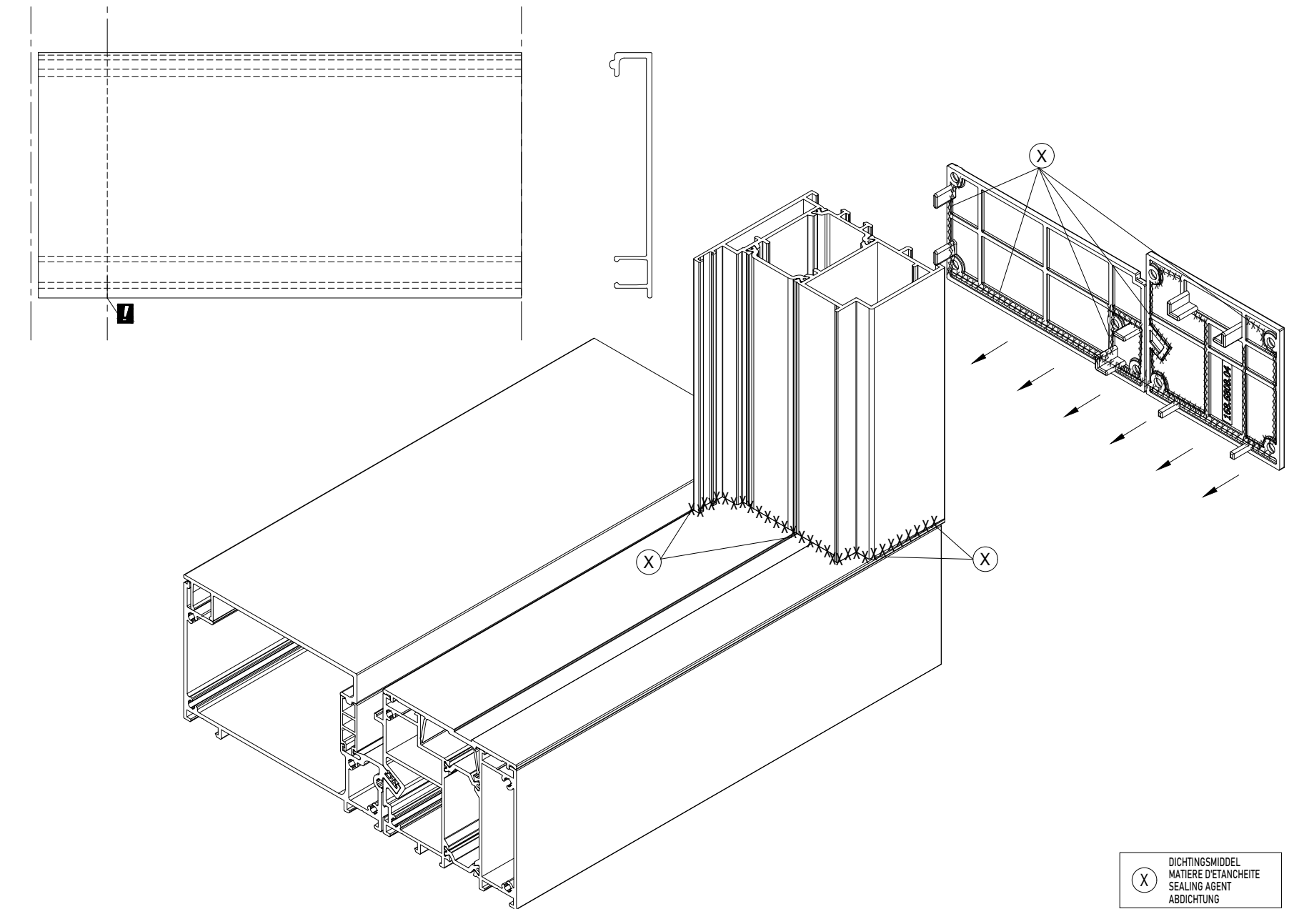

ASSEMBLY GUTTER

GUTTER ASSEMBLY

MASTERLINE 8-Fu

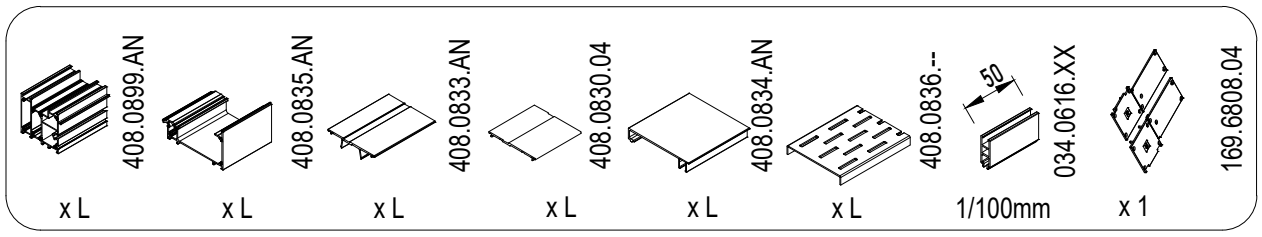

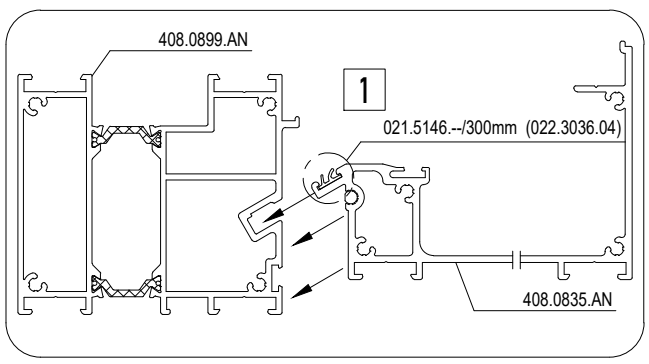

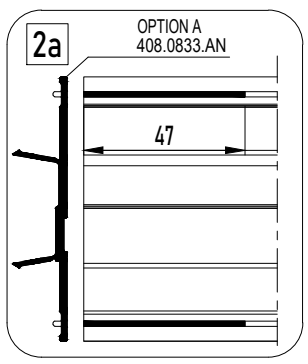

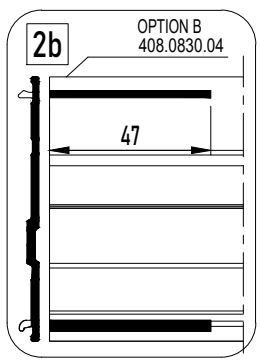

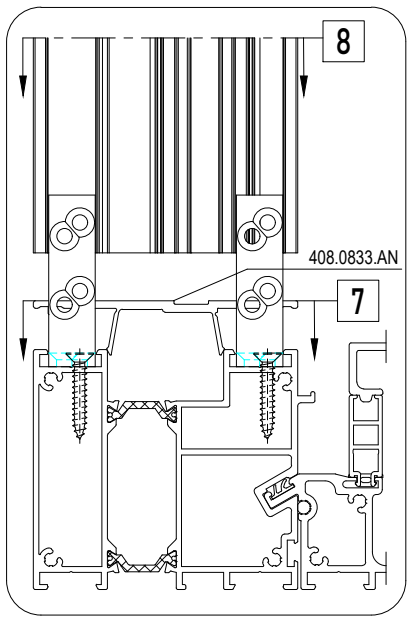

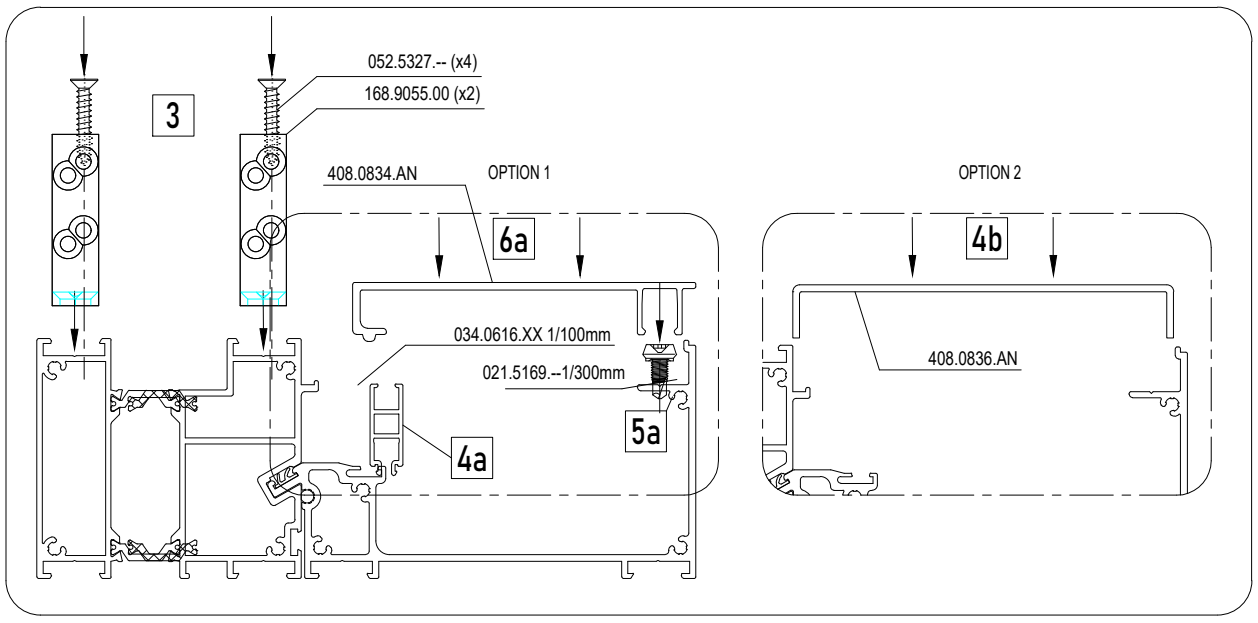

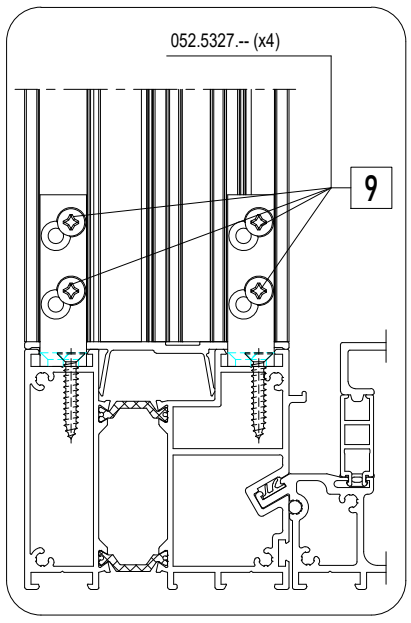

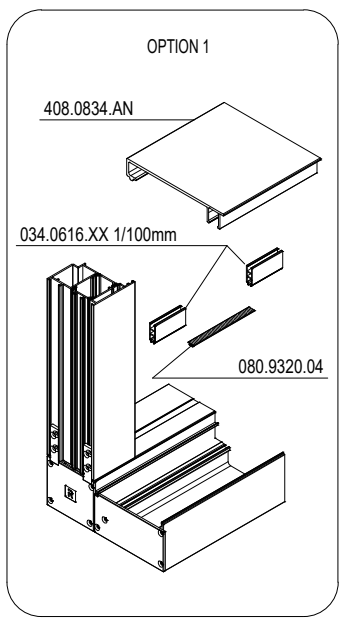

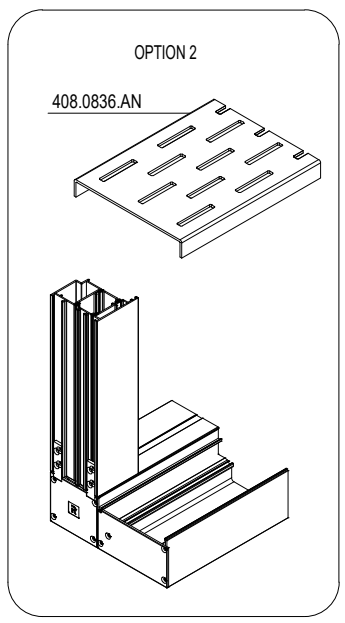

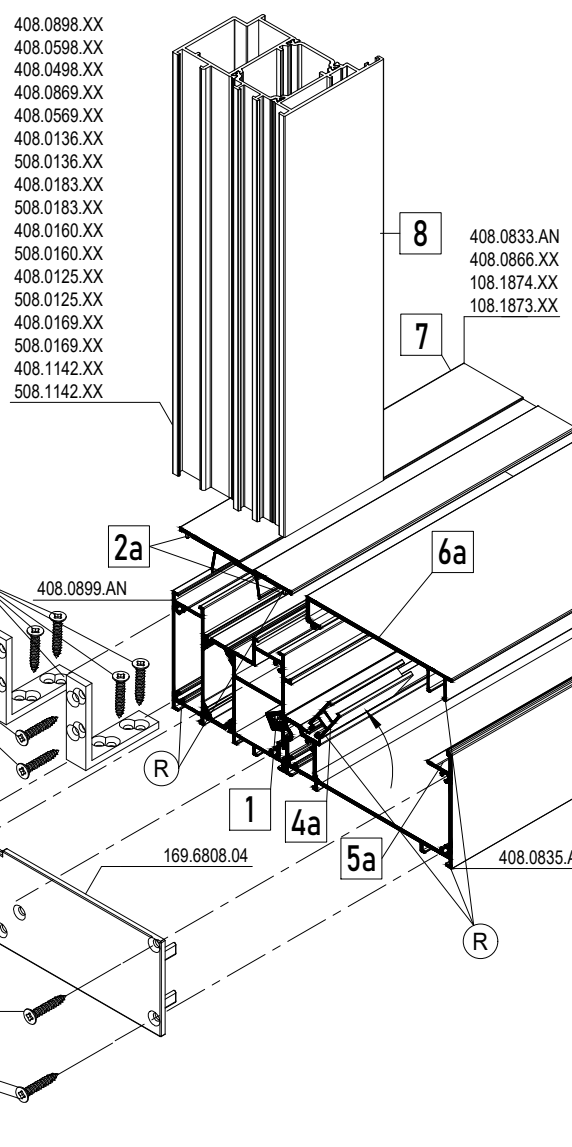

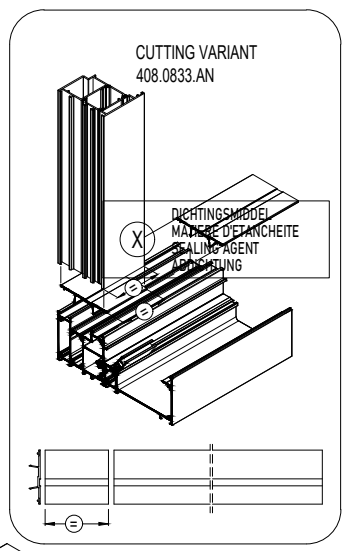

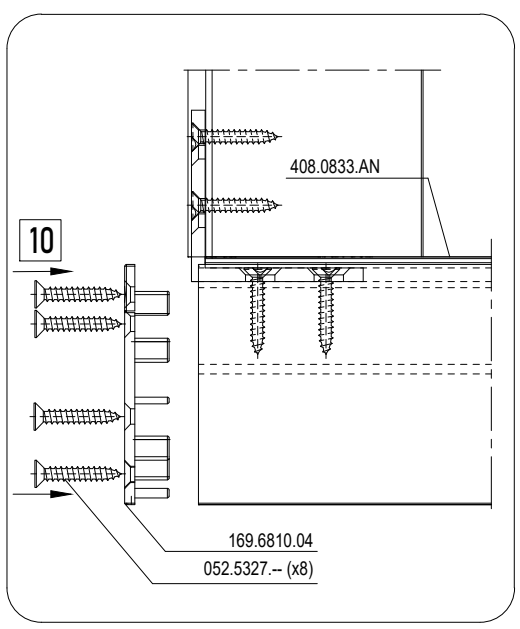

R REYNAPROTECTOR
REYNAPROTECTOR
REYNAPROTECTOR
REYNAPROTECTOR

MONTAGEVOLGORDE
L 'ORDRE DE MONTAGE
THE ORDER OF ASSEMBLY
MONTAGEREIHENFOLGE
1 2 3 .

ASSEMBLY GUTTER

GUTTER ASSEMBLY

MASTERLINE 8-Fu

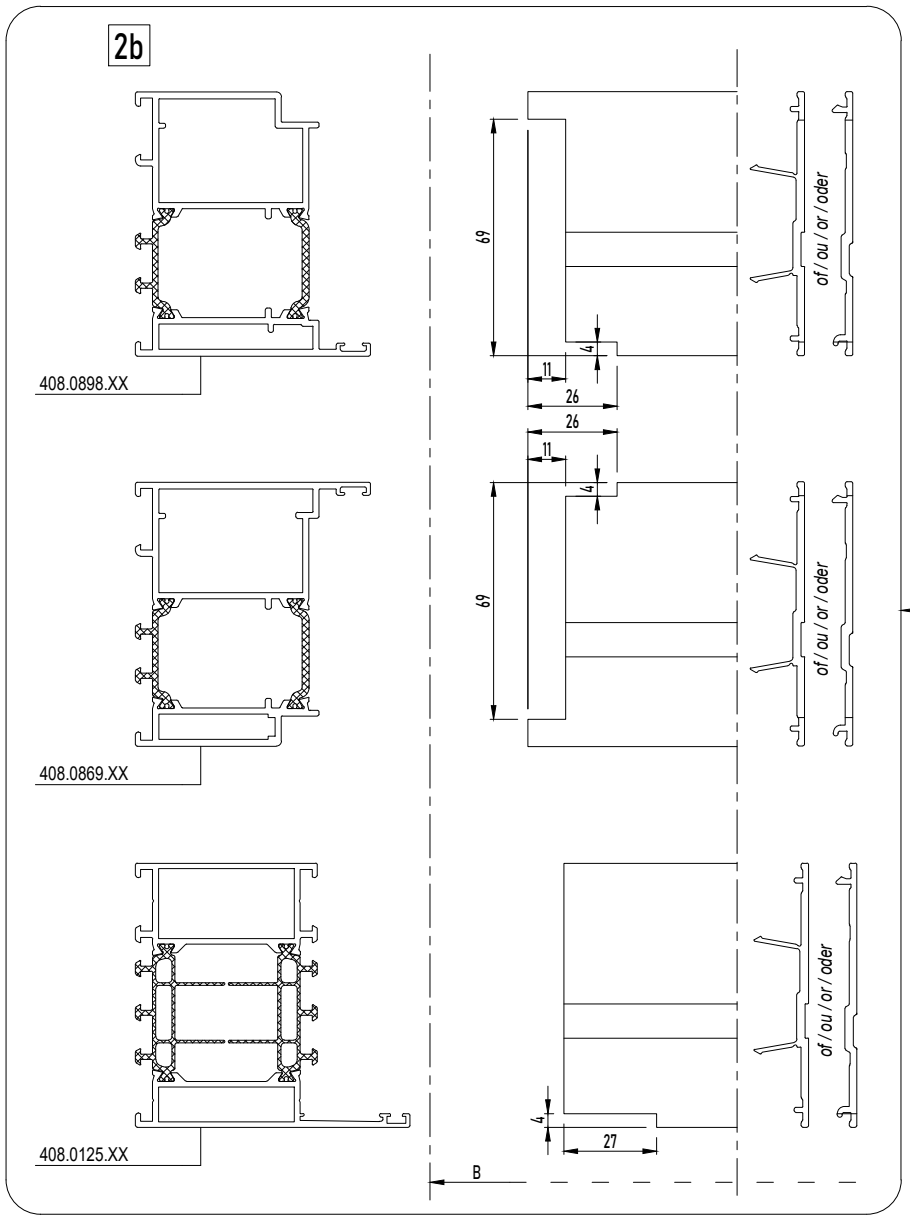

OUTER FRAME		
408.0898.XX	+ 408.0833.AN / 408.0830.04	(B - 85)
408.0598.XX	+ 408.0833.AN / 408.0830.04	(B -155)
408.0869.XX	+ 408.0833.AN / 408.0830.04	(B - 85)
408.0569.XX	+ 408.0833.AN / 408.0830.04	(B - 155)
408.0136.XX	+ 408.0833.AN / 408.0830.04	(B - 106)
508.0136.XX	+ 408.0833.AN / 408.0830.04	(B - 106)
408.0183.XX	+ 408.0833.AN / 408.0830.04	(B - 120)
508.0183.XX	+ 408.0833.AN / 408.0830.04	(B - 120)
408.0125.XX	+ 408.0833.AN / 408.0830.04	(B - 160)
508.0125.XX	+ 408.0833.AN / 408.0830.04	(B - 160)
408.0169.XX	+ 408.0833.AN / 408.0830.04	(B - 180)
508.0169.XX	+ 408.0833.AN / 408.0830.04	(B - 180)
408.1142.XX	+ 408.0833.AN / 408.0830.04	(B - 226)
508.1142.XX	+ 408.0833.AN / 408.0830.04	(B - 226)
408.0140.XX	+ 408.0833.AN / 408.0830.04	(B - 280)
508.0140.XX	+ 408.0833.AN / 408.0830.04	(B - 280)

X DICHTINGSMIDDEL
MATIERE D'ETANCHEITE
SEALING AGENT
ABDICHTUNG

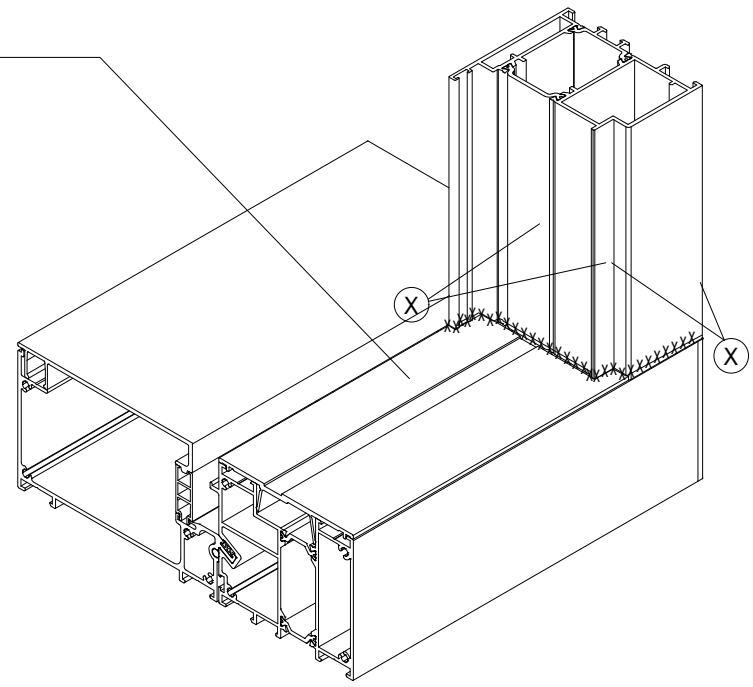

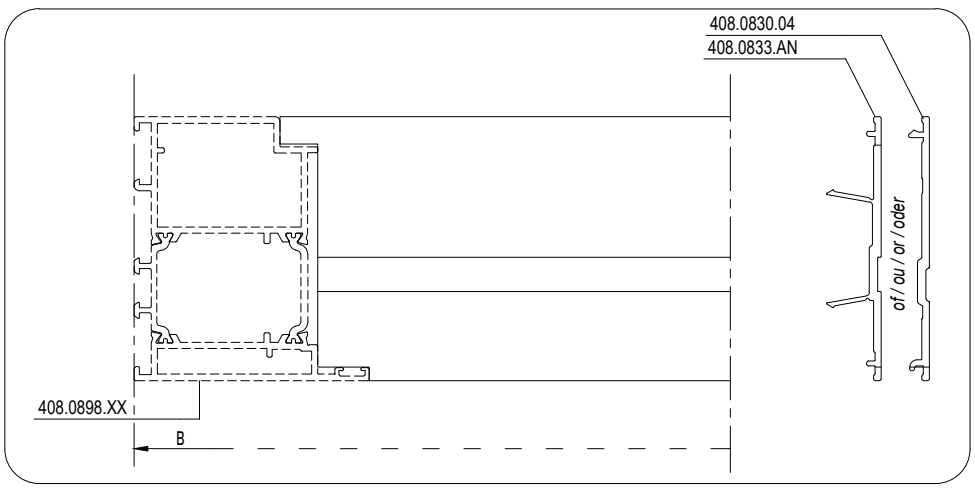

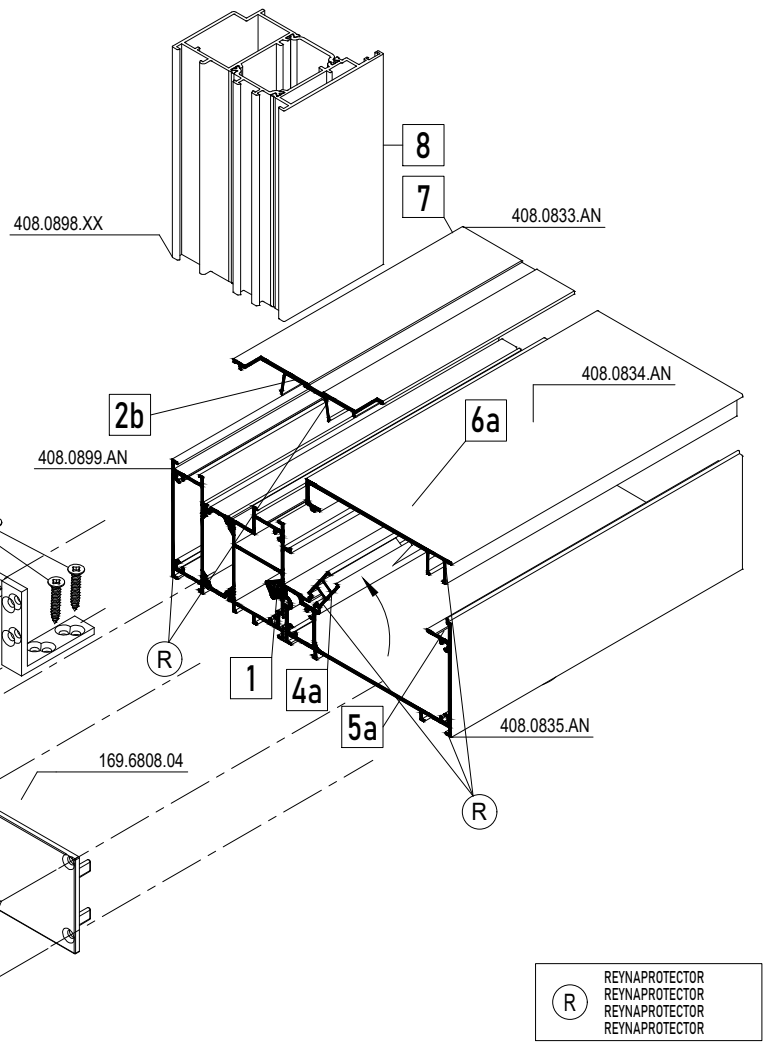

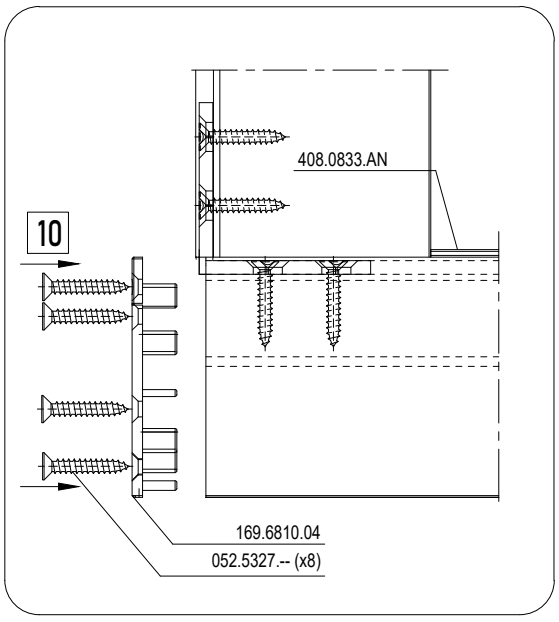

R REYNAPROTECTOR
REYNAPROTECTOR
REYNAPROTECTOR
REYNAPROTECTOR

MONTAGEVOLGORDE
L'ORDRE DE MONTAGE
THE ORDER OF ASSEMBLY
MONTAGEREIHENFOLGE
1 2 3 .

ADJUSTMENT HINGES PIVOT DOOR XL

HINGES PIVOT DOOR

MASTERLINE 8-Fu, OPENING DOORS

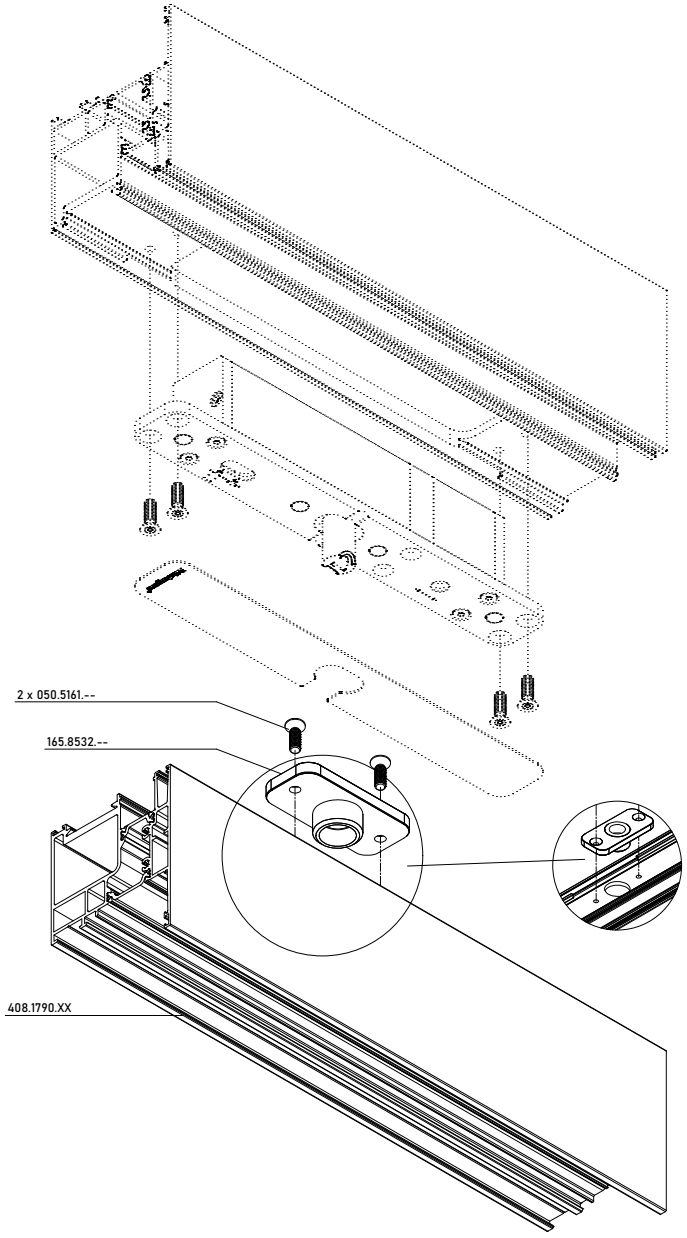

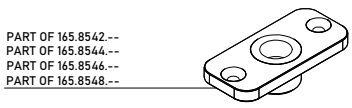

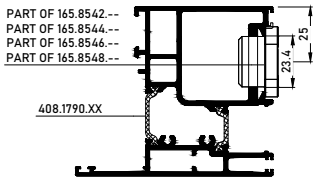

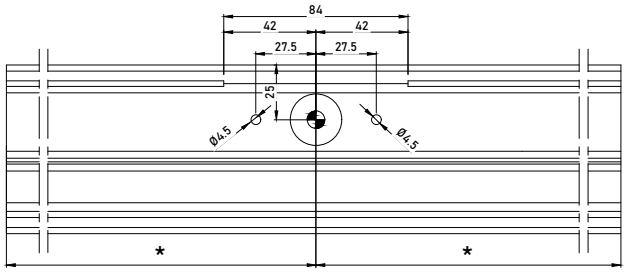

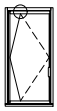

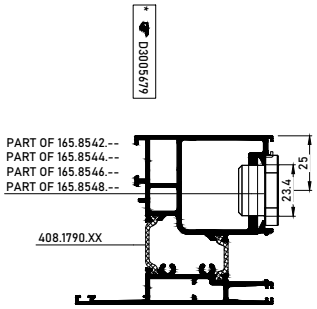

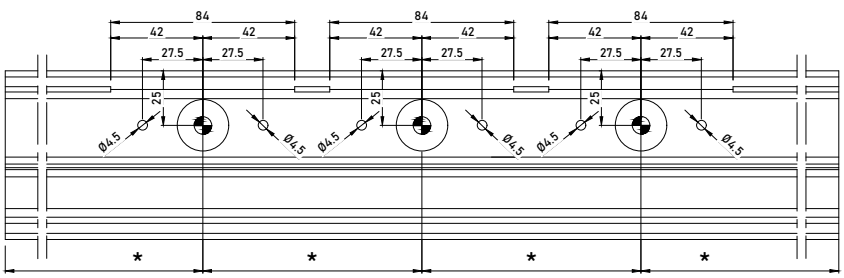

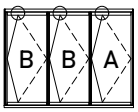

ADJUSTMENT HINGES PIVOT DOOR XL

HINGES PIVOT DOOR

MASTERLINE 8-Fu, OPENING DOORS

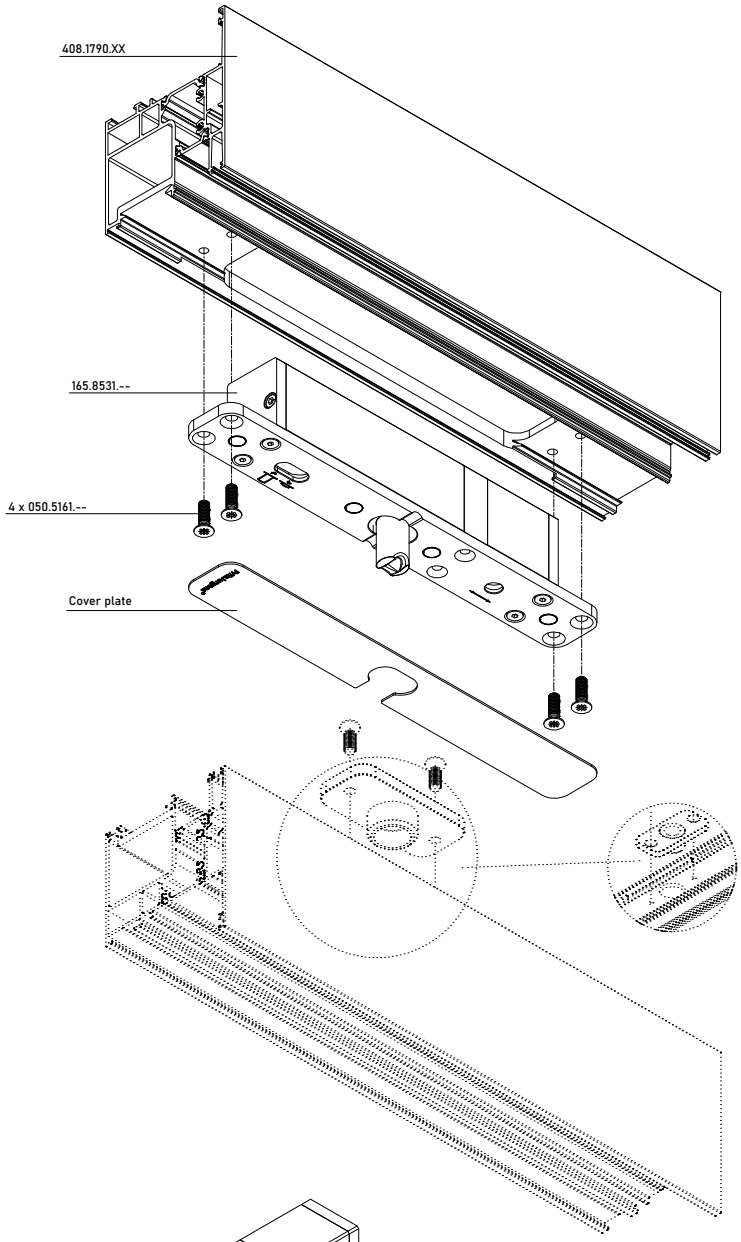

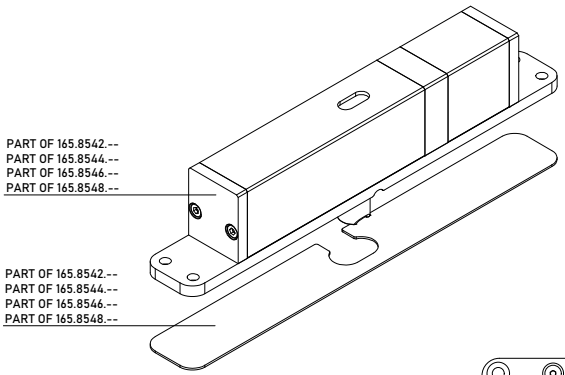

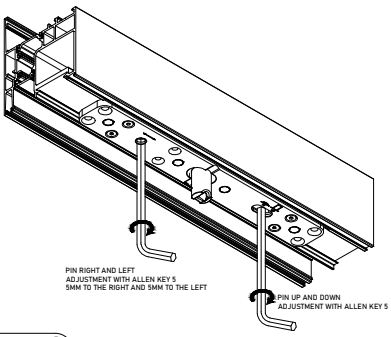

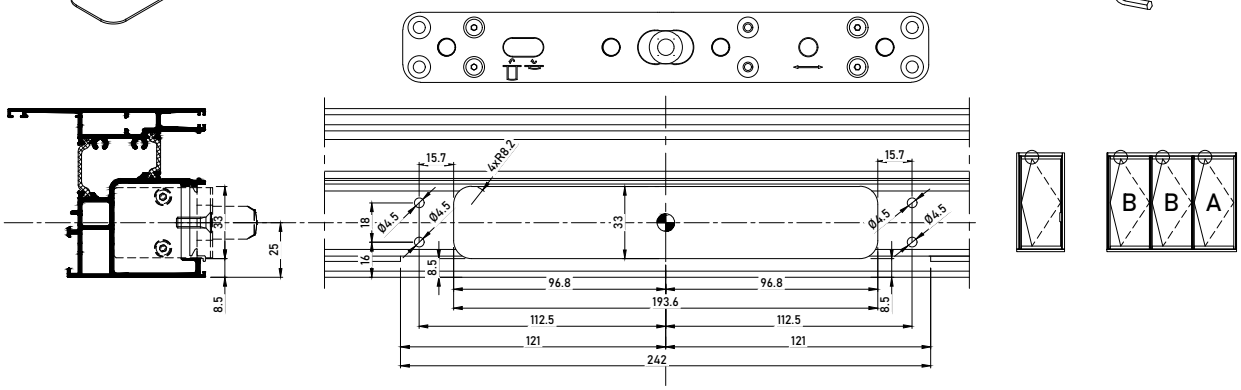

ADJUSTMENT HINGES PIVOT DOOR XL

HINGES PIVOT DOOR | 408.1790.XX, 408.0715.XX

MASTERLINE 8-Fu, OPENING DOORS

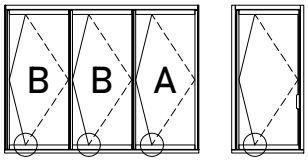

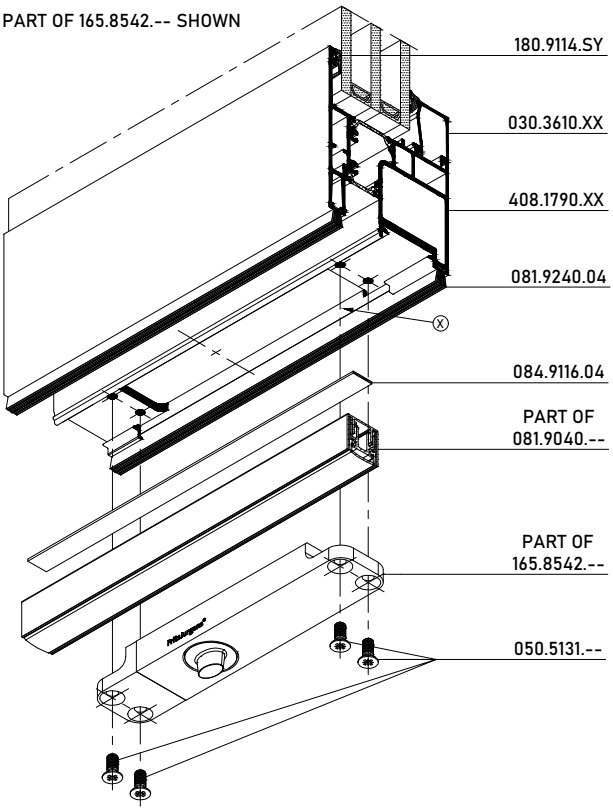

SELF-CLOSING:
PART OF 165.8544.-- SHOWN
PART OF 165.8546.-- SHOWN
PART OF 165.8548.-- SHOWN

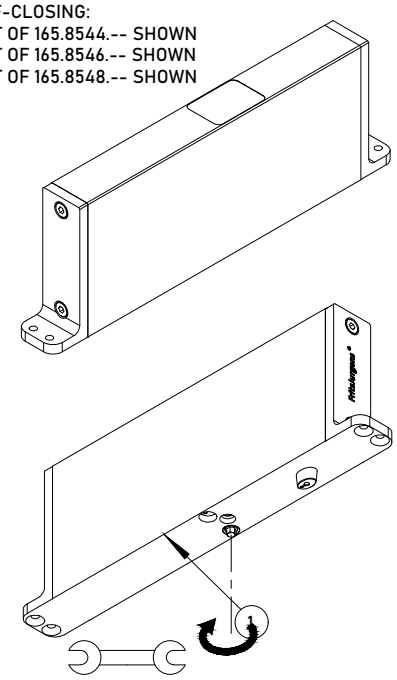

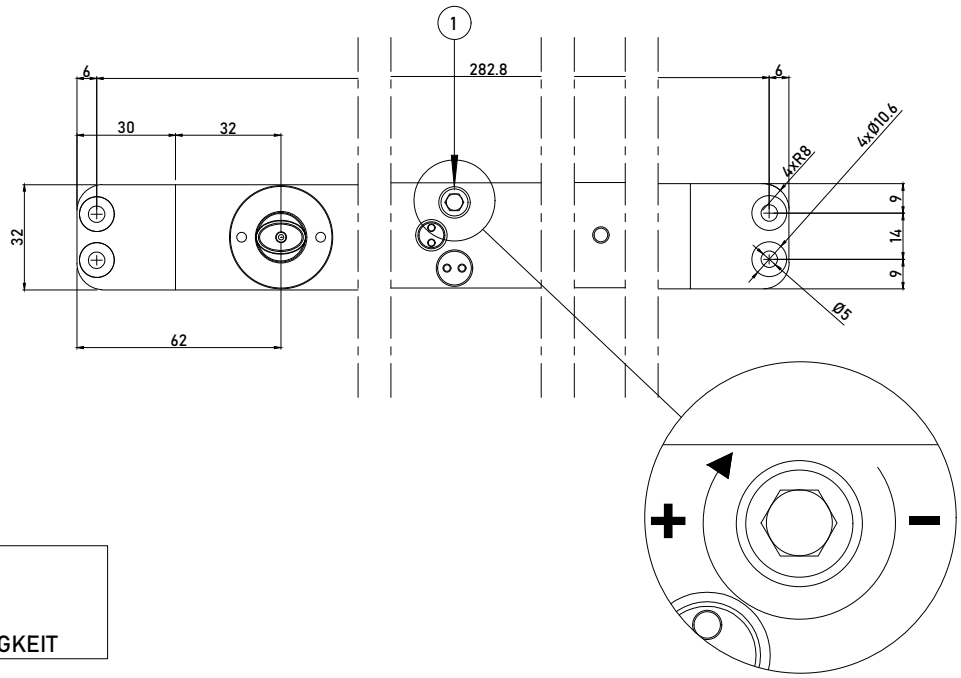

1.SLUITSNELHEID
1.VITESSE FERMETURE
1.CLOSING SPEED
1.SCHLIEßGESCHWINDIGKEIT

ADJUSTMENT HINGES PIVOT DOOR XL

HINGES PIVOT DOOR | 408.1790.XX, 408.0715.XX

MASTERLINE 8-Fu, OPENING DOORS

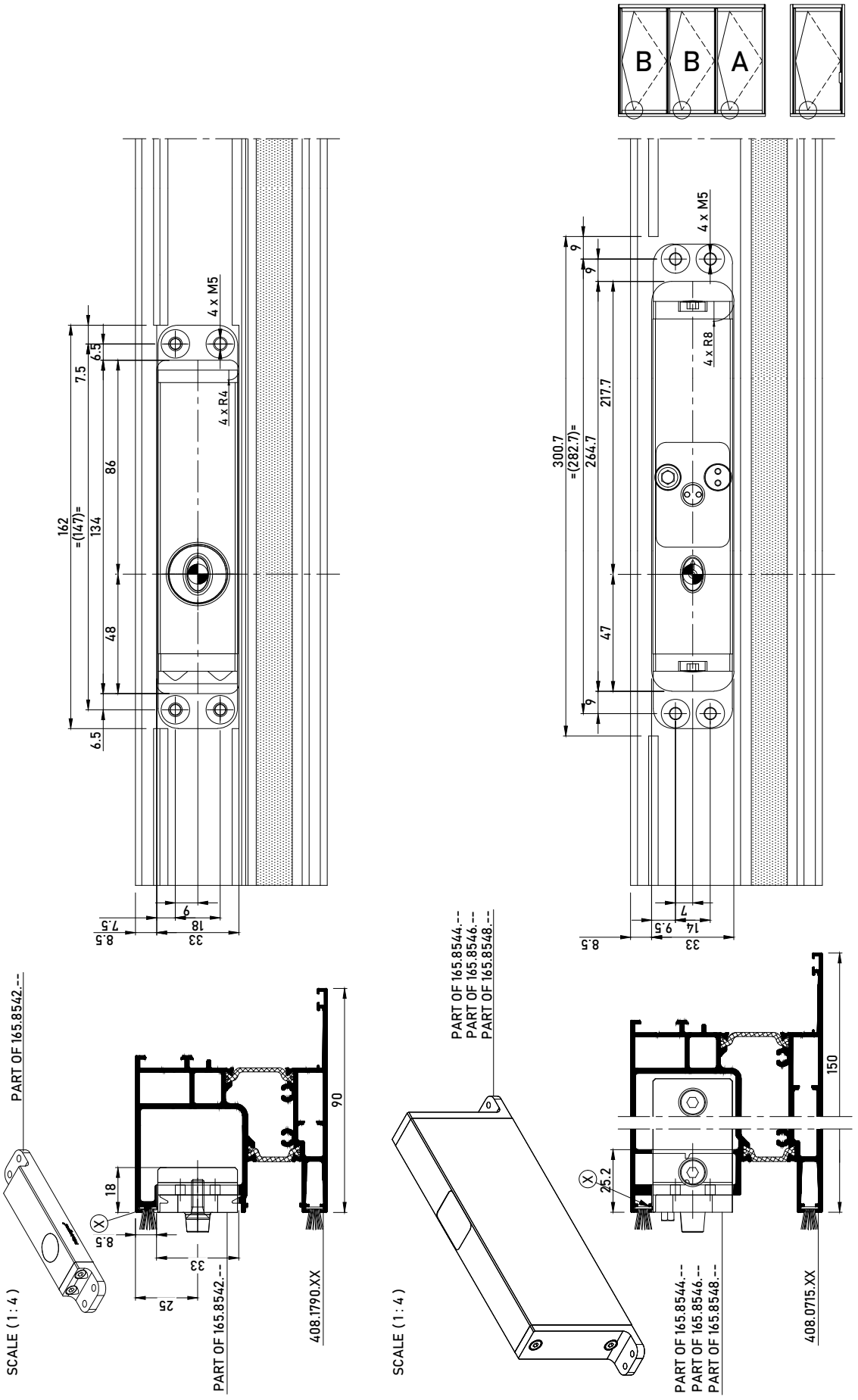

ADJUSTMENT HINGES PIVOT DOOR XL

HINGES PIVOT DOOR | 408.0899.AN

MASTERLINE 8-Fu, OPENING DOORS

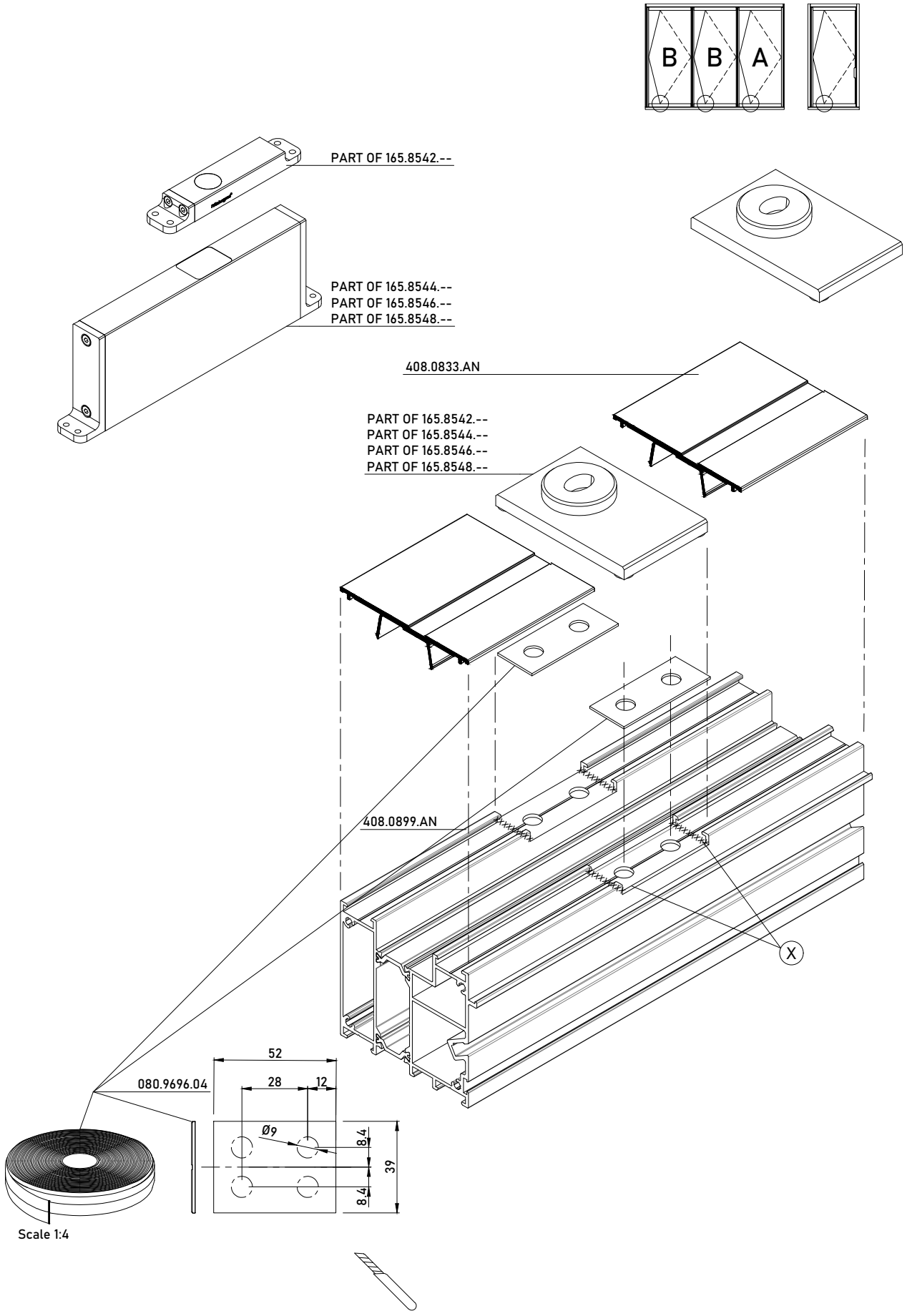

ADJUSTMENT HINGES PIVOT DOOR XL

HINGES PIVOT DOOR | 408.0899.AN

MASTERLINE 8-Fu, OPENING DOORS

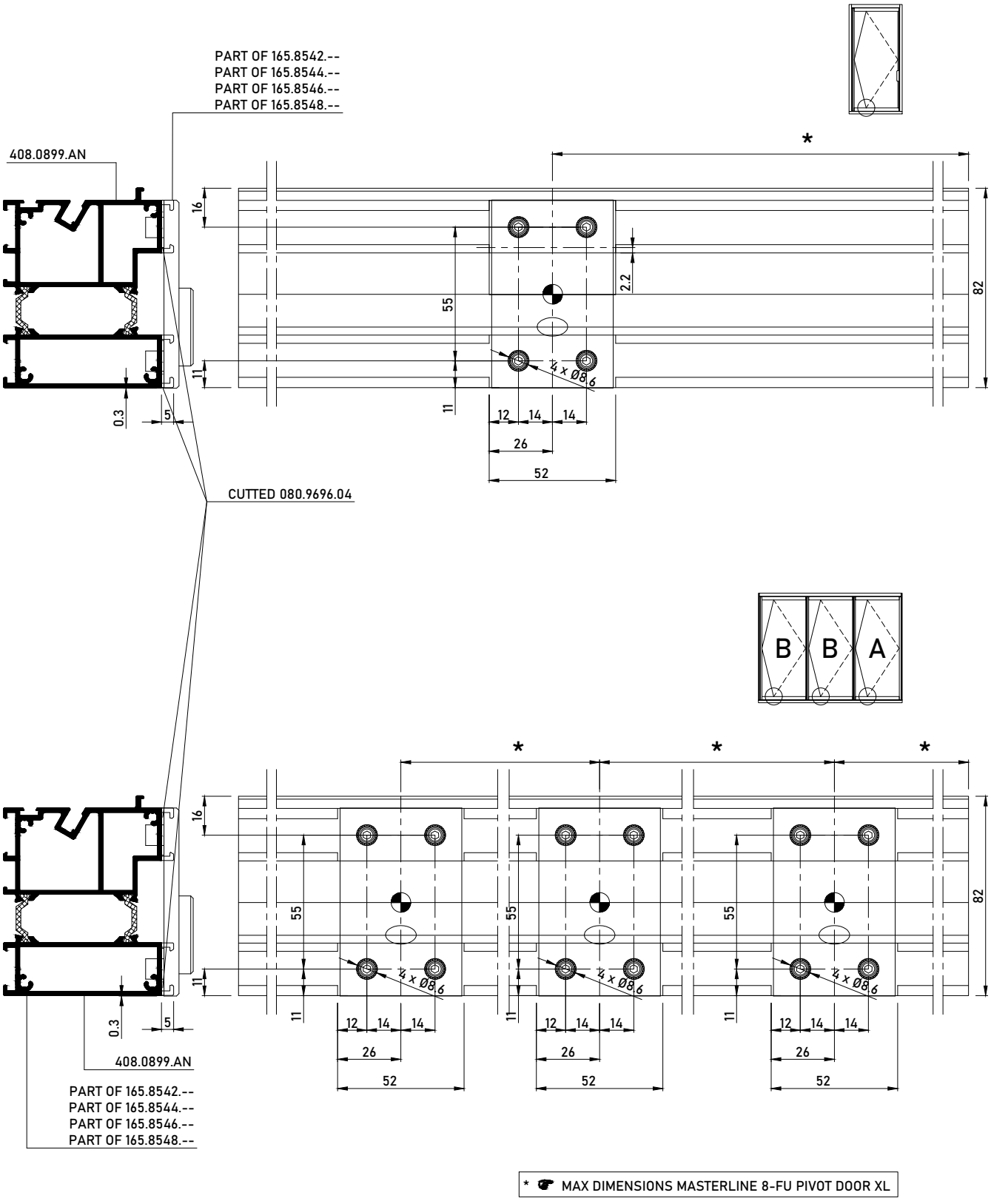

ASSEMBLY ACCESS HATCH PIVOT DOOR XL

ACCES HATCH ASSEMBLY

MASTERLINE 8-Fu

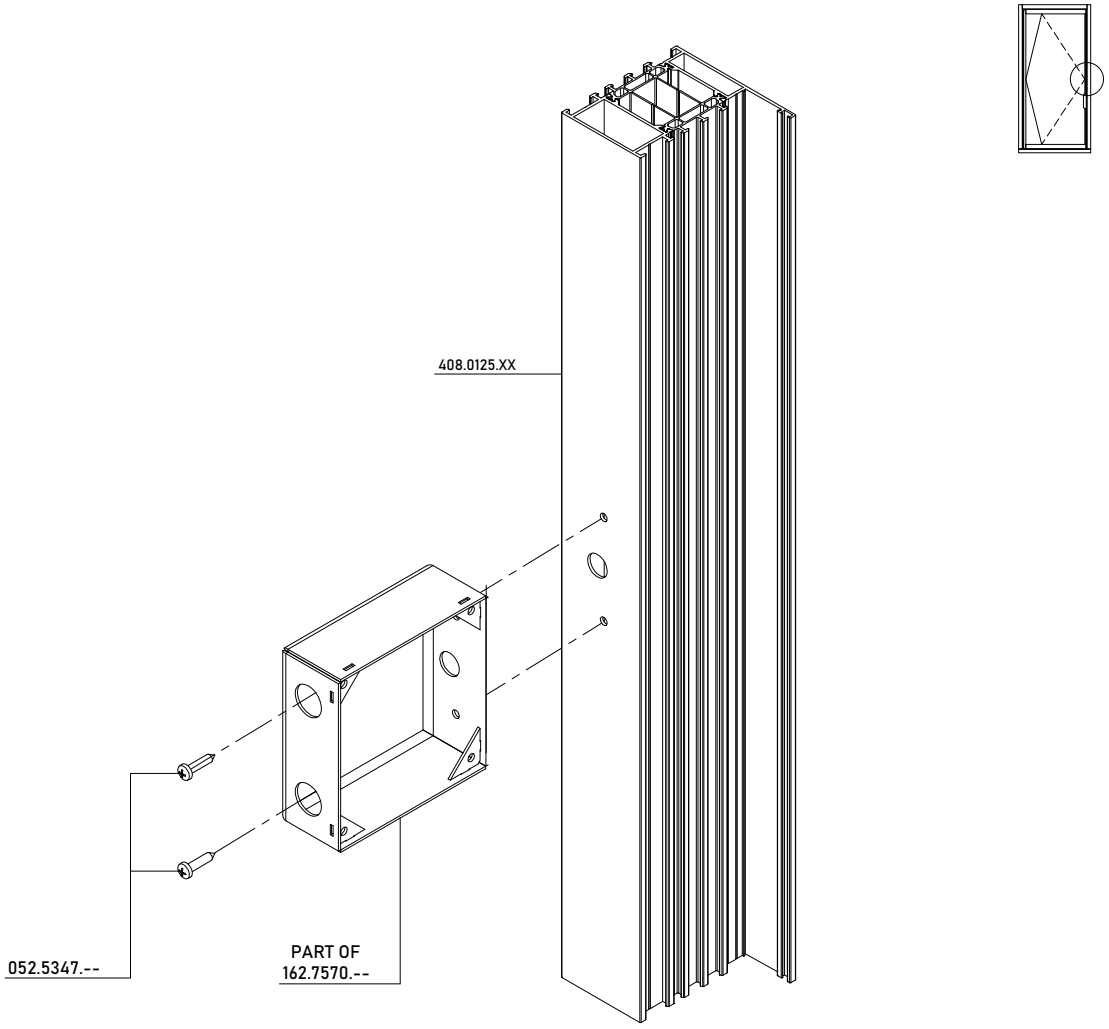

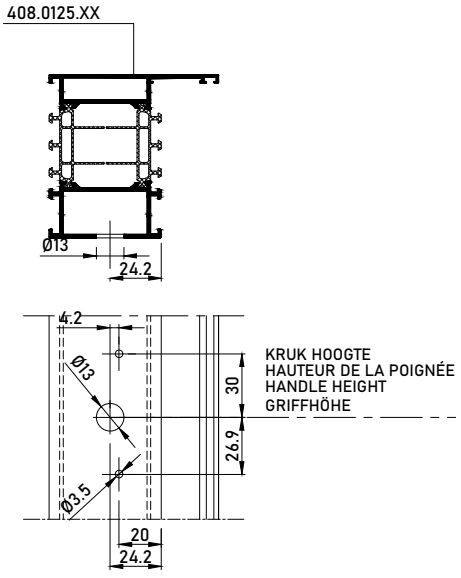

ASSEMBLY ACCESS HATCH PIVOT DOOR XL

ACCES HATCH ASSEMBLY

MASTERLINE 8-Fu

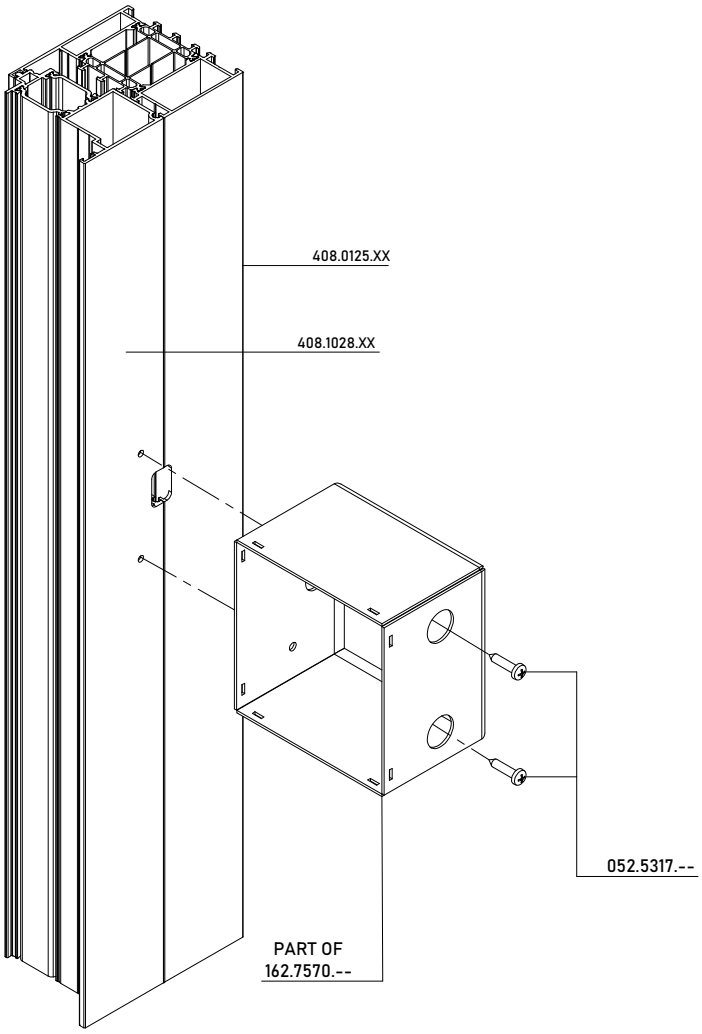

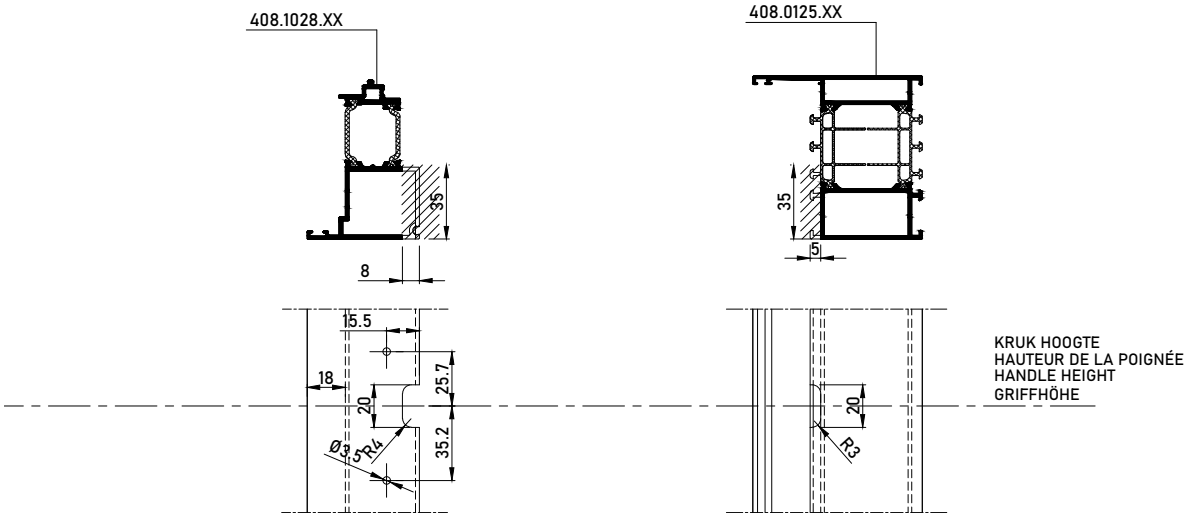

ASSEMBLY BASE UNIT 90°

ASSEMBLING BASE UNIT 90°

MASTERLINE 8-Fu, MASTERWALL, SlimLine 38

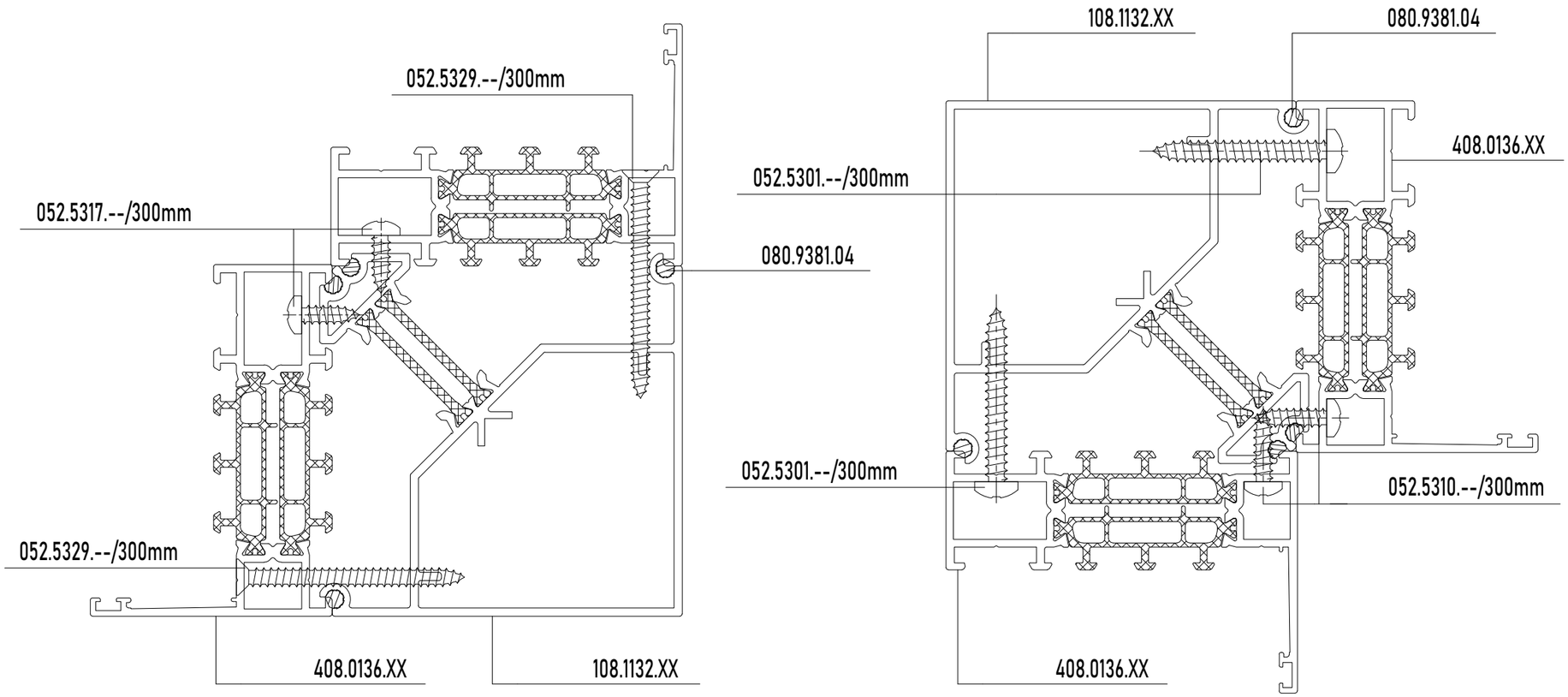

ASSEMBLY COMBINED FRAME BALCONY DOOR 2024

ASSEMBLY COMBINED FRAME - BALCONY DOOR + HIDDEN VENT

MASTERLINE 8-Fu, MASTERLINE 8-HV

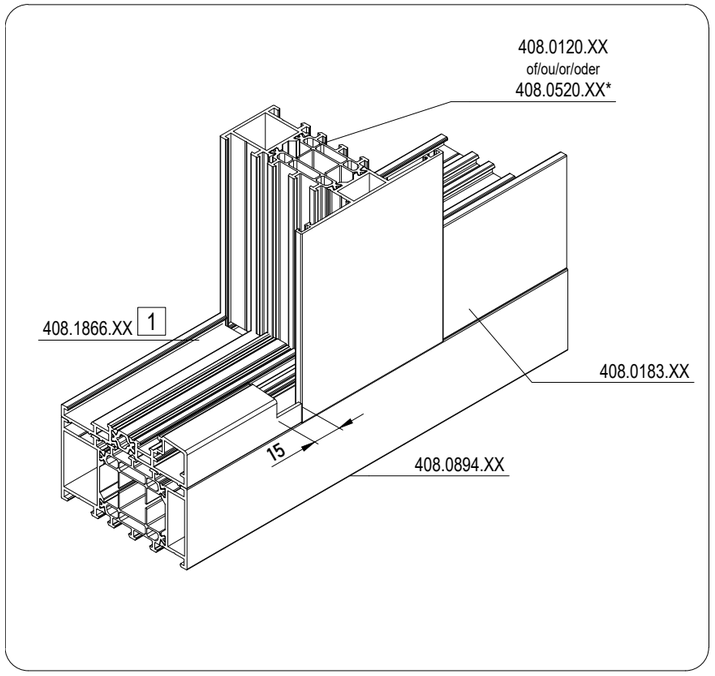

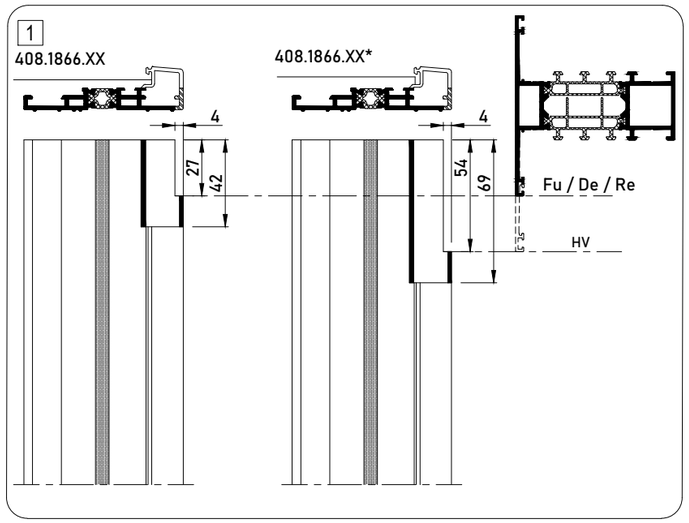

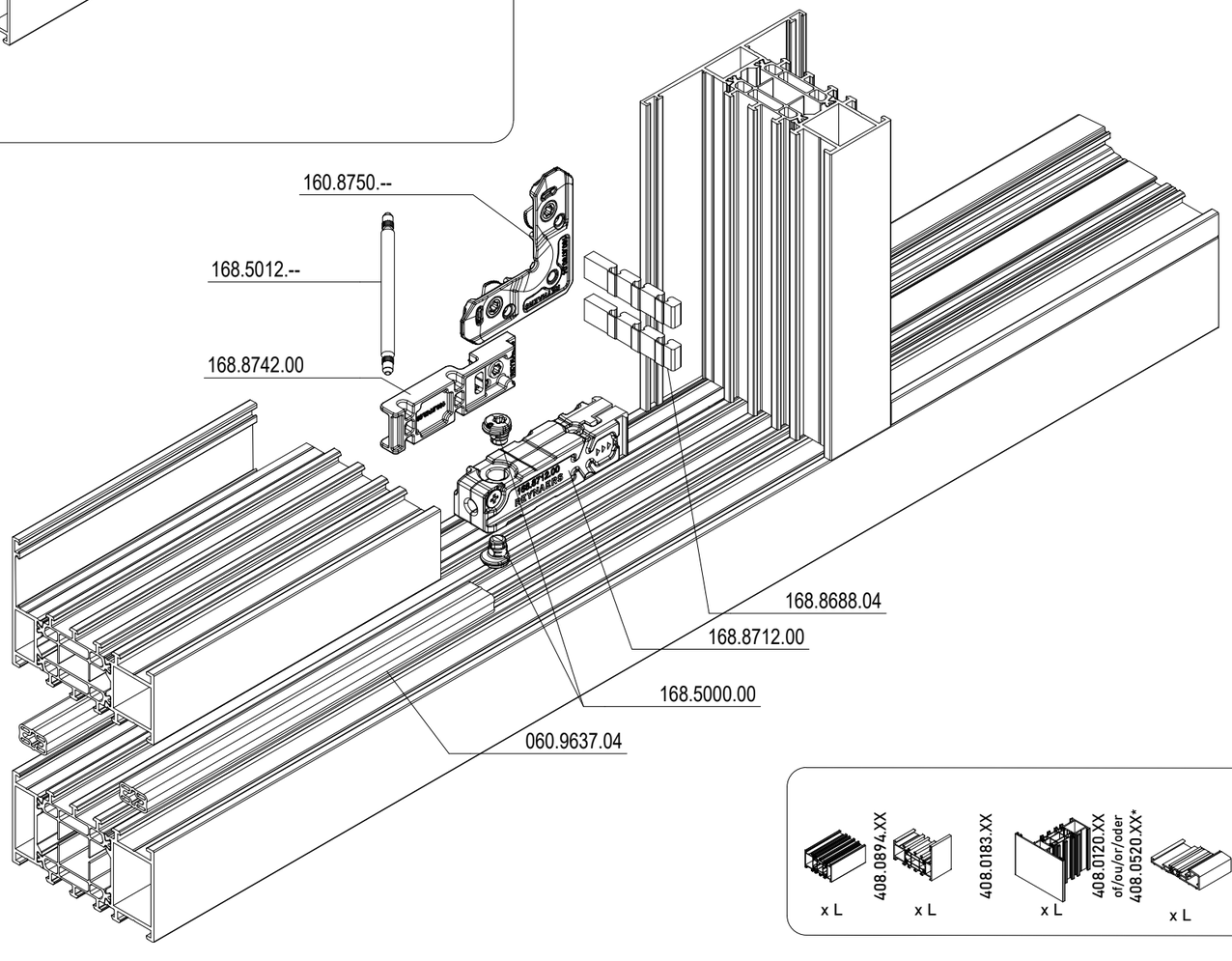

VERBORGEN VLEUGEL*
OUVRANT CACHE*
HIDDEN VENT*
VERSTECKTE ENTLÜFTUNG*

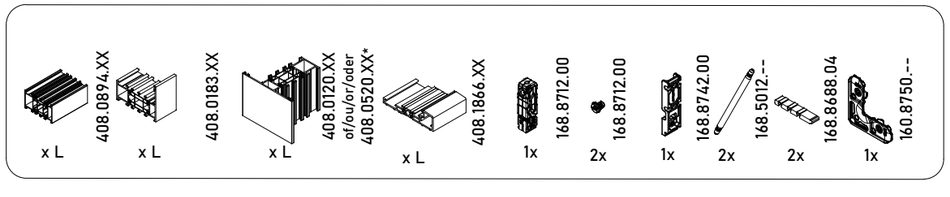

ASSEMBLY COMBINED FRAME BALCONY DOOR 2024

ASSEMBLY COMBINED FRAME - BALCONY DOOR + HIDDEN VENT

MASTERLINE 8-Fu, MASTERLINE 8-HV

VERBORGEN VLEUGEL*
OUVRANT CACHE*
HIDDEN VENT*
VERSTECKTE ENTLÜFTUNG*

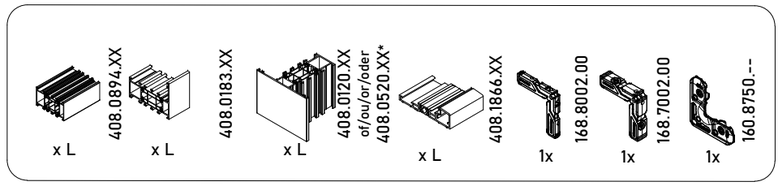

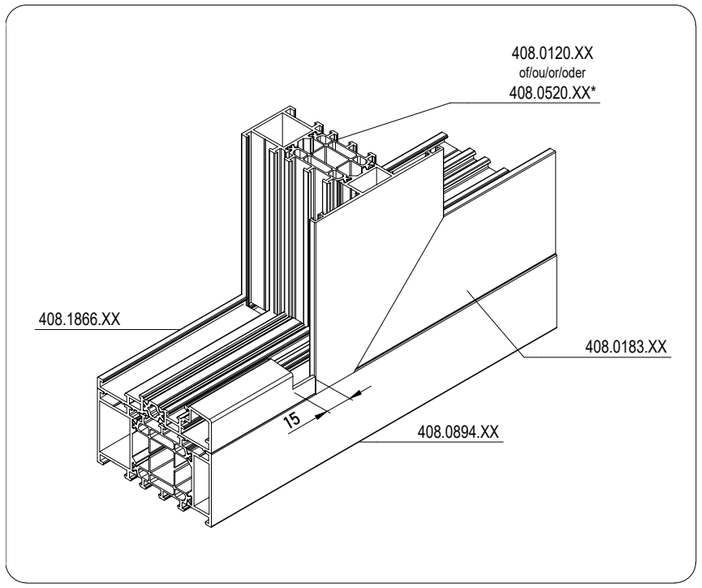

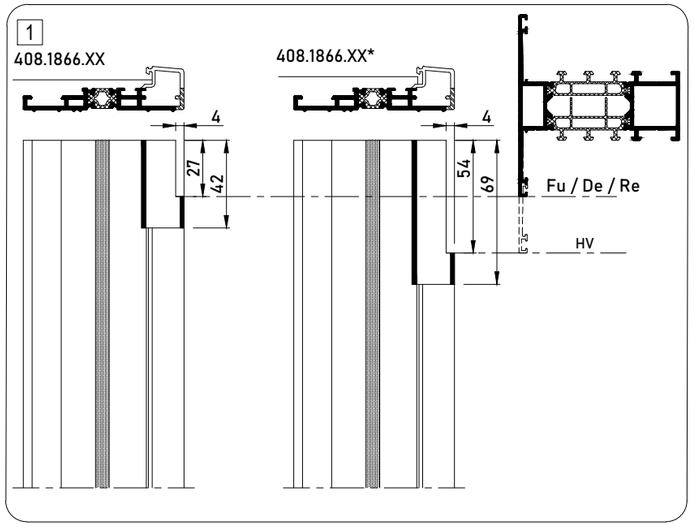

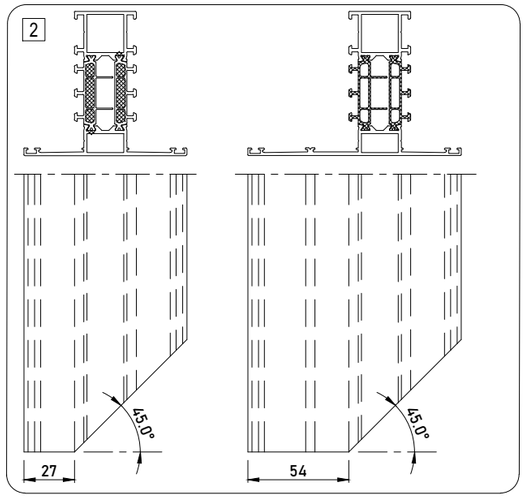

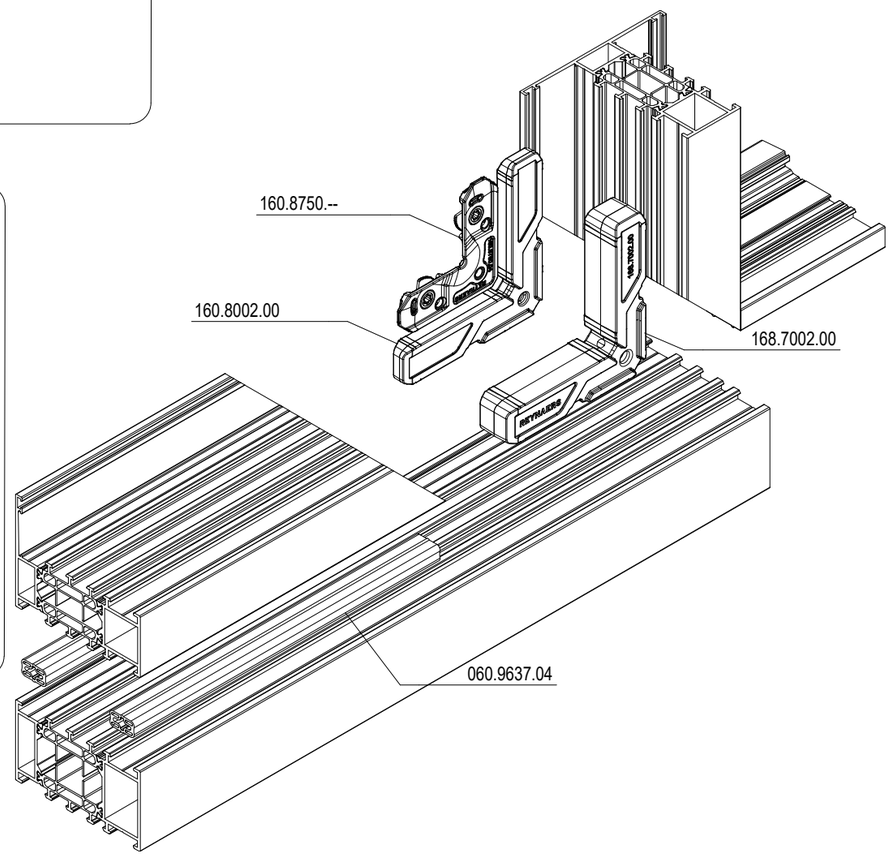

ASSEMBLY COMBINED FRAME BALCONY DOOR 2024

ASSEMBLY COMBINED FRAME - BALCONY DOOR + HIDDEN VENT

MASTERLINE 8-Fu, MASTERLINE 8-HV

2 BUITENKADER DORMANT OUTER FRAME BLENDRAHMEN	1 FREZING 408.1866.XX FRAISAGE 408.1866.XX MILLING 408.1866.XX FRAESUNG 408.1866.XX	T-VERBINDER JONCTION-T T-BRACKET T-VERBINDER
408.0183.XX	D + 15	168.8711.00 168.8721.00
408.0160.XX	D + 15	168.8712.00 168.8742.00
408.0125.XX	D + 15	168.8713.00 168.8743.00

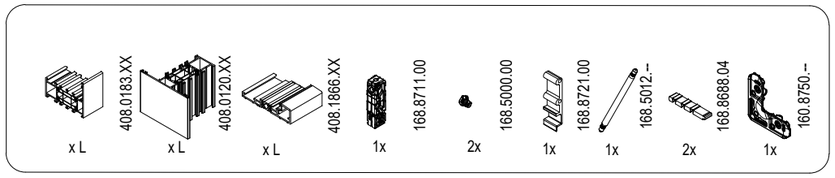

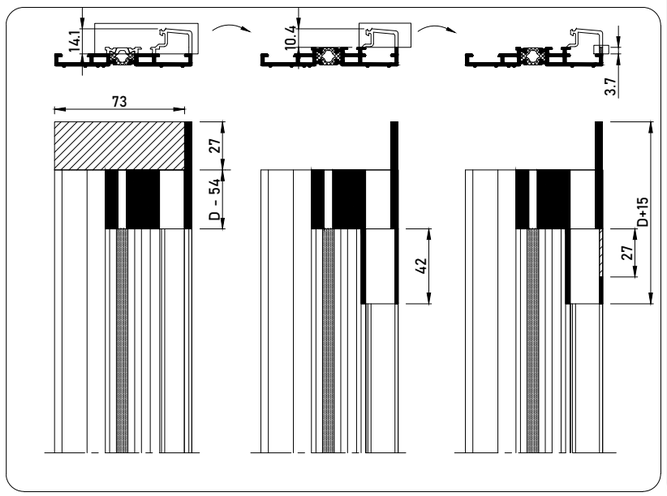

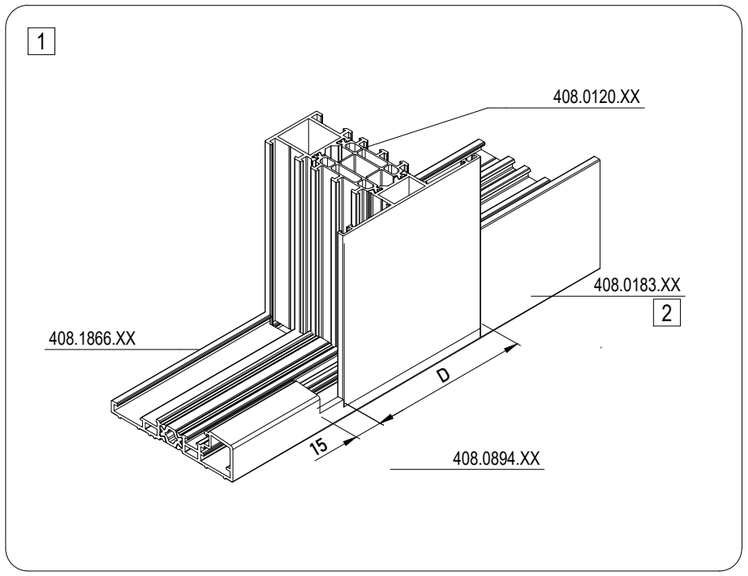

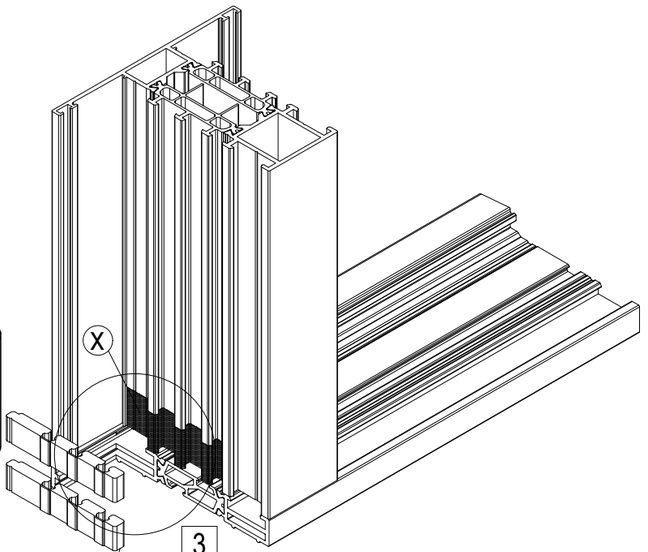

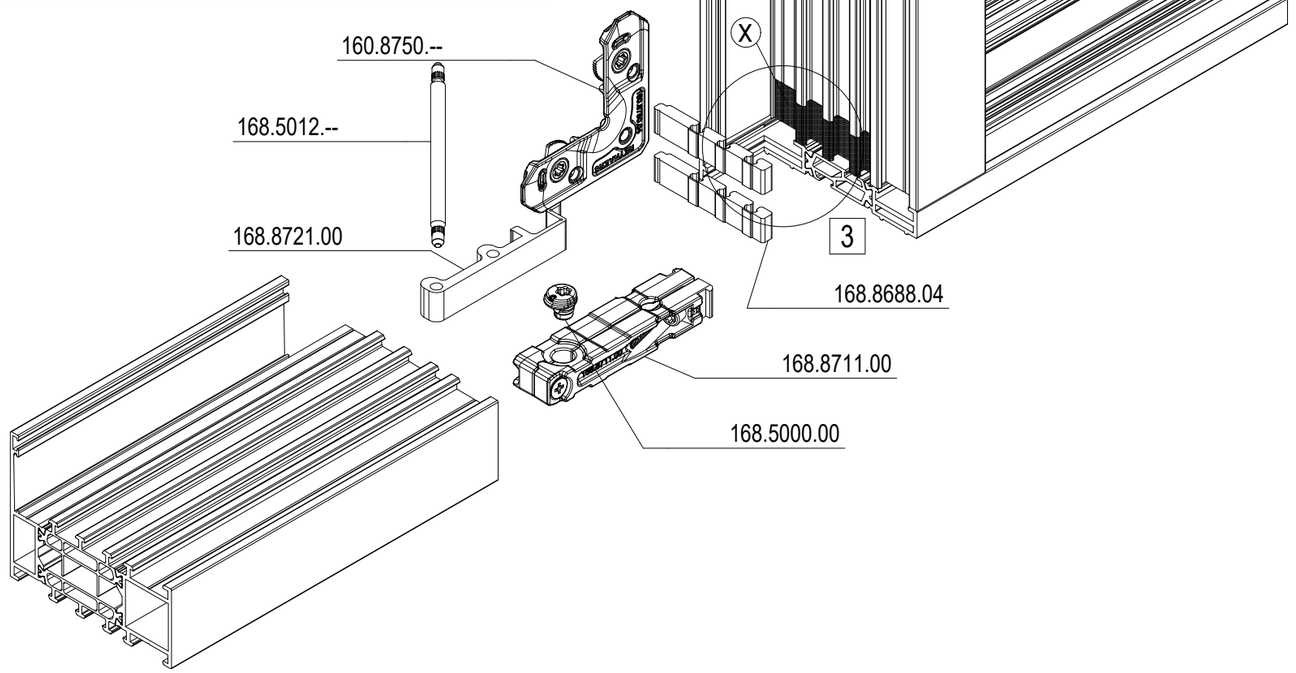

ASSEMBLY COMBINED FRAME BALCONY DOOR 2024

ASSEMBLY COMBINED FRAME - BALCONY DOOR + HIDDEN VENT

MASTERLINE 8-Fu, MASTERLINE 8-HV

2 BUITENKADER DORMANT OUTER FRAME BLENDRAHMEN	1 FREZING 408.1866.XX FRAISAGE 408.1866.XX MILLING 408.1866.XX FRAESUNG 408.1866.XX	T-VERBINDER JONCTION-T T-BRACKET T-VERBINDER
408.0183.XX	D + 15	168.8711.00 168.8721.00
408.0160.XX	D + 15	168.8712.00 168.8742.00
408.0125.XX	D + 15	168.8713.00 168.8743.00

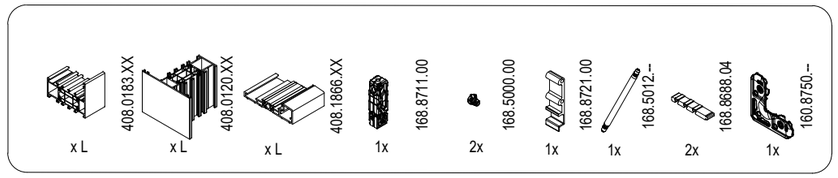

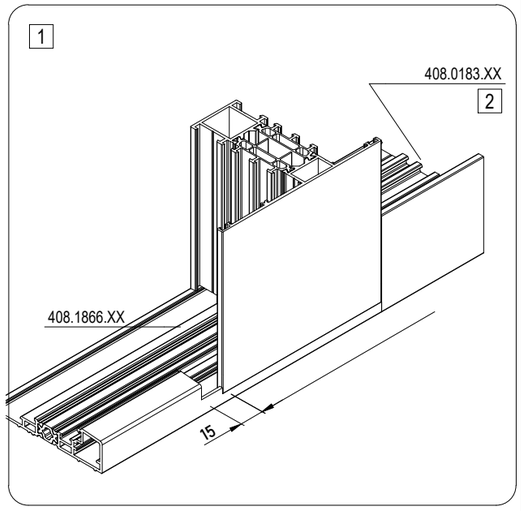

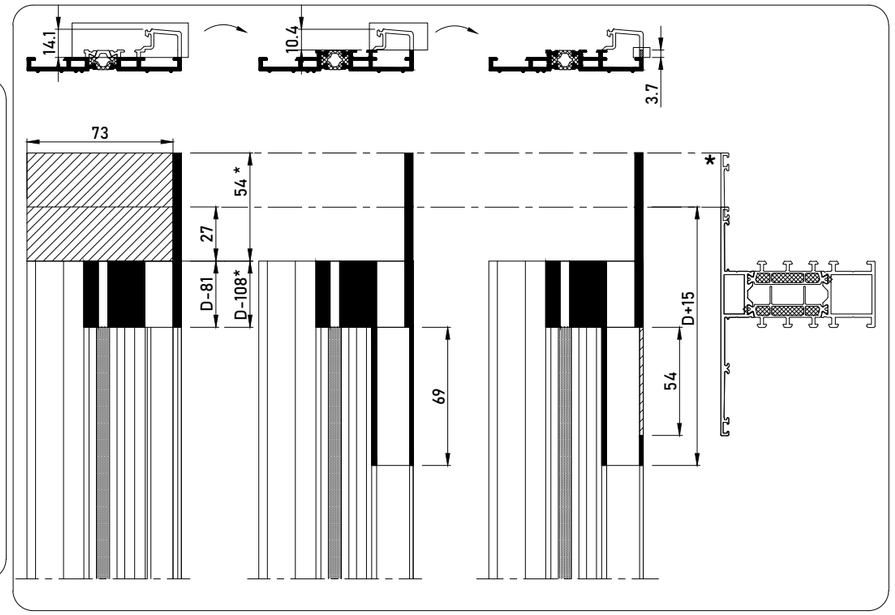

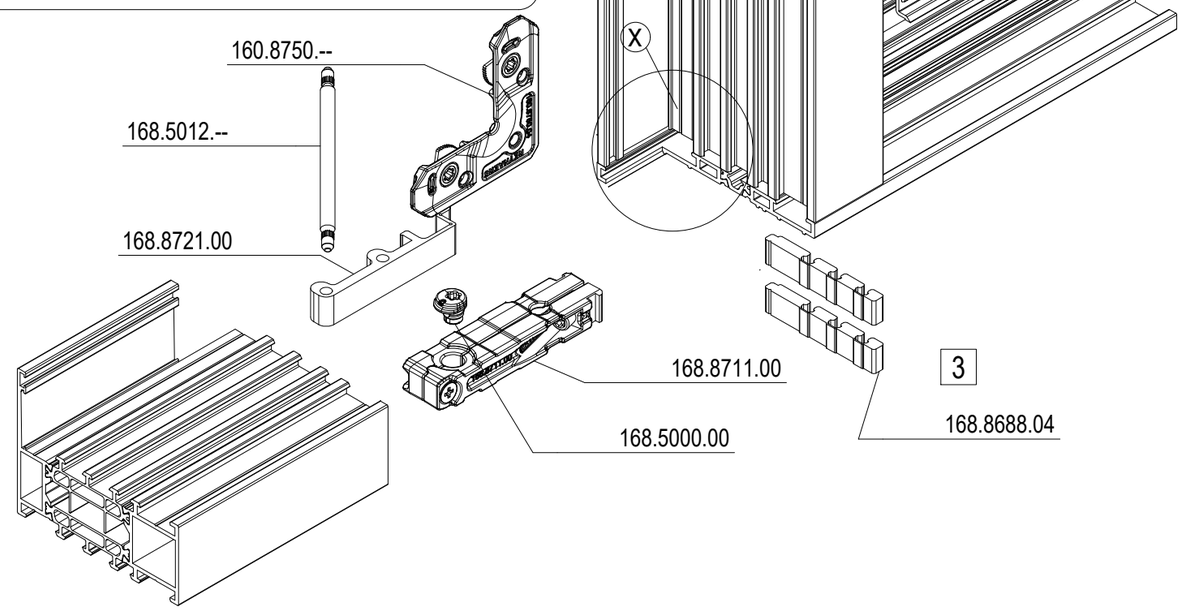

ASSEMBLY END PIECE BALCONY DOOR 2024

ASSEMBLY VENT END PIECES - ADA

MASTERLINE 8-Fu

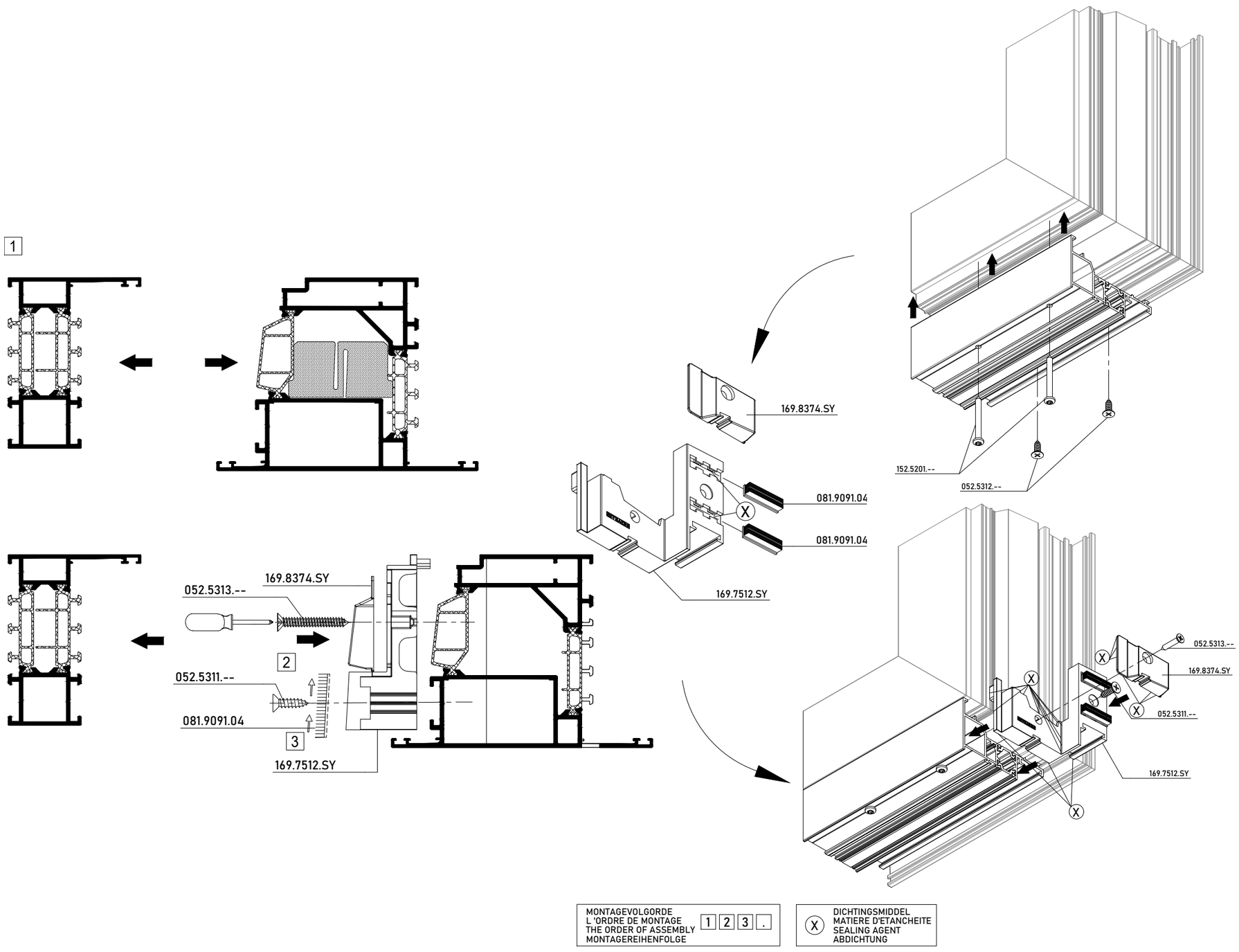

MONTAGEVOLGORDE
L 'ORDRE DE MONTAGE
THE ORDER OF ASSEMBLY
MONTAGEREIHENFOLGE
1 2 3 .

X DICHTINGSMIDDEL
MATIERE D'ETANCHEITE
SEALING AGENT
ABDICHTUNG

ASSEMBLY END PIECE BALCONY DOOR 2024

ASSEMBLY VENT END PIECES - ADA

MASTERLINE 8-Fu

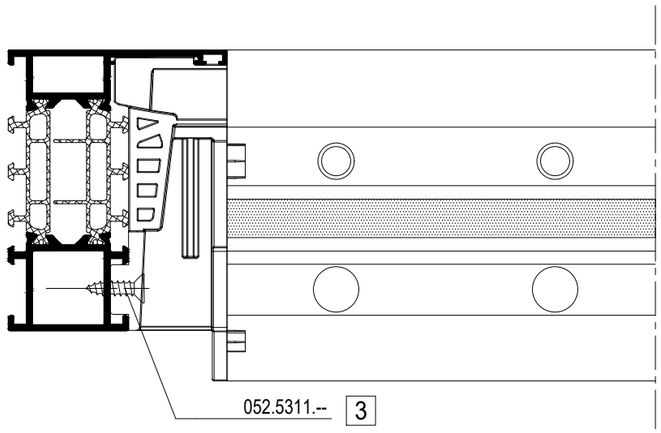

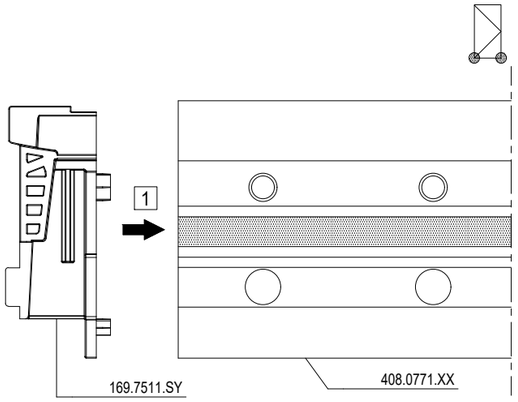

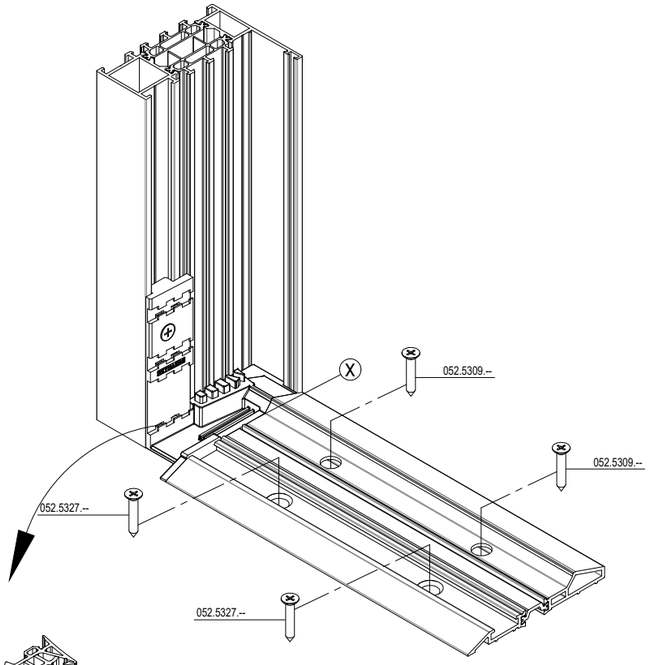

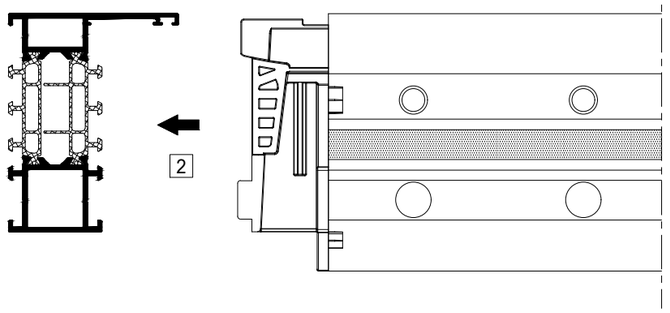

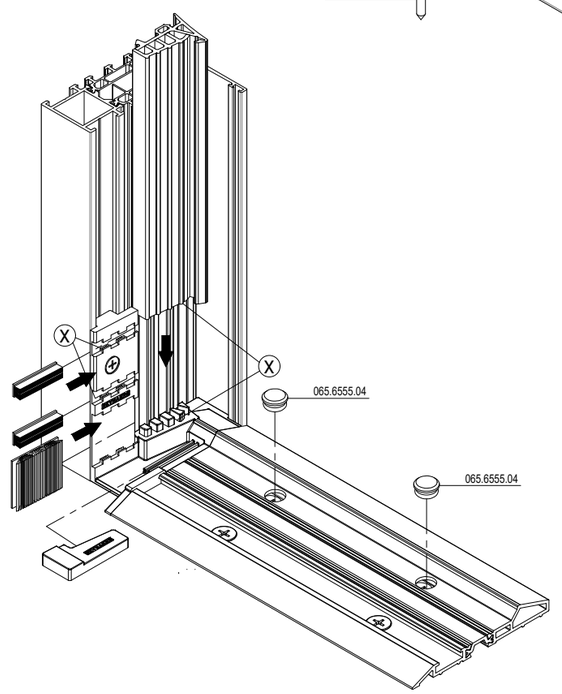

1

ASSEMBLY END PIECE LANDSCAPE PIVOT DOOR

INSTALLATION 169.7535.04 FRAME

MASTERLINE 8-Fu

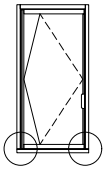

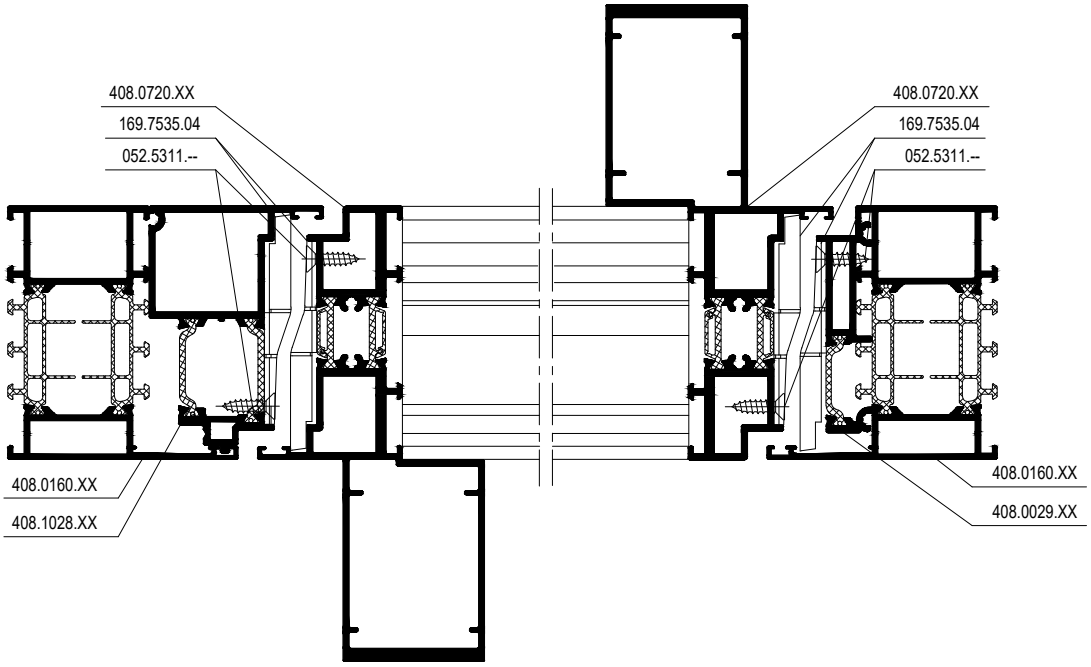

ASSEMBLY END PIECE LANDSCAPE PIVOT DOOR

INSTALLATION 169.7535.04 FRAME

MASTERLINE 8-Fu

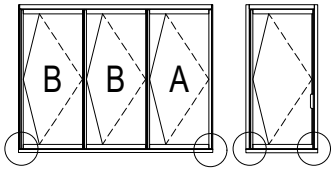

FRONT LEFT

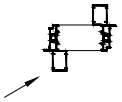

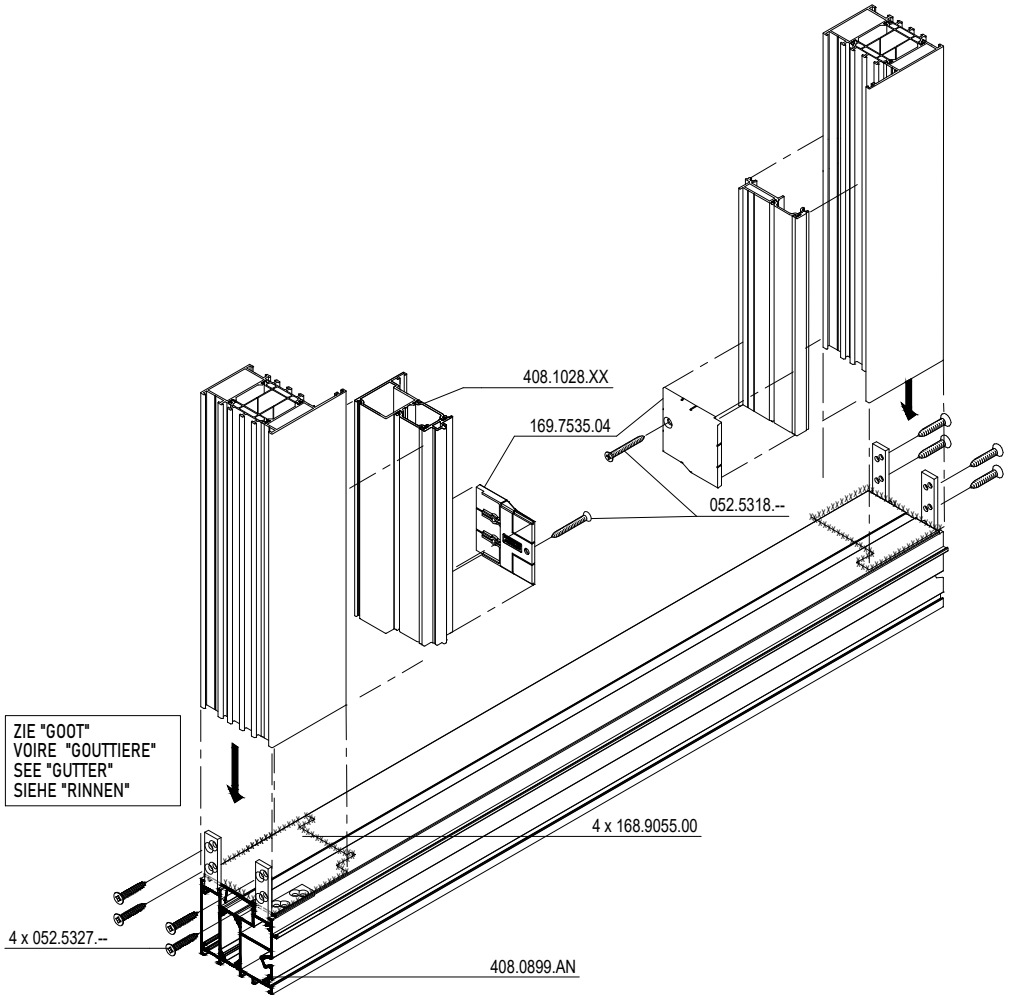

X DICHTINGSMIDDEL
MATIERE D'ETANCHEITE
SEALING AGENT
ABDICHTUNG

ASSEMBLY END PIECE MAGNETUDE PANEL DOOR

END PIECES Z-T MAGNETUDE PANEL DOOR

MASTERLINE 8-Fu

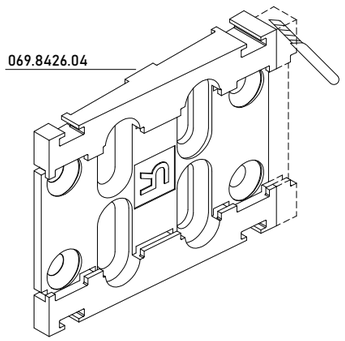

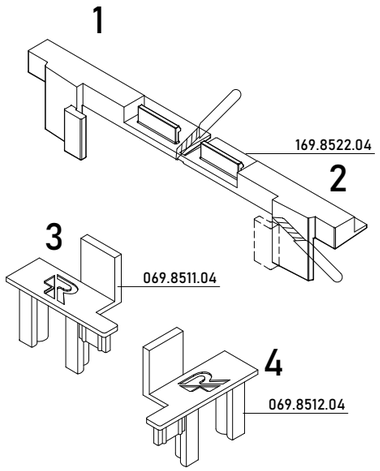

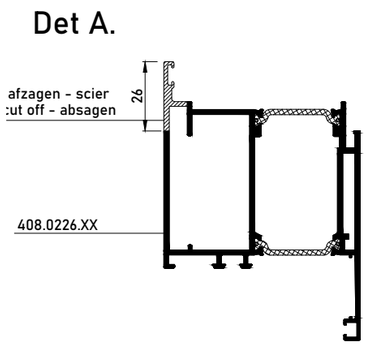

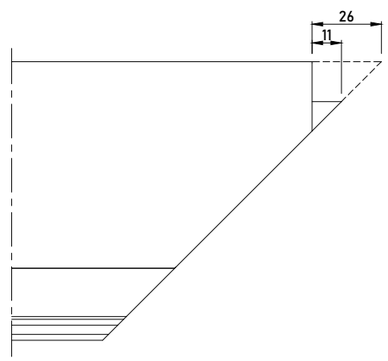

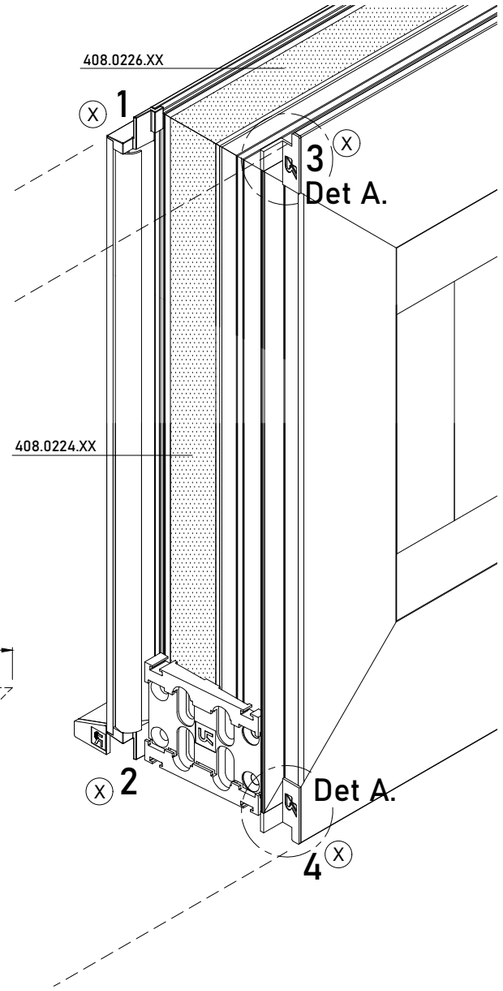

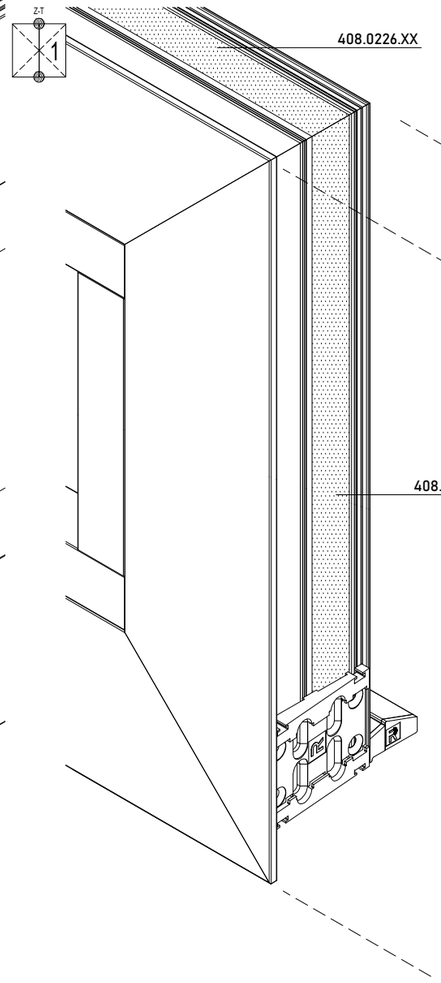

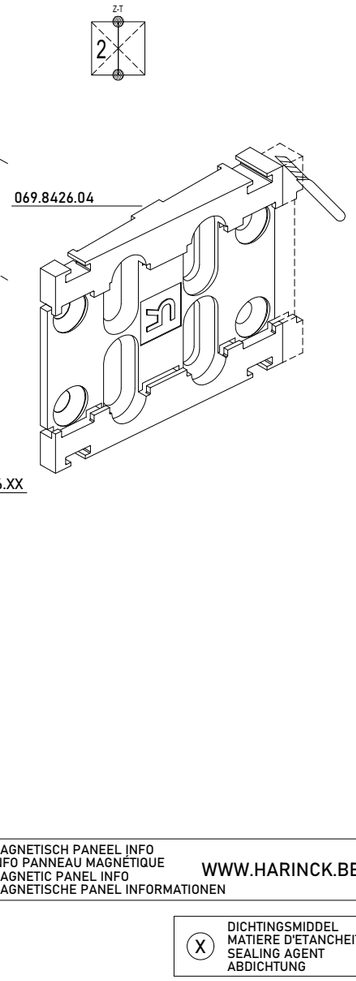

MAGNETISCH PANEEL INFO
INFO PANNEAU MAGNÉTIQUE
MAGNETIC PANEL INFO
MAGNETISCHE PANEL INFORMATIONEN
WWW.HARINCK.BE

X DICHTINGSMIDDEL
MATIERE D'ETANCHEITE
SEALING AGENT
ABDICHTUNG

ASSEMBLY END PIECE MAGNETUDE PANEL DOOR

END PIECES Z-T MAGNETUDE PANEL DOOR

MASTERLINE 8-Fu

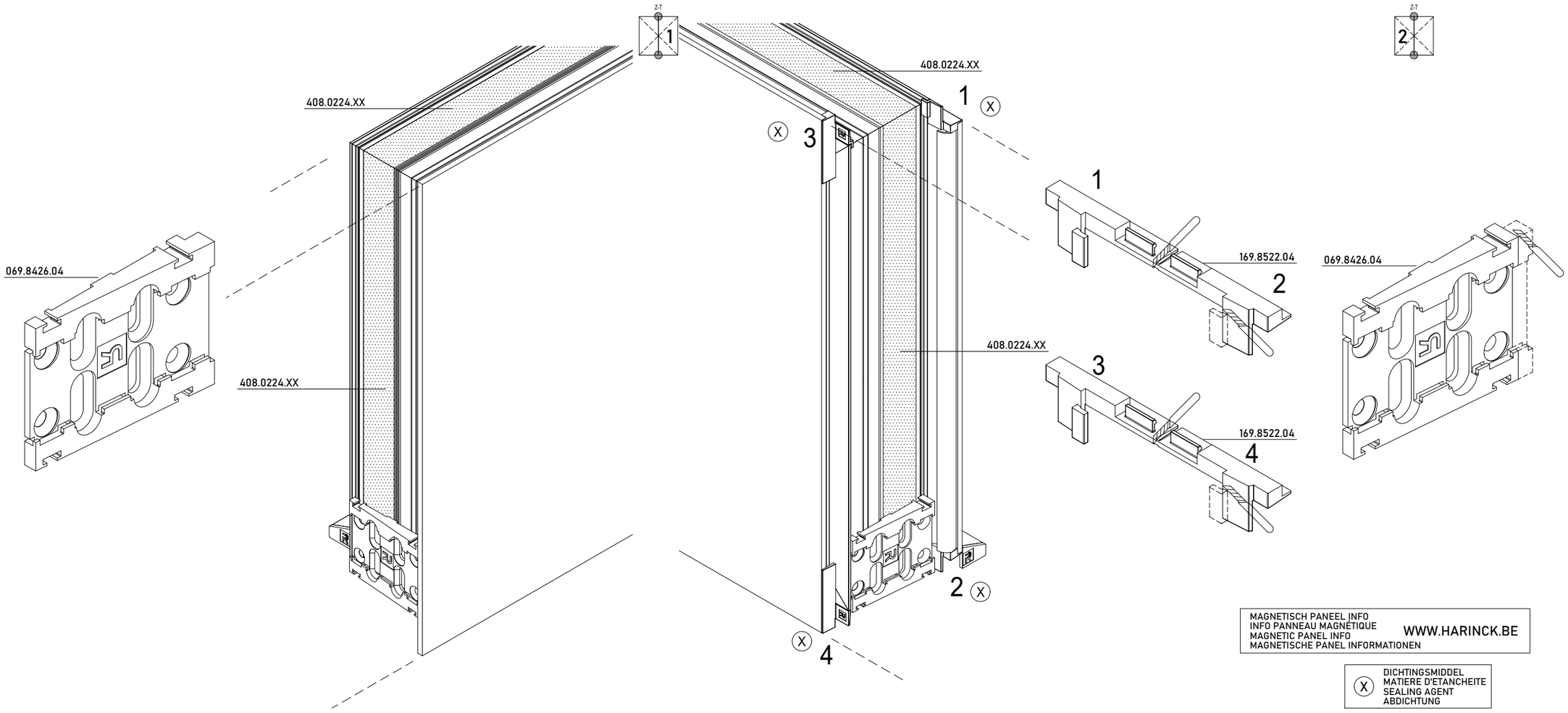

MAGNETISCH PANEEL INFO
INFO PANNEAU MAGNÉTIQUE
MAGNETIC PANEL INFO
MAGNETISCHE PANEL INFORMATIONEN
WWW.HARINCK.BE

X DICHTINGSMIDDEL
MATIERE D'ETANCHEITE
SEALING AGENT
ABDICHTUNG

ASSEMBLY GLASS BALUSTRADE

ASSEMBLY BALUSTRADE

MASTERLINE 8-Fu

1

	095.C300.00 or 095.E000.00 or 095.E010.00
	095.B300.00

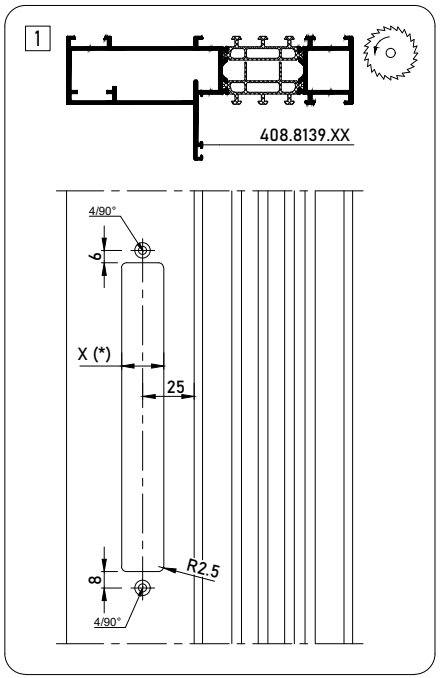

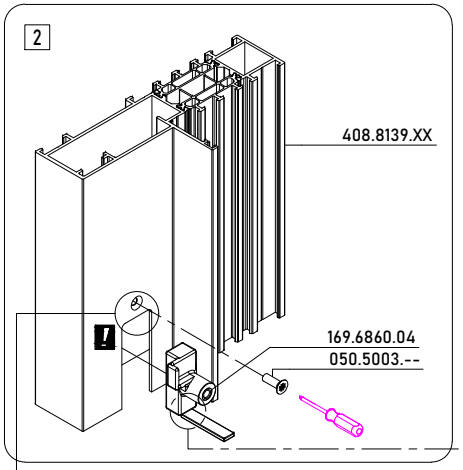

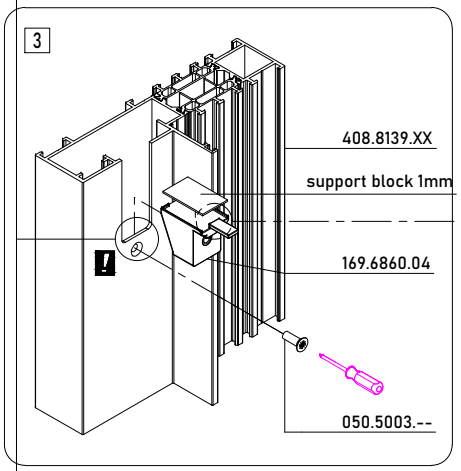

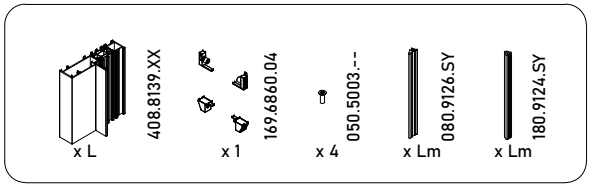

408.8139.XX	508.8139.XX
408.8155.XX	508.8155.XX
408.3109.XX	508.3109.XX
408.3110.XX	508.3110.XX
406.0327.XX	

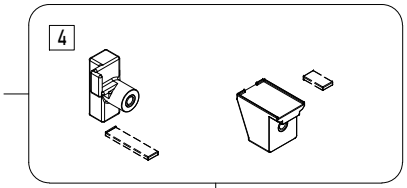

1

(*) X = GLASDIKTE + 8MM
(*) X = EPAISSEUR DE VITRAGE + 8MM
(*) X = GLAZING THICKNESS + 8MM
(*) X = GLASDICKE + 8MM

ONTBRAMEN
MARQUER LES DECOUPES
MARKING OF RECESSES
DIE AUSSPARUNGEN MARKIEREN

ASSEMBLY GLASS BALUSTRADE

ASSEMBLY BALUSTRADE

MASTERLINE 8-Fu

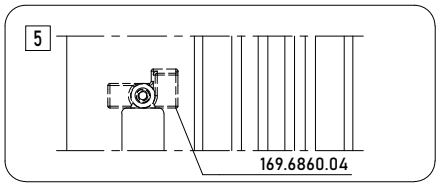

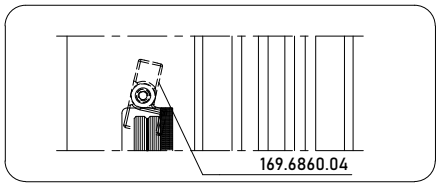

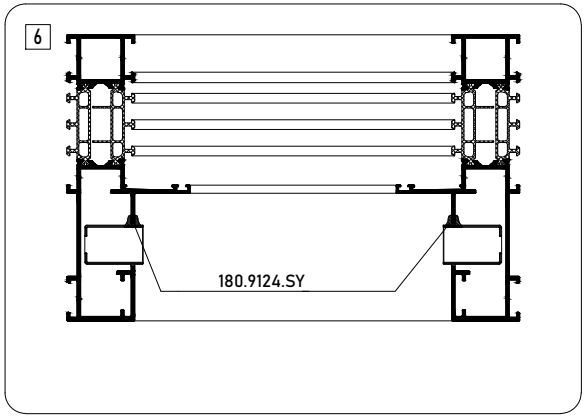

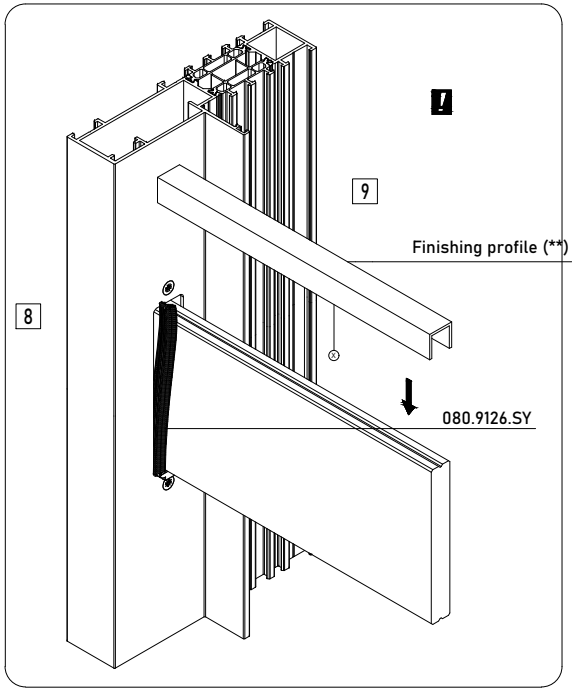

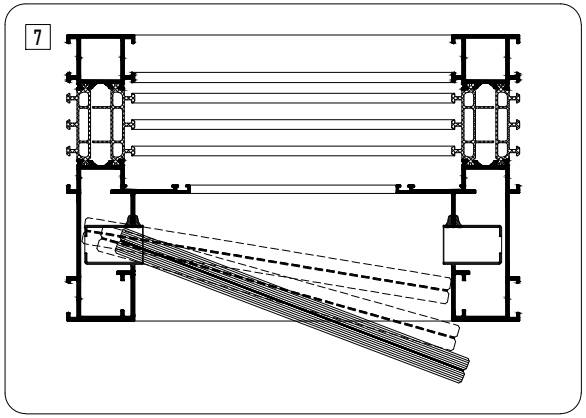

!	AFWERKING BESCHERMT GELAAGD GLAS PROFILE DE FINITION PROTEGE LA VERRE FEUILLETE FINIDHING PROFILE PROTECTS LAMINATED GLASS ABSCHLUSSPROFIL SHUTST VERBUND-SICHERHEIDSGLASS

MONTAGEVOLGORDE
L'ORDRE DE MONTAGE
THE ORDER OF ASSEMBLY
MONTAGEREIHENFOLGE

1 2 3 .

BIJKOMENDE INFO VOORBEREIDING/VERWERKING -> RAADPLEEG HOOFDSTUK B !
INFO COMPLEMENTAIRE PREPARATION/USINAGE -> CONSULTEZ CHAPITRE B !
ADDITIONAL INFO PREPARATION/PROCESSING -> CONSULT CHAPTER B !
ZUSAETZLICHE INFO VORBEREITUNG/VERARBEITUNG -> SIEHE KAPITEL B !

ASSEMBLY GLASS BALUSTRADE

ASSEMBLY BALUSTRADE

MASTERLINE 8-Fu

1

	095.C300.00 or 095.E000.00 or 095.E010.00
	095.B300.00

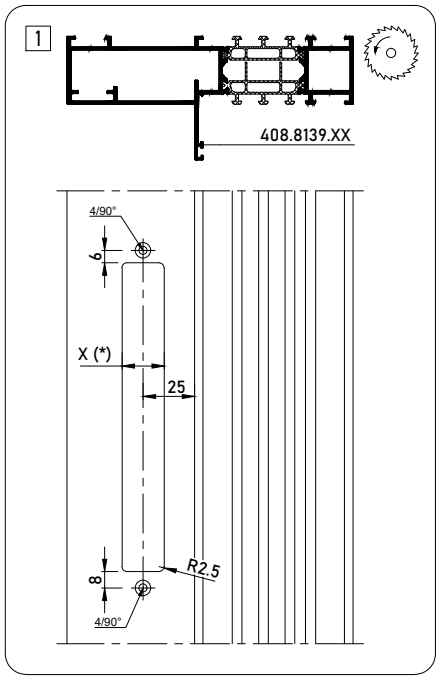

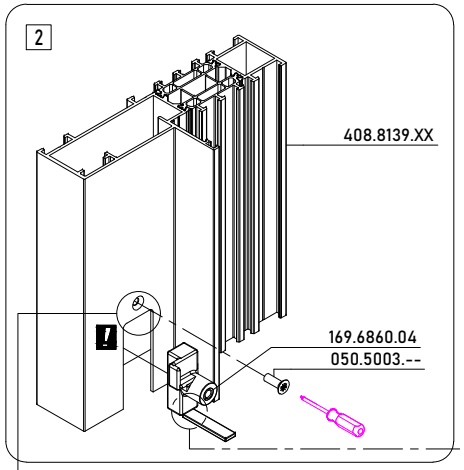

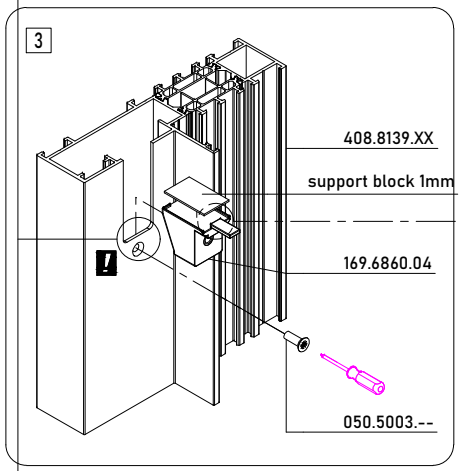

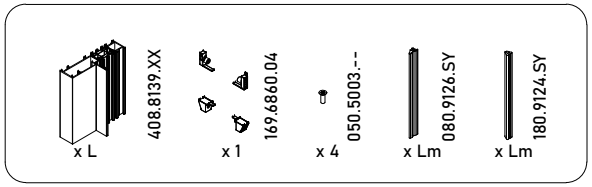

408.8139.XX	508.8139.XX
408.8155.XX	508.8155.XX
408.3109.XX	508.3109.XX
408.3110.XX	508.3110.XX
406.0327.XX	

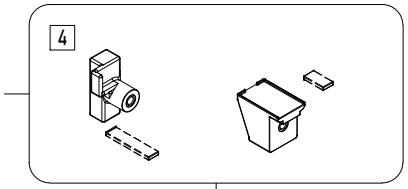

1

(*) X = GLASDIKTE + 8MM
(*) X = EPAISSEUR DE VITRAGE + 8MM
(*) X = GLAZING THICKNESS + 8MM
(*) X = GLASDICKE + 8MM

ONTBRAMEN
MARQUER LES DECOUPES
MARKING OF RECESSES
DIE AUSSPARUNGEN MARKIEREN

ASSEMBLY GLASS BALUSTRADE

ASSEMBLY BALUSTRADE

MASTERLINE 8-Fu

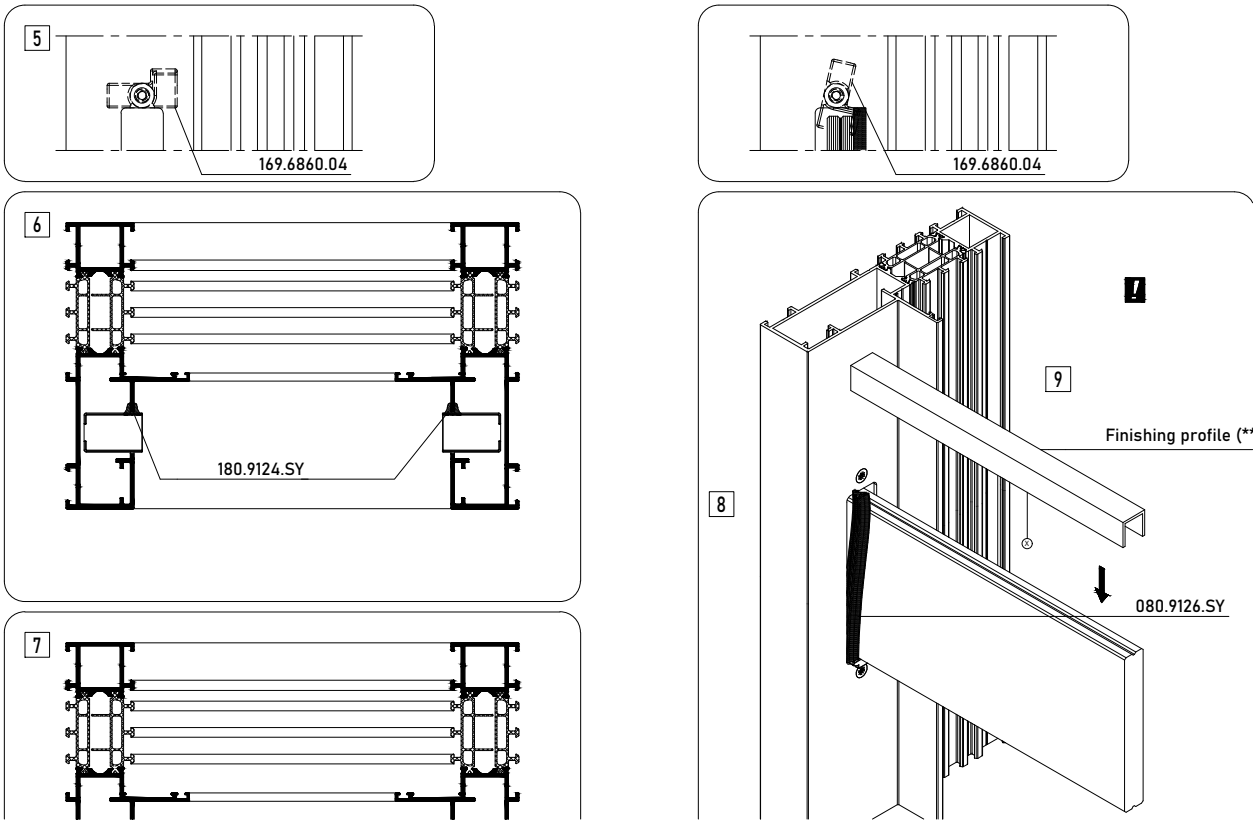

AFWERKING BESCHERMT GELAAGD GLAS
PROFILE DE FINITION PROTEGE LA VERRE FEUILLETE
FINIDHING PROFILE PROTECTS LAMINATED GLASS
ABSCHLUSSPROFIL SHUTST VERBUND-SICHERHEIDSGLASS

MONTAGEVOLGORDE
L 'ORDRE DE MONTAGE
THE ORDER OF ASSEMBLY
MONTAGEREIHENFOLGE
1 2 3 .

BIJKOMENDE INFO VOORBEREIDING/VERWERKING -> RAADPLEEG HOOFDSTUK B !
INFO COMPLEMENTAIRE PREPARATION/USINAGE -> CONSULTEZ CHAPITRE B !
ADDITIONAL INFO PREPARATION/PROCESSING -> CONSULT CHAPTER B !
ZUSAETZLICHE INFO VORBEREITUNG/VERARBEITUNG -> SIEHE KAPITEL B !

ASSEMBLY HINGE DR HAHN VL BAND AT

VL-BAND - ASSEMBLY HINGES

CS 77, MASTERLINE 8-Fu, SlimLine 38

VERANKERING VAST LICHT
ANCRAGE SOUFLET FIXE
ANCHORING FIXED LIGHT
VERANKERUNG FESTEM SEITENTEIL



2 EXTRA SCHROEVEN BOVEN EN ONDER ELK SCHARNIER VOOR STABILITEIT
2 EXTRA VIS AU DESSUS ET SOUS CHAQUE CHARNIERE POUR LA STABILITE
2 EXTRA SCREWS ABOVE AND UNDER EACH HINGE FOR STABILITY
2 EXTRA SCHRAUBEN OBEN UND UNTER JEDER SCHARNIER FUR STABILITAT

INSTALLATIE PLAN => DOCU PORTAL HARDWARE PLANS
INSTRUCTION D'INSTALLATION => DOCU PORTAL HARDWARE PLANS
HARDWARE INSTALLATION PLAN => DOCU PORTAL HARDWARE PLANS
INSTALLATIONSANWEISUGEN => DOCU PORTAL HARDWARE PLANS

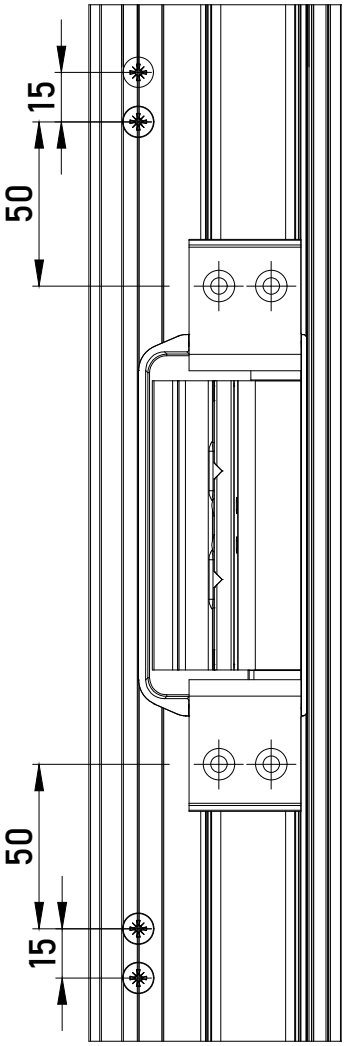

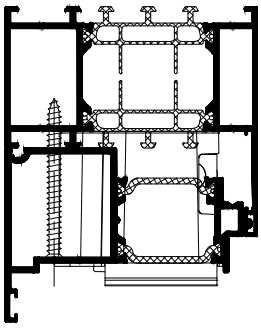

DECOMPRESSIE VLEUGEL
DECOMPRESSION OUVRANT
DECOMPRESSION VENT
DEKOMPRESSION FLEUGEL



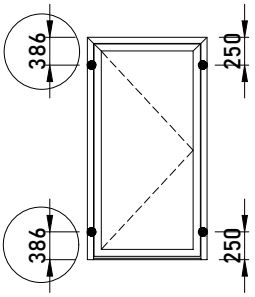

ASSEMBLY HINGE DR HAHN VL BAND AT

VL-BAND - ASSEMBLY HINGES

CS 77, MASTERLINE 8-Fu, SlimLine 38

INBOUW IN DE RUWBOUW
MONTAGE DANS LE GROS OEUVRE
FITTING IN THE STRUCTURAL WORK
BEFESTIGUNG AM BAUKORPER

Afstand bevestigingsankers aanpassen in functie van het klemanker van verborgen scharnier
Ajustez la distance des ancrages de fixation en fonction de l'ancrage de la charnière dissimulée
Adjust the distance of the fastening anchors according to the clamping anchor of the concealed hinge
Stellen Sie den abstand der Befestigungsanker entsprechend dem Klemmanker des verdeckten Scharniers ein

INSTALLATIE PLAN => DOCU PORTAL HARDWARE PLANS
INSTRUCTION D'INSTALLATION => DOCU PORTAL HARDWARE PLANS
HARDWARE INSTALLATION PLAN => DOCU PORTAL HARDWARE PLANS
INSTALLATIONSANWEISUGEN => DOCU PORTAL HARDWARE PLANS

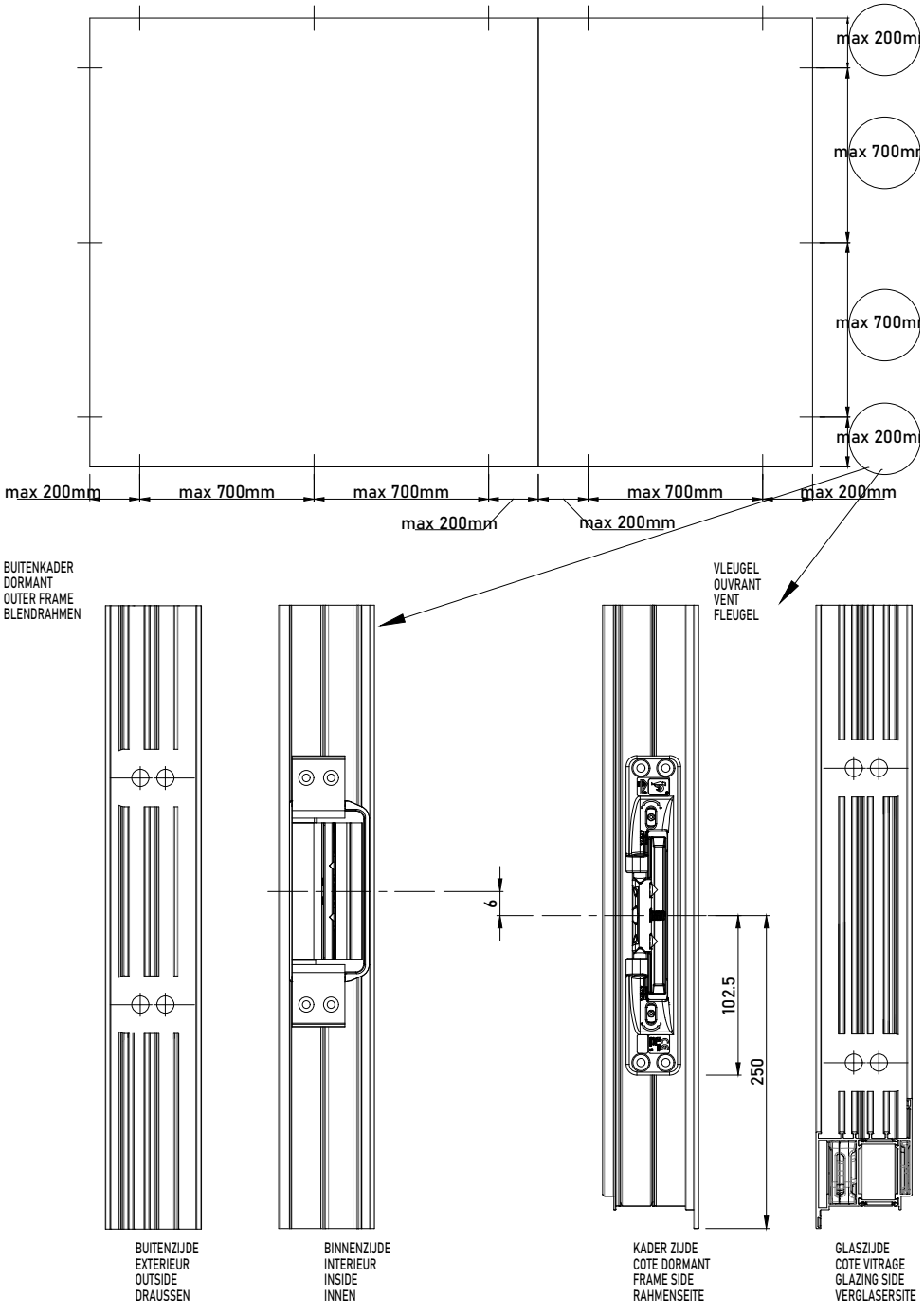

ASSEMBLY HINGE DR HAHN VL BAND AT

VL-BAND - ASSEMBLY HINGES

CS 77, MASTERLINE 8-Fu, SlimLine 38

BEGLAZING
VITRAGE
GLAZING
VERGLASUNG

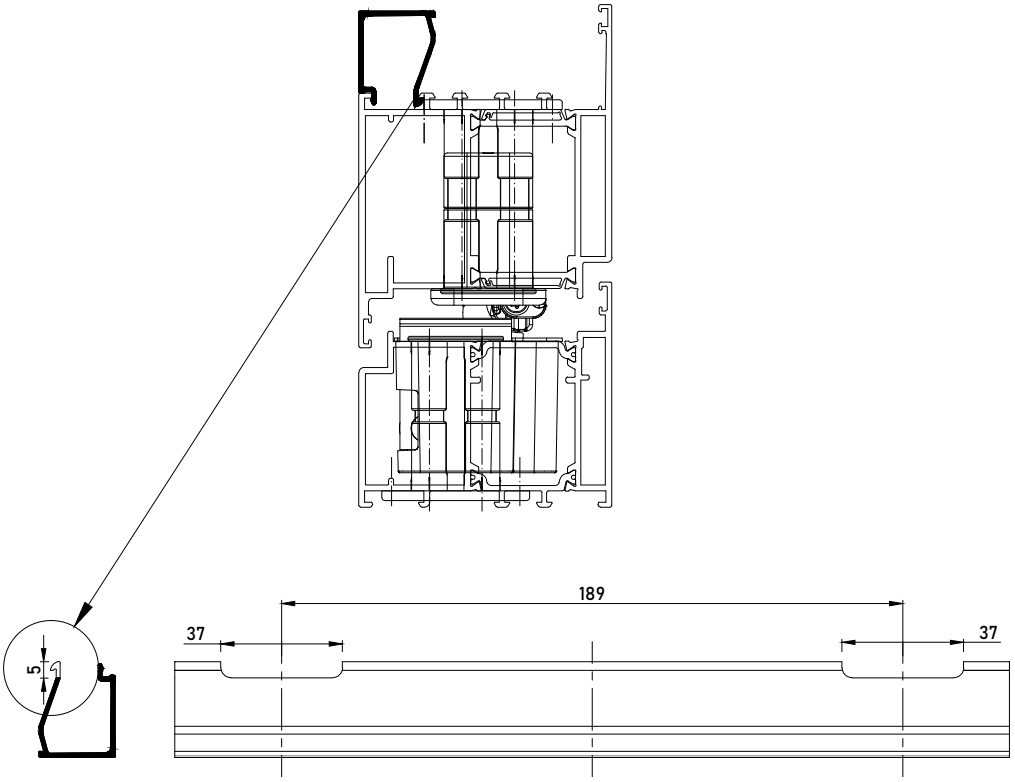

OPTIONEEL
OPTION
OPTIONAL
OPTIONAL

095.C500.00 095.C600.00
197.G400.00

INSTALLATIE PLAN => DOCU PORTAL HARDWARE PLANS
INSTRUCTION D'INSTALLATION => DOCU PORTAL HARDWARE PLANS
HARDWARE INSTALLATION PLAN => DOCU PORTAL HARDWARE PLANS
INSTALLATIONSANWEISUGEN => DOCU PORTAL HARDWARE PLANS

ASSEMBLY HINGE DR HAHN VL BAND AT

VL-BAND - ASSEMBLY HINGES

CS 77, MASTERLINE 8-Fu, SlimLine 38

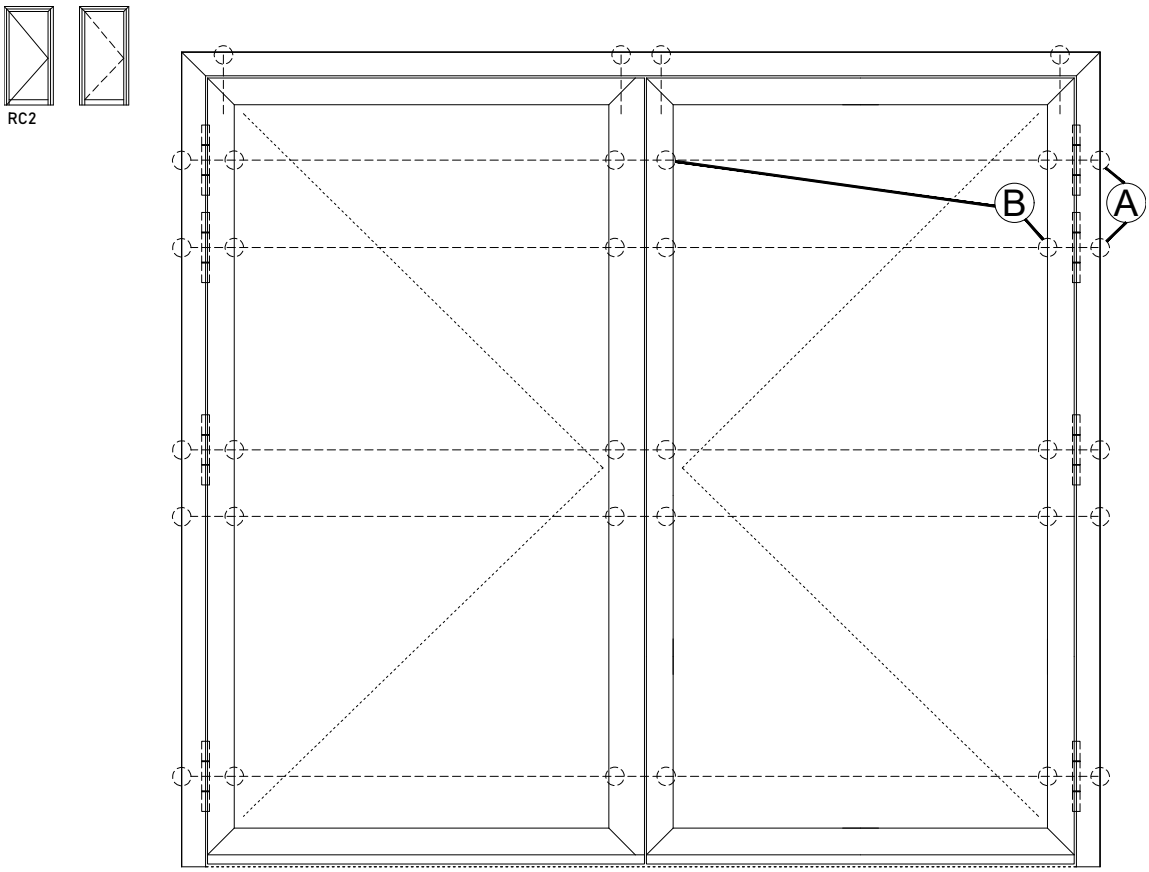

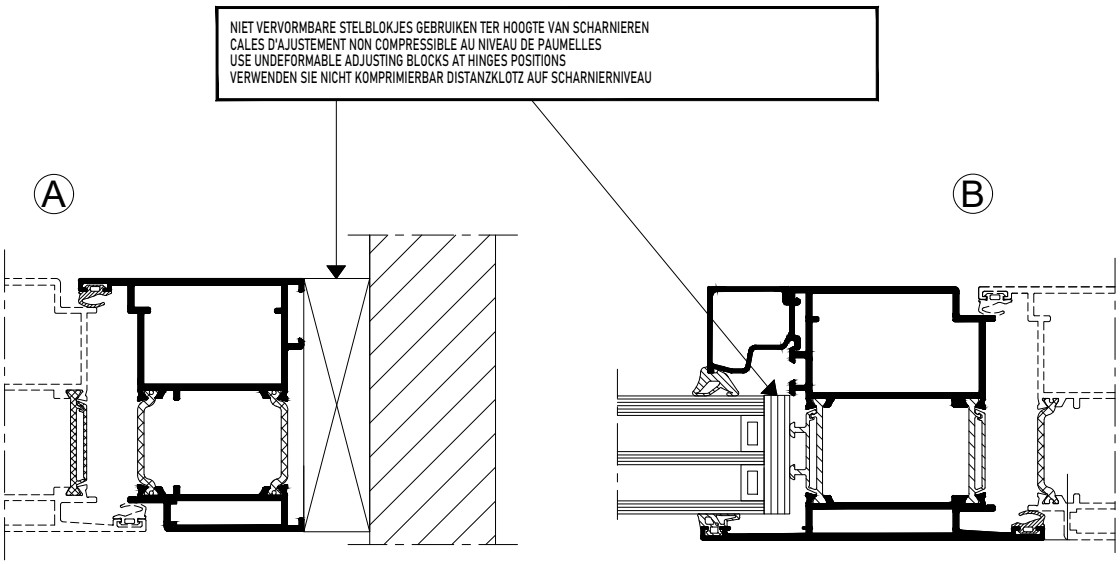

INSTALLATIE PLAN => DOCU PORTAL HARDWARE PLANS
INSTRUCTION D'INSTALLATION => DOCU PORTAL HARDWARE PLANS
HARDWARE INSTALLATION PLAN => DOCU PORTAL HARDWARE PLANS
INSTALLATIONSANWEISUGEN => DOCU PORTAL HARDWARE PLANS

Hardware Info
Beslaginformatie
Informations de quincaillerie
Beschlag-informationen

Reynaers Aluminium

ASSEMBLY HINGE ROLLENBAND

ROLLENBAND - ASSEMBLY HINGES

CS 59, CS 59PA, CS 77, CS 77-AP, CS 77-BP, CS 77-FP, ES 50, MASTERLINE 10-Fu, MASTERLINE 8-Fu, OPENING DOORS, SlimLine 38

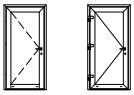

VERANKERING VAST LICHT
ANCRAGE SOUFLET FIXE
ANCHORING FIXED LIGHT
VERANKERUNG FESTEM SEITENTEIL

2 SCHROEVEN BOVEN EN ONDER ELK SCHARNIER VOOR STABILITEIT
2 VIS AU DESSUS ET SOUS CHAQUE CHARNIERE POUR LA STABILITE
2 SCREWS ABOVE AND UNDER EACH HINGE FOR STABILITY
2 SCHRAUBEN OBEN UND UNTER JEDER SCHARNIER FUR STABILITAT

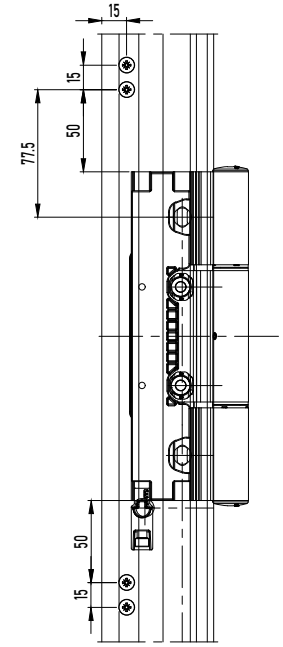

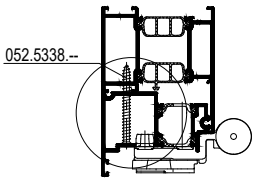

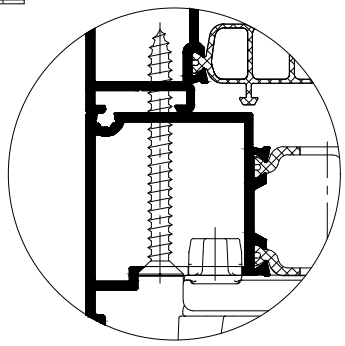

Production Steps
Productiestappen
Étapes de production
Verarbeitungs-Zeichnungen

Reynaers Aluminium

ASSEMBLY LOWERING PROFILE BALCONY DOOR 2024

LOWERING PROFILE MONTAGE + END PIECES

MASTERLINE 8-Fu

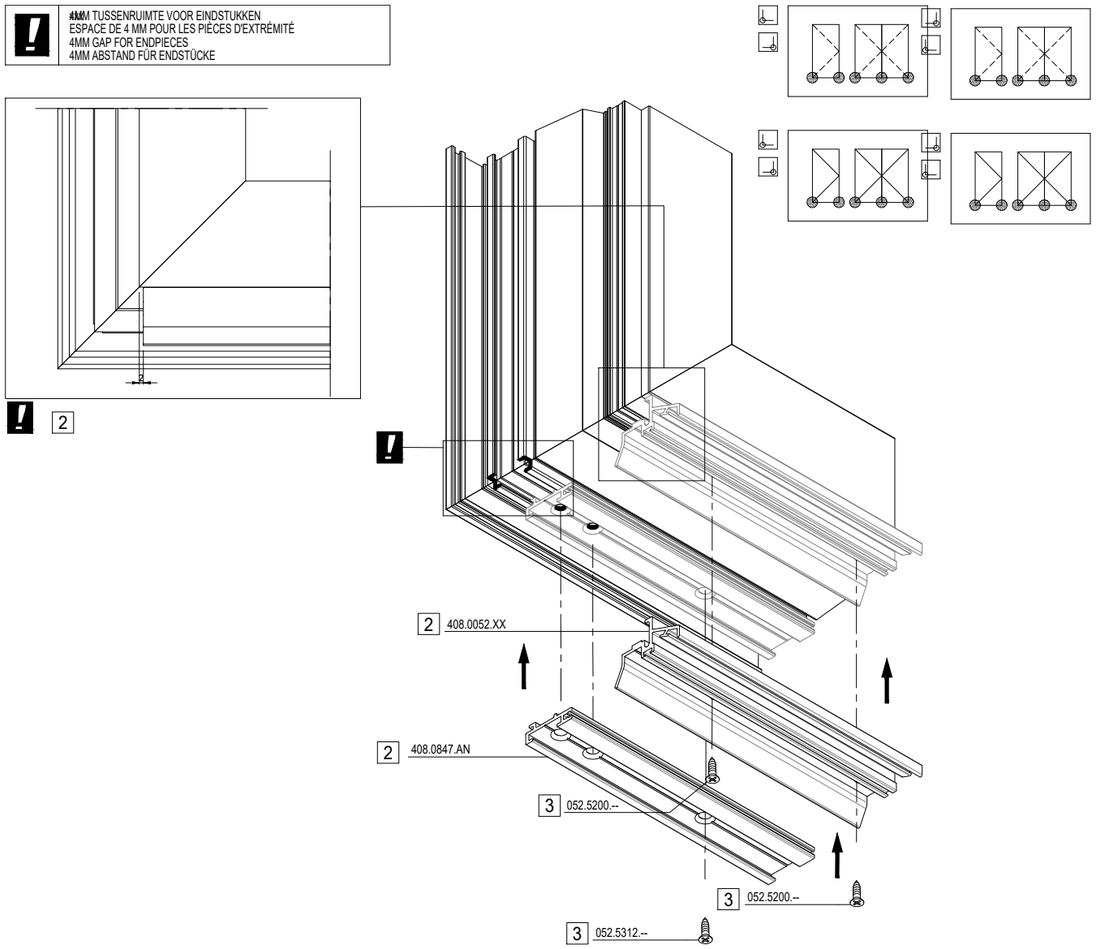

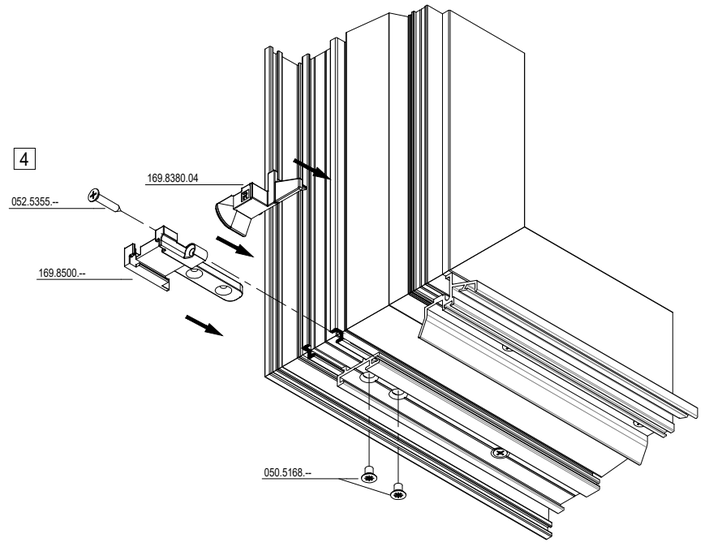

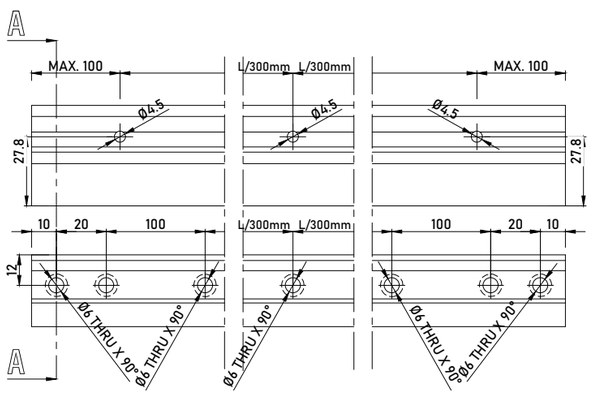

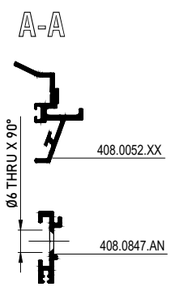

MONTAGEVOLGORDE
L'ORDRE DE MONTAGE
THE ORDER OF ASSEMBLY
MONTAGEREIHENFOLGE
1 2 3 .

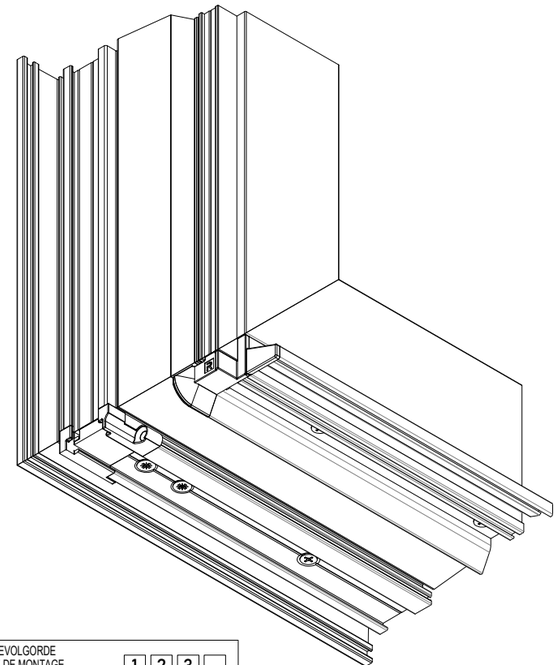

MONTAGEVOLGORDE
L'ORDRE DE MONTAGE
THE ORDER OF ASSEMBLY
MONTAGEREIHENFOLGE
1 2 3 .

ASSEMBLY LOWERING PROFILE BALCONY DOOR 2024

LOWERING PROFILE MONTAGE + END PIECES - HIDDEN VENT

MASTERLINE 8-Fu

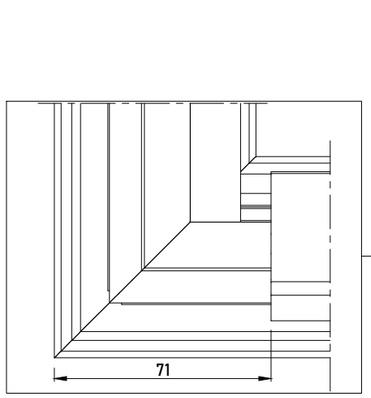

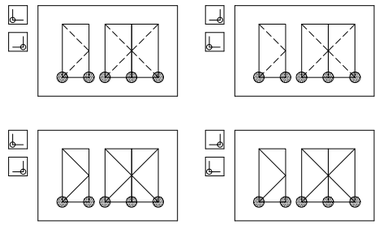

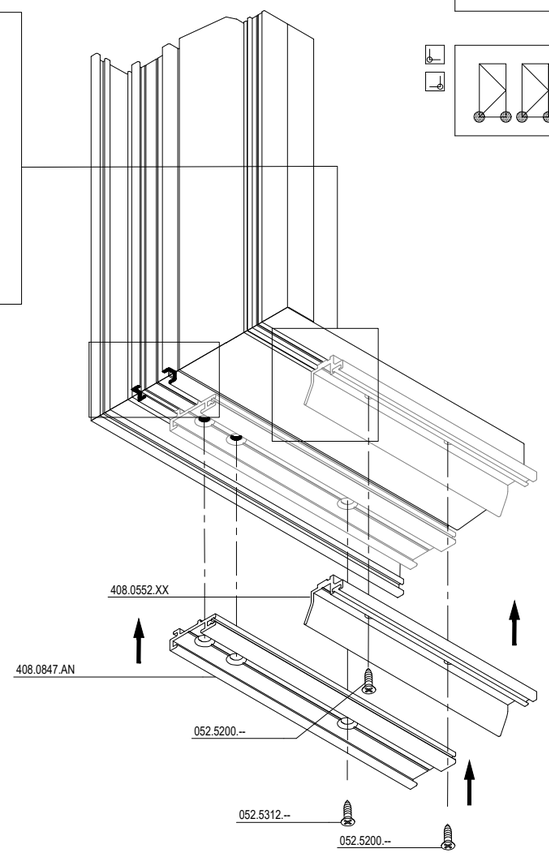

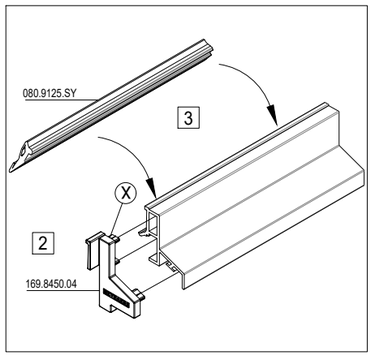

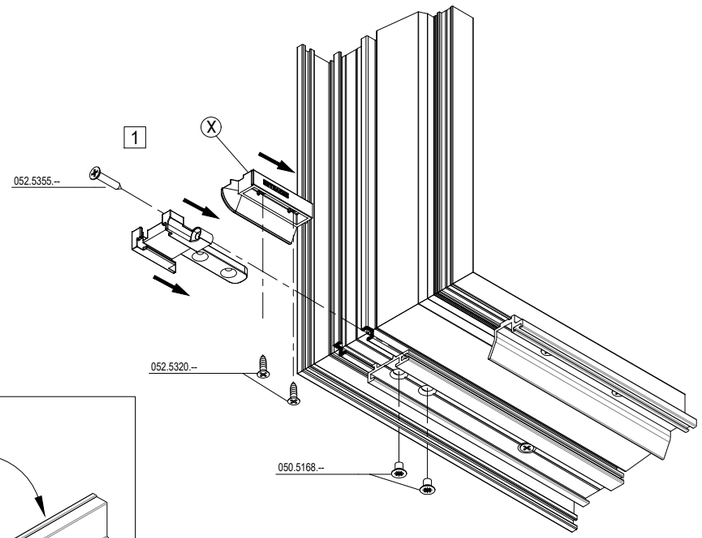

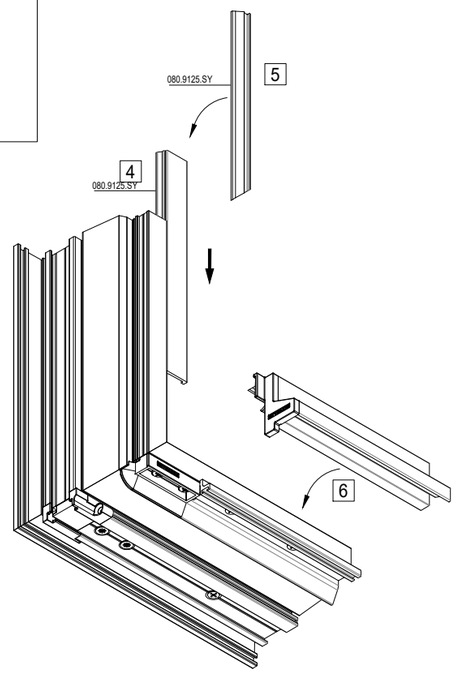

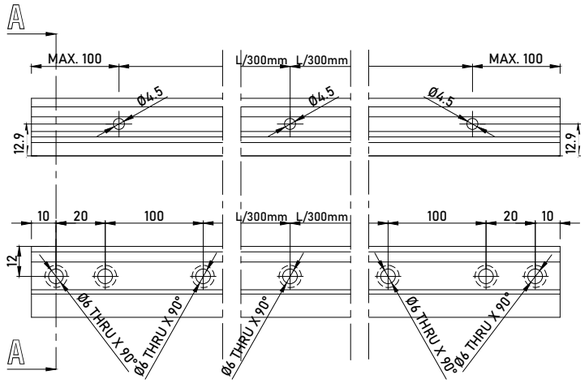

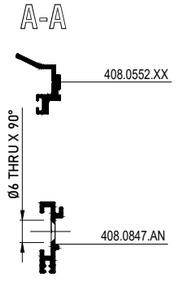

MONTAGEVOLGORDE
L'ORDRE DE MONTAGE
THE ORDER OF ASSEMBLY
MONTAGEREIHENFOLGE
1 2 3 .

MONTAGEVOLGORDE
L'ORDRE DE MONTAGE
THE ORDER OF ASSEMBLY
MONTAGEREIHENFOLGE
1 2 3 .

X DICHTINGSMIDDEL
MATIERE D'ETANCHEITE
SEALING AGENT
ABDICHTUNG

ASSEMBLY PANEL MAGNETUDE PANEL DOOR

ASSEMBLY MAGNETUDE PANEL

MASTERLINE 8-Fu

1

Plaats de tape
Placez la bande
Place the tape
Legen Sie das Band an

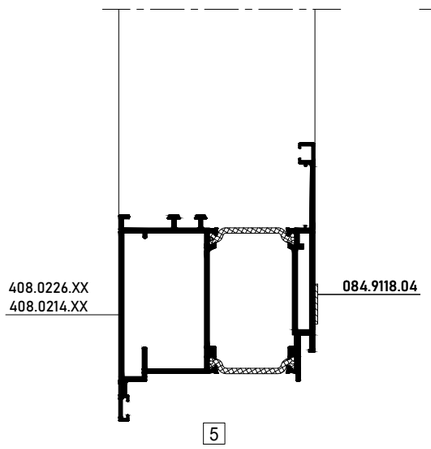

5

Binnenpaneel plaatsing en opspieën
Placement panneau intérieur et des cales
Inner panel placement with spacers
Innenplatte Platzierung und Verkeilen

2

Aanbrengen van een dichting
Mise en place joint
Insert gasket
Montage dichtung

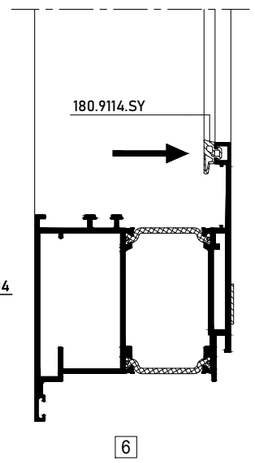

6

Plaats de glaslatten
Placez les parcloses
Place the glazing beads
Platzieren Sie die Glasleisten

3

Dichtingsmiddel
Matiere d'etancheite
Sealing agent
Abdichtung

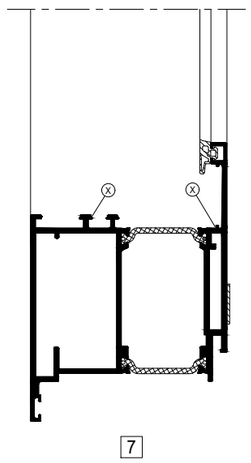

7

Montage dichting
Mise en place joint
Insert gasket
Montage dichtung

4

Aanbrengen glassteun
Mise en place support cale
Insert glazing support
Montage Klotzbrücke

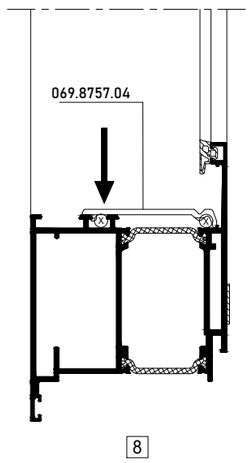

8

Buitenpaneel plaatsing
Placement du panneau extérieur
Outer panel placement
Platzierung der Außenverkleidung

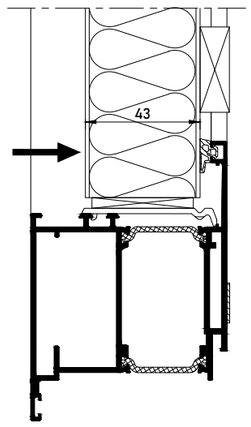

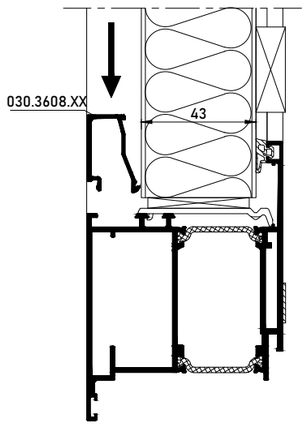

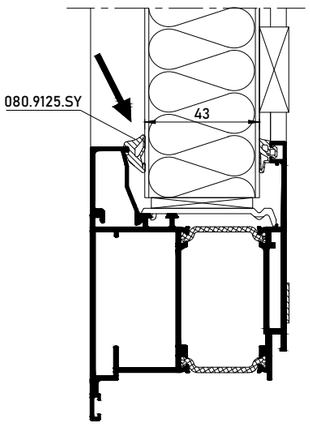

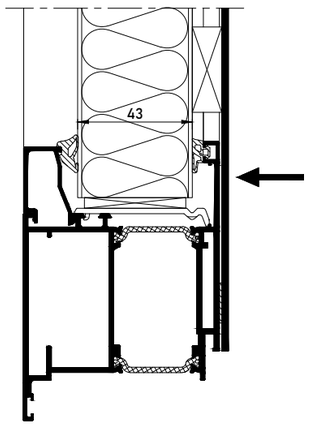

X DICHTINGSMIDDEL
MATIERE D'ETANCHEITE
SEALING AGENT
ABDICHTUNG

MAGNETISCH PANEEL INFO
INFO PANNEAU MAGNÉTIQUE
MAGNETIC PANEL INFO
MAGNETISCHE PANEL INFORMATIONEN
WWW.HARINCK.BE

MONTAGEVOLGORDE
L 'ORDRE DE MONTAGE
THE ORDER OF ASSEMBLY
MONTAGEREIHENFOLGE
1 2 3 .

ASSEMBLY PANEL MAGNETUDE PANEL DOOR

ASSEMBLY MAGNETUDE PANEL

MASTERLINE 8-Fu

1

Plaats de tapes
Placez les bandes
Place the tapes
legen Sie die Bänder ein

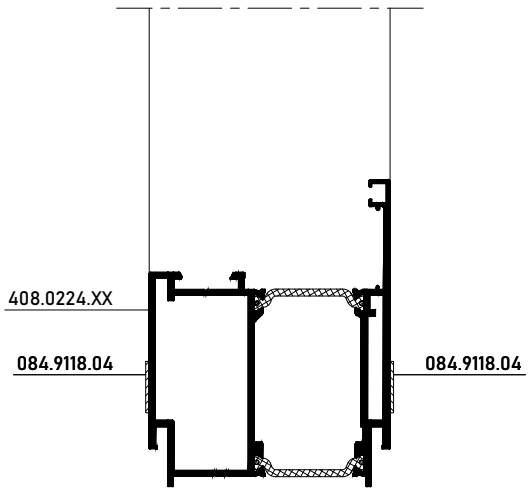

2

Dichtingsmiddel
Matiere d'etancheite
Sealing agent
Abdichtung

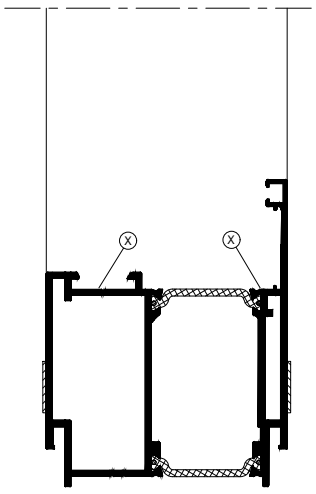

3

Aanbrengen glassteun
Mise en place support cale
Insert glazing support
Montage Klotzbrücke

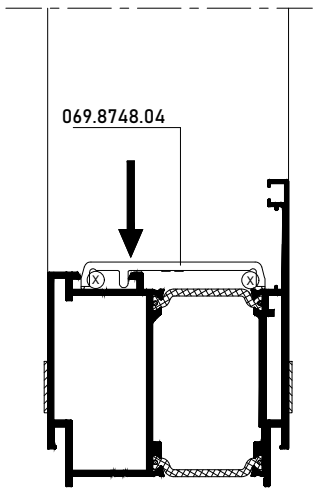

4

Binnenpaneel plaatsing en opspieën
Placement panneau intérieur et des cales
Inner panel placement with spacers
Innenplatte Platzierung und Verkeilen

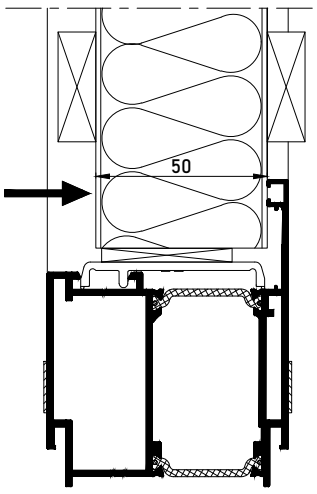

5

Plaats de glaslatten
Placez les parcloses
Place the glazing beads
Platzieren Sie die Glasleisten

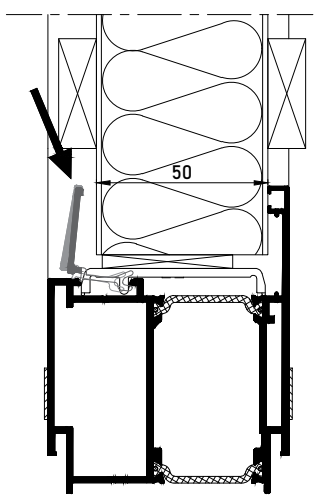

6

Montage dichting
Mise en place joint
Insert gasket
Montage dichtung

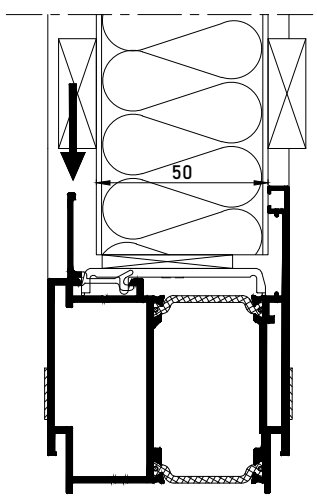

7

Montage dichting
Mise en place joint
Insert gasket
Montage dichtung

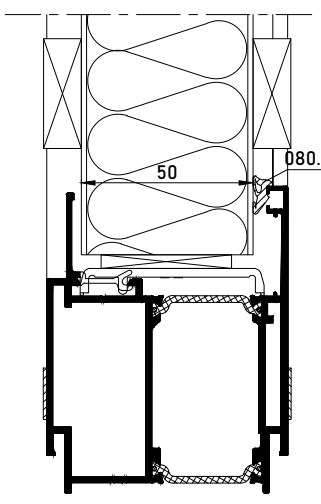

8

Montage dichting
Mise en place joint
Insert gasket
Montage dichtung

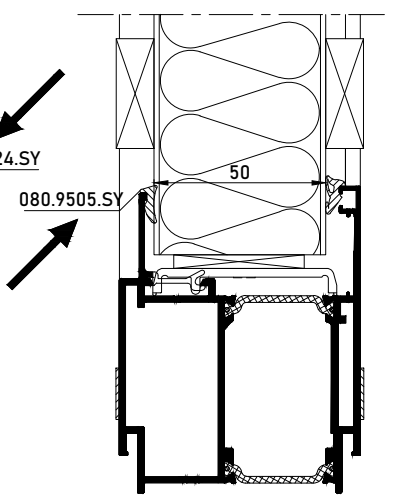

9

Buitenpanelen plaatsing
Placement des panneaux extérieurs
Outer panels placement
Platzierung der Außenplatten

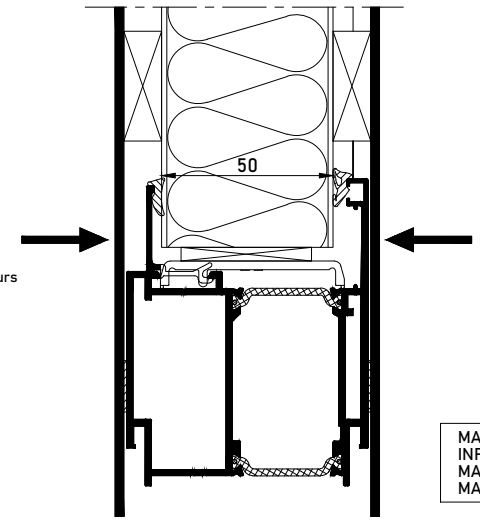

(X) DICHTINGSMIDDEL
MATIERE D'ETANCHEITE
SEALING AGENT
ABDICHTUNG

MAGNETISCH PANEEL INFO
INFO PANNEAU MAGNÉTIQUE
MAGNETIC PANEL INFO
MAGNETISCHE PANEL INFORMATIONEN
WWW.HARINCK.BE

MONTAGEVOLGORDE
L 'ORDRE DE MONTAGE
THE ORDER OF ASSEMBLY
MONTAGEREIHENFOLGE
1 2 3 .

ASSEMBLY PANEL WINDOW-DOOR

ASSEMBLY PANEL

MASTERLINE 8-Fu

1

Aanbrengen van een dichting
Mise en place joint
Insert gasket
Montage dichtung

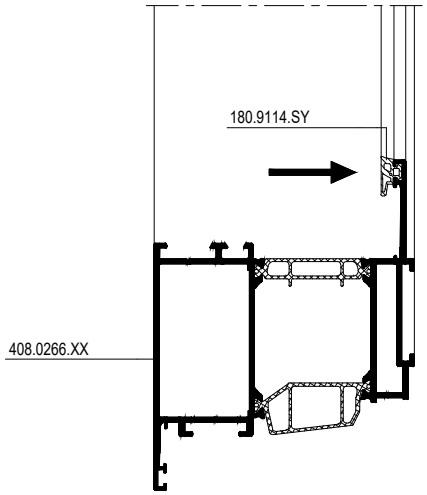

2

Aanbrengen glassteun
Mise en place support cale
Insert glazing support
Montage Klotzbrücke

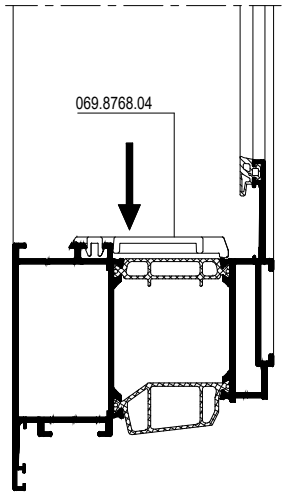

3

Binnenpaneel plaatsing en opspieën
Placement panneau intérieur et des cales
Inner panel placement with spacers
Innenplatte Platzierung und Verkeilen

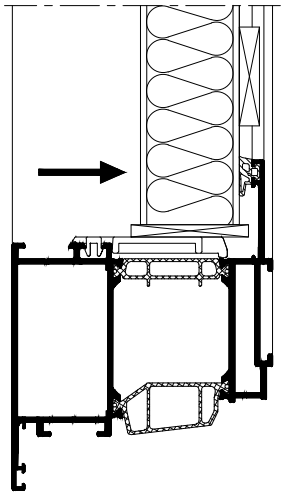

MONTAGEVOLGORDE
L 'ORDRE DE MONTAGE
THE ORDER OF ASSEMBLY
MONTAGEREIHENFOLGE

1 2 3 .

4

Plaats de glaslatten
Placez les parcloses
Place the glazing beads
Platzieren Sie die Glasleisten

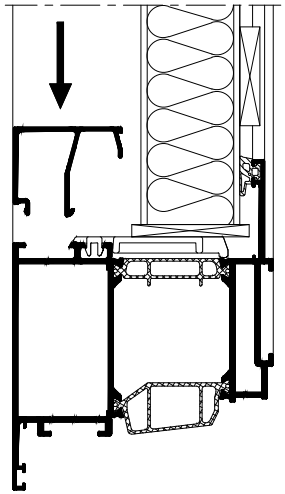

5

Montage dichting
Mise en place joint
Insert gasket
Montage dichtung

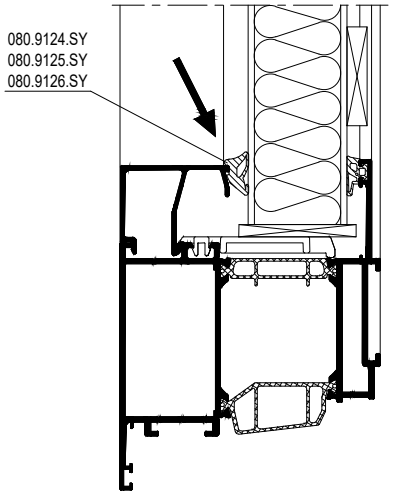

6

Buitenpaneel plaatsing
Placement du panneau extérieur
Outer panel placement
Platzierung der Außenverkleidung

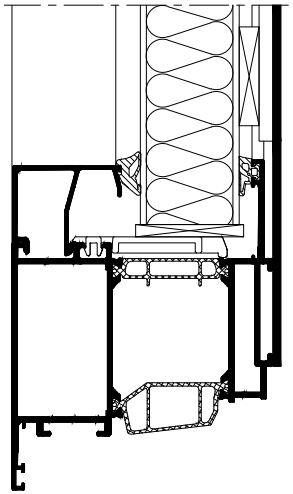

ASSEMBLY SILL BRICKWORK

SYNTHETIC SILL/THRESHOLD - TRADITIONAL BRICKWORK

MASTERLINE 8-Fu

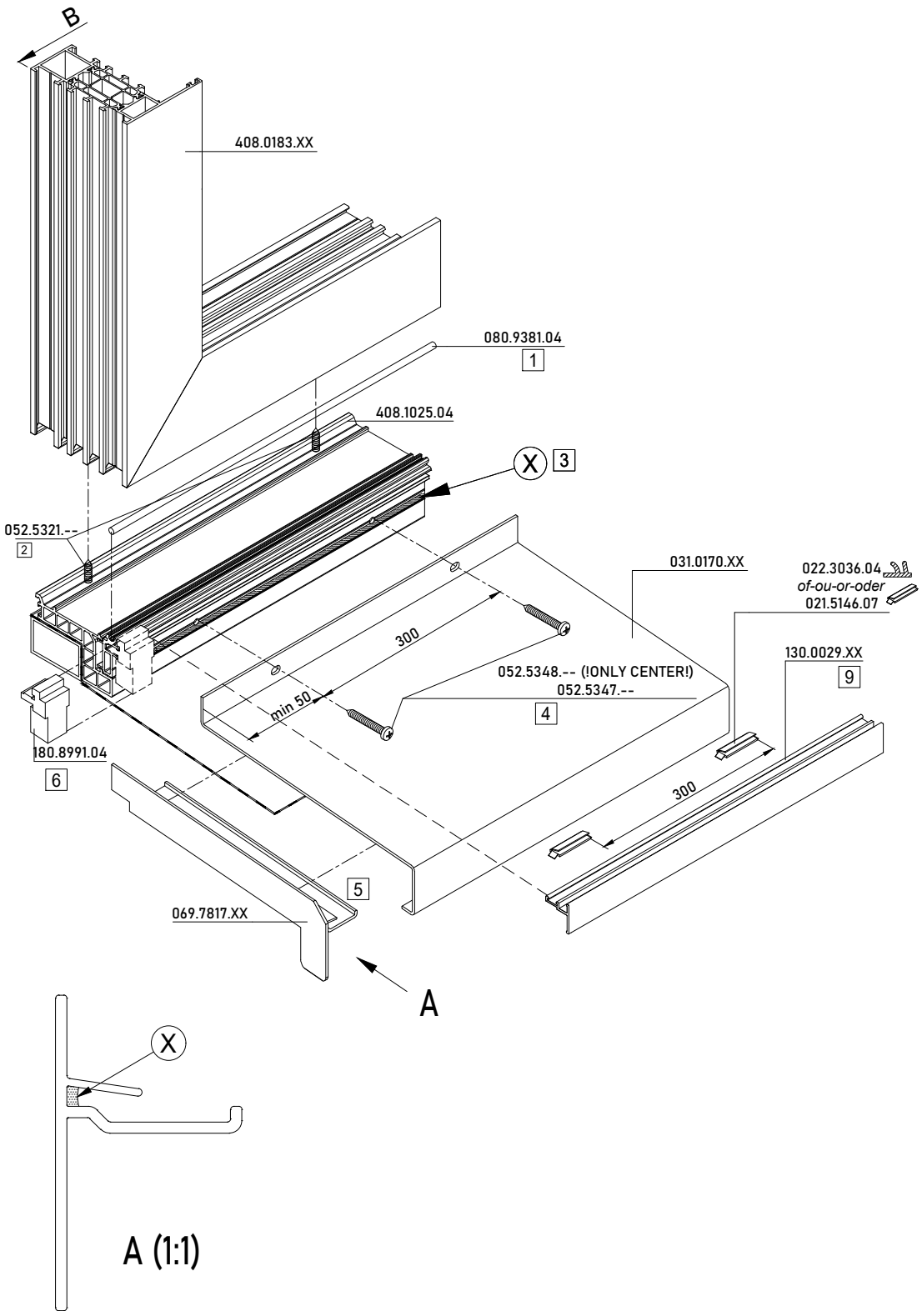

ASSEMBLY SILL BRICKWORK

SYNTHETIC SILL/THRESHOLD - TRADITIONAL BRICKWORK

MASTERLINE 8-Fu

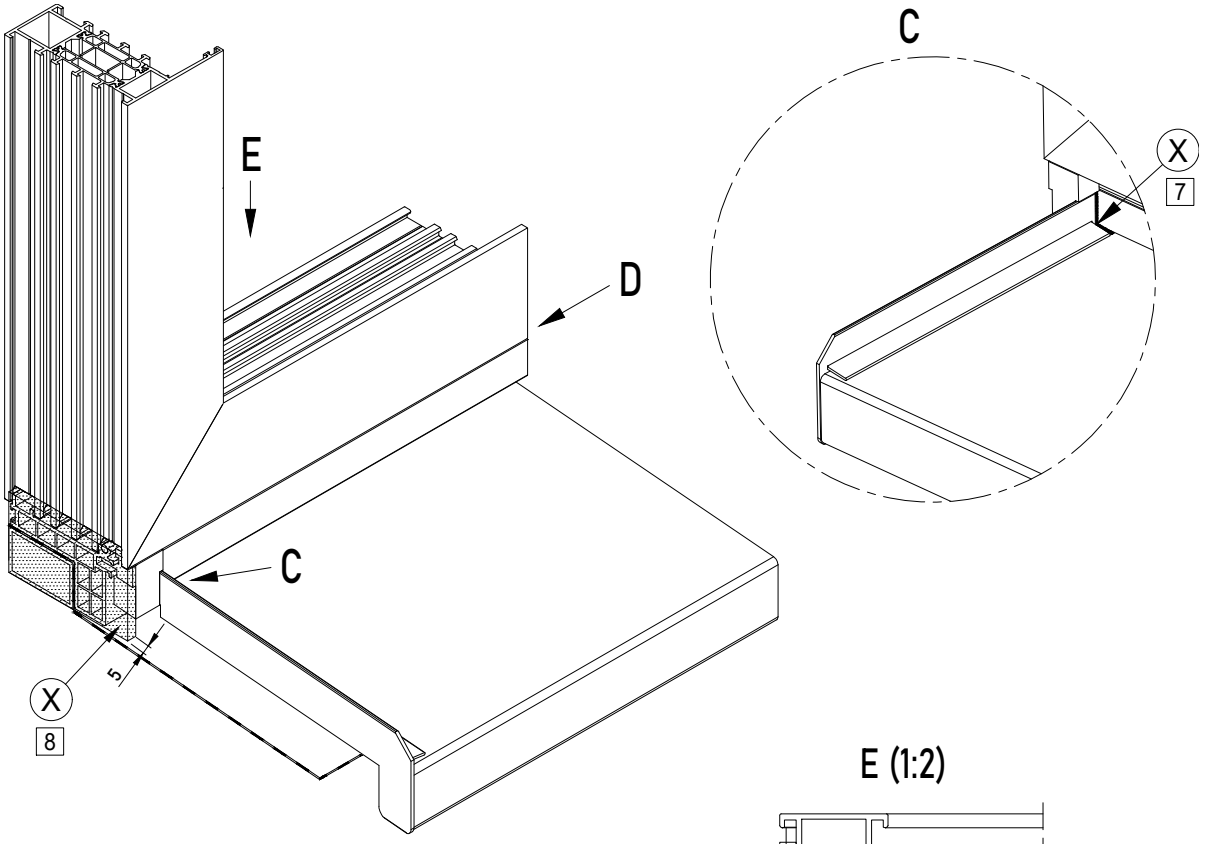

D (1:2)

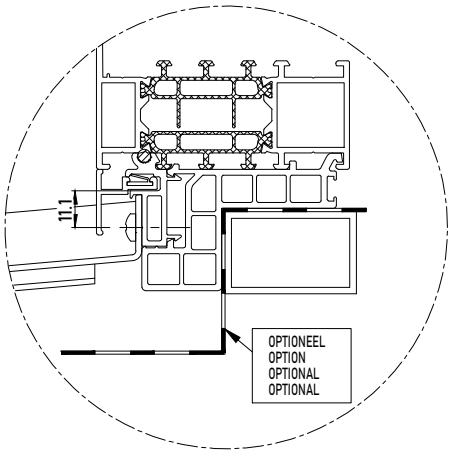

E (1:2)

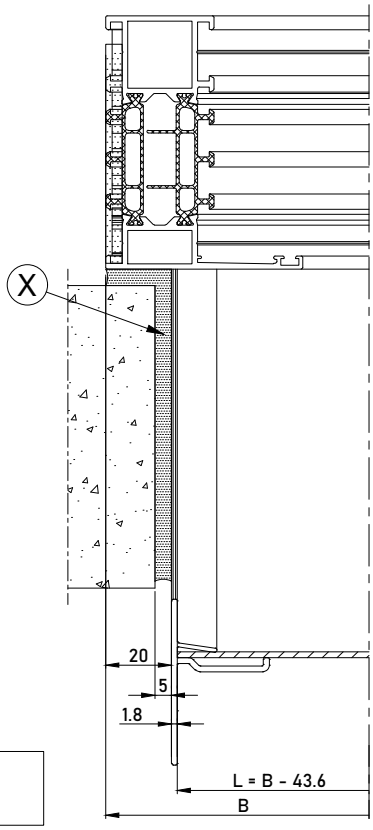

MONTAGEVOLGORDE
L 'ORDRE DE MONTAGE
THE ORDER OF ASSEMBLY
MONTAGEREIHENFOLGE

1 2 3 .

X DICHTINGSMIDDEL
MATIERE D'ETANCHEITE
SEALING AGENT
ABDICHTUNG

ASSEMBLY SILL BRICKWORK

SYNTHETIC SILL/THRESHOLD - TRADITIONAL BRICKWORK

MASTERLINE 8-Fu

			#	Lm
408.1025.04			1	B
408.1023.04			1	B
031.0170.XX			1	B - 43.6
130.0029.XX			1	B - 43.6

DORPEL BAVETTE SILL FENSTERBANK	EINDSTUK DORPEL PIECE D'EXTREMITE SEUIL END PIECE SILL ENDSTUECKWETTERSCHENKEL
031.1050.XX	069.7805.XX
031.0070.XX	069.7807.XX
031.0090.XX	069.7809.XX
031.0110.XX	069.7811.XX
031.0130.XX	069.7813.XX
031.0150.XX	069.7815.XX
031.0170.XX	069.7817.XX
031.0190.XX	069.7819.XX
031.0210.XX	069.7821.XX
031.0230.XX	069.7823.XX
031.0250.XX	069.7825.XX
031.0270.XX	069.7827.XX
031.0300.XX	069.7830.XX
031.0320.XX	069.7832.XX

ASSEMBLY SILL BRICKWORK

ALU SILL/THRESHOLD - TRADITIONAL BRICKWORK

MASTERLINE 8-Fu

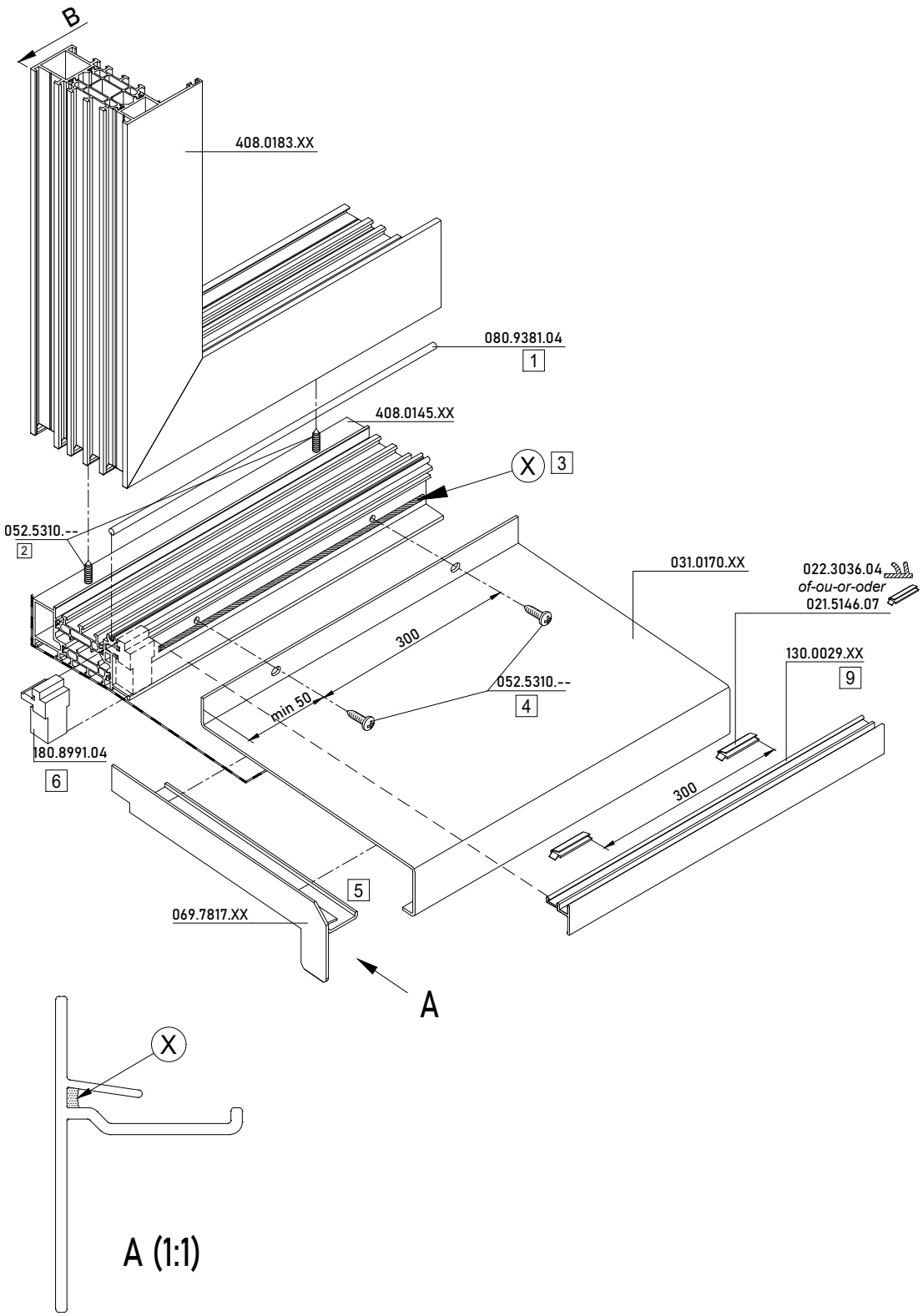

ASSEMBLY SILL BRICKWORK

ALU SILL/THRESHOLD - TRADITIONAL BRICKWORK

MASTERLINE 8-Fu

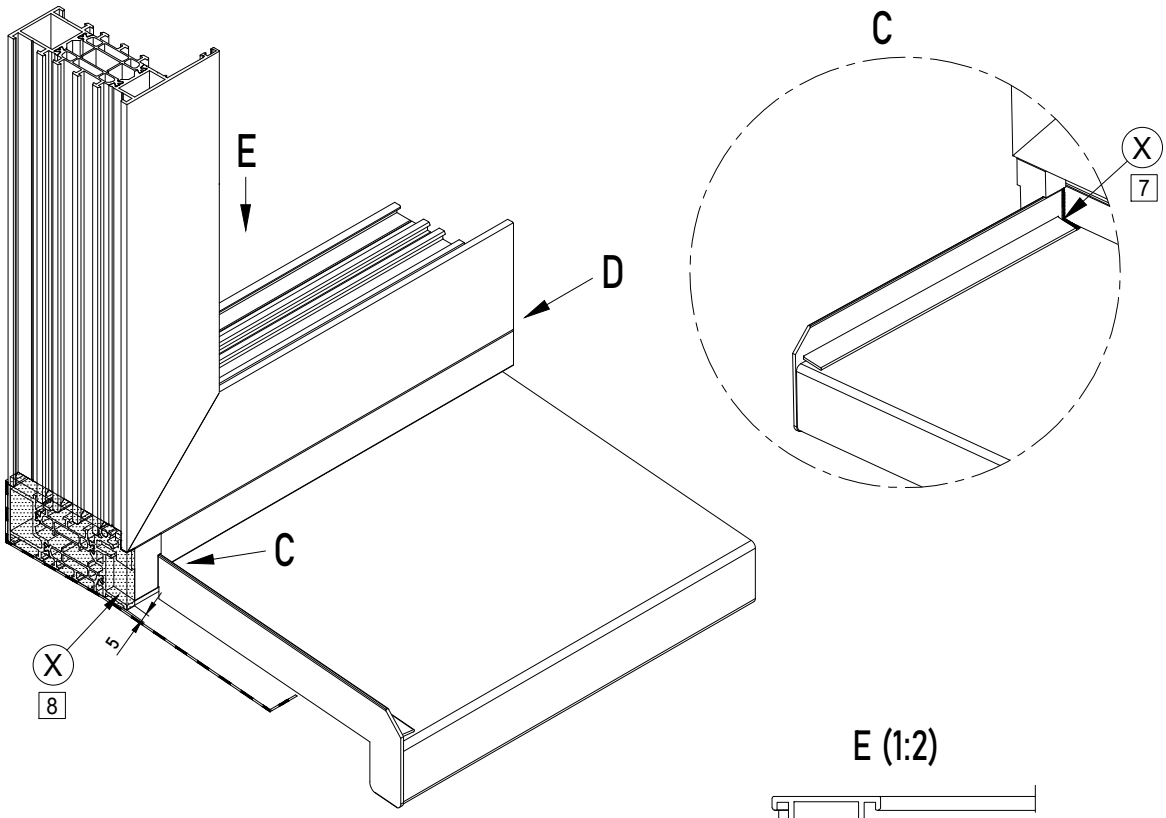

D (1:2)

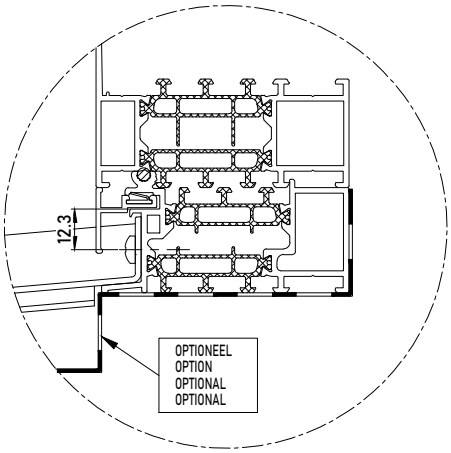

E (1:2)

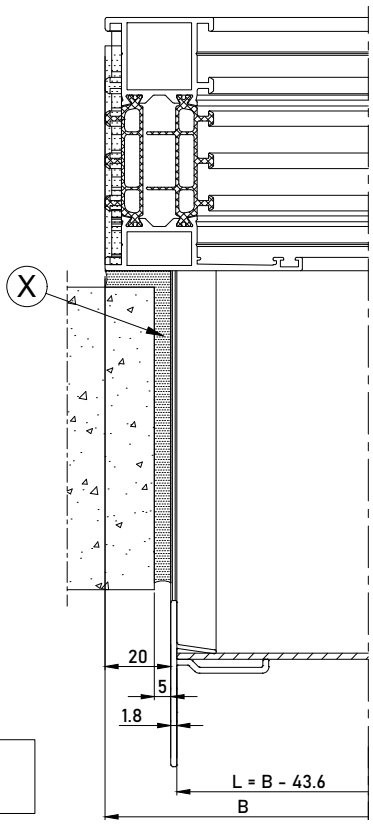

MONTAGEVOLGORDE
L'ORDRE DE MONTAGE
THE ORDER OF ASSEMBLY
MONTAGEREIHENFOLGE
1 2 3 .

X DICHTINGSMIDDEL
MATIERE D'ETANCHEITE
SEALING AGENT
ABDICHTUNG

ASSEMBLY SILL BRICKWORK

ALU SILL/THRESHOLD - TRADITIONAL BRICKWORK

MASTERLINE 8-Fu

			#	Lm
408.0145.XX			1	B
031.0170.XX			1	B - 43.6
130.0029.XX			1	B - 43.6

DORPEL BAVETTE SILL FENSTERBANK	EINDSTUK DORPEL PIECE D'EXTREMITE SEUIL END PIECE SILL ENDSTUECKWETTERSCHENKEL
031.1050.XX	069.7805.XX
031.0070.XX	069.7807.XX
031.0090.XX	069.7809.XX
031.0110.XX	069.7811.XX
031.0130.XX	069.7813.XX
031.0150.XX	069.7815.XX
031.0170.XX	069.7817.XX
031.0190.XX	069.7819.XX
031.0210.XX	069.7821.XX
031.0230.XX	069.7823.XX
031.0250.XX	069.7825.XX
031.0270.XX	069.7827.XX
031.0300.XX	069.7830.XX
031.0320.XX	069.7832.XX

ASSEMBLY SILL PLASTERING

ALU SILL/THRESHOLD - PLASTERING

MASTERLINE 8-Fu

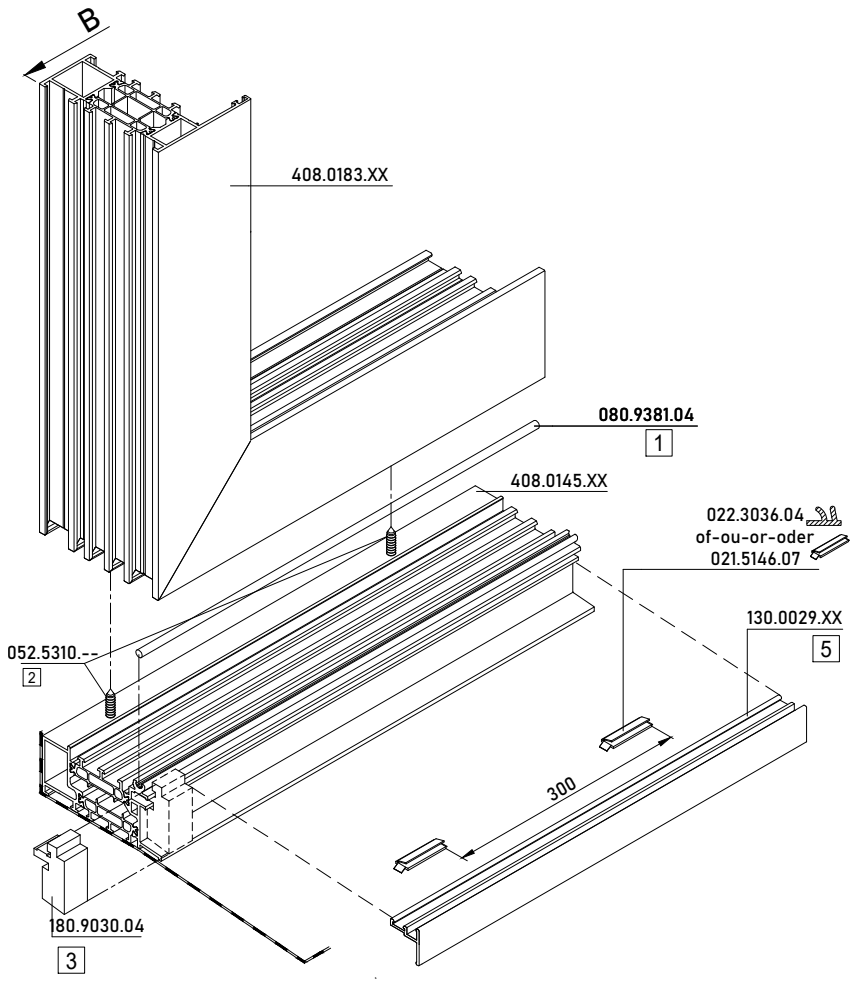

			#	Lm
408.0145.XX			1	B
130.0029.XX			1	B - 40

ASSEMBLY SILL PLASTERING

ALU SILL/THRESHOLD - PLASTERING

MASTERLINE 8-Fu

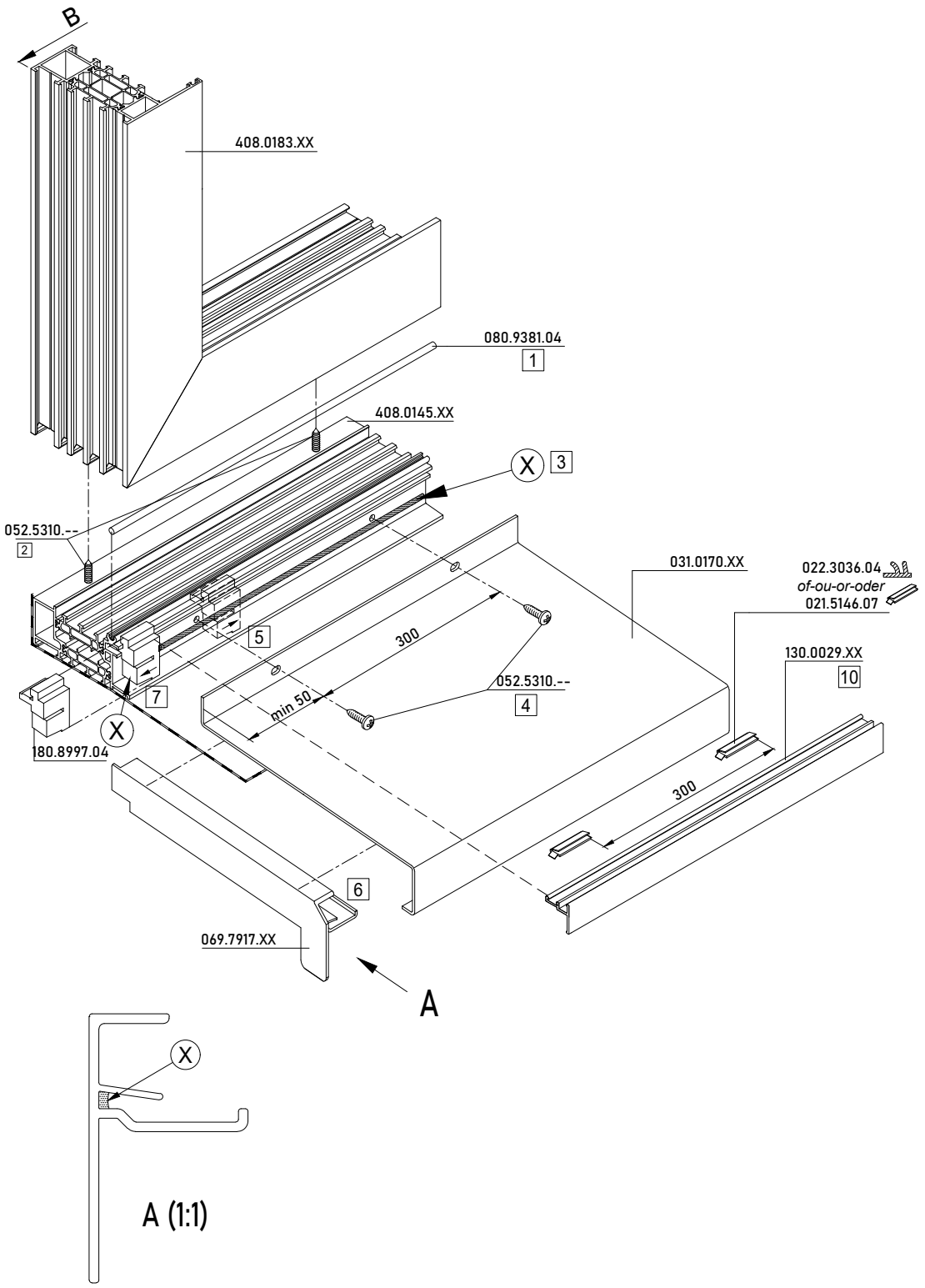

ASSEMBLY SILL PLASTERING

ALU SILL/THRESHOLD - PLASTERING

MASTERLINE 8-Fu

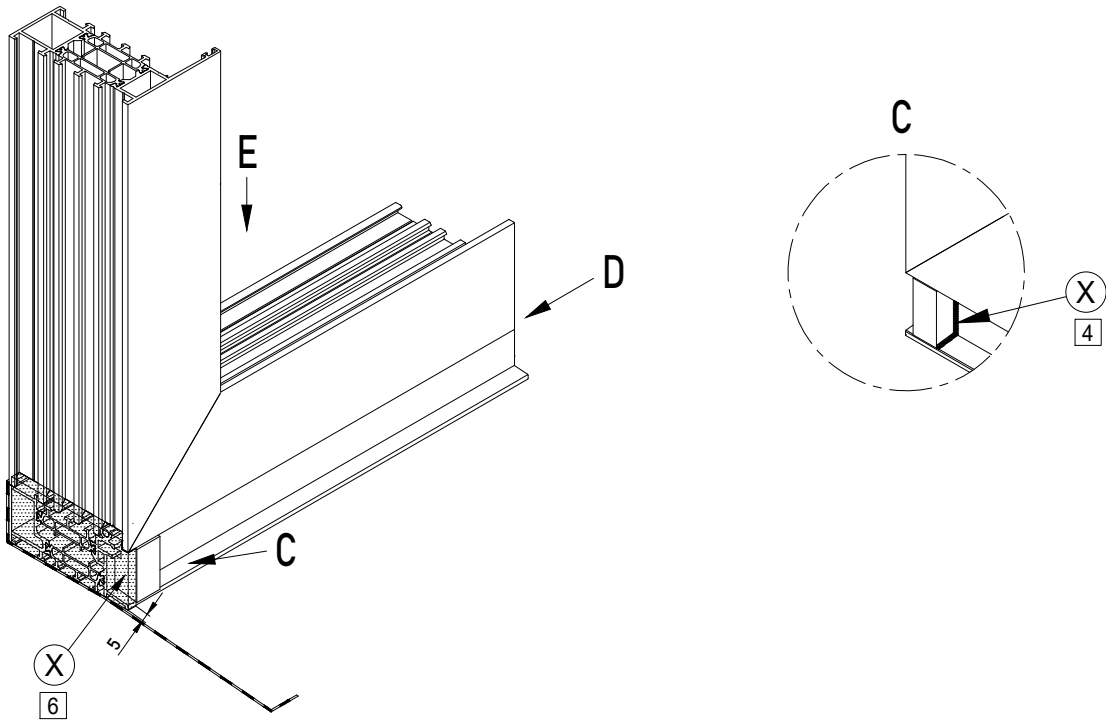

D (1:2)

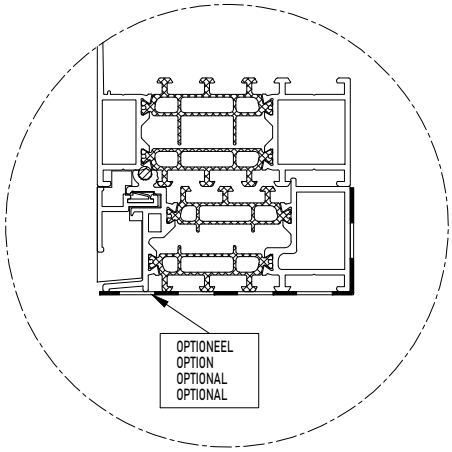

E (1:2)

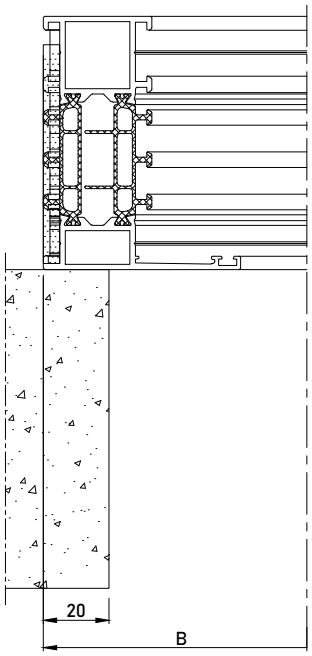

MONTAGEVOLGORDE L 'ORDRE DE MONTAGE THE ORDER OF ASSEMBLY MONTAGEREIHENFOLGE	1 2 3 .
X	DICHTINGSMIDDEL MATIERE D'ETANCHEITE SEALING AGENT ABDICHTUNG

ASSEMBLY SILL PLASTERING

ALU SILL/THRESHOLD - PLASTERING

MASTERLINE 8-Fu

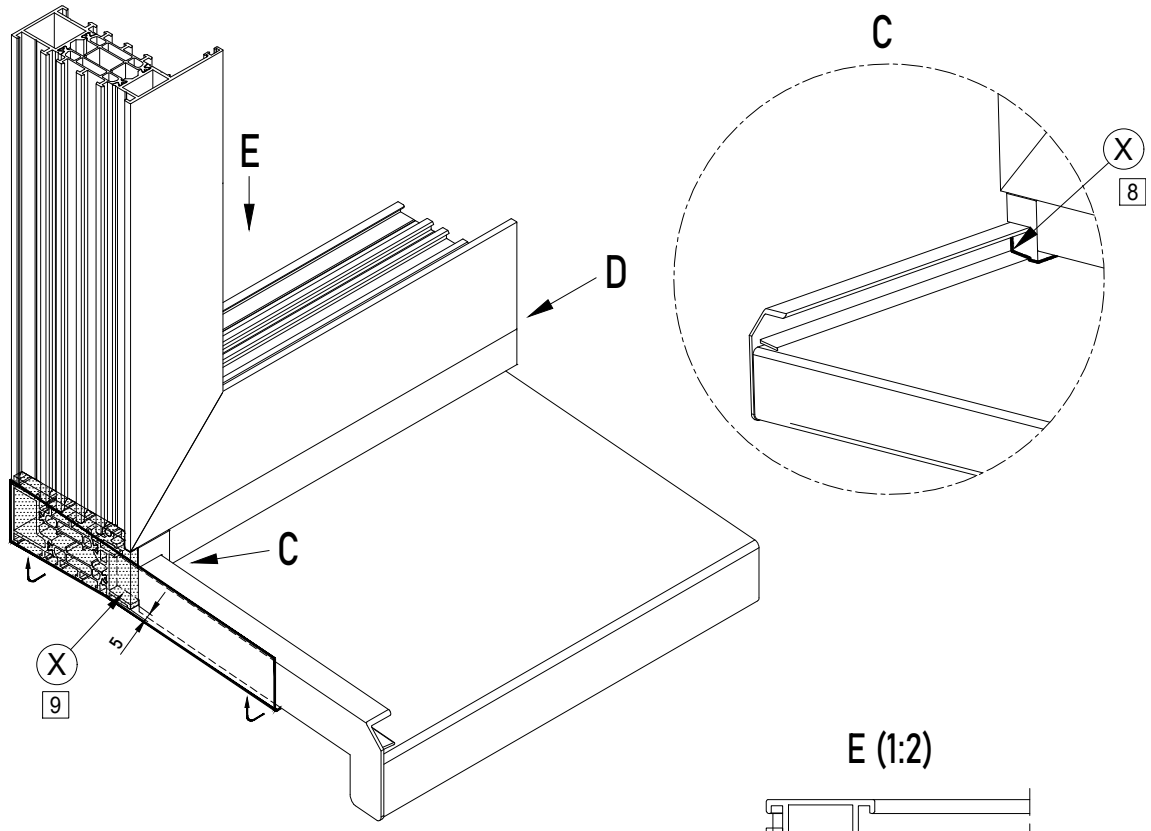

D (1:2)

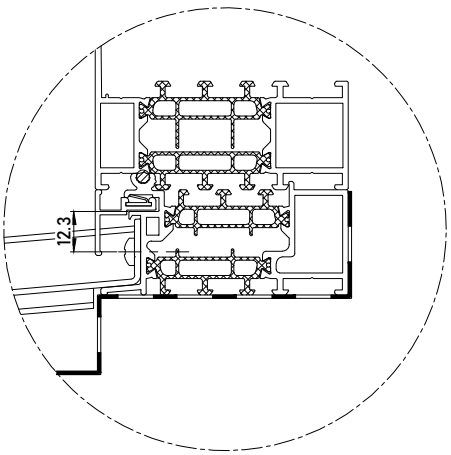

E (1:2)

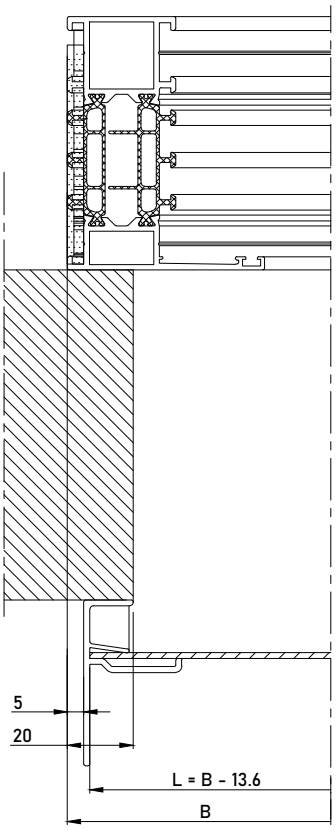

MONTAGEVOLGORDE
L'ORDRE DE MONTAGE
THE ORDER OF ASSEMBLY
MONTAGEREIHENFOLGE

1 2 3 .

X DICHTINGSMIDDEL
MATIERE D'ETANCHEITE
SEALING AGENT
ABDICHTUNG

ASSEMBLY SILL PLASTERING

ALU SILL/THRESHOLD - PLASTERING

MASTERLINE 8-Fu

			#	Lm
408.0145.XX			1	B
031.0170.XX			1	B - 13.6
130.0029.XX			1	B - 50.1

DORPEL BAVETTE SILL FENSTERBANK	EINDSTUK DORPEL PIECE D'EXTREMITE SEUIL END PIECE SILL ENDSTUECKWETTERSCHENKEL
031.1050.XX	069.7905.XX
031.0070.XX	069.7907.XX
031.0090.XX	069.7909.XX
031.0110.XX	069.7911.XX
031.0130.XX	069.7913.XX
031.0150.XX	069.7915.XX
031.0170.XX	069.7917.XX
031.0190.XX	069.7919.XX
031.0210.XX	069.7921.XX
031.0230.XX	069.7923.XX
031.0250.XX	069.7925.XX
031.0270.XX	069.7927.XX
031.0300.XX	069.7930.XX
031.0320.XX	069.7932.XX

ASSEMBLY SILL SILL

SILL | 052.5310.--, 108.0183.XX, 021.5146.--, 030.0029.XX

MASTERLINE 8-Fu

108.0145.XX

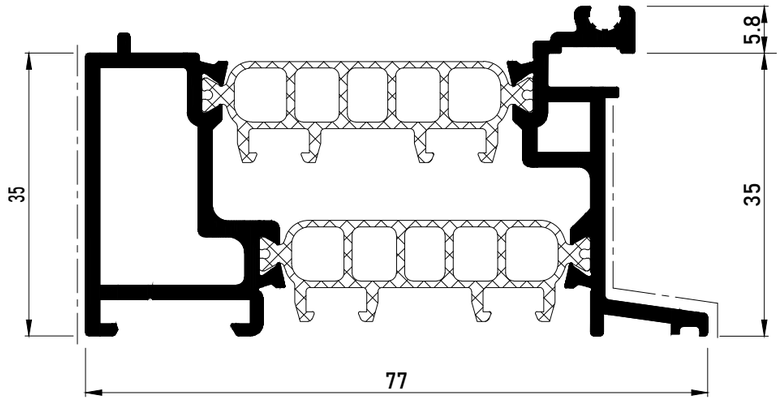

030.0029.XX

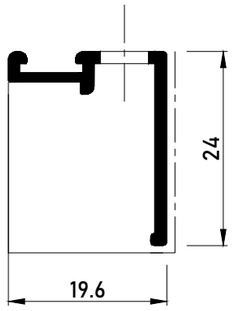

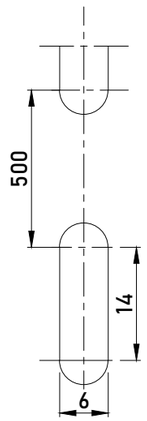

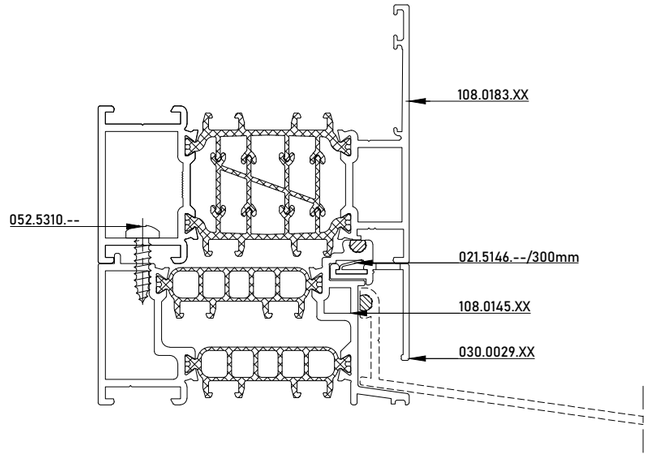

ASSEMBLY VENT LANDSCAPE PIVOT DOOR

ASSEMBLY VENT

MASTERLINE 8-Fu

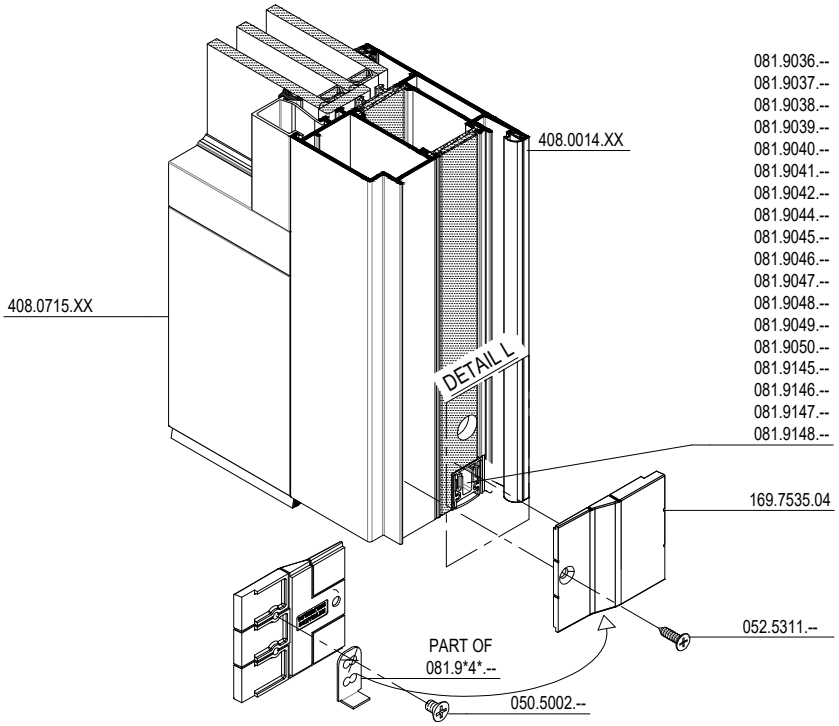

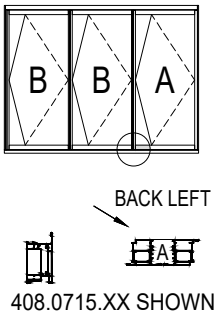

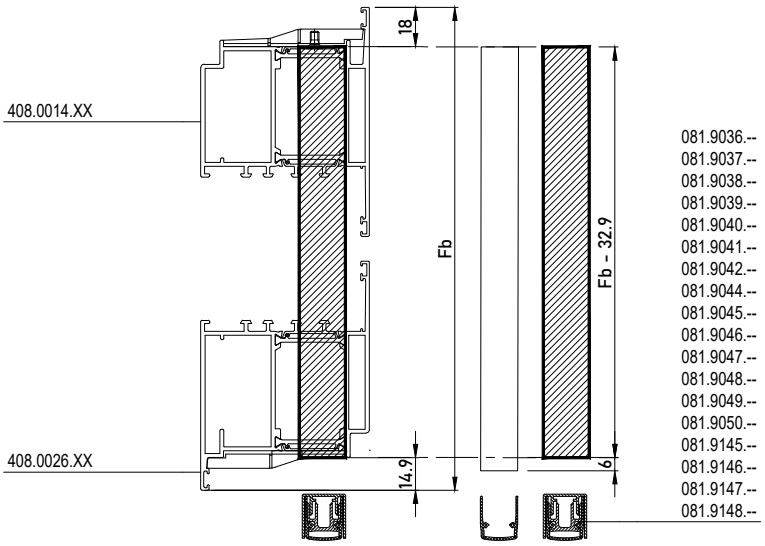

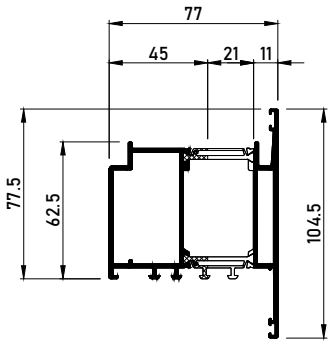

DETAIL L

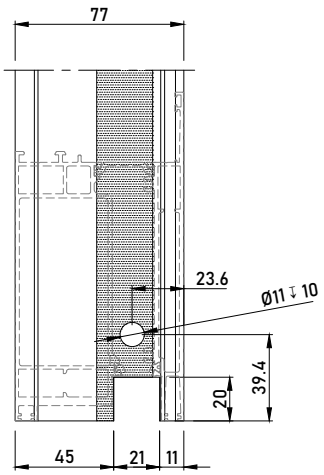

081.9036.--	L = 460mm
081.9037.--	L = 585mm
081.9038.--	L = 710mm
081.9039.--	L = 835mm
081.9040.--	L = 960mm
081.9042.--	L = 1085mm
081.9041.--	L = 1210mm
081.9050.--	L = 1335mm
081.9044.--	L = 1460mm
081.9045.--	L = 1585mm
081.9145.--	L = 1625mm
081.9046.--	L = 1750mm
081.9146.--	L = 1875mm
081.9047.--	L = 2000mm
081.9147.--	L = 2125mm
081.9048.--	L = 2250mm
081.9148.--	L = 2375mm
081.9049.--	L = 2500mm

ASSEMBLY VENT LANDSCAPE PIVOT DOOR

ASSEMBLY VENT

MASTERLINE 8-Fu

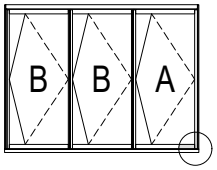

FRONT RIGHT

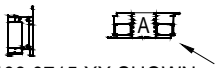

408.0715.XX SHOWN

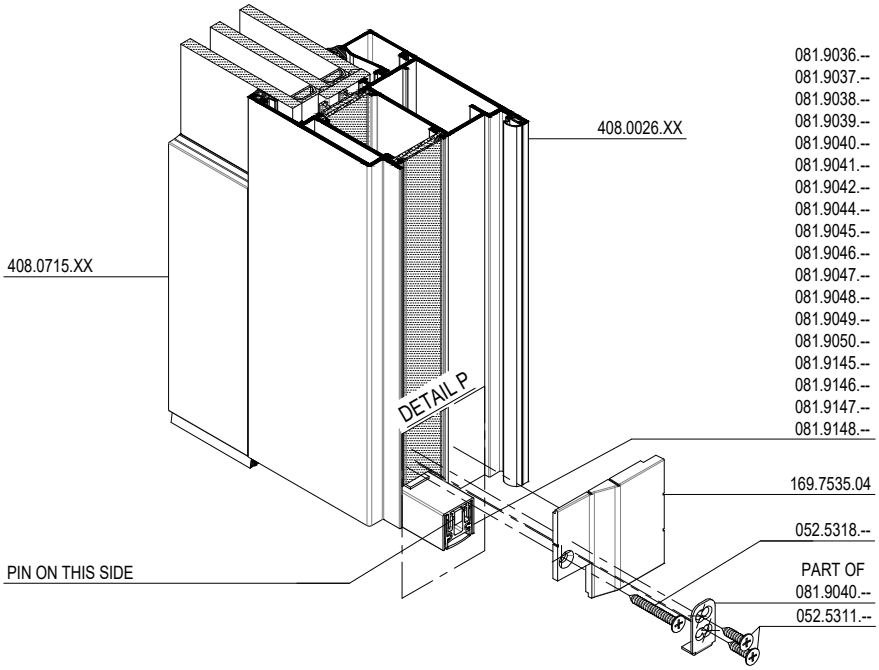

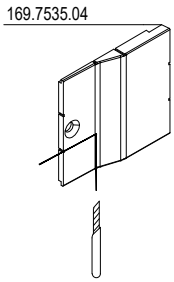

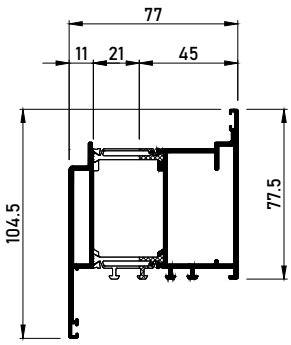

DETAIL P

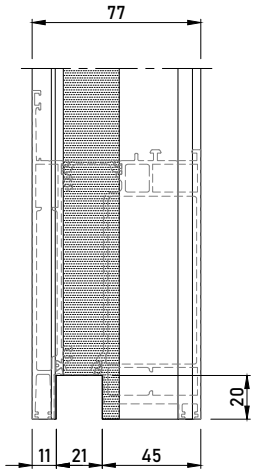

ASSEMBLY VENT LANDSCAPE PIVOT DOOR

ASSEMBLY VENT

MASTERLINE 8-Fu

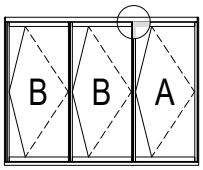

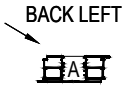

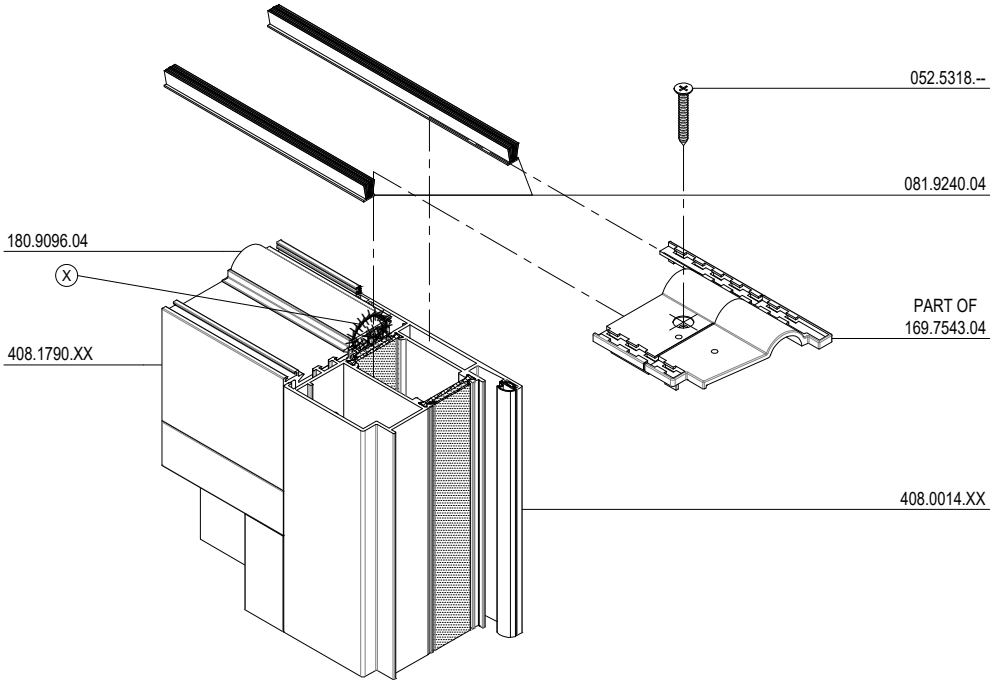

X DICHTINGSMIDDEL
MATIERE D'ETANCHEITE
SEALING AGENT
ABDICHTUNG

BIJKOMENDE INFO VOORBEREIDING/VERWERKING -> ZIE HOOFDSTUK F 'VERWERKINGSVOORSCHRIFTEN' !
INFO COMPLEMENTAIRE PREPARATION/USINAGE -> VOIR CHAPITRE F 'PRESCRIPTIONS DE MISE EN OEUVRE' !
ADDITIONAL INFO PREPARATION/PROCESSING -> SEE CHAPTER F 'PROCESSING DATA' !
ZUSAETZLICHE INFO VORBEREITUNG/VERARBEITUNG -> SIEHE KAPITEL F 'VERARBEITUNGSVORSCHRIFTEN' !

ASSEMBLY VENT LANDSCAPE PIVOT DOOR

ASSEMBLY VENT

MASTERLINE 8-Fu

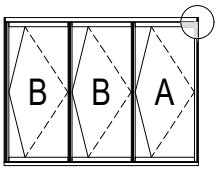

FRONT RIGHT



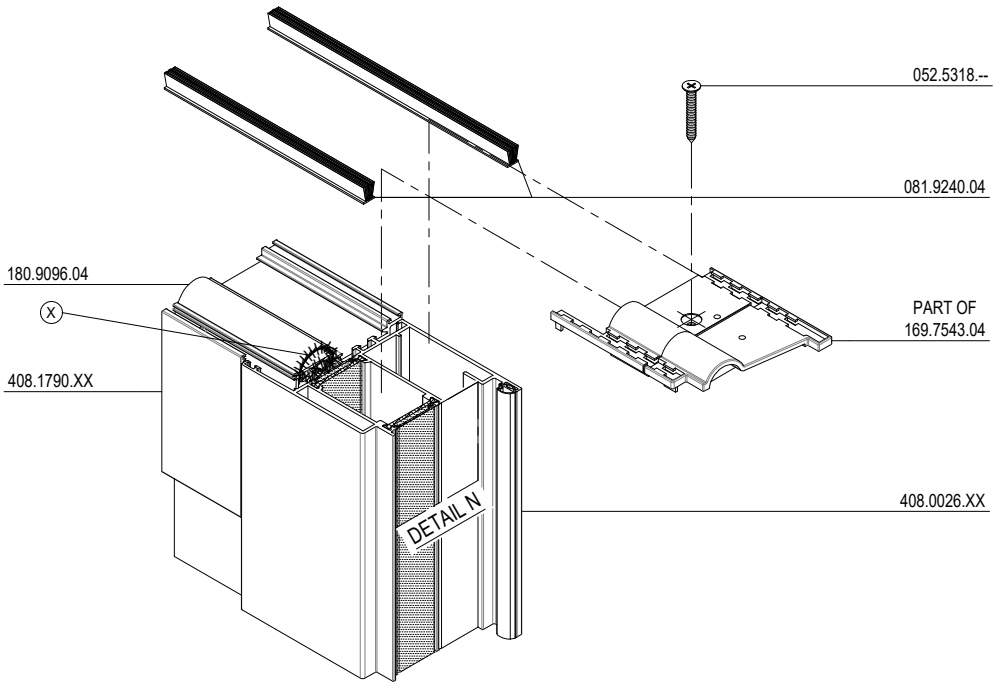

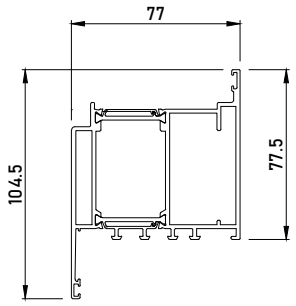

DETAIL N

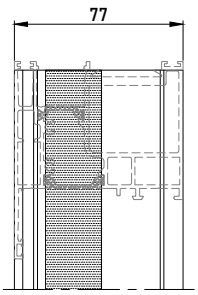

X DICHTINGSMIDDEL
MATIERE D'ETANCHEITE
SEALING AGENT
ABDICHTUNG

BIJKOMENDE INFO VOORBEREIDING/VERWERKING -> ZIE HOOFDSTUK F 'VERWERKINGSVOORSCHRIFTEN' !
INFO COMPLEMENTAIRE PREPARATION/USINAGE -> VOIR CHAPITRE F 'PRESCRIPTIONS DE MISE EN OEUVRE' !
ADDITIONAL INFO PREPARATION/PROCESSING -> SEE CHAPTER F 'PROCESSING DATA' !
ZUSAETZLICHE INFO VORBEREITUNG/VERARBEITUNG -> SIEHE KAPITEL F 'VERARBEITUNGSVORSCHRIFTEN' !

ASSEMBLY VENT LANDSCAPE PIVOT DOOR

ASSEMBLY VENT

MASTERLINE 8-Fu

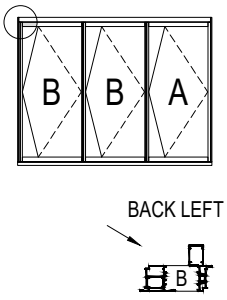

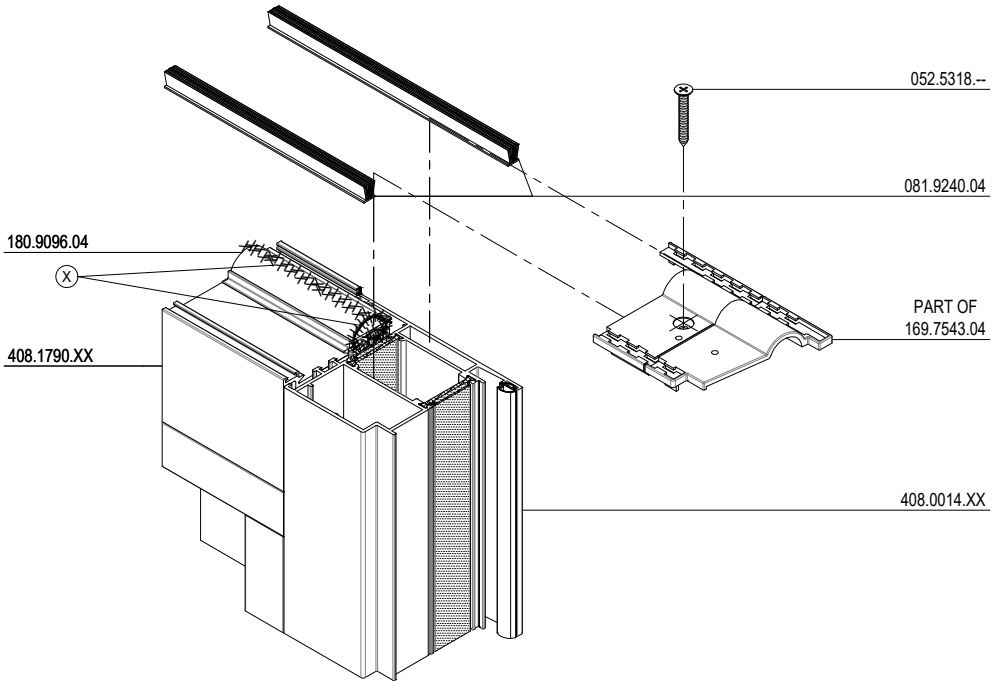

X DICHTINGSMIDDEL
MATIERE D'ETANCHEITE
SEALING AGENT
ABDICHTUNG

BIJKOMENDE INFO VOORBEREIDING/VERWERKING -> ZIE HOOFDSTUK F 'VERWERKINGSVOORSCHRIFTEN' !
INFO COMPLEMENTAIRE PREPARATION/USINAGE -> VOIR CHAPITRE F 'PRESCRIPTIONS DE MISE EN OEUVRE' !
ADDITIONAL INFO PREPARATION/PROCESSING -> SEE CHAPTER F 'PROCESSING DATA' !
ZUSAETZLICHE INFO VORBEREITUNG/VERARBEITUNG -> SIEHE KAPITEL F 'VERARBEITUNGSVORSCHRIFTEN' !

ASSEMBLY VENT LANDSCAPE PIVOT DOOR

ASSEMBLY VENT

MASTERLINE 8-Fu

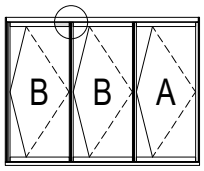

FRONT RIGHT

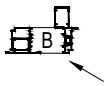

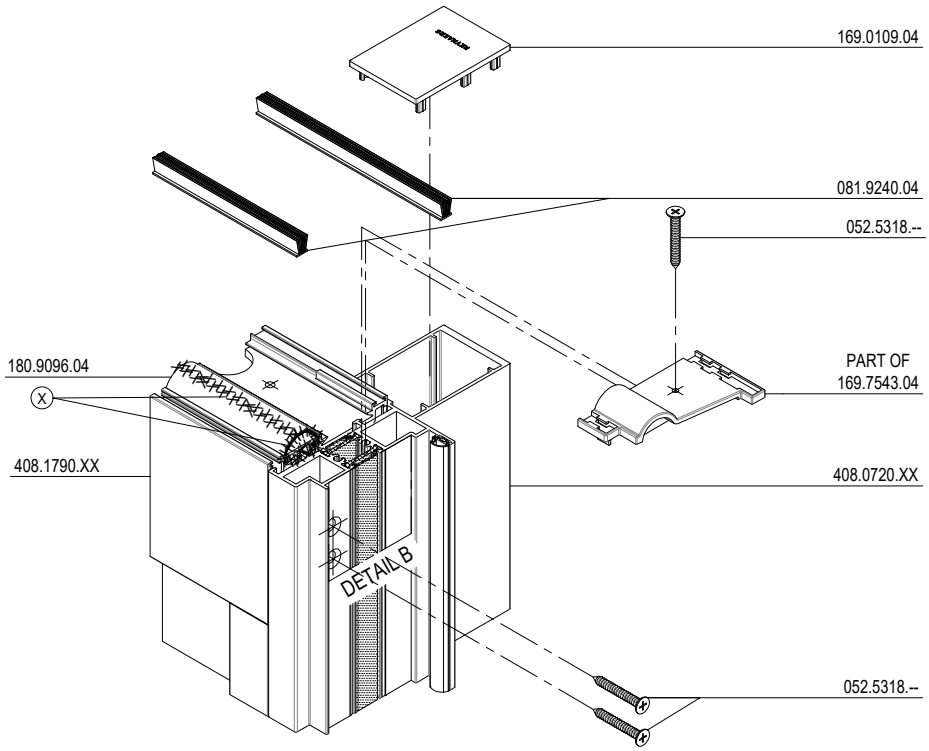

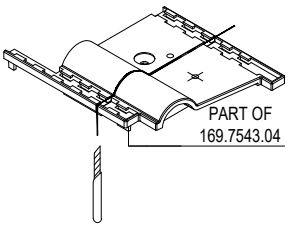

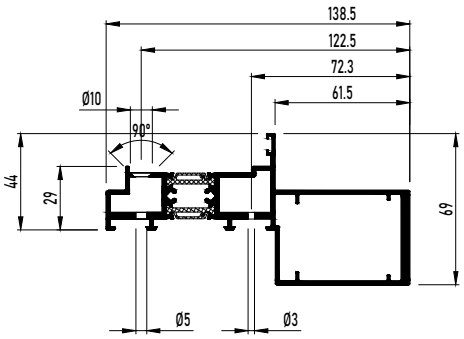

DETAIL B

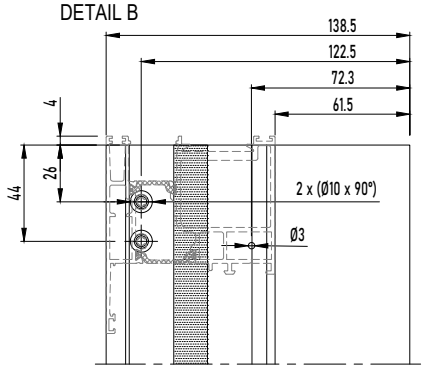

X DICHTINGSMIDDEL
MATIERE D'ETANCHEITE
SEALING AGENT
ABDICHTUNG

BIJKOMENDE INFO VOORBEREIDING/VERWERKING -> ZIE HOOFDSTUK F 'VERWERKINGSVOORSCHRIFTEN' !
INFO COMPLEMENTAIRE PREPARATION/USINAGE -> VOIR CHAPITRE F 'PRESCRIPTIONS DE MISE EN OEUVRE' !
ADDITIONAL INFO PREPARATION/PROCESSING -> SEE CHAPTER F 'PROCESSING DATA' !
ZUSAETZLICHE INFO VORBEREITUNG/VERARBEITUNG -> SIEHE KAPITEL F 'VERARBEITUNGSVORSCHRIFTEN' !

ASSEMBLY VENT LANDSCAPE PIVOT DOOR

ASSEMBLY VENT | 408.0715.XX

MASTERLINE 8-Fu

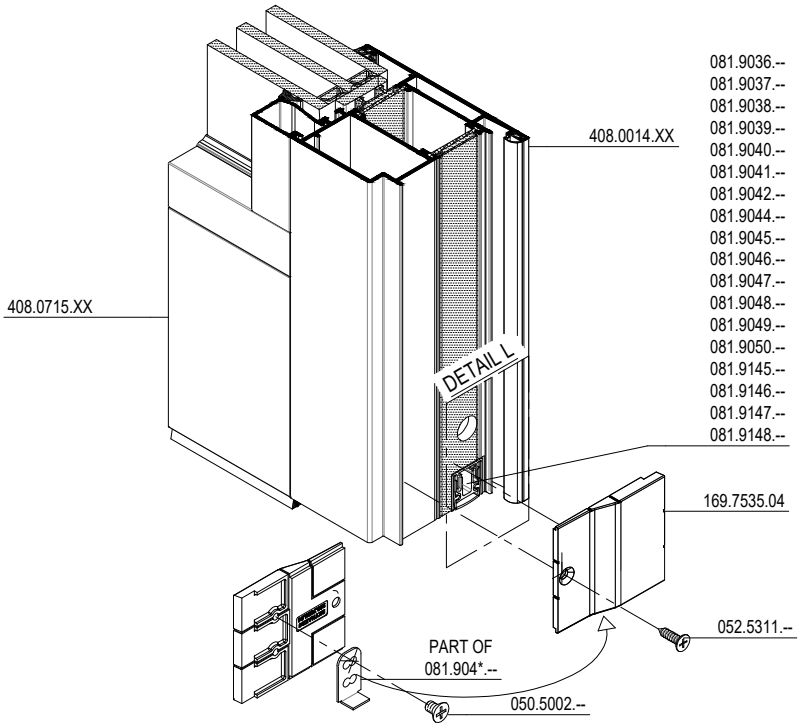

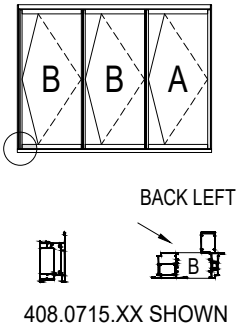

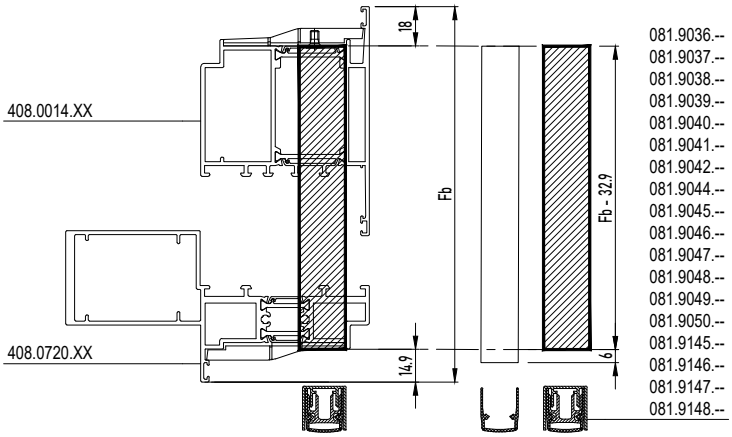

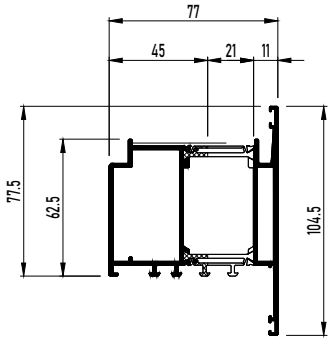

081.9036.--	L = 460mm
081.9037.--	L = 585mm
081.9038.--	L = 710mm
081.9039.--	L = 835mm
081.9040.--	L = 960mm
081.9042.--	L = 1085mm
081.9041.--	L = 1210mm
081.9050.--	L = 1335mm
081.9044.--	L = 1460mm
081.9045.--	L = 1585mm
081.9145.--	L = 1625mm
081.9046.--	L = 1750mm
081.9146.--	L = 1875mm
081.9047.--	L = 2000mm
081.9147.--	L = 2125mm
081.9048.--	L = 2250mm
081.9148.--	L = 2375mm
081.9049.--	L = 2500mm

DETAIL L

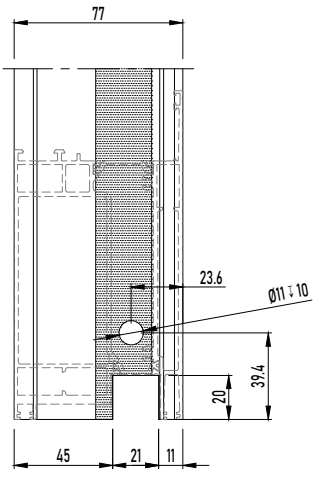

ASSEMBLY VENT LANDSCAPE PIVOT DOOR

ASSEMBLY VENT | 408.0715.XX

MASTERLINE 8-Fu

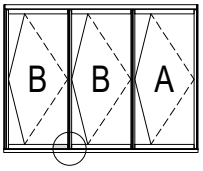

FRONT RIGHT

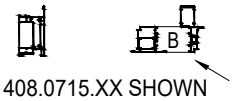

408.0715.XX SHOWN

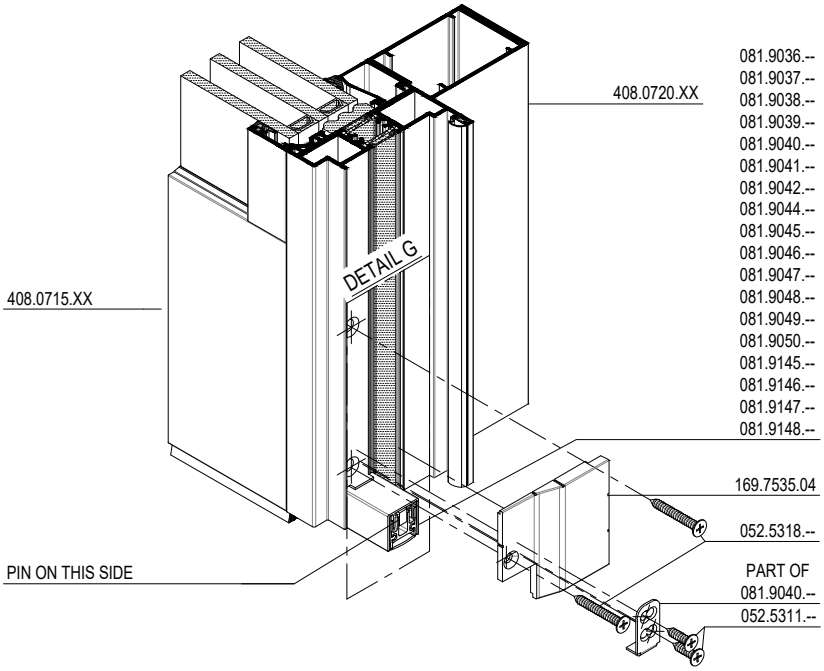

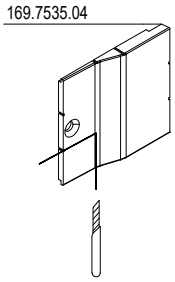

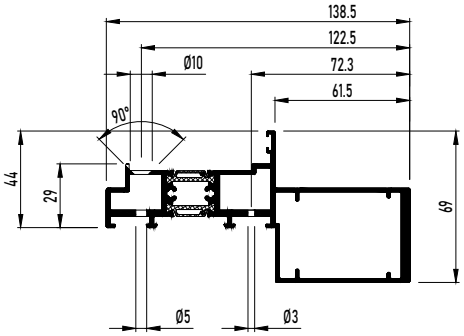

DETAIL G

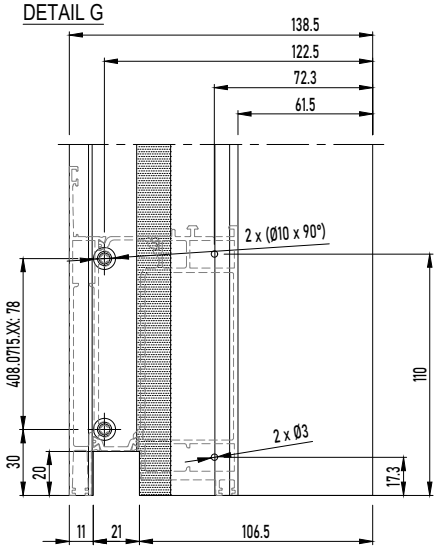

ASSEMBLY VENT LANDSCAPE PIVOT DOOR

ASSEMBLY VENT | 408.1790.XX

MASTERLINE 8-Fu

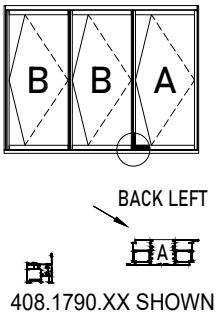

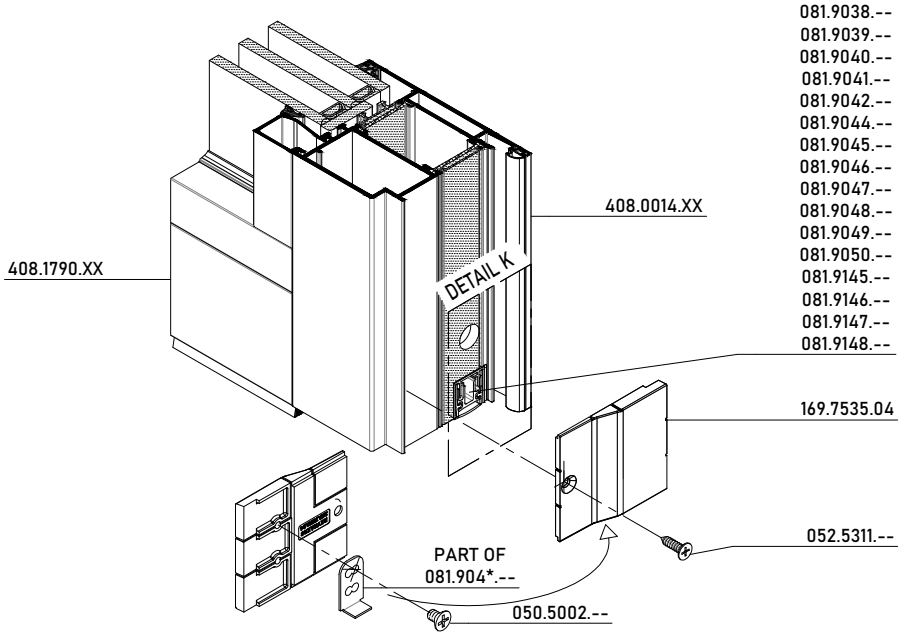

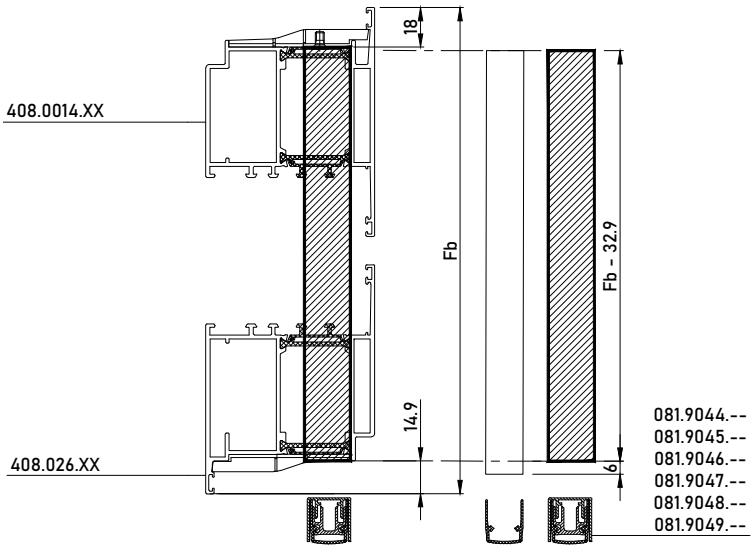

081.9044.--	L = 1460mm
081.9045.--	L = 1585mm
081.9046.--	L = 1750mm
081.9047.--	L = 2000mm
081.9048.--	L = 2250mm
081.9049.--	L = 2500mm

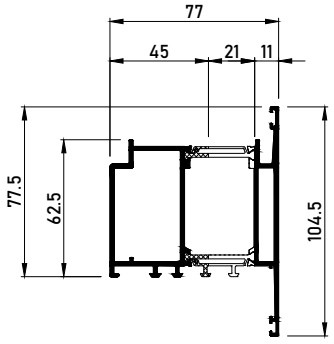

DETAIL K

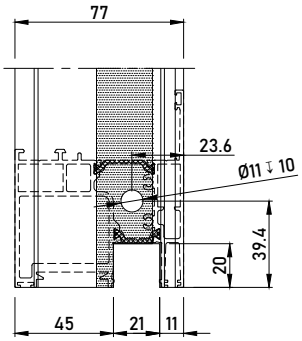

ASSEMBLY VENT LANDSCAPE PIVOT DOOR

ASSEMBLY VENT | 408.1790.XX

MASTERLINE 8-Fu

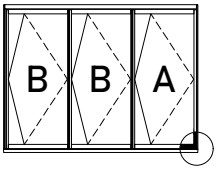

FRONT RIGHT

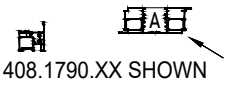

408.1790.XX SHOWN

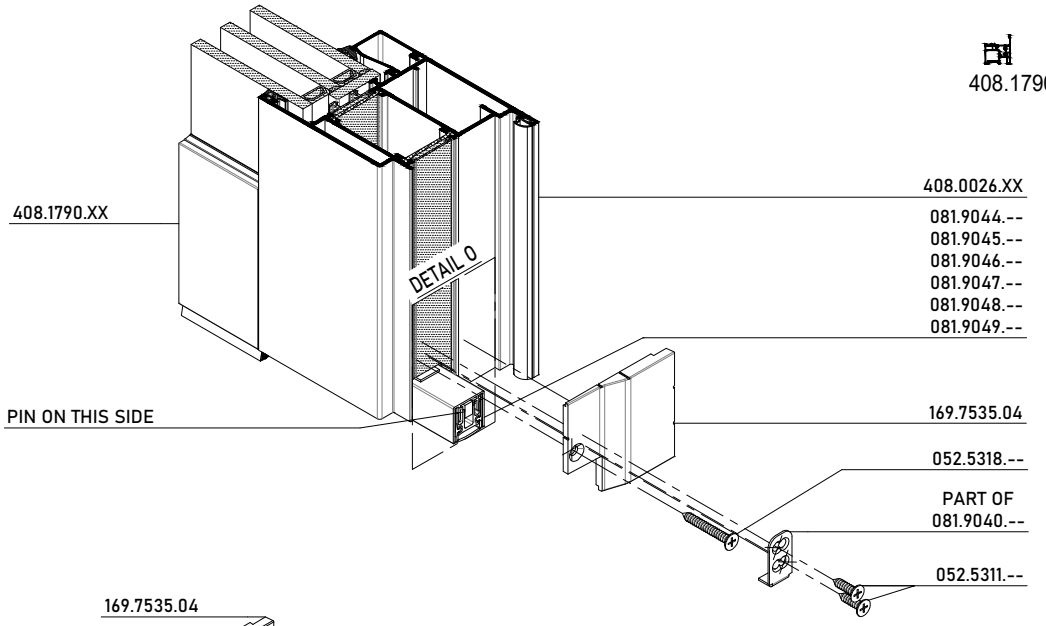

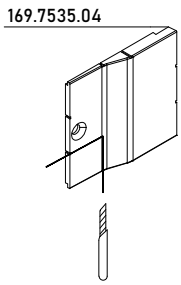

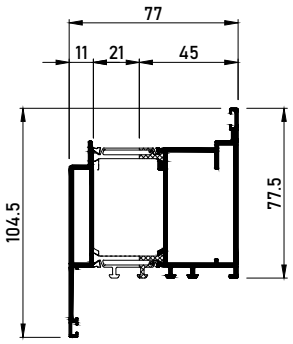

DETAIL 0

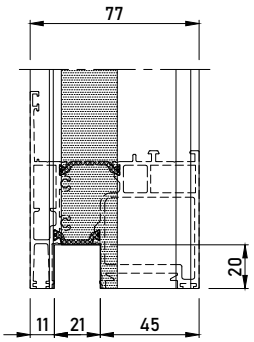

ASSEMBLY VENT PIVOT DOOR XL

ASSEMBLY VENT

MASTERLINE 8-Fu

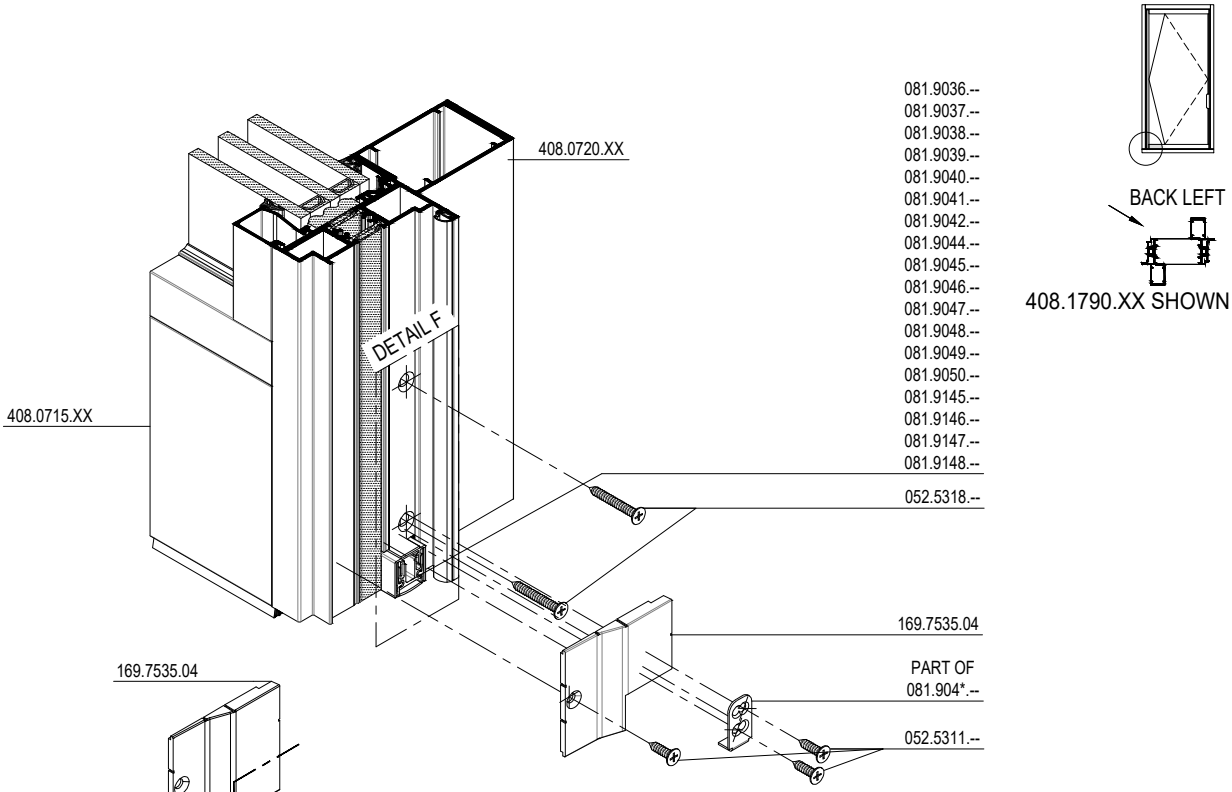

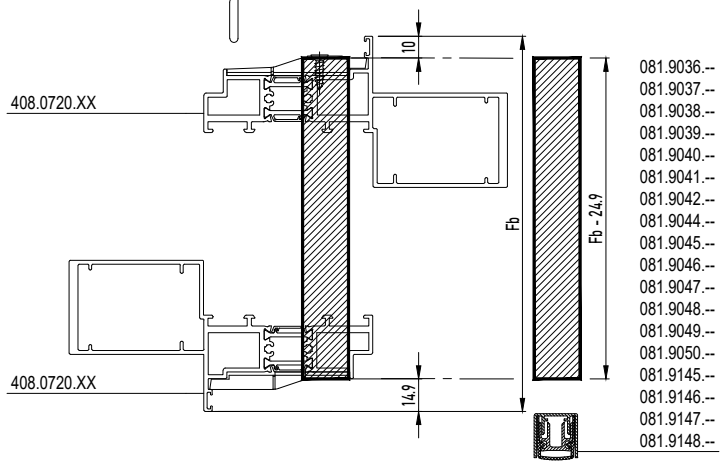

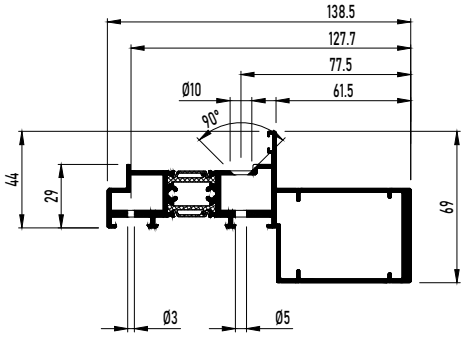

DETAIL F

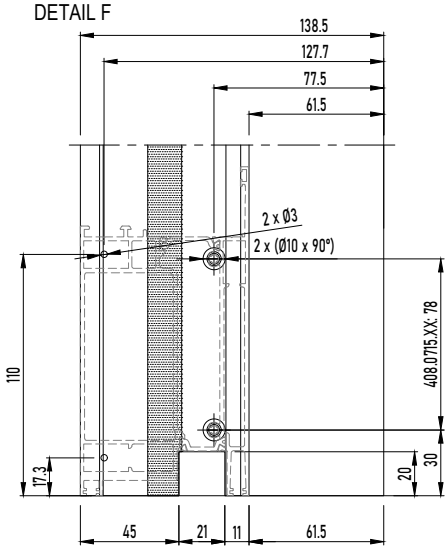

081.9036.--	L = 460mm
081.9037.--	L = 585mm
081.9038.--	L = 710mm
081.9039.--	L = 835mm
081.9040.--	L = 960mm
081.9042.--	L = 1085mm
081.9041.--	L = 1210mm
081.9050.--	L = 1335mm
081.9044.--	L = 1460mm
081.9045.--	L = 1585mm
081.9145.--	L = 1625mm
081.9046.--	L = 1750mm
081.9146.--	L = 1875mm
081.9047.--	L = 2000mm
081.9147.--	L = 2125mm
081.9048.--	L = 2250mm
081.9148.--	L = 2375mm
081.9049.--	L = 2500mm

ASSEMBLY VENT PIVOT DOOR XL

ASSEMBLY VENT

MASTERLINE 8-Fu

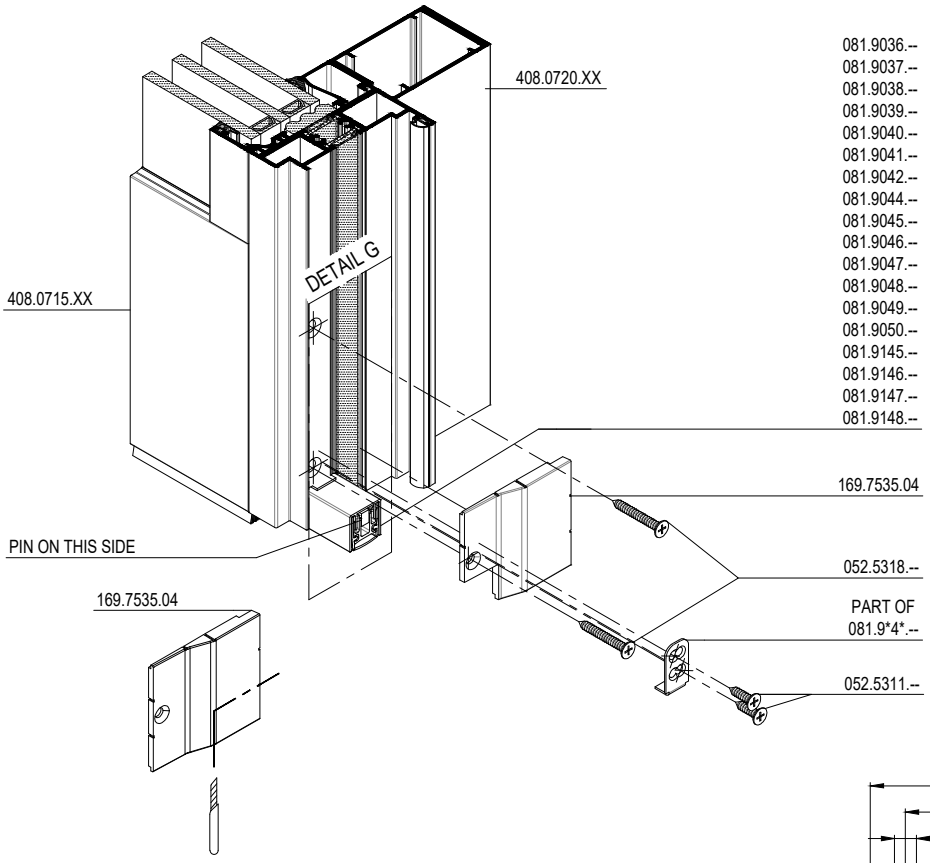

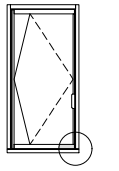

FRONT RIGHT

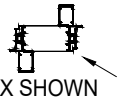

408.1790.XX SHOWN

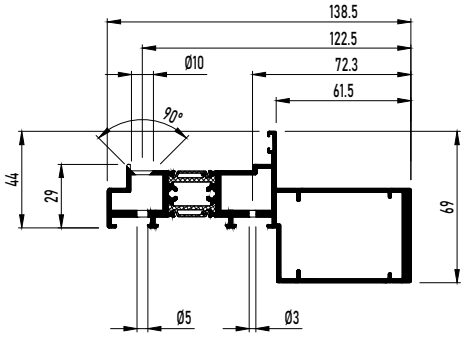

DETAIL G

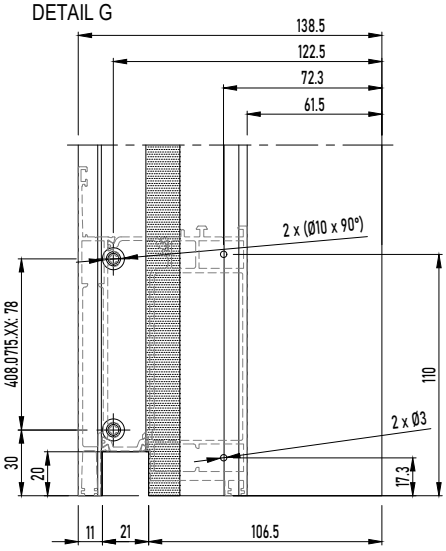

ASSEMBLY VENT PIVOT DOOR XL

ASSEMBLY VENT

MASTERLINE 8-Fu

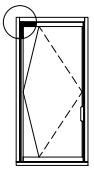

BACK LEFT

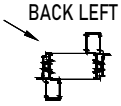

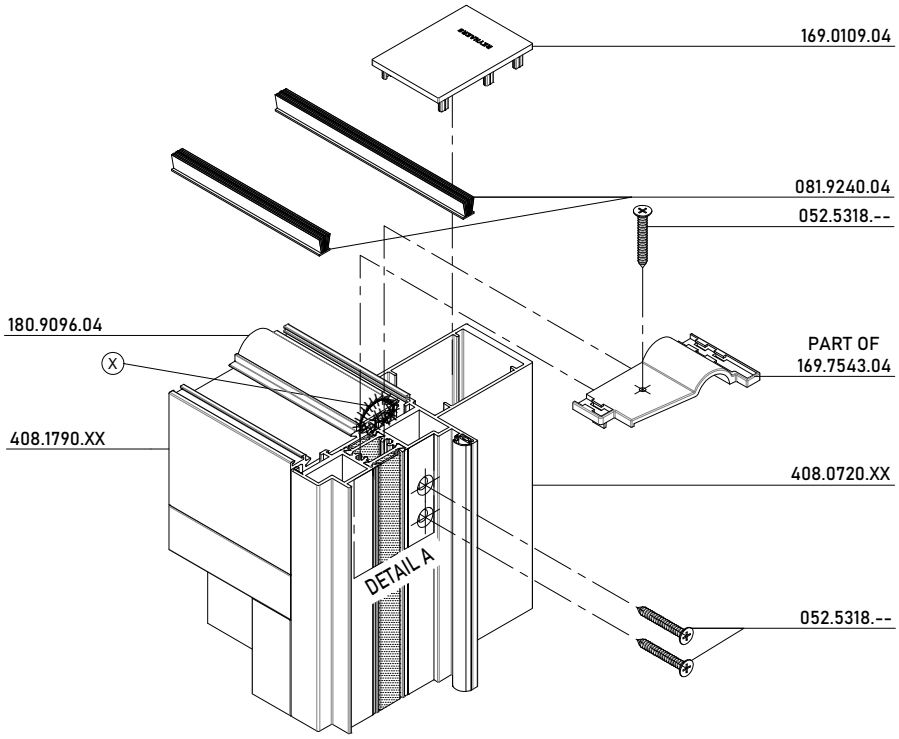

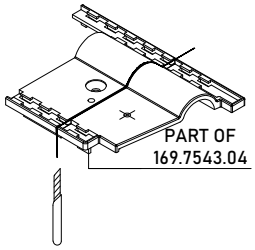

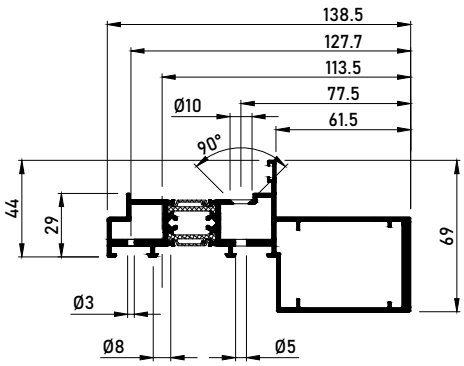

DETAIL A

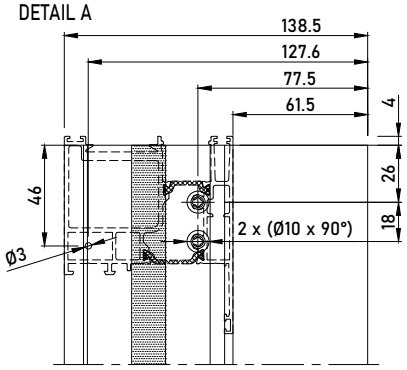

X DICHTINGSMIDDEL
MATIERE D'ETANCHEITE
SEALING AGENT
ABDICHTUNG

BOEKOMENDE INFO VOORBEREIDING/VERWERKING -> ZIE HOOFDSTUK F 'VERWERKINGSVOORSCHRIFTEN' !
INFO COMPLEMENTAIRE PREPARATION/USINAGE -> VOIR CHAPITRE F 'PRESCRIPTIONS DE MISE EN OEUVRE' !
ADDITIONAL INFO PREPARATION/PROCESSING -> SEE CHAPTER F 'PROCESSING DATA' !
ZUSAETZLICHE INFO VORBEREITUNG/VERARBEITUNG -> SIEHE KAPITEL F 'VERARBEITUNGSVORSCHRIFTEN' !

ASSEMBLY VENT PIVOT DOOR XL

ASSEMBLY VENT

MASTERLINE 8-Fu

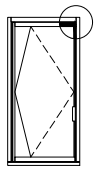

FRONT RIGHT

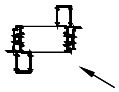

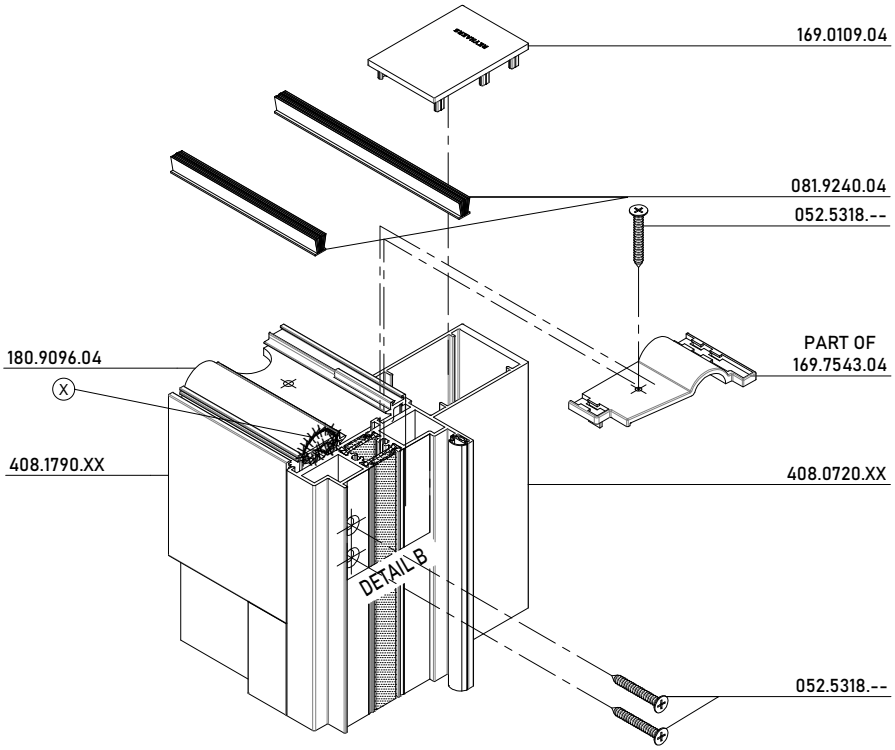

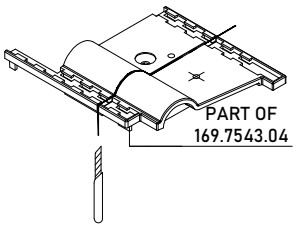

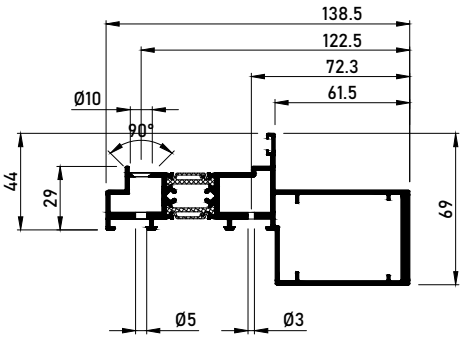

DETAIL B

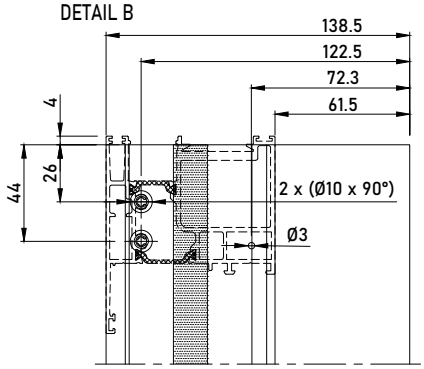

X DICHTINGSMIDDEL
MATIERE D'ETANCHEITE
SEALING AGENT
ABDICHTUNG

BIJKOMENDE INFO VOORBEREIDING/VERWERKING -> ZIE HOOFDSTUK F 'VERWERKINGSVOORSCHRIFTEN' !
INFO COMPLEMENTAIRE PREPARATION/USINAGE -> VOIR CHAPITRE F 'PRESCRIPTIONS DE MISE EN OEUVRE' !
ADDITIONAL INFO PREPARATION/PROCESSING -> SEE CHAPTER F 'PROCESSING DATA' !
ZUSAETZLICHE INFO VORBEREITUNG/VERARBEITUNG -> SIEHE KAPITEL F 'VERARBEITUNGSVORSCHRIFTEN' !

ASSEMBLY VENT PIVOT DOOR XL

ASSEMBLY VENT | 408.1790.XX

MASTERLINE 8-Fu

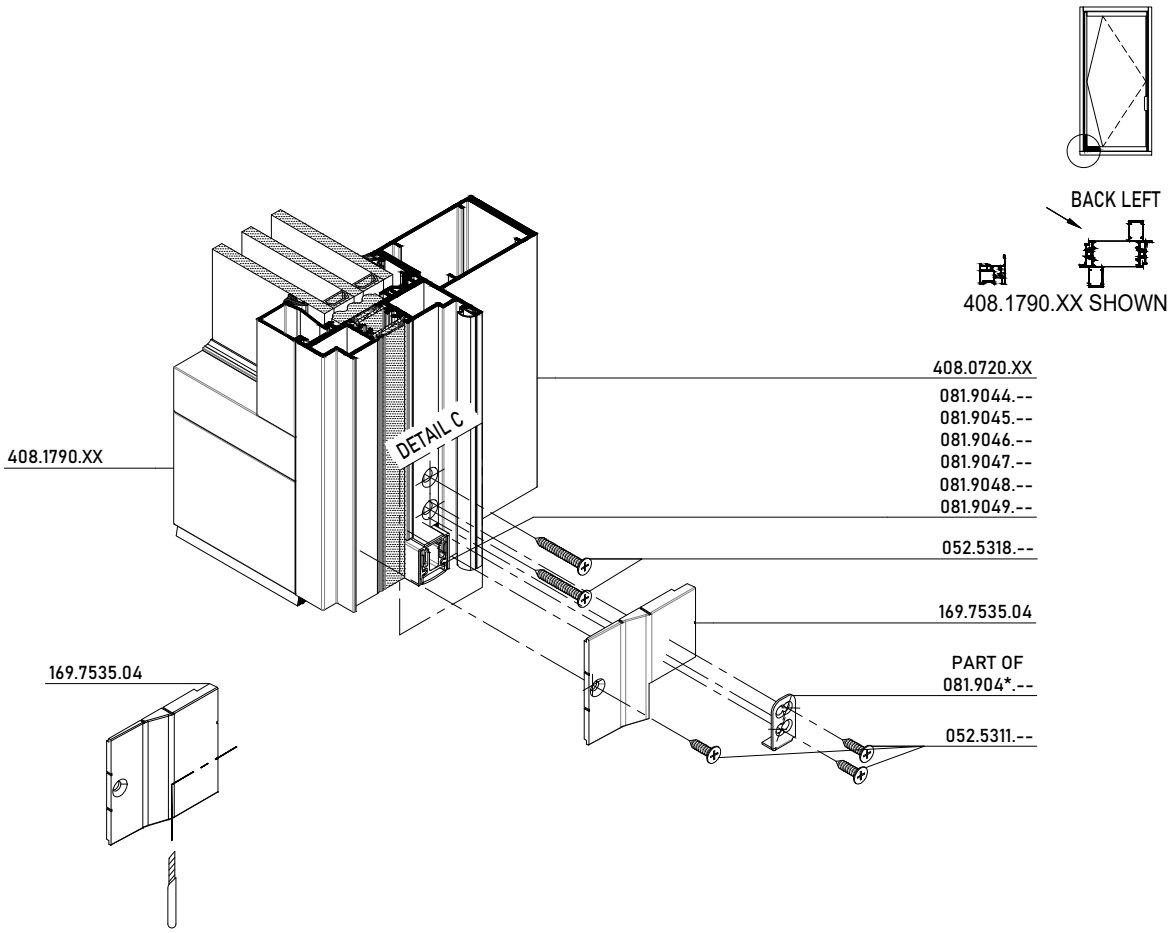

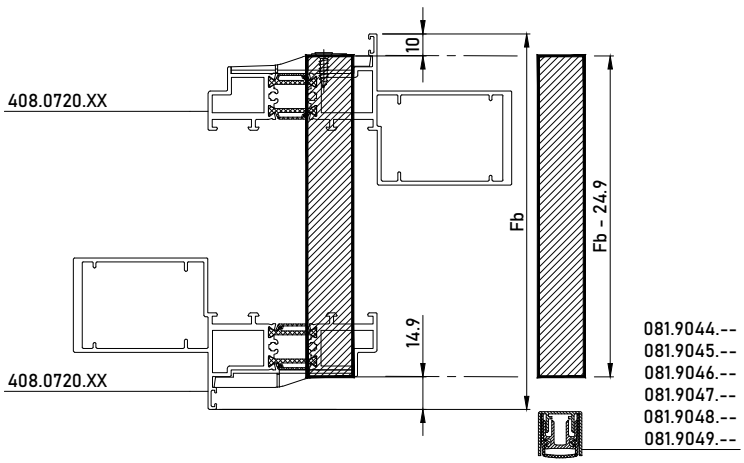

081.9044.--	L = 1460mm
081.9045.--	L = 1585mm
081.9046.--	L = 1750mm
081.9047.--	L = 2000mm
081.9048.--	L = 2250mm
081.9049.--	L = 2500mm

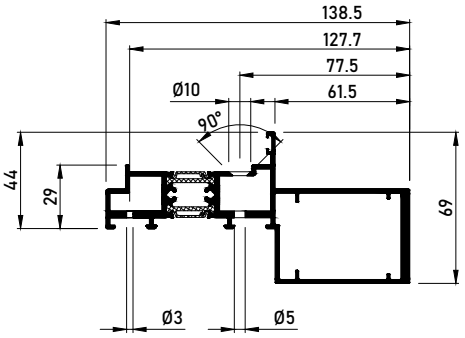

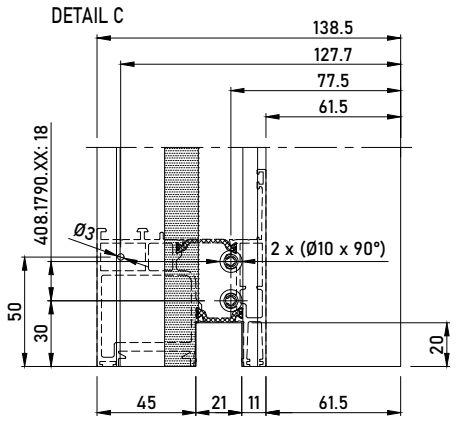

ASSEMBLY VENT PIVOT DOOR XL

ASSEMBLY VENT | 408.1790.XX

MASTERLINE 8-Fu

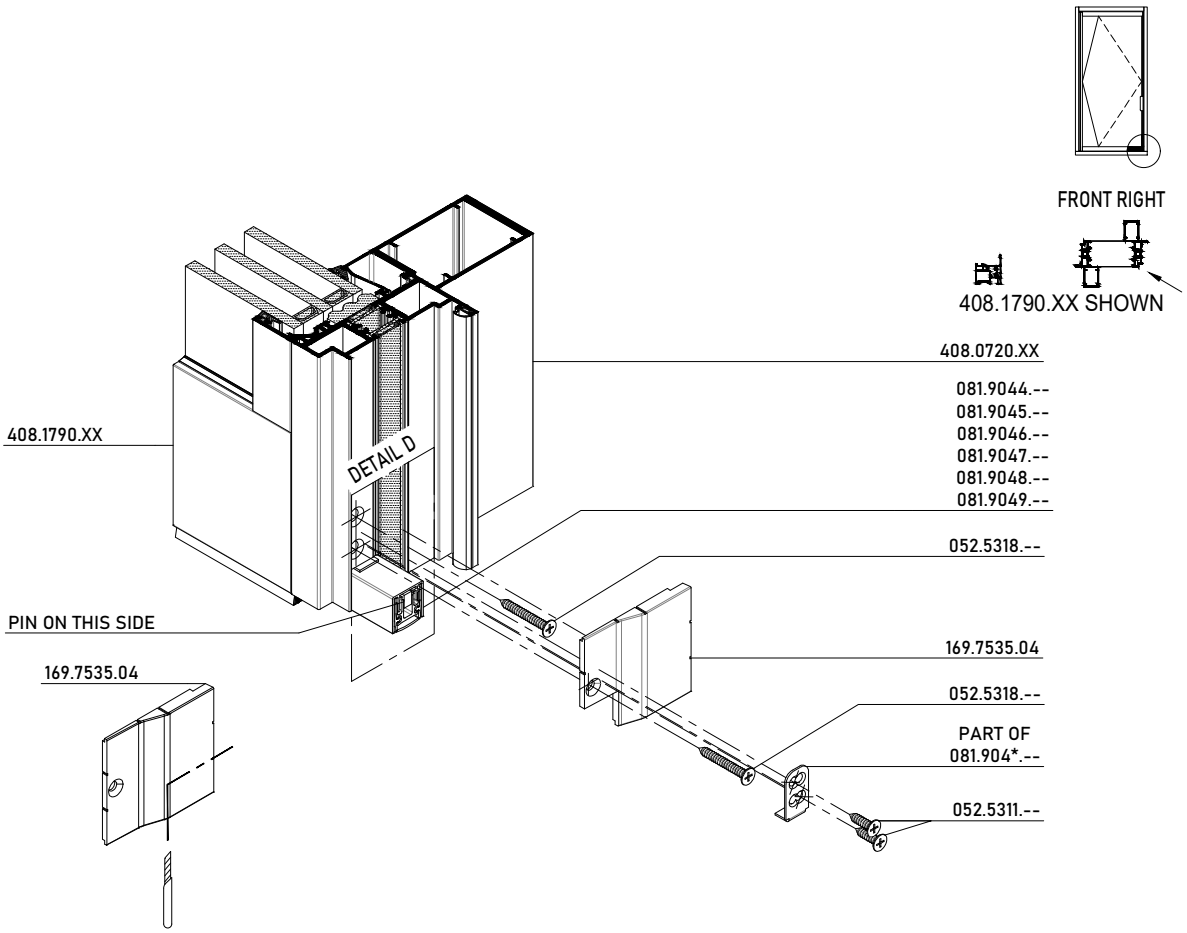

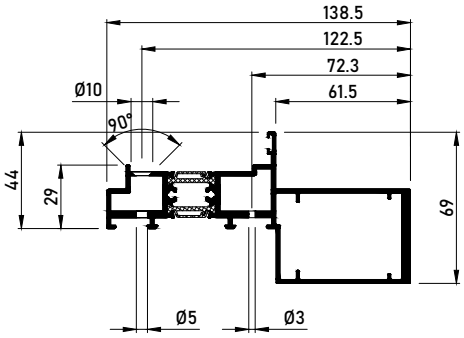

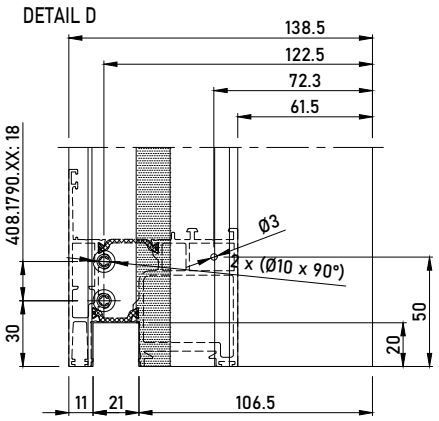

ASSEMBLY VENT PIVOT DOOR XL

CORNER CONNECTION VENT

MASTERLINE 8-Fu

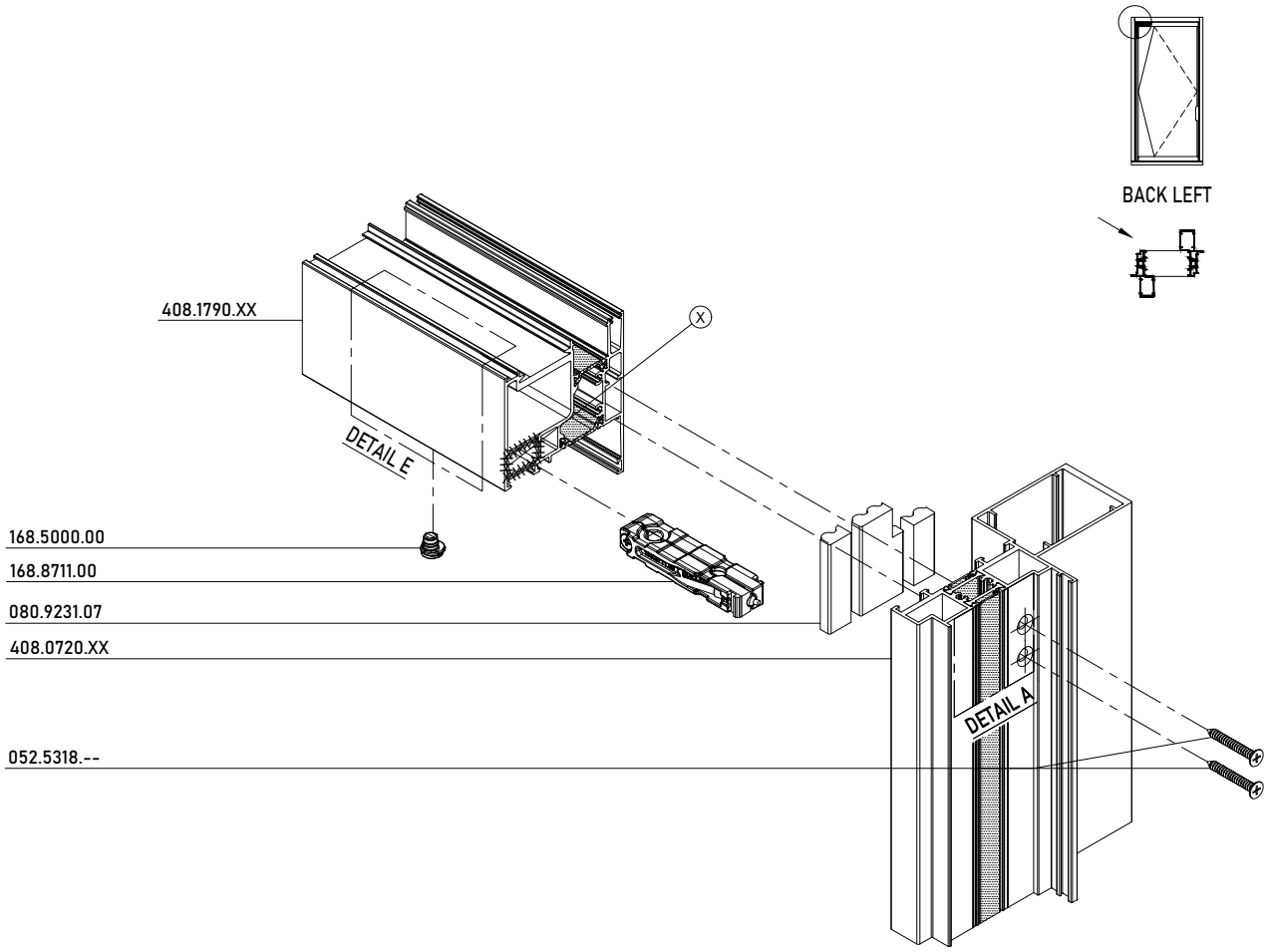

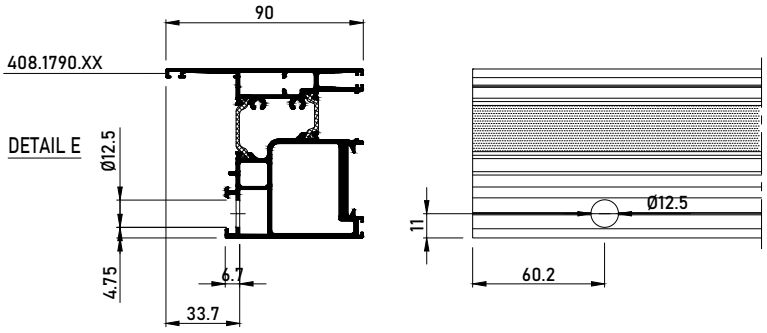

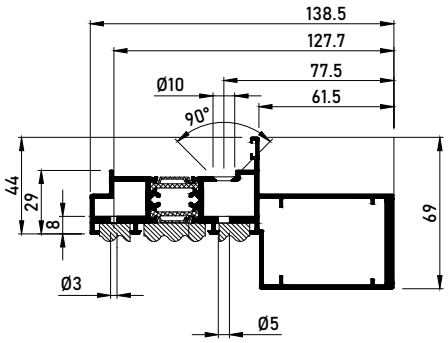

DETAIL A

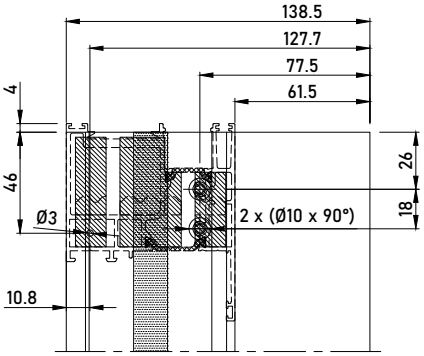

X DICHTINGSMIDDEL
MATIERE D'ETANCHEITE
SEALING AGENT
ABDICHTUNG

BIJKOMENDE INFO VOORBEREIDING/VERWERKING -> ZIE HOOFDSTUK F 'VERWERKINGSVOORSCHRIFTEN' !
INFO COMPLEMENTAIRE PREPARATION/USINAGE -> VOIR CHAPITRE F 'PRESCRIPTIONS DE MISE EN OEUVRE' !
ADDITIONAL INFO PREPARATION/PROCESSING -> SEE CHAPTER F 'PROCESSING DATA' !
ZUSAETZLICHE INFO VORBEREITUNG/VERARBEITUNG -> SIEHE KAPITEL F 'VERARBEITUNGSVORSCHRIFTEN' !

ASSEMBLY VENT PIVOT DOOR XL

CORNER CONNECTION VENT

MASTERLINE 8-Fu

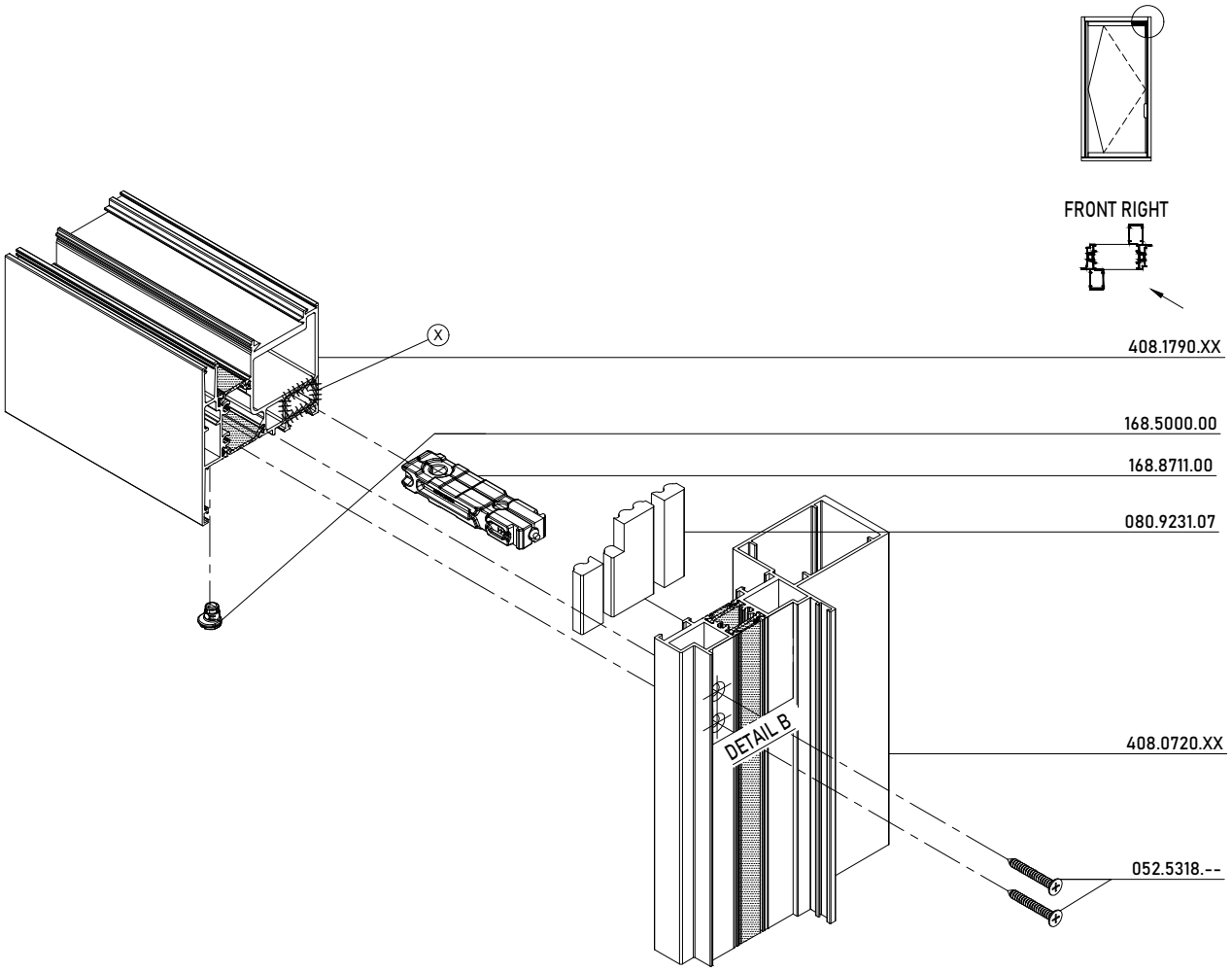

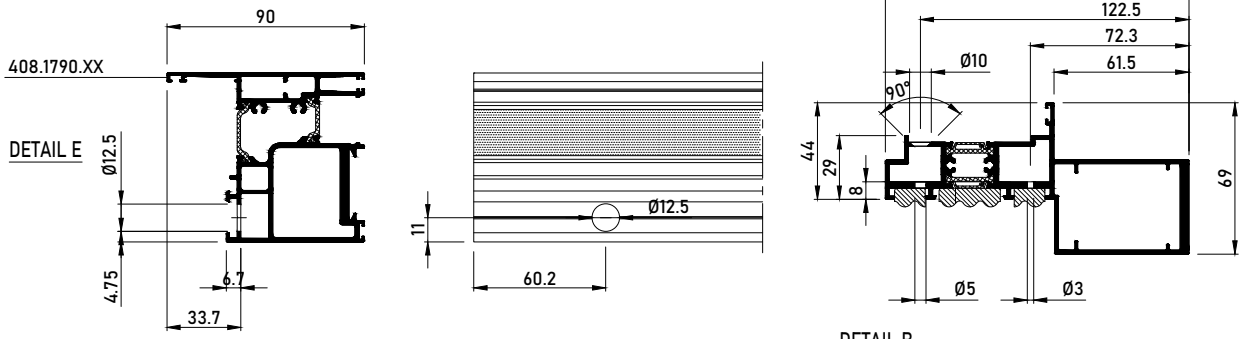

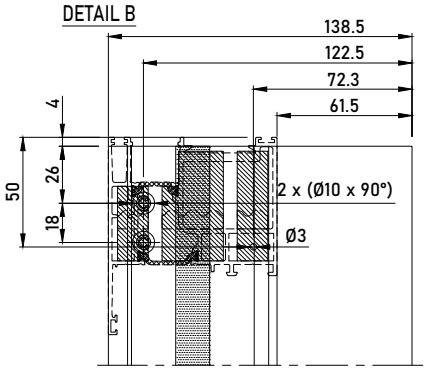

X DICHTINGSMIDDEL
MATIERE D'ETANCHEITE
SEALING AGENT
ABDICHTUNG

BOEKOMENDE INFO VOORBEREIDING/VERWERKING -> ZIE HOOFDSTUK F 'VERWERKINGSVOORSCHRIFTEN' !
INFO COMPLEMENTAIRE PREPARATION/USINAGE -> VOIR CHAPITRE F 'PRESCRIPTIONS DE MISE EN OEUVRE' !
ADDITIONAL INFO PREPARATION/PROCESSING -> SEE CHAPTER F 'PROCESSING DATA' !
ZUSAETZLICHE INFO VORBEREITUNG/VERARBEITUNG -> SIEHE KAPITEL F 'VERARBEITUNGSVORSCHRIFTEN' !

ASSEMBLY VENT PIVOT DOOR XL

ASSEMBLY VENT | 408.1790.XX

MASTERLINE 8-Fu

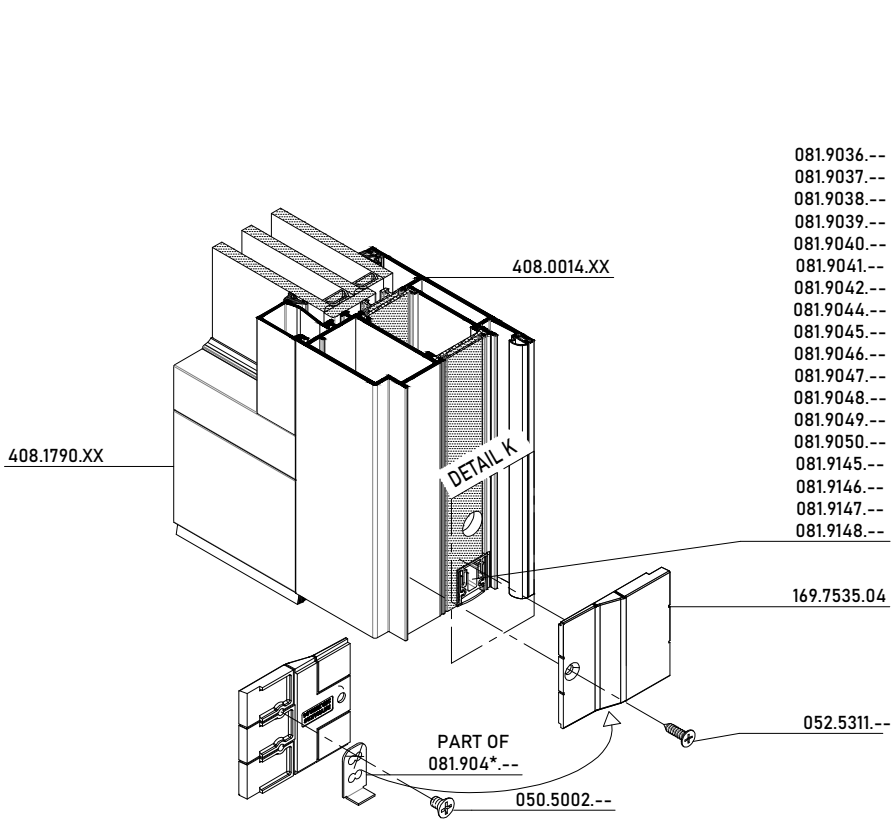

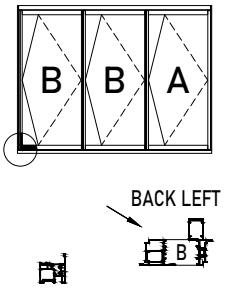

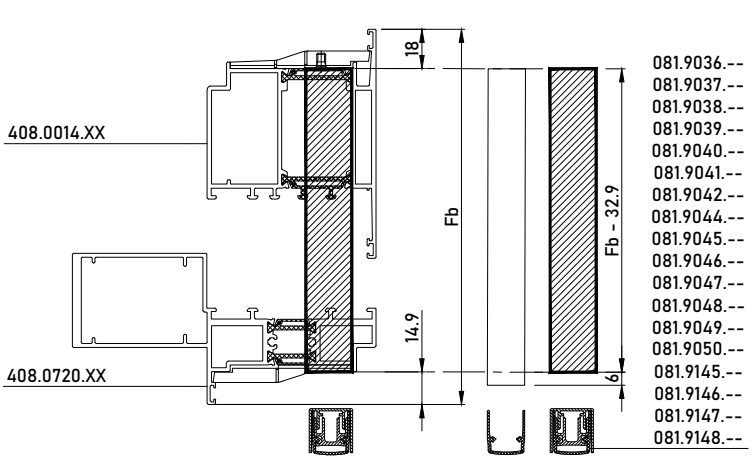

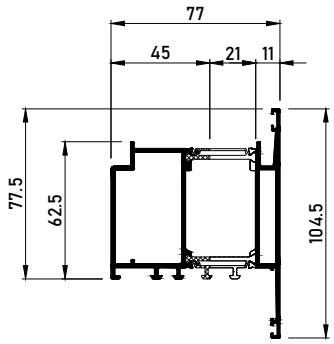

DETAIL K

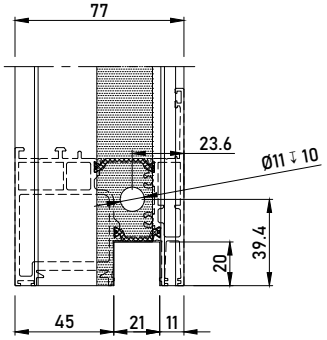

081.9036.--	L = 460mm
081.9037.--	L = 585mm
081.9038.--	L = 710mm
081.9039.--	L = 835mm
081.9040.--	L = 960mm
081.9042.--	L = 1085mm
081.9041.--	L = 1210mm
081.9050.--	L = 1335mm
081.9044.--	L = 1460mm
081.9045.--	L = 1585mm
081.9145.--	L = 1625mm
081.9046.--	L = 1750mm

ASSEMBLY VENT PIVOT DOOR XL

ASSEMBLY VENT | 408.1790.XX

MASTERLINE 8-Fu

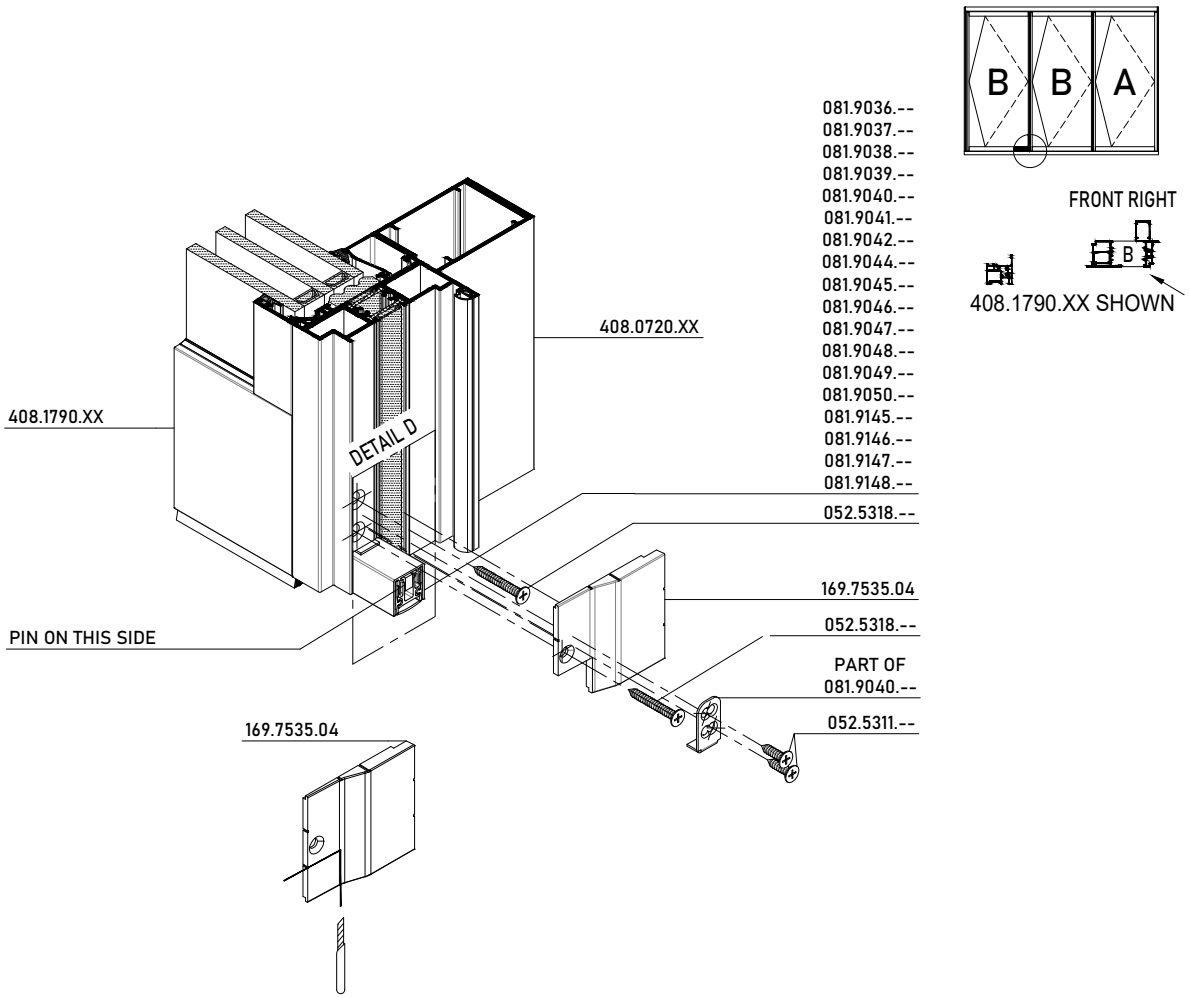

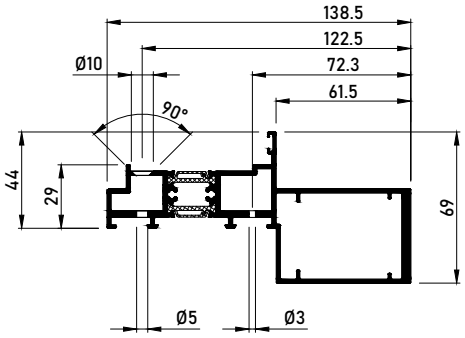

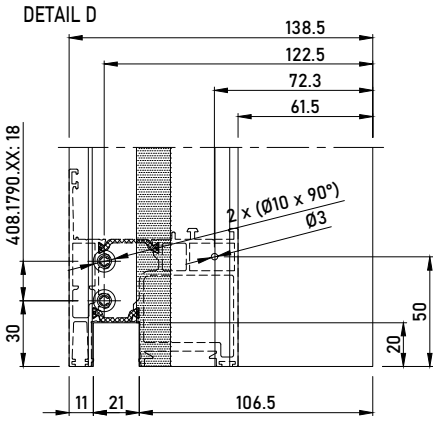

BALCONY DOOR AUTOMATIC SEALING OUTWARD OPENING 2024

BOTTOM CONNECTION - ADA

MASTERLINE 8-Fu

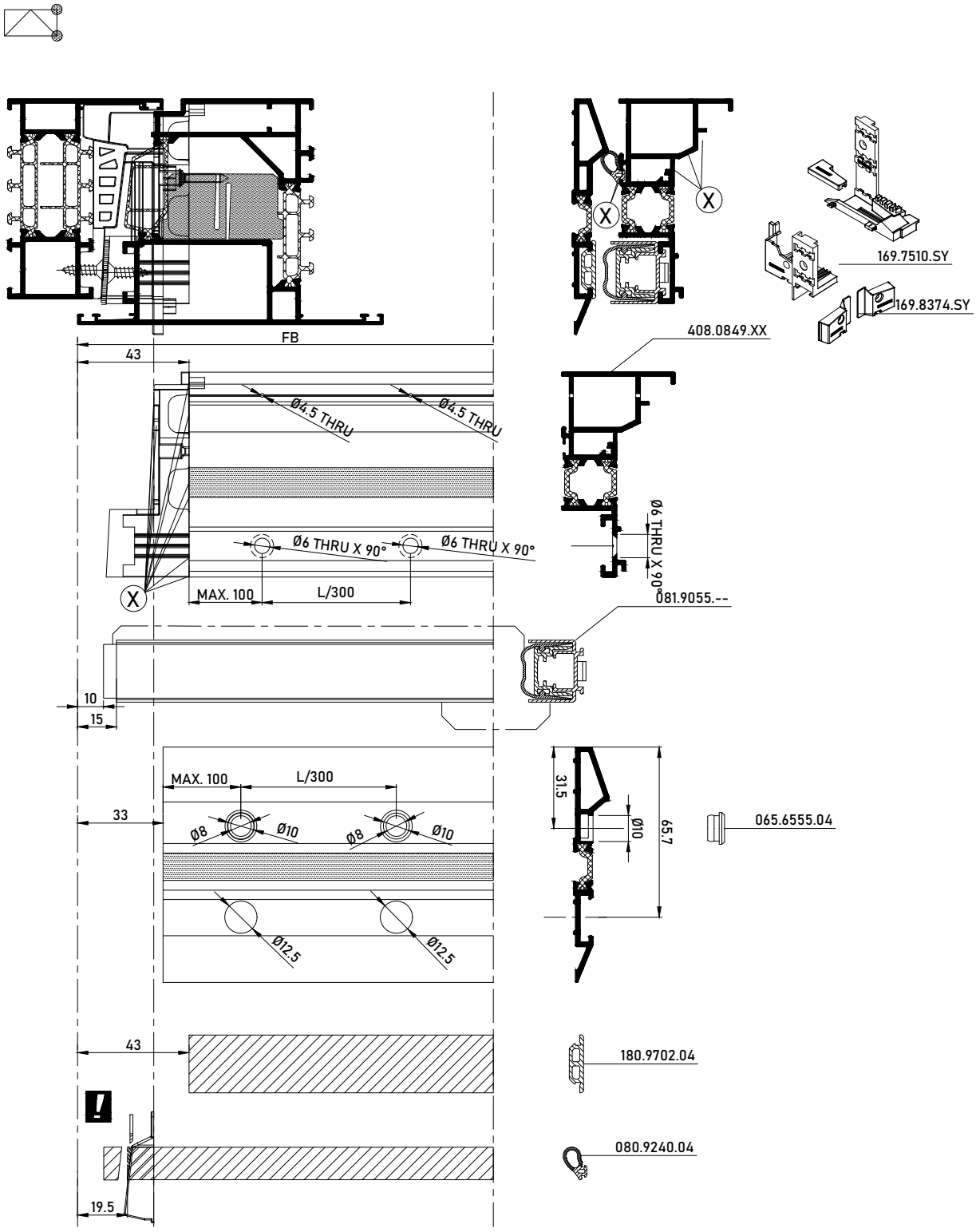

BALCONY DOOR WEATHER STRIP

BALCONY DOOR SINGLE INWARD OPENING

MASTERLINE 8-Fu

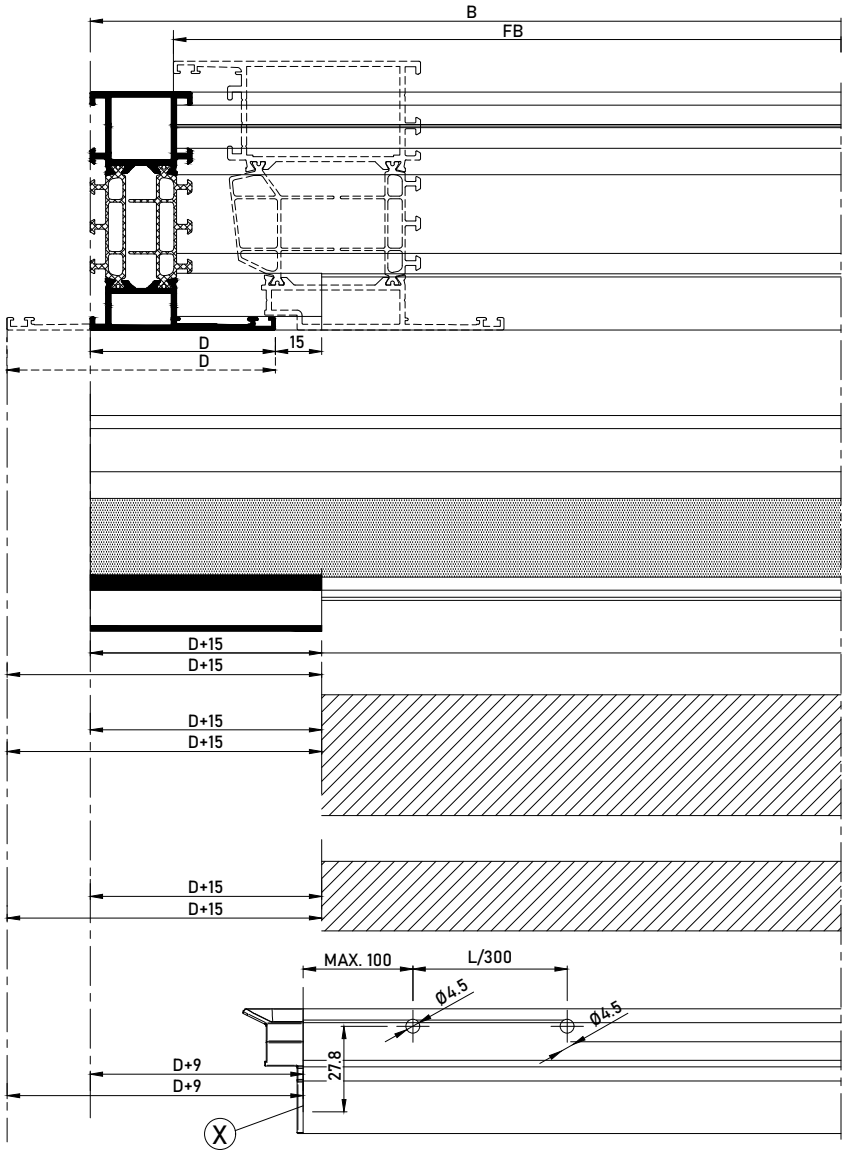

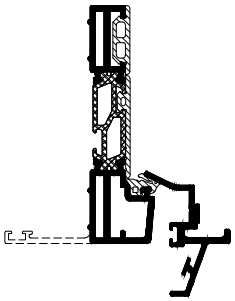

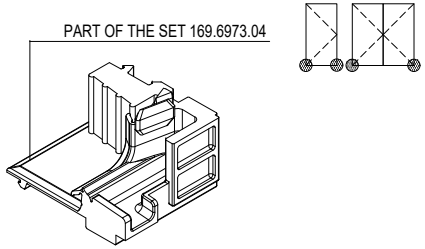

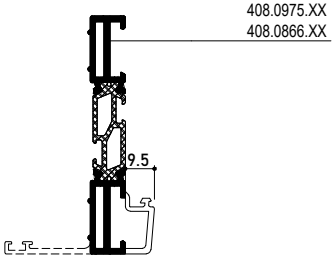

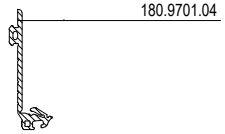

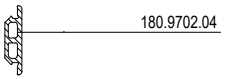

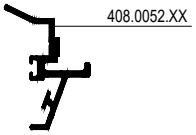

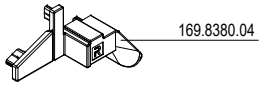

BALCONY DOOR WEATHER STRIP

BALCONY DOOR SINGLE INWARD OPENING

MASTERLINE 8-Fu

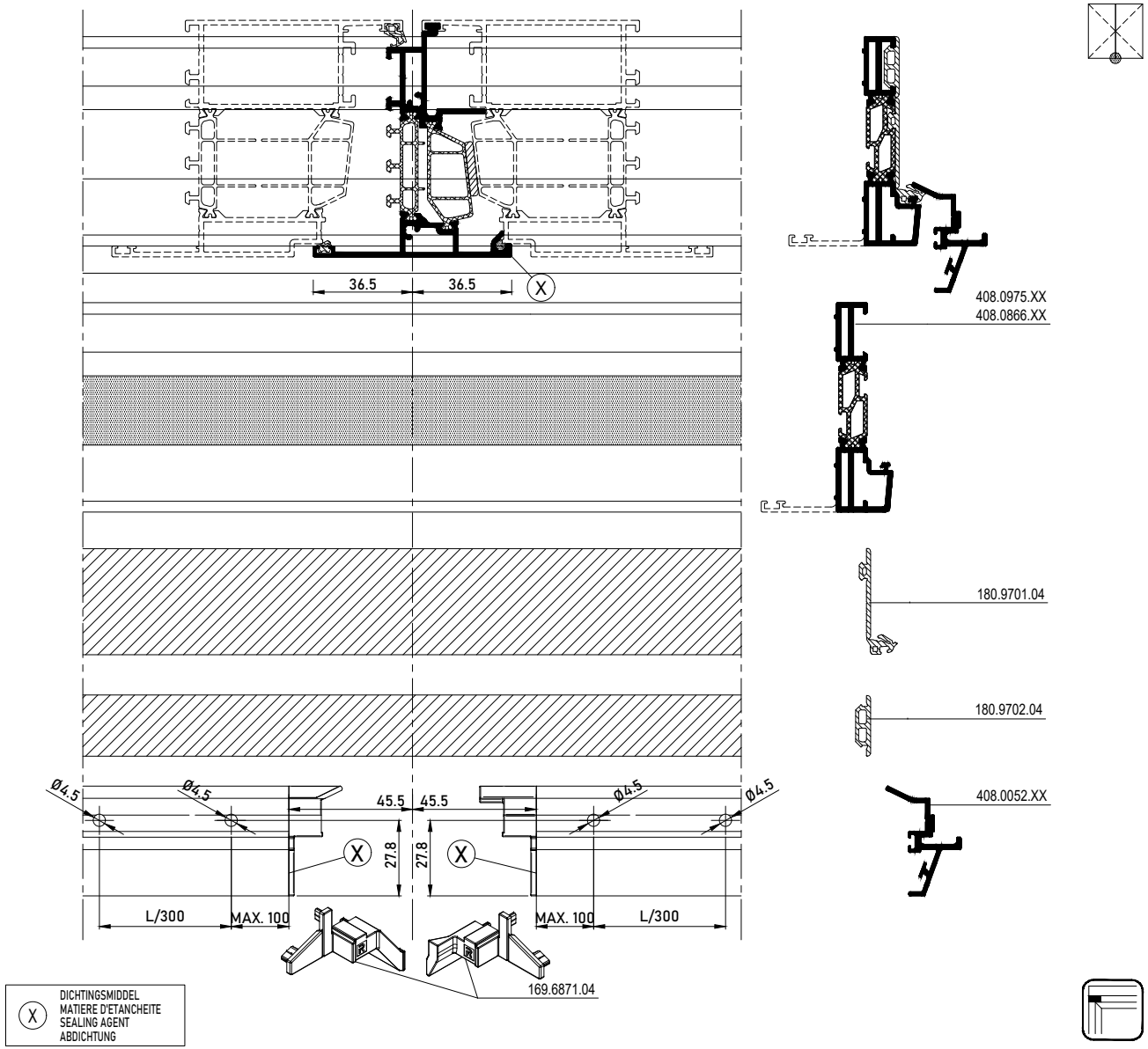

BALCONY DOOR WEATHER STRIP

BALCONY DOOR SINGLE INWARD OPENING

MASTERLINE 8-Fu

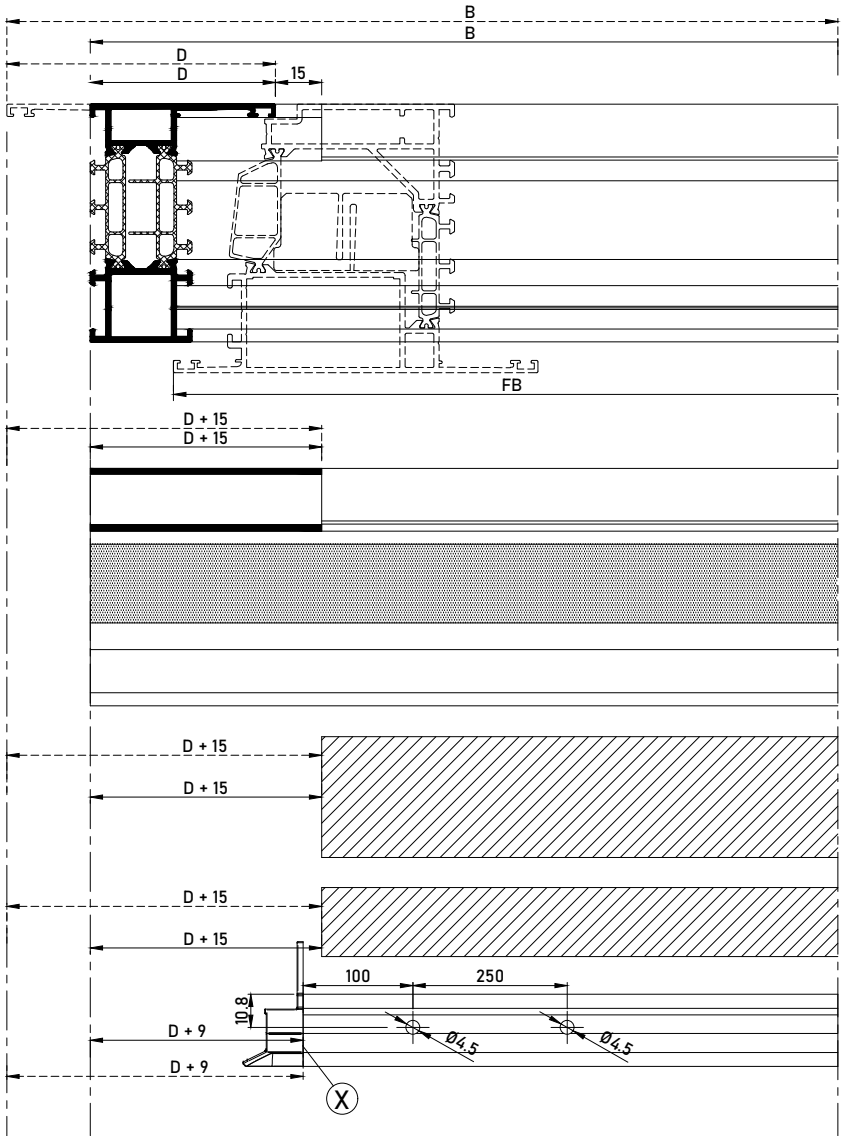

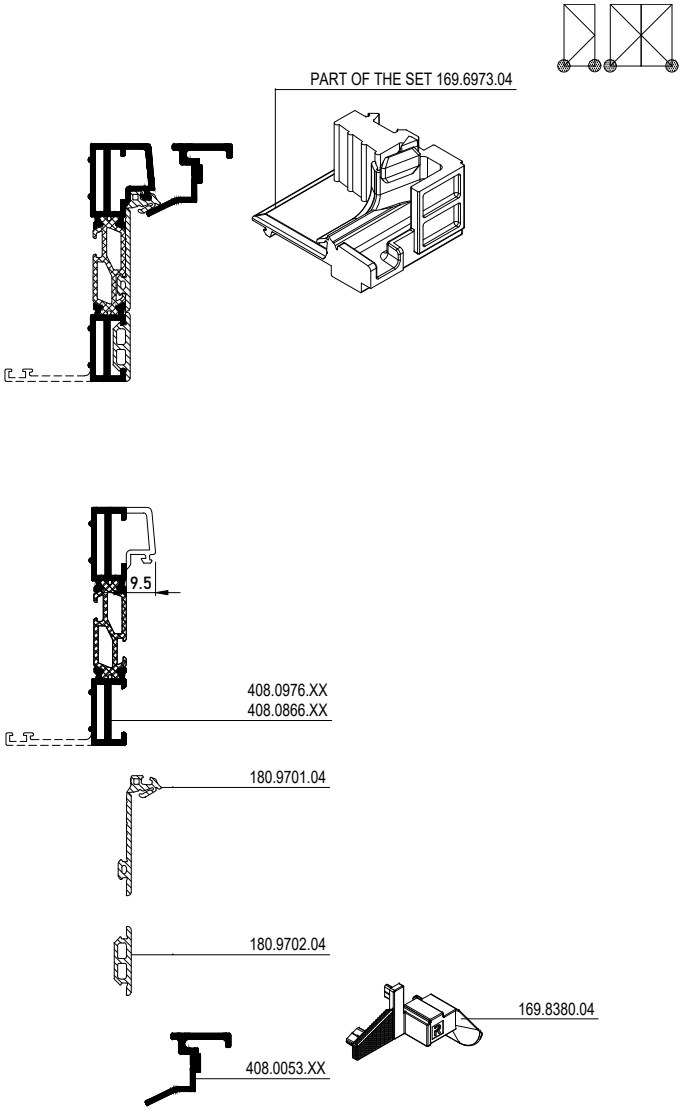

BALCONY DOOR WEATHER STRIP

BALCONY DOOR SINGLE INWARD OPENING

MASTERLINE 8-Fu

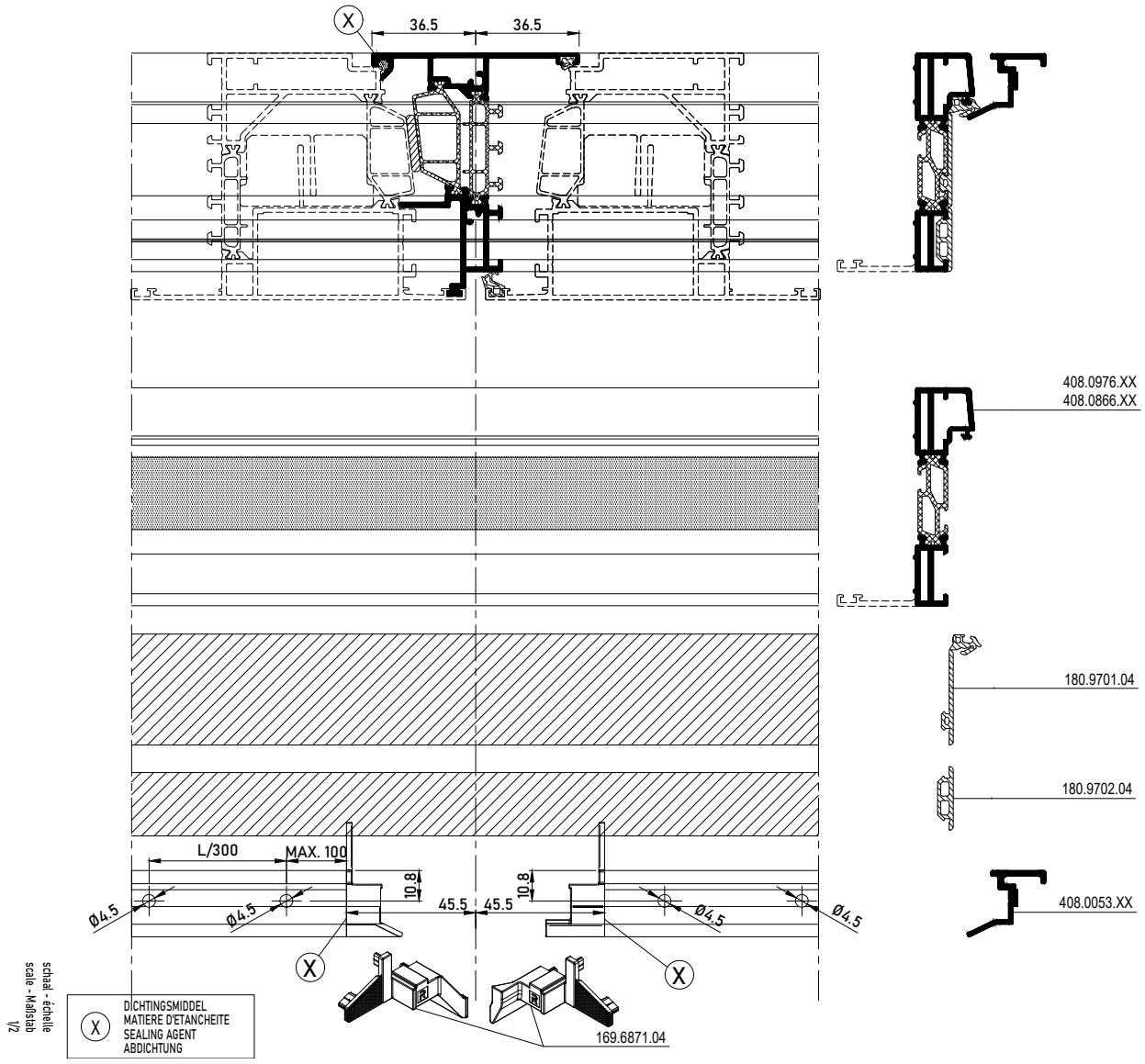



BALCONY DOOR WEATHER STRIP BALCONY DOOR 2024

BALCONY DOOR DOUBLE CASEMENT INWARD OPENING - OPTION A

MASTERLINE 8-Fu

OPTIE A / OPTION A

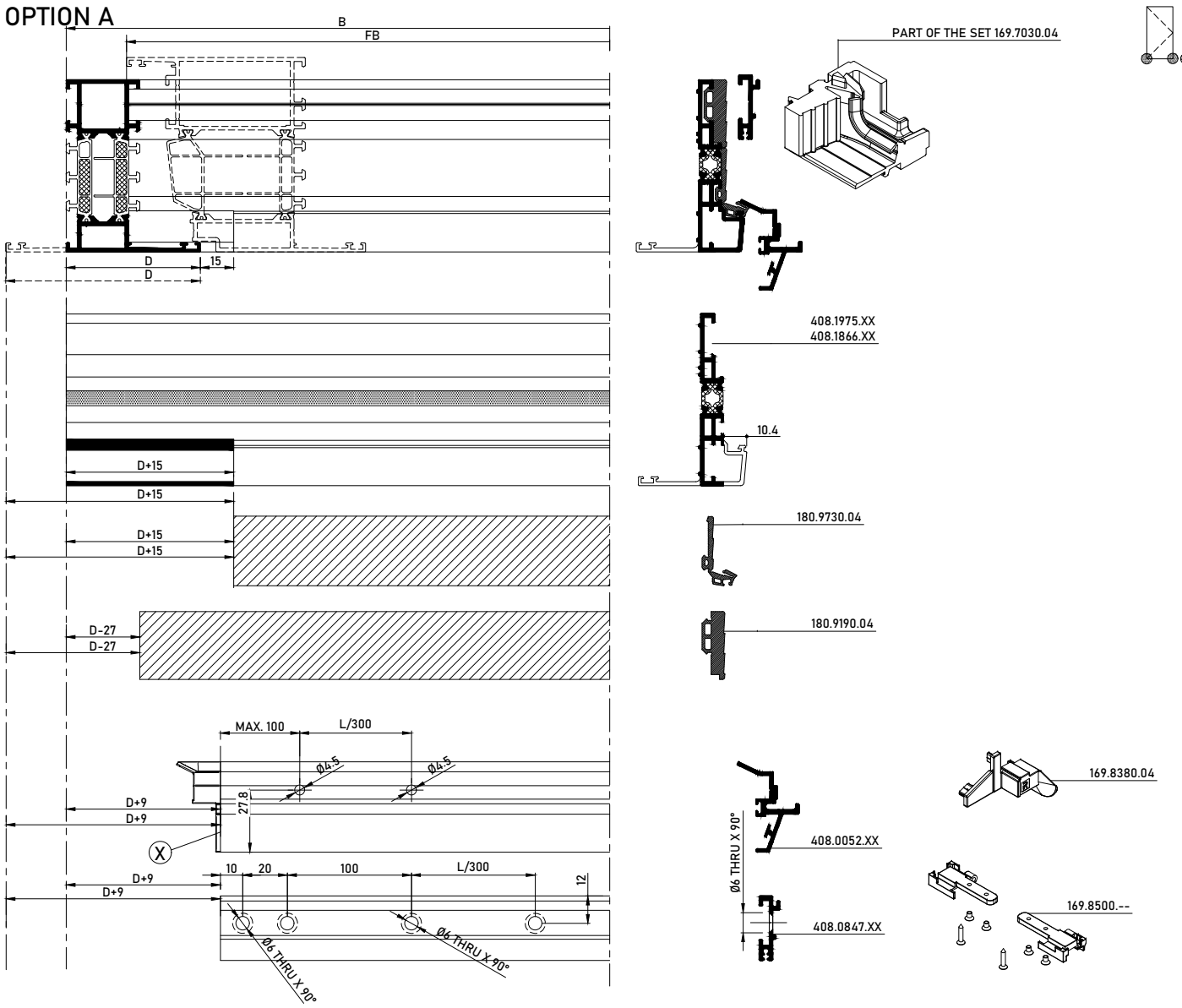

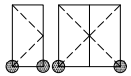

BALCONY DOOR WEATHER STRIP BALCONY DOOR 2024

BALCONY DOOR DOUBLE CASEMENT INWARD OPENING - OPTION A

MASTERLINE 8-Fu

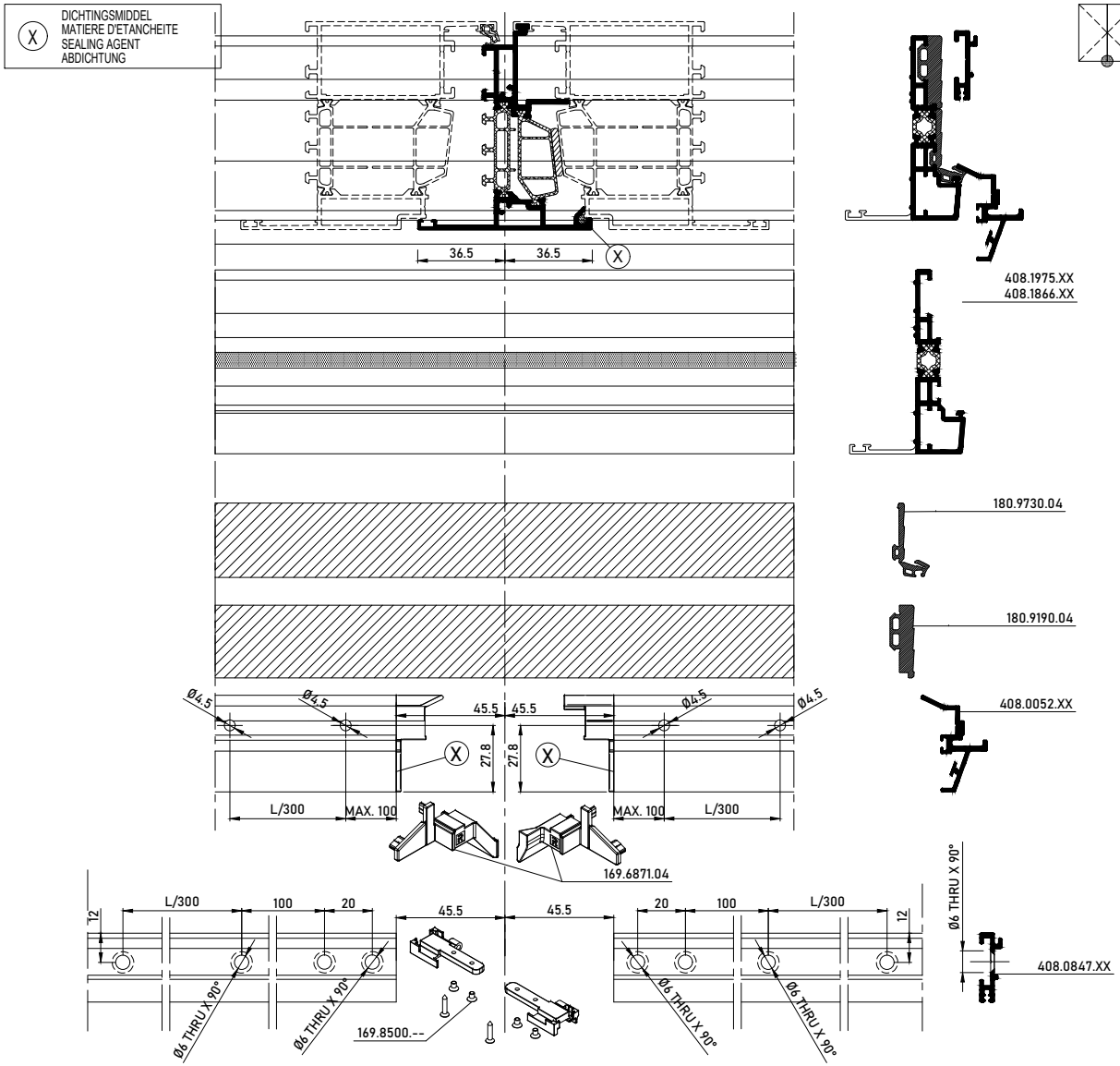

BALCONY DOOR WEATHER STRIP BALCONY DOOR 2024

BALCONY DOOR DOUBLE CASEMENT INWARD OPENING - OPTION A

MASTERLINE 8-Fu

OPTIE B / OPTION B

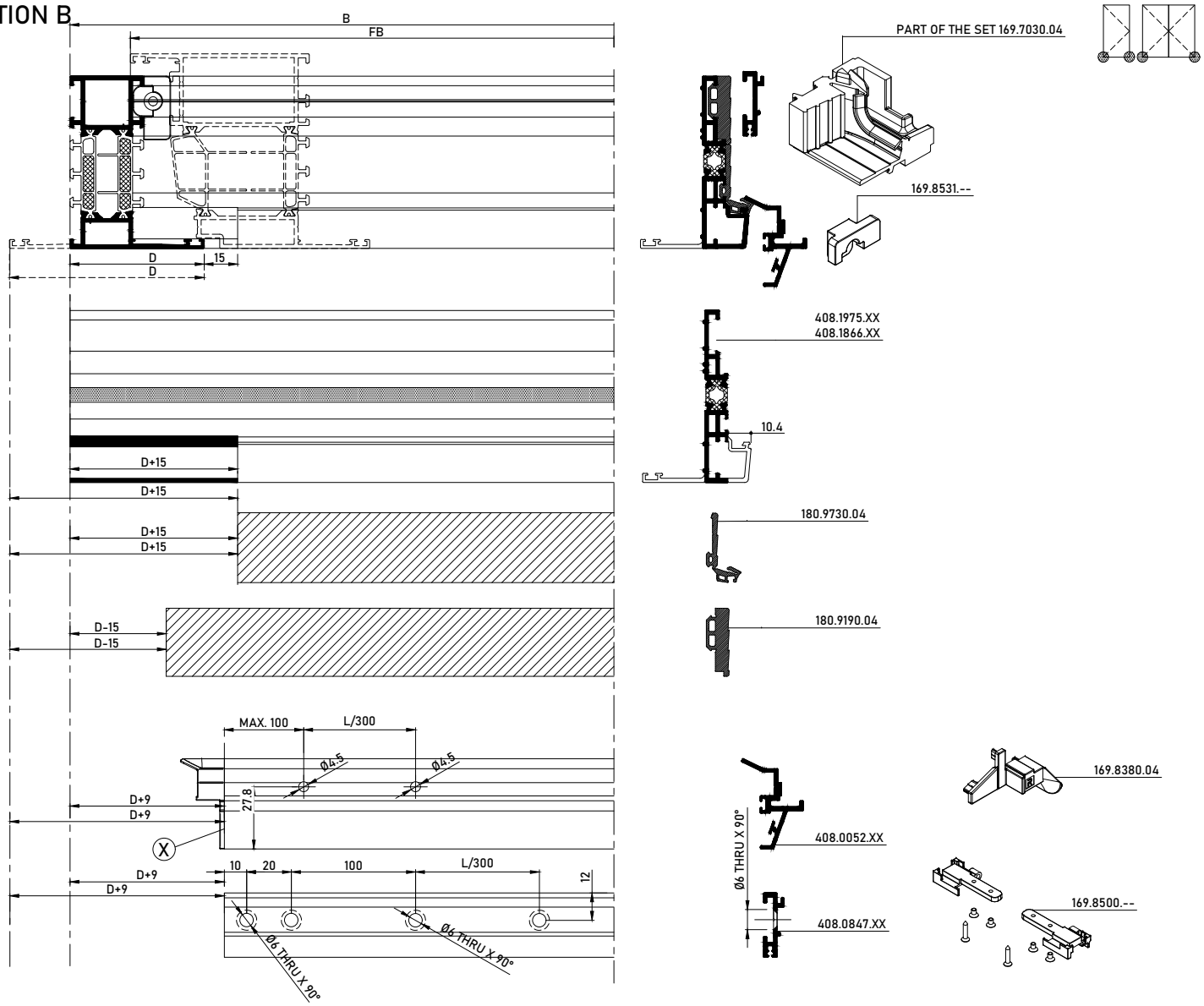

BALCONY DOOR WEATHER STRIP BALCONY DOOR 2024

BALCONY DOOR DOUBLE CASEMENT INWARD OPENING - OPTION A

MASTERLINE 8-Fu

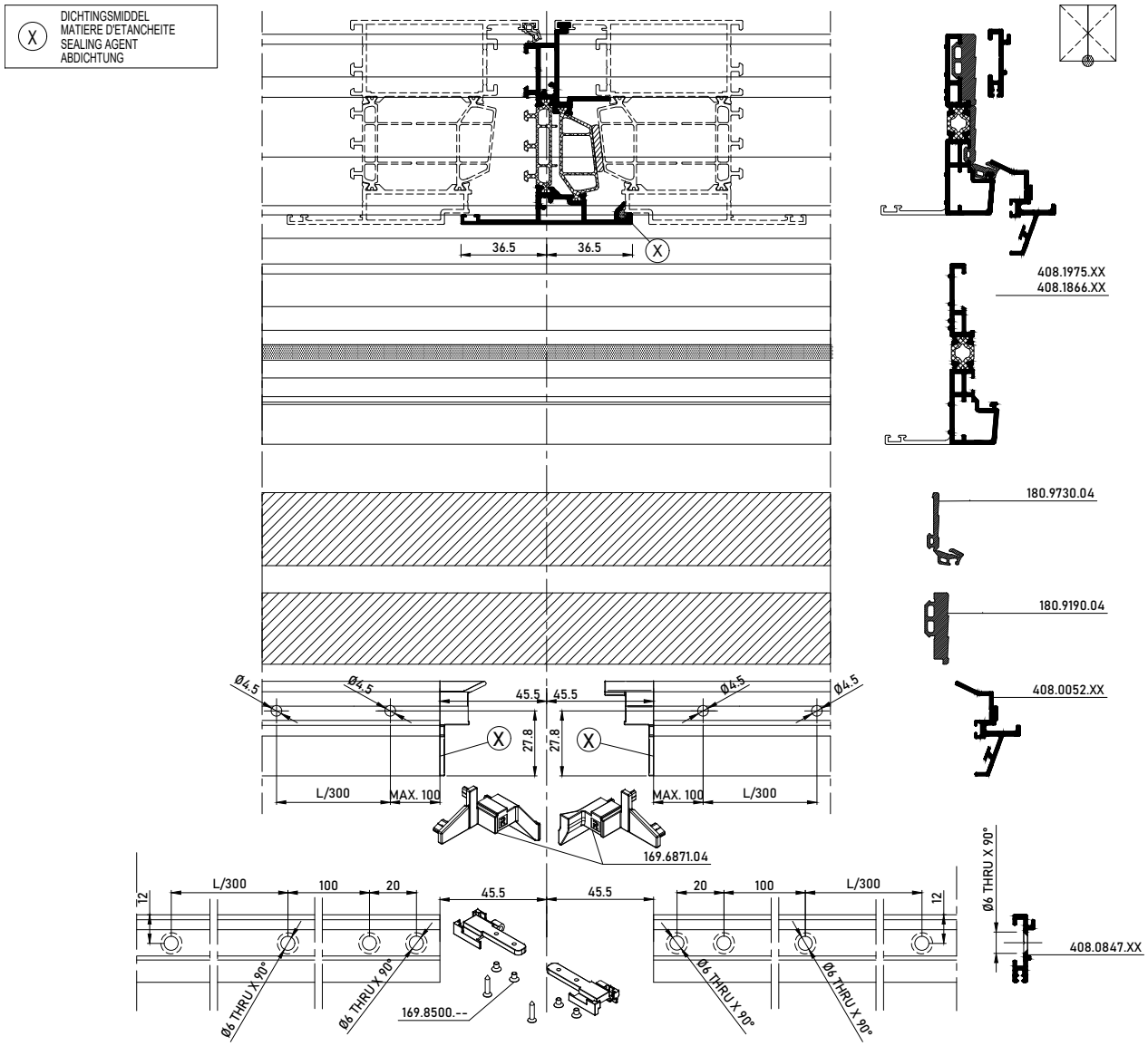

BALCONY DOOR WEATHER STRIP OUTWARD OPENING 2024

BALCONY DOOR DOUBLE OUTWARD OPENING OPTION A

MASTERLINE 8-Fu

OPTIE A / OPTION A

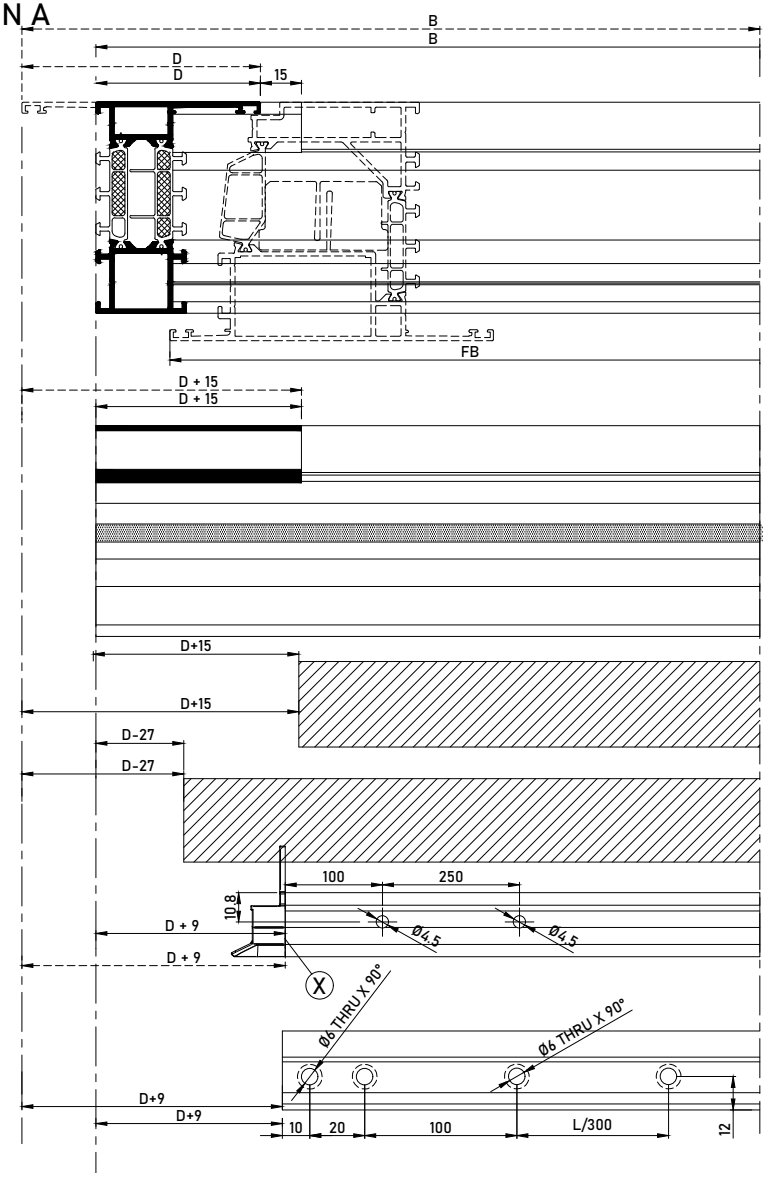

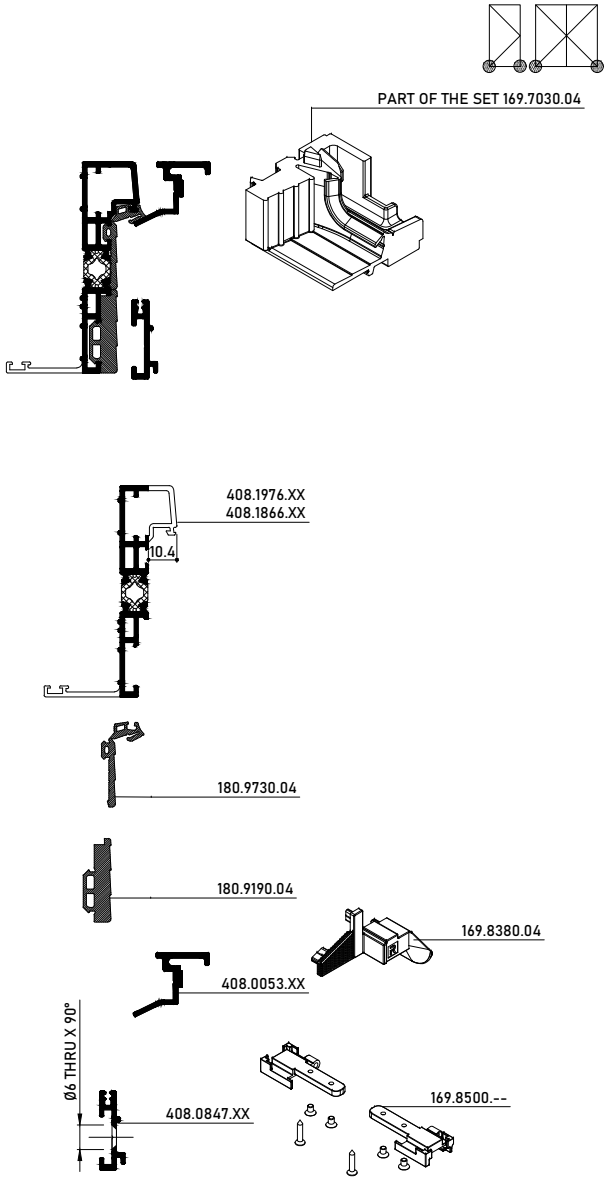

BALCONY DOOR WEATHER STRIP OUTWARD OPENING 2024

BALCONY DOOR DOUBLE OUTWARD OPENING OPTION A

MASTERLINE 8-Fu

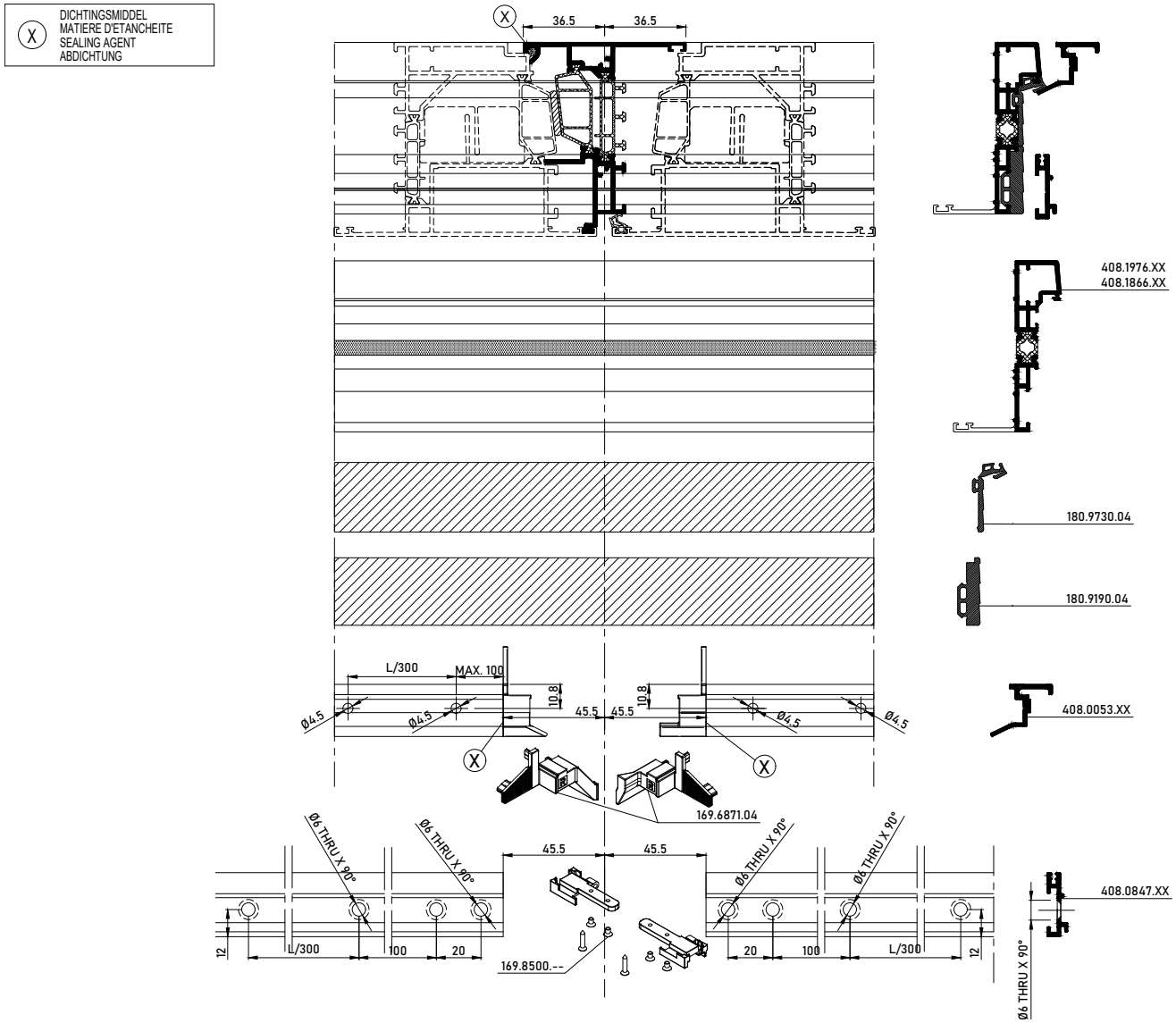

BALCONY DOOR WEATHER STRIP OUTWARD OPENING 2024

BALCONY DOOR DOUBLE OUTWARD OPENING OPTION A

MASTERLINE 8-Fu

OPTIE B / OPTION B

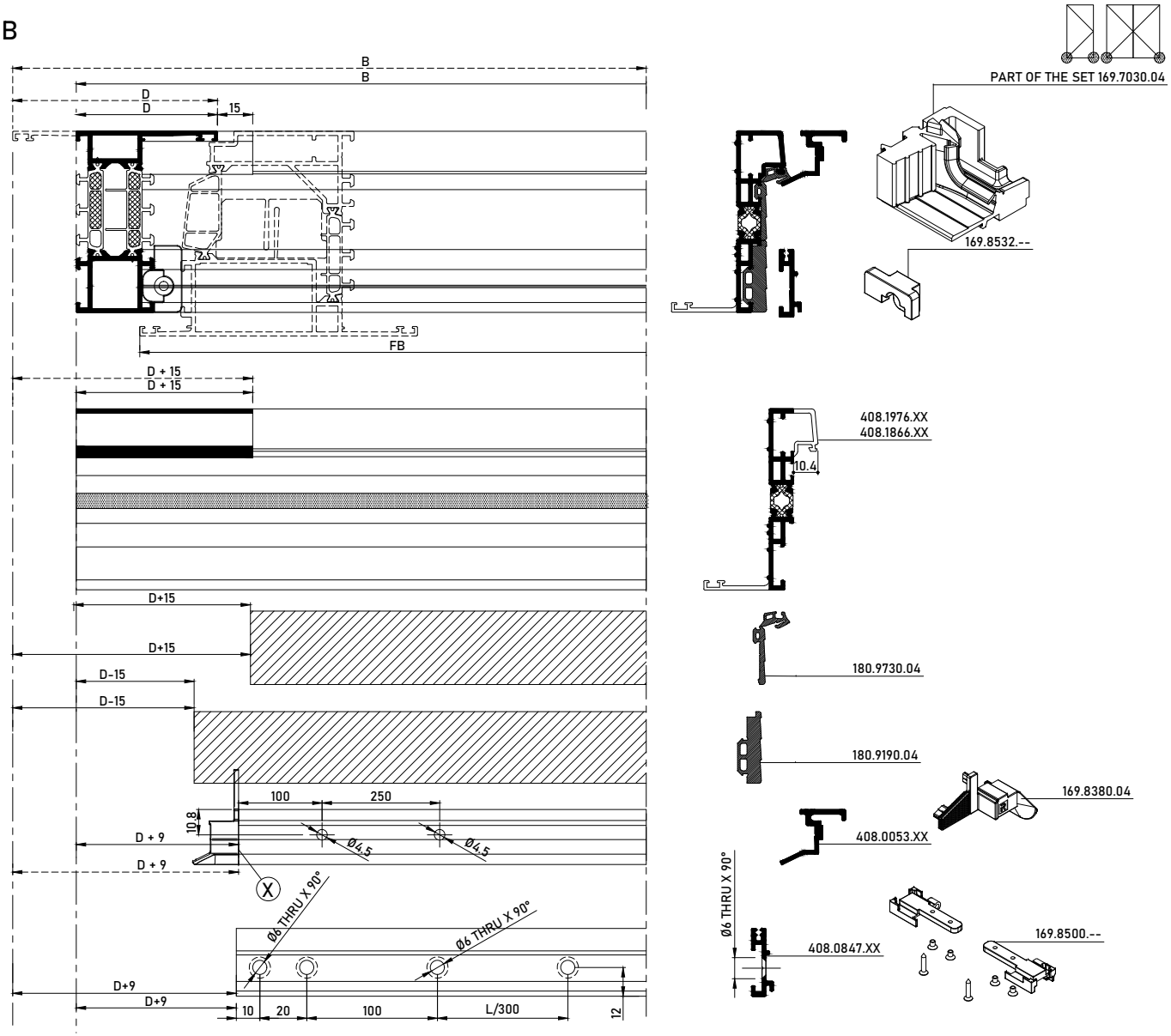

BALCONY DOOR WEATHER STRIP OUTWARD OPENING 2024

BALCONY DOOR DOUBLE OUTWARD OPENING OPTION A

MASTERLINE 8-Fu

X DICHTINGSMIDDEL
MATIERE D'ETANCHEITE
SEALING AGENT
ABDICHTUNG

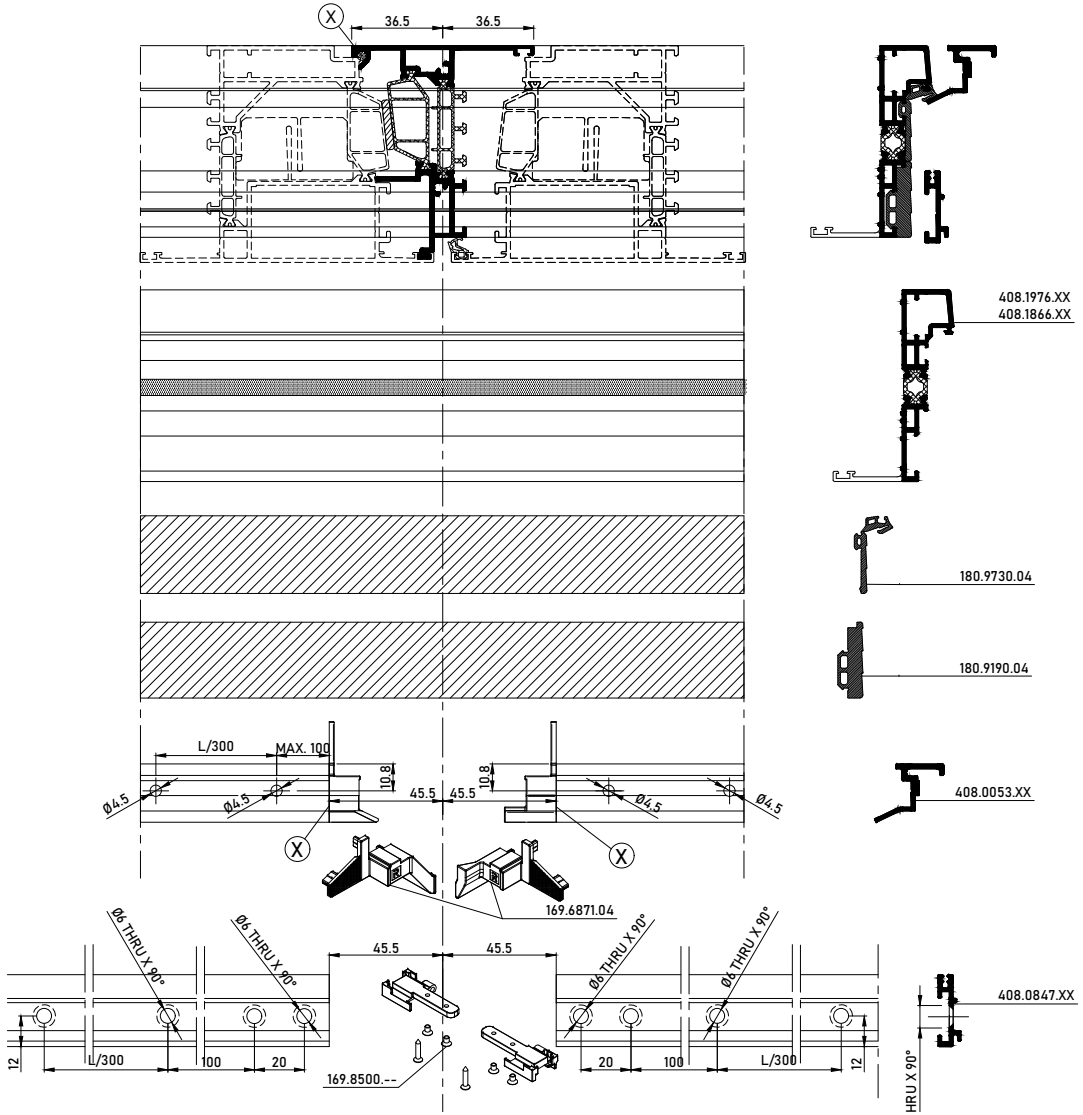

BOTTOM SOLUTION BALCONY DOOR 2024

BOTTOM SECTION BALCONY DOOR

MASTERLINE 8-Fu

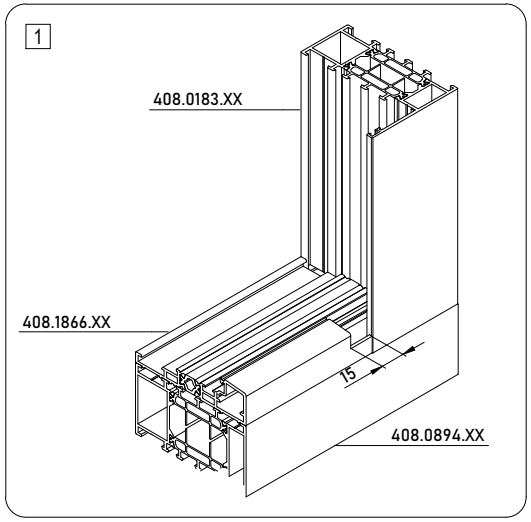

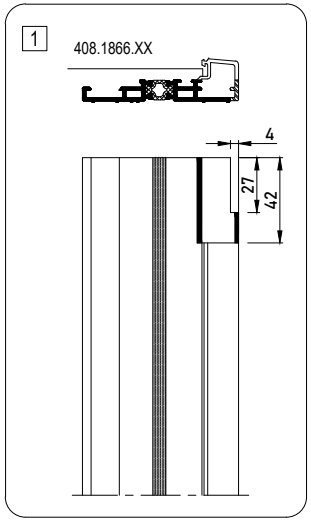

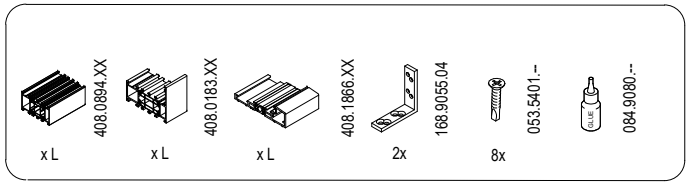

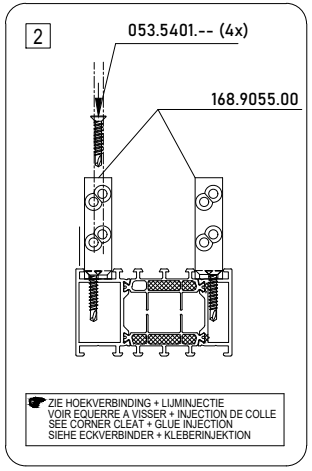

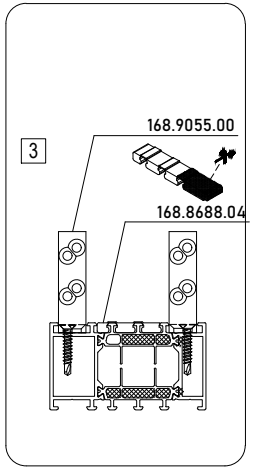

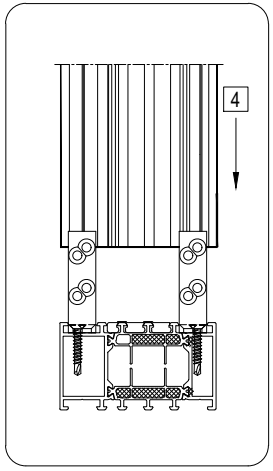

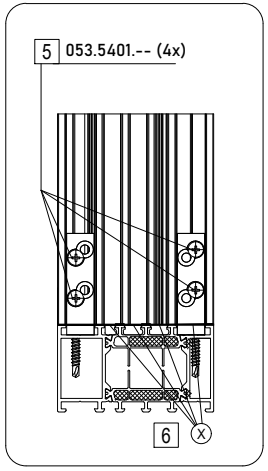

BOTTOM SOLUTION BALCONY DOOR 2024

BOTTOM SECTION BALCONY DOOR

MASTERLINE 8-Fu

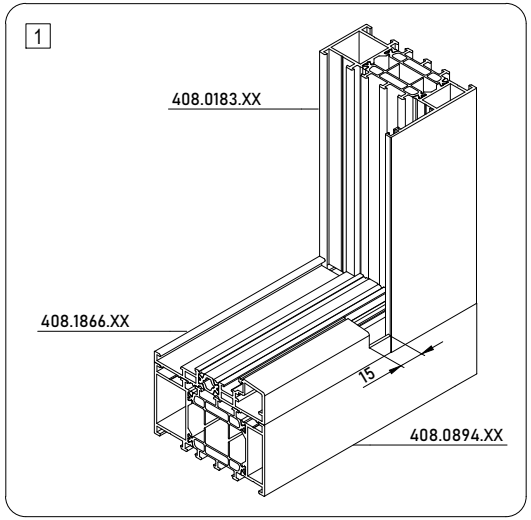

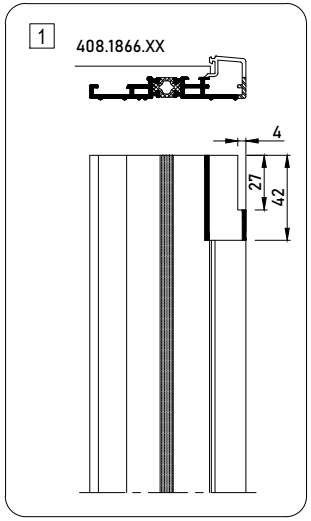

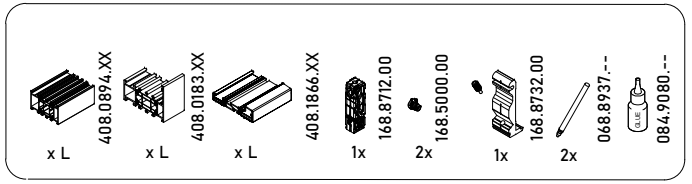

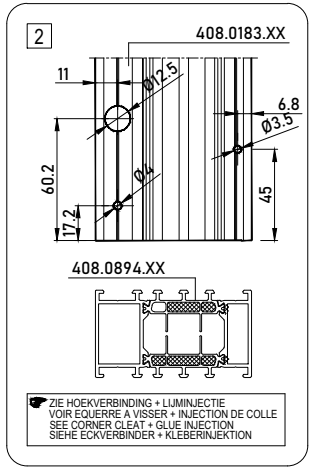

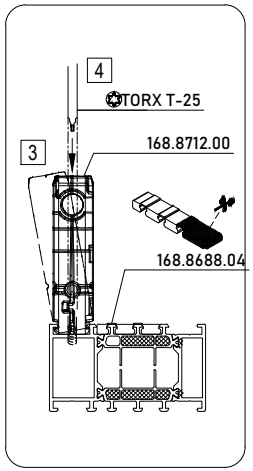

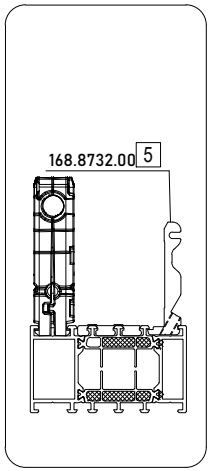

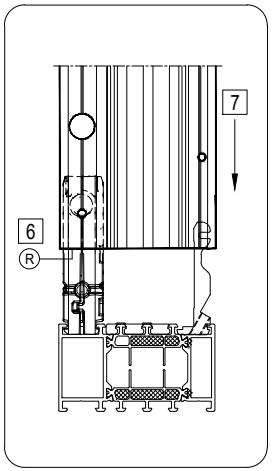

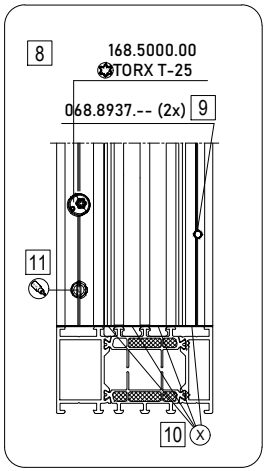

BOTTOM SOLUTION BALCONY DOOR 2024

BOTTOM SECTION BALCONY DOOR

MASTERLINE 8-Fu

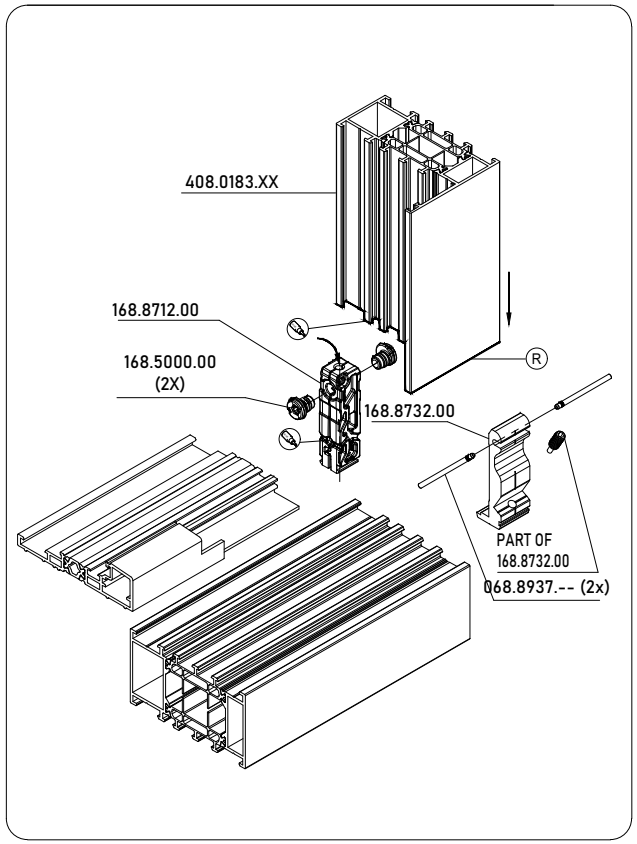

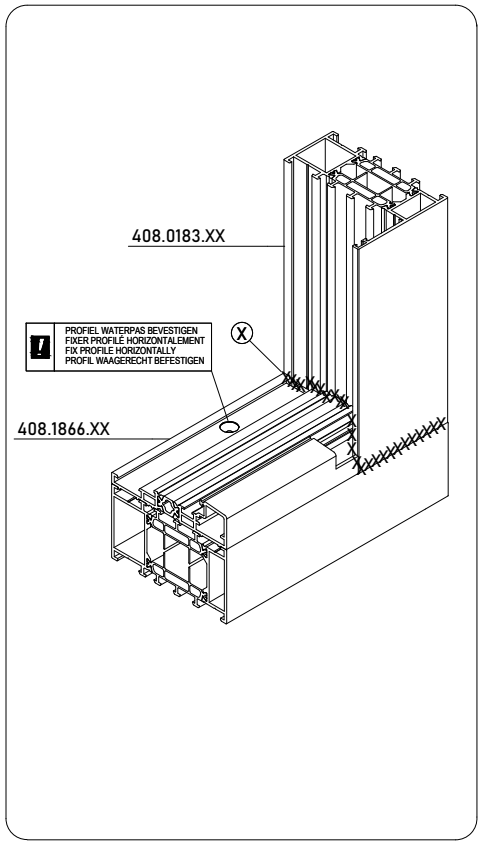

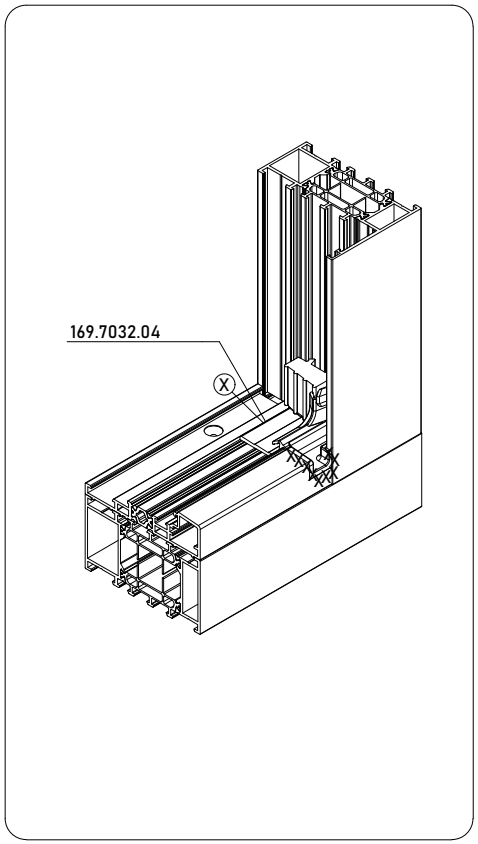

REYNASEAL DUO
REYNASEAL DUO
REYNASEAL DUO
REYNASEAL DUO

R REYNAPROTECTOR
REYNAPROTECTOR
REYNAPROTECTOR
REYNAPROTECTOR

X DICHTINGSMIDDEL
MATIERE D'ETANCHEITE
SEALING AGENT
ABDICHTUNG

MONTAGEVOLGORDE
L 'ORDRE DE MONTAGE
THE ORDER OF ASSEMBLY
MONTAGEREIHENFOLGE
1 2 3 .

BIJKOMENDE INFO VOORBEREIDING/VERWERKING -> ZIE HOOFDSTUK F 'VERWERKINGSVOORSCHRIFTEN' !
INFO COMPLEMENTAIRE PREPARATION/USINAGE -> VOIR CHAPITRE F 'PRESCRIPTIONS DE MISE EN OEUVRE' !
ADDITIONAL INFO PREPARATION/PROCESSING -> SEE CHAPTER F 'PROCESSING DATA' !
ZUSAETZLICHE INFO VORBEREITUNG/VERARBEITUNG -> SIEHE KAPITEL F 'VERARBEITUNGSVORSCHRIFTEN' !

BOTTOM SOLUTION BALCONY DOOR 2024

BOTTOM SECTION BALCONY DOOR

MASTERLINE 8-Fu

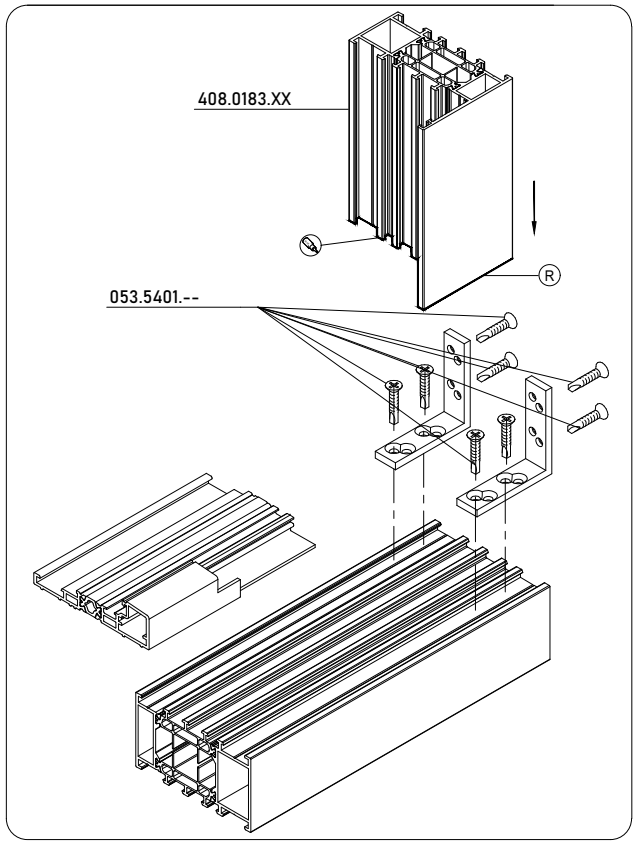

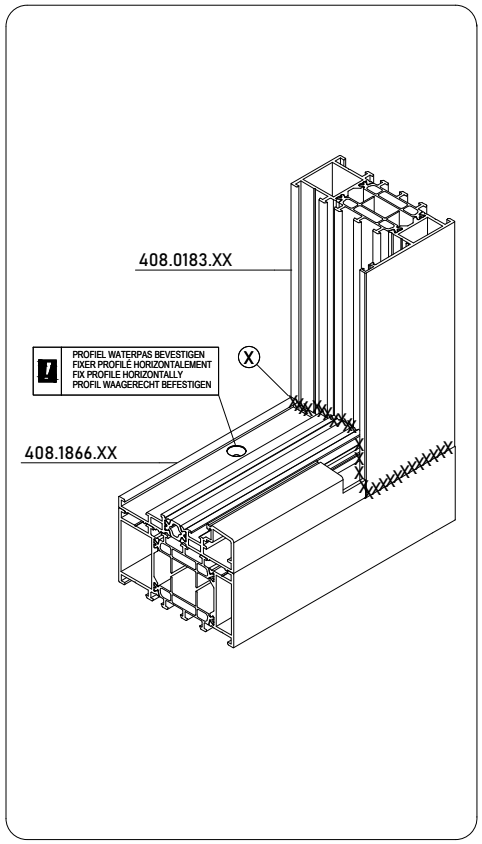

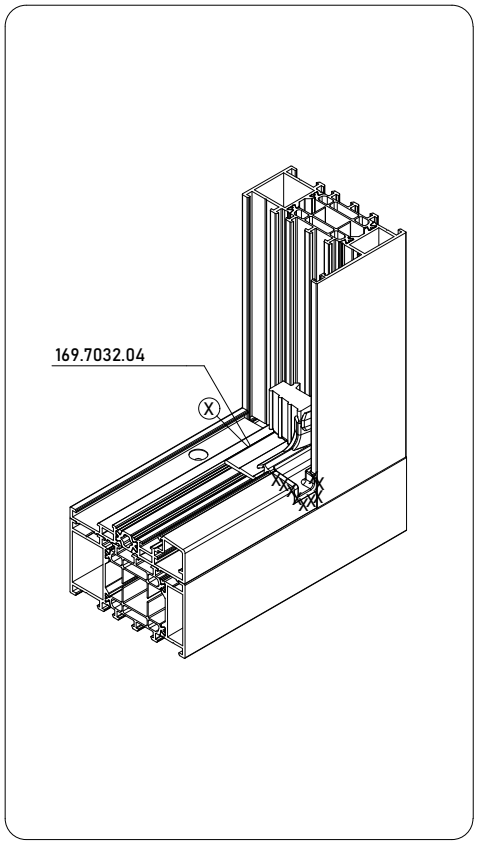

REYNASEAL DUO REYNASEAL DUO REYNASEAL DUO REYNASEAL DUO	R REYNAPROTECTOR REYNAPROTECTOR REYNAPROTECTOR REYNAPROTECTOR	X DICHTINGSMIDDEL MATIERE D'ETANCHEITE SEALING AGENT ABDICHTUNG

MONTAGEVOLGORDE
L 'ORDRE DE MONTAGE
THE ORDER OF ASSEMBLY
MONTAGEREIHENFOLGE
1 2 3 .

BIJKOMENDE INFO VOORBEREIDING/VERWERKING -> ZIE HOOFDSTUK F 'VERWERKINGSVOORSCHRIFTEN' !
INFO COMPLEMENTAIRE PREPARATION/USINAGE -> VOIR CHAPITRE F 'PRESCRIPTIONS DE MISE EN OEUVRE' !
ADDITIONAL INFO PREPARATION/PROCESSING -> SEE CHAPTER F 'PROCESSING DATA' !
ZUSAETZLICHE INFO VORBEREITUNG/VERARBEITUNG -> SIEHE KAPITEL F 'VERARBEITUNGSVORSCHRIFTEN' !

BOTTOM SOLUTION BALCONY DOOR 2024

BOTTOM SECTION BALCONY DOOR - HIDDEN VENT

MASTERLINE 8-Fu

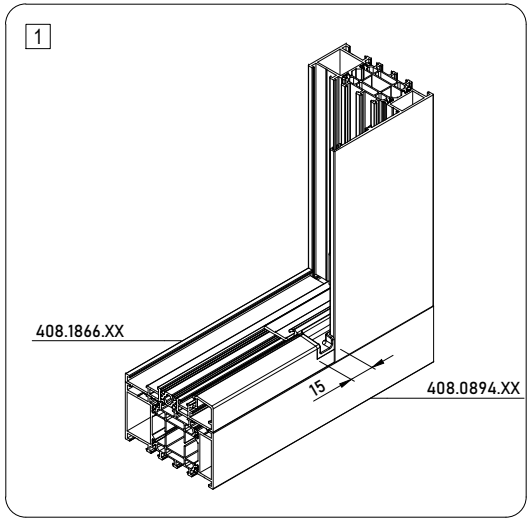

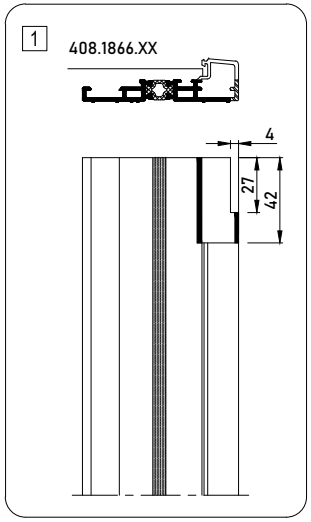

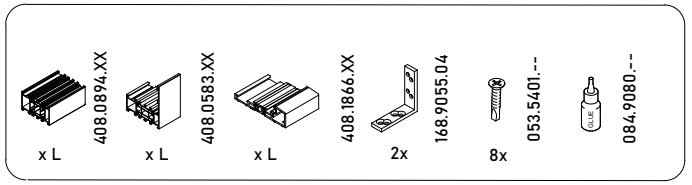

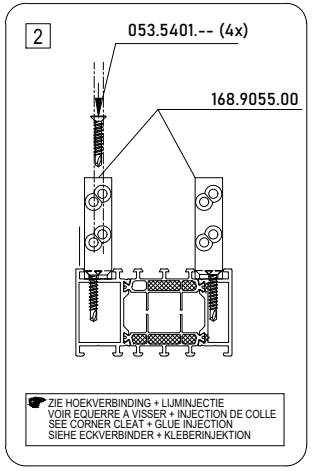

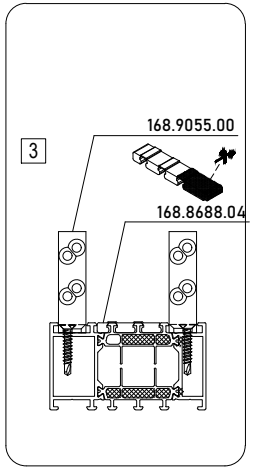

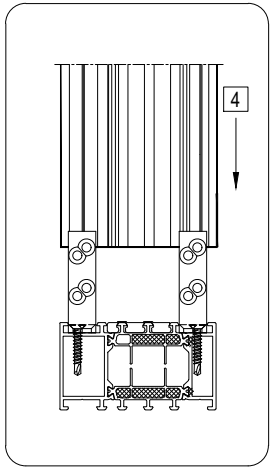

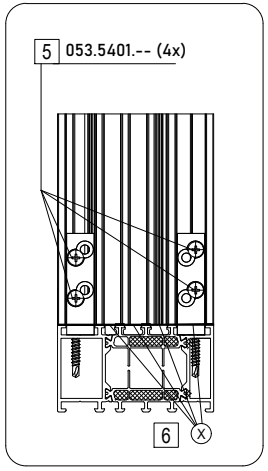

BOTTOM SOLUTION BALCONY DOOR 2024

BOTTOM SECTION BALCONY DOOR - HIDDEN VENT

MASTERLINE 8-Fu

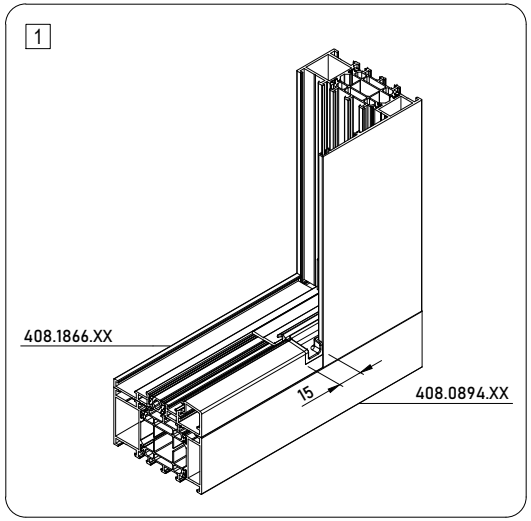

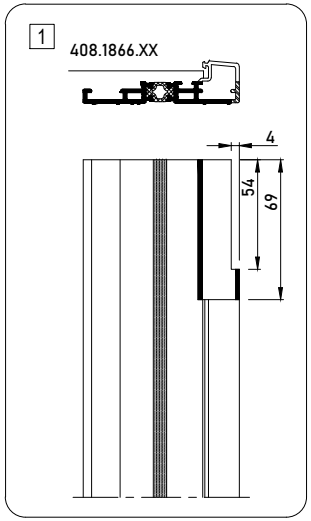

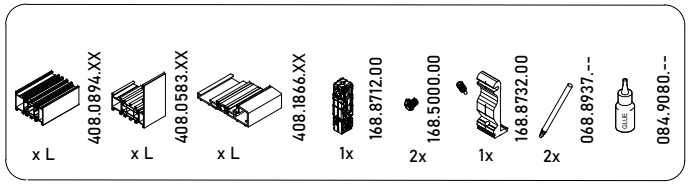

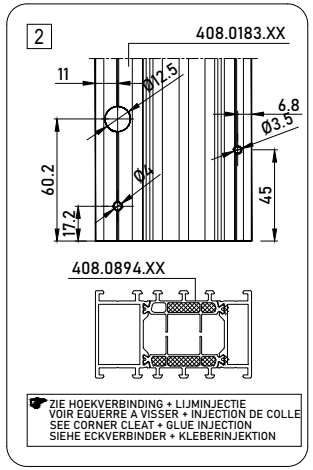

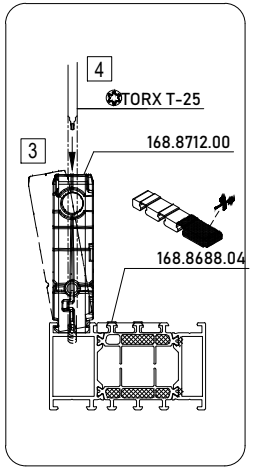

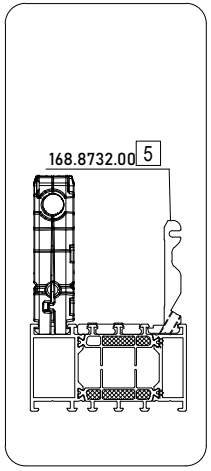

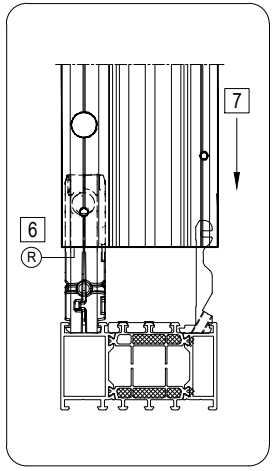

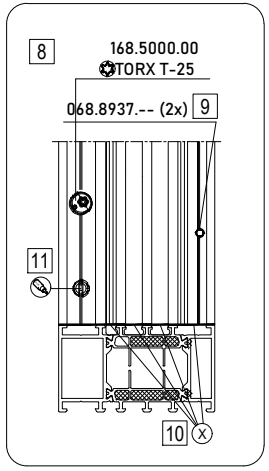

BOTTOM SOLUTION BALCONY DOOR 2024

BOTTOM SECTION BALCONY DOOR - HIDDEN VENT

MASTERLINE 8-Fu

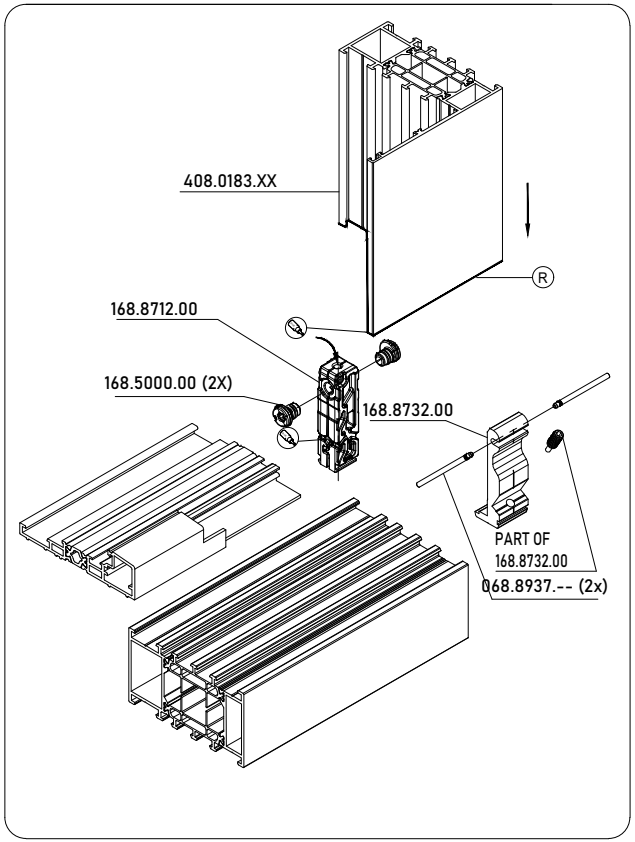

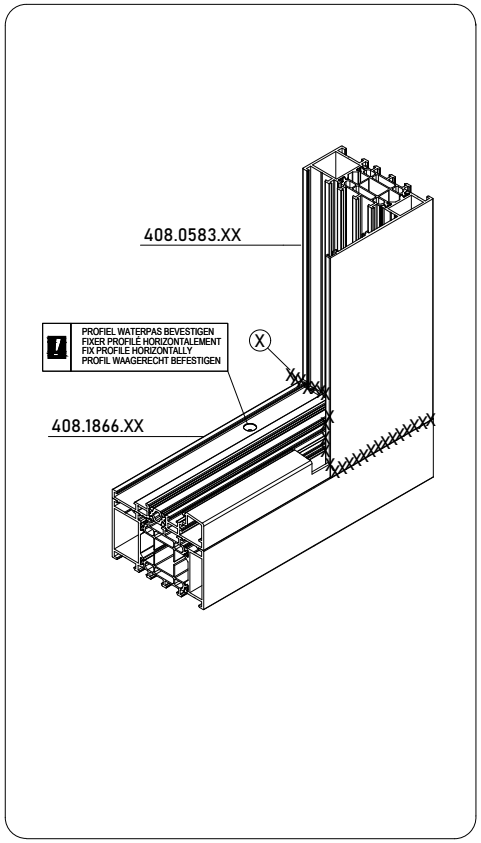

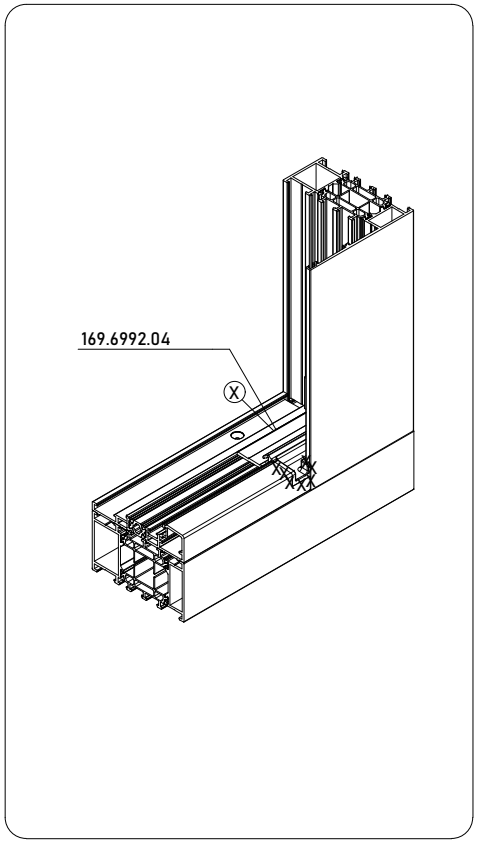

REYNASEAL DUO REYNASEAL DUO REYNASEAL DUO REYNASEAL DUO	REYNAPROTECTOR REYNAPROTECTOR REYNAPROTECTOR REYNAPROTECTOR	DICHTINGSMIDDEL MATIERE D'ETANCHEITE SEALING AGENT ABDICHTUNG

MONTAGEVOLGORDE
L 'ORDRE DE MONTAGE
THE ORDER OF ASSEMBLY
MONTAGEREIHENFOLGE
1 2 3 .

BOKOMENDE INFO VOORBEREIDING/VERWERKING -> ZIE HOOFDSTUK F 'VERWERKINGSVOORSCHRIFTEN' !
INFO COMPLEMENTAIRE PREPARATION/USINAGE -> VOIR CHAPITRE F 'PRESCRIPTIONS DE MISE EN OEUVRE' !
ADDITIONAL INFO PREPARATION/PROCESSING -> SEE CHAPTER F 'PROCESSING DATA' !
ZUSAETZLICHE INFO VORBEREITUNG/VERARBEITUNG -> SIEHE KAPITEL F 'VERARBEITUNGSVORSCHRIFTEN' !

BOTTOM SOLUTION BALCONY DOOR 2024

BOTTOM SECTION BALCONY DOOR - HIDDEN VENT

MASTERLINE 8-Fu

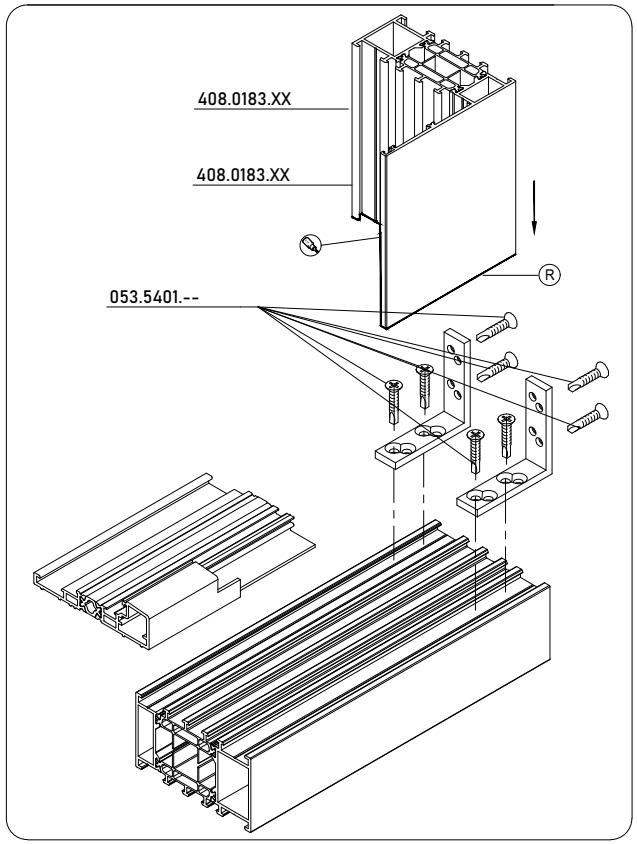

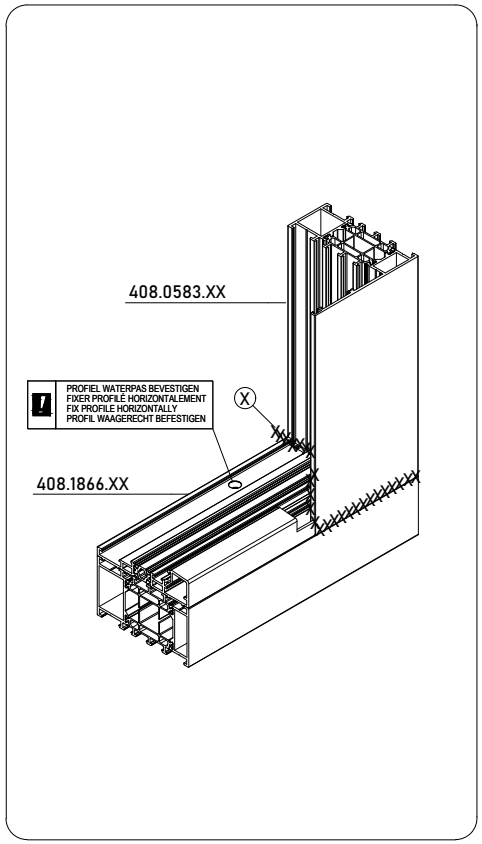

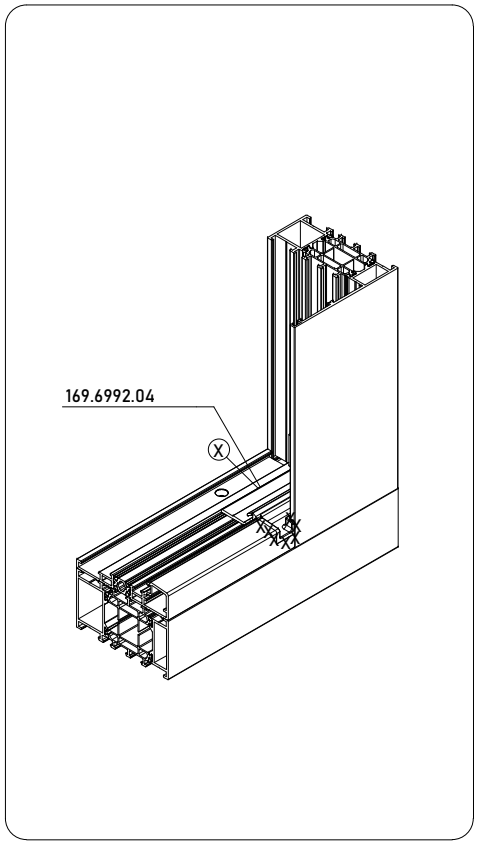

REYNASEAL DUO REYNASEAL DUO REYNASEAL DUO REYNASEAL DUO	REYNAPROTECTOR REYNAPROTECTOR REYNAPROTECTOR REYNAPROTECTOR	DICHTINGSMIDDEL MATIERE D'ETANCHEITE SEALING AGENT ABDICHTUNG

MONTAGEVOLGORDE
L 'ORDRE DE MONTAGE
THE ORDER OF ASSEMBLY
MONTAGEREIHENFOLGE
1 2 3 .

BIJKOMENDE INFO VOORBEREIDING/VERWERKING -> ZIE HOOFDSTUK F 'VERWERKINGSVOORSCHRIFTEN' !
INFO COMPLEMENTAIRE PREPARATION/USINAGE -> VOIR CHAPITRE F 'PRESCRIPTIONS DE MISE EN OEUVRE' !
ADDITIONAL INFO PREPARATION/PROCESSING -> SEE CHAPTER F 'PROCESSING DATA' !
ZUSAETZLICHE INFO VORBEREITUNG/VERARBEITUNG -> SIEHE KAPITEL F 'VERARBEITUNGSVORSCHRIFTEN' !

BOTTOM SOLUTION BALCONY DOOR 2024

BOTTOM SECTION BALCONY DOOR

MASTERLINE 8-Fu

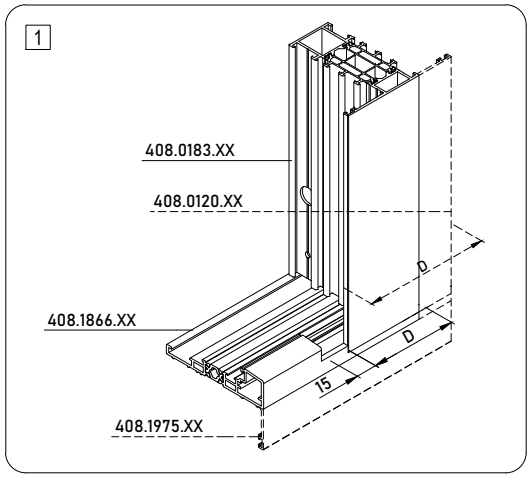

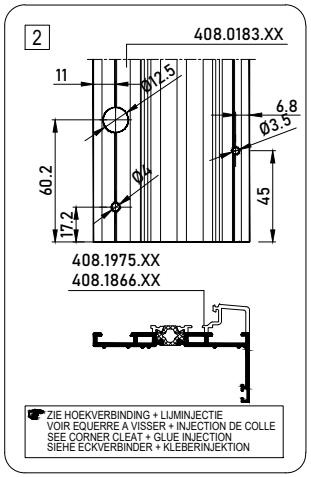

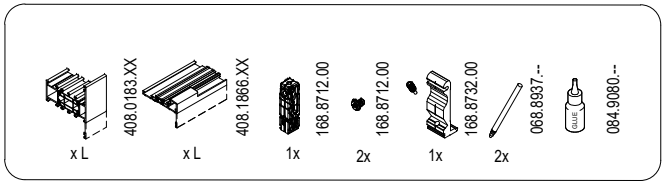

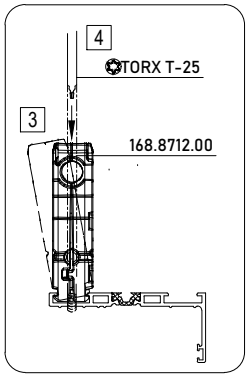

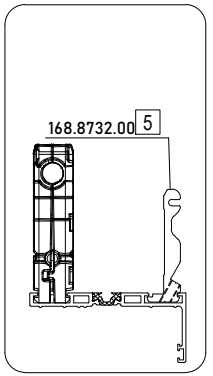

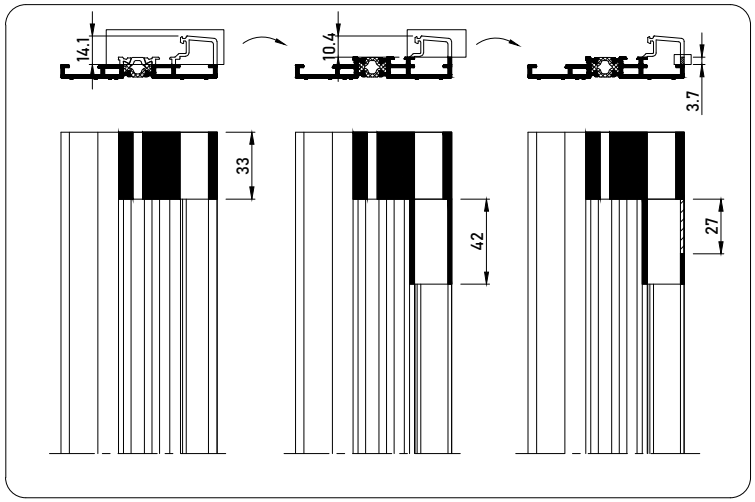

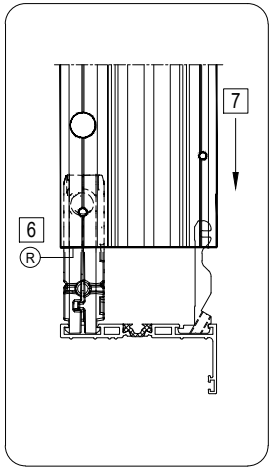

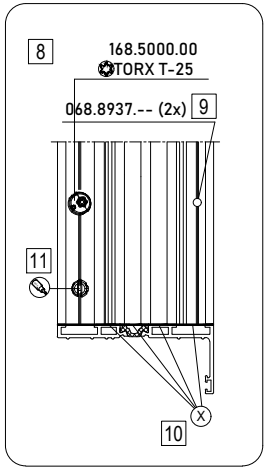

BOTTOM SOLUTION BALCONY DOOR 2024

BOTTOM SECTION BALCONY DOOR

MASTERLINE 8-Fu

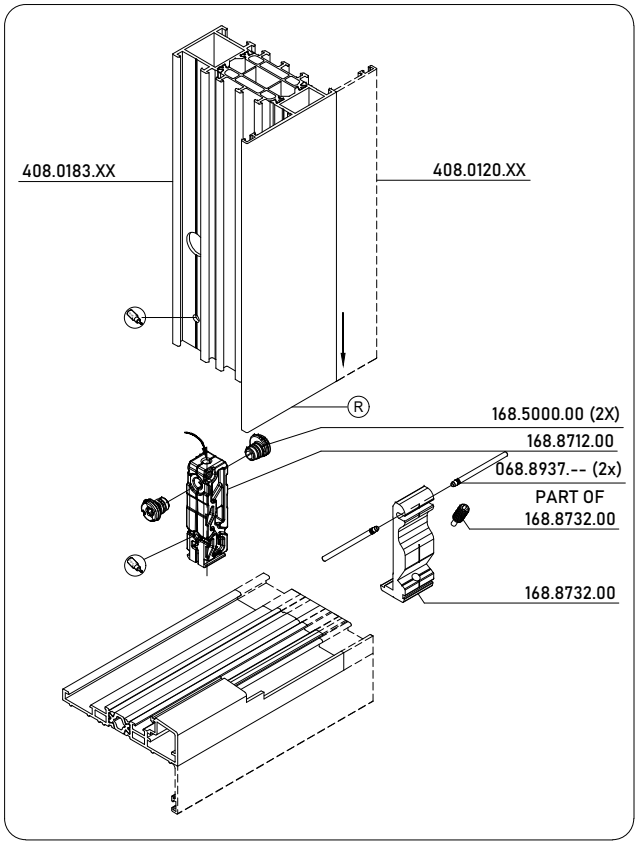

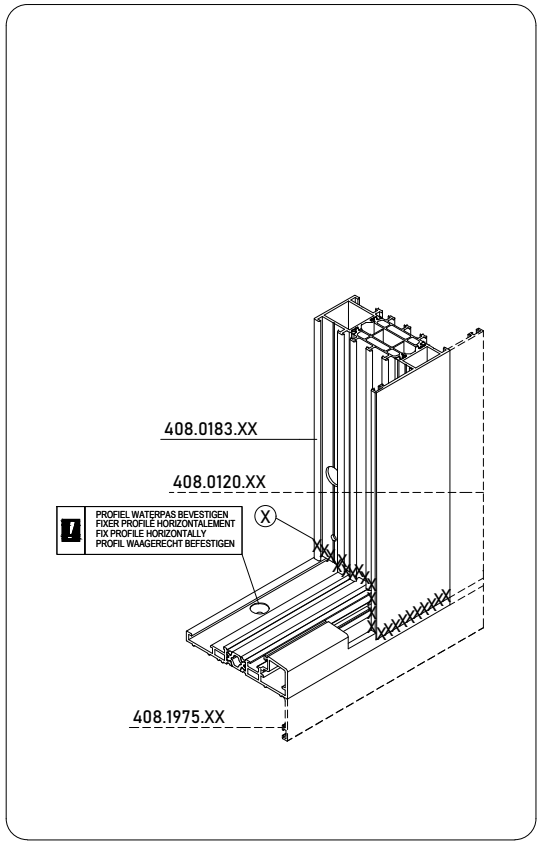

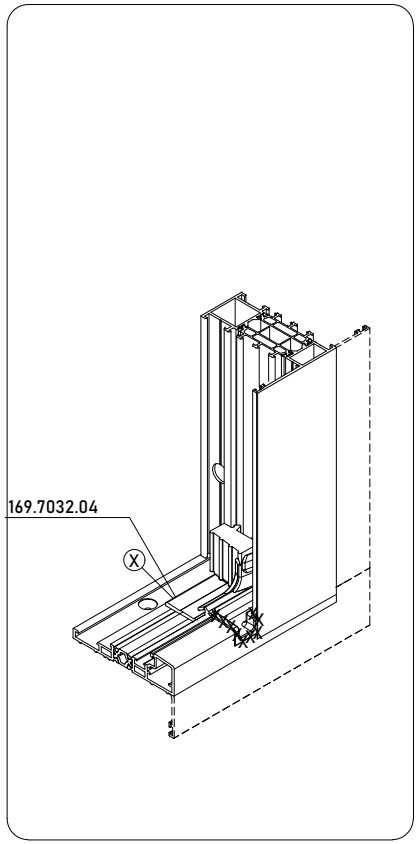

REYNASEAL DUO REYNASEAL DUO REYNASEAL DUO REYNASEAL DUO	R REYNAPROTECTOR REYNAPROTECTOR REYNAPROTECTOR REYNAPROTECTOR	X DICHTINGSMIDDEL MATIERE D'ETANCHEITE SEALING AGENT ABDICHTUNG

MONTAGEVOLGORDE
L 'ORDRE DE MONTAGE
THE ORDER OF ASSEMBLY
MONTAGEREIHENFOLGE
1 2 3 .

BIJKOMENDE INFO VOORBEREIDING/VERWERKING -> ZIE HOOFDSTUK F 'VERWERKINGSVOORSCHRIFTEN' !
INFO COMPLEMENTAIRE PREPARATION/USINAGE -> VOIR CHAPITRE F 'PRESCRIPTIONS DE MISE EN OEUVRE' !
ADDITIONAL INFO PREPARATION/PROCESSING -> SEE CHAPTER F 'PROCESSING DATA' !
ZUSAETZLICHE INFO VORBEREITUNG/VERARBEITUNG -> SIEHE KAPITEL F 'VERARBEITUNGSVORSCHRIFTEN' !

CERTIFICATES DOORS RC2 MASTERLINE 8-AP

CERTIFICATES DOORS RC2

MASTERLINE 8-Fu

EN(V) 1627 - 1630 WK2 / RC2

DEUREN / PORTES / DOORS / TUEREN

TYPE OF ELEMENT	SYSTEM	STANDARD	REPORT NUMBER	SMALLEST ALLOWED PROFILE	ANTI-BURGLAR ACC.	SUPPLIER	MIN/MAX VENT CERT. DIMENSION	INFILL REQ.
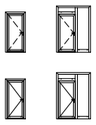	MASTERLINE 8 MASTERLINE 8	ENV 1627-1630-1999-04 EN 1627-1630-2011-09 NEN 5096-2012+A1 : 2015 EN 1627-2011	PIV 22-27/10.120 GE SKG 18.00012-1 EN, NL	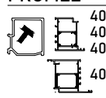	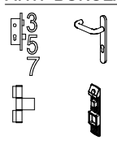	Fuhr Sobinco Themans Dr. Hahn Fuhr Sobinco Rollenband Fapim	FBmin: 624MM FHmin: 1688MM FBmax: 1650MM FHmax: 3200MM	P4A infill
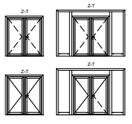	MASTERLINE 8 MASTERLINE 8	ENV 1627-1630-1999-04 EN 1627-1630-2011-09 NEN 5096-2012+A1 : 2015 EN 1627-2011	PIV 22-27/10.120 GE SKG 18.00012-1 EN, NL	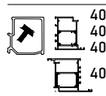	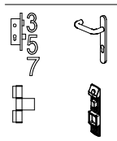	Fuhr Sobinco Themans Dr. Hahn Fuhr Sobinco Rollenband Fapim	FBmin: 624MM FHmin: 1688MM FBmax: 1650MM FHmax: 3200MM	P4A infill
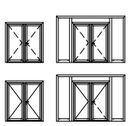	MASTERLINE 8 MASTERLINE 8	ENV 1627-1630-1999-04 EN 1627-1630-2011-09 NEN 5096-2012+A1 : 2015 EN 1627-2011	PIV 22-27/10.120 GE SKG 18.00012-1 EN, NL	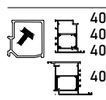	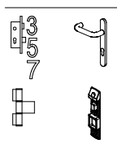	Fuhr Sobinco Themans Dr. Hahn Fuhr Sobinco Rollenband Fapim	FBmin: 624MM FHmin: 1688MM FBmax: 1650MM FHmax: 3200MM	P4A infill
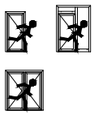	MASTERLINE 8	EN 1627 - 1628 - 1629 - 1630	GSFM-20-083 EN	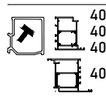	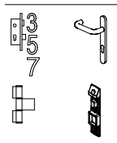	Fuhr Sobinco Themans Dr. Hahn Fuhr Sobinco Rollenband Fapim	FBmin: 940MM FHmin: 2000MM FBmax: 1360MM FHmax: 3200MM	P4A glass + polycarbobante
PANEL DOOR 	MASTERLINE 8	EN 1627 - 1628 - 1629 - 1630	GSFM-20-133 EN	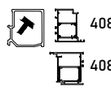	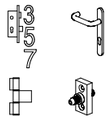	Fuhr Sobinco Themans Dr. Hahn Fuhr Sobinco Rollenband Fapim	FBmin: 800MM FHmin: 2000MM FBmax: 1400MM FHmax: 3200MM	P4A infill
PANEL DOOR DOUBLE SIDED 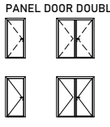	MASTERLINE 8	EN 1627 - 1628 - 1629 - 1630	GSFM-20-133 EN	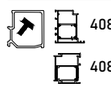	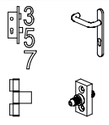	Fuhr Sobinco Themans Dr. Hahn Fuhr Sobinco Rollenband Fapim	FBmin: 800MM FHmin: 2000MM FBmax: 1400MM FHmax: 3200MM	P4A infill
PIVOT DOOR 	MASTERLINE 8	EN 1627 - 1628 - 1629 - 1630	CAR-19-257 EN	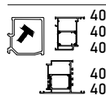	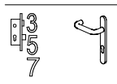	Fuhr Sobinco Themans	FBmin: 1340MM FHmin: 2160MM FBmax: 1700MM FHmax: 2970MM	P4A infill

EN(V) 1627 - 1630 / RC3

DEUREN / PORTES / DOORS / TUEREN

TYPE OF ELEMENT	SYSTEM	STANDARD	REPORT NUMBER	SMALLEST ALLOWED PROFILE	ANTI-BURGLAR ACC.	SUPPLIER	MIN/MAX VENT CERT. DIMENSION	INFILL REQ.
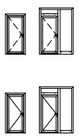	MASTERLINE 8	EN 1627 - 1628 - 1629 - 1630	GSFM-20-133 EN	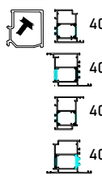	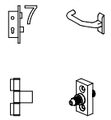	Fuhr Sobinco Themans Dr. Hahn Fuhr Sobinco Rollenband Fapim	FBmin: 800MM FBmax: 1400MM FHmin: 2000MM FHmax: 3200MM	P5A glass / P6B panel
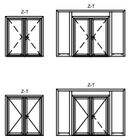	MASTERLINE 8	EN 1627 - 1628 - 1629 - 1630	GSFM-20-083 EN	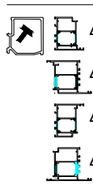	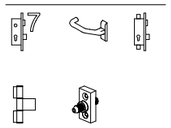	Fuhr Sobinco Themans Dr. Hahn Fuhr Sobinco Rollenband Fapim	FBmin: 800MM FBmax: 1400MM FHmin: 2000MM FHmax: 3200MM	P5A glass / P6B panel
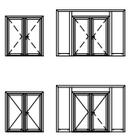	MASTERLINE 8	EN 1627 - 1628 - 1629 - 1630	GSFM-20-083 EN	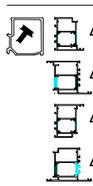	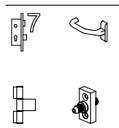	Fuhr Sobinco Themans Dr. Hahn Fuhr Sobinco Rollenband	FBmin: 940MM FBmax: 1360MM FHmin: 2000MM FHmax: 3200MM	P5A glass / P6B panel
	MASTERLINE 8	EN 1627 - 1628 - 1629 - 1630	GSFM-20-083 EN	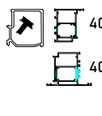	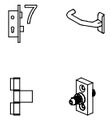	Fuhr Sobinco Themans Dr. Hahn Fuhr Sobinco Rollenband	FBmin: 940MM FBmax: 1360MM FHmin: 2000MM FHmax: 3200MM	P5A glass + polycarbobante/ P6B panel
PANELDOOR 	MASTERLINE 8	EN 1627 - 1628 - 1629 - 1630	GSFM-20-083 EN		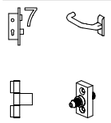	Fuhr Sobinco Themans Dr. Hahn Fuhr Sobinco Rollenband	FBmin: 800MM FBmax: 1400MM FHmin: 2000MM FHmax: 3200MM	P5A glass / P6B panel
PANELDOOR DOUBLE SIDED 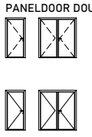	MASTERLINE 8	EN 1627 - 1628 - 1629 - 1630	GSFM-20-083 EN		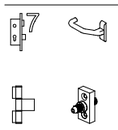	Fuhr Sobinco Themans Dr. Hahn Fuhr Sobinco Rollenband	FBmin: 800MM FBmax: 1400MM FHmin: 2000MM FHmax: 3200MM	P5A glass / P6B panel

CERTIFICATES WINDOWS MASTERLINE 8-AP

CERTIFICATES WINDOWS

MASTERLINE 8-De, MASTERLINE 8-Fu, MASTERLINE 8-HV, MASTERLINE 8-Re

EN(V) 1627-1630 WK2 / RC2

RAMEN / FENETRES / WINDOWS / FENSTER

TYPE OF ELEMENT	SYSTEM	STANDARD	REPORT NUMBER	ANTI-BURGLAR PROF.	ANTI-BURGLAR ACC.	SUPPLIER	MIN/MAX CERT. DIMENSION	MAX. VENT WEIGHT
	MASTERLINE 8 (Fu, Re, De)	EN(V) 1627 - 1630	SKG 16.0007 + 21.00352-A En	 408.0136.XX			FBmin: --MM FBmax: --MM FHmin: --MM FHmax: --MM	---
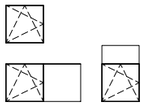	MASTERLINE 8 (Fu, Re, De)	EN(V) 1627 - 1630	SOBINCO PIV, 23-1/16.119 En Fr Du	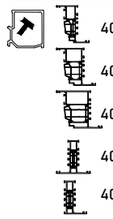 408.0102.XX 408.0192.XX 408.0112.XX 408.0113.XX 408.0136.XX		Sobinco	FBmin: 450MM FBmax: 1700MM FHmin: 600MM FHmax: 2800MM	90 / 170 / 200 kg
	MASTERLINE 8 (Fu, Re, De) MASTERLINE 8 HV		SIEGENIA SKG 16.0007 17.00207 En			Siegenia	FBmin: 450MM FBmax: 1680MM FHmin: 980MM FHmax: 2800MM	100 / 130 / 150 / 200 kg
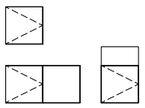	MASTERLINE 8 (Fu, Re, De)	EN(V) 1627 - 1630	SOBINCO PIV, 23-1/16.119 En Fr Du	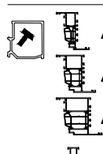 408.0102.XX 408.0192.XX 408.0112.XX 408.0113.XX 408.0136.XX		Sobinco	FBmin: 400MM FBmax: 1700MM FHmin: 600 MM FHmax: 2800MM	90 / 170 kg
	MASTERLINE 8 (Fu, Re, De) MASTERLINE 8 HV	EN(V) 1627 - 1630	SIEGENIA SKG 16.0007 17.00207 En			Siegenia	FBmin: 450MM FBmax: 1680MM FHmin: 980MM FHmax: 2800MM	100 / 130 / 150 / 200 kg
	MASTERLINE 8 (Fu, Re, De)	EN(V) 1627 - 1630	SOBINCO PIV, 23-1/16.119 En Fr Du	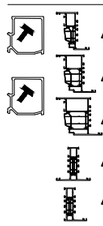 408.0102.XX 408.0192.XX 408.0112.XX 408.0113.XX 408.0136.XX		Sobinco	FBmin: 650MM FBmax: 2400MM FHmin: 600MM FHmax: 1800MM	90 / 130 kg
	MASTERLINE 8 (Fu, Re, De) MASTERLINE 8 HV	EN(V) 1627 - 1630	SIEGENIA SKG 16.0007 17.00207 En			Siegenia	FBmin: 450MM FBmax: 1680MM FHmin: 980MM FHmax: 2200MM	100 / 130 / 150 kg
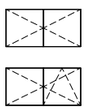	MASTERLINE 8 (Fu, Re, De)	EN(V) 1627 - 1630	SOBINCO PIV, 23-1/16.119 En Fr Du	 408.0102.XX 408.0192.XX 408.0112.XX 408.0113.XX 408.0136.XX	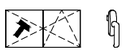	Sobinco	FBmin: 400MM FBmax: 1700MM FHmin: 600MM FHmax: 2800MM	90 / 170 kg
	MASTERLINE 8 (Fu, Re, De) MASTERLINE 8 HV	EN(V) 1627 - 1630	SIEGENIA SKG 16.0007 17.00207 En					

508. ... .XX profiles are also approved

CERTIFICATES WINDOWS MASTERLINE 8-AP

CERTIFICATES WINDOWS

MASTERLINE 8-De, MASTERLINE 8-Fu, MASTERLINE 8-HV, MASTERLINE 8-Re

EN 1627 - 1630 RC3

RAMEN / FENETRES / WINDOWS / FENSTER

TYPE OF ELEMENT	SYSTEM	STANDARD	REPORT NUMBER	SMALLEST ALLOWED PROFILE	ANTI-BURGLAR ACC.	SUPPLIER	MIN/MAX CERT. DIMENSION	MAX. VENT WEIGHT
	MASTERLINE 8 (Fu, Re, De)	EN 1627 - 1630	WTCB, CAR 15072 EN, NL, DE, FR		---	---	FBmin: --MM FBmax: --MM FHmin: --MM FHmax: --MM	---
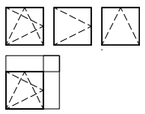	MASTERLINE 8 (Fu, Re, De)	EN 1627 - 1630 	SIEGENIA WTCB, CAR 15072, CAR 17006 EN, NL, DE, FR	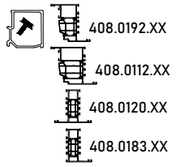	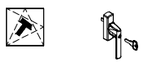 Alu 5200-Rc3 Axxent Plus-Rc3 DK200-Rc3	Siegenia	FBmin: 780MM FBmax: 1600MM FHmin: 980MM FHmax: 2800MM	200 kg

508. ... .XX profiles are also approved

CHANGEOVER PROFILE DOOR

CHANGEOVER PROFILE

MASTERLINE 8-Fu

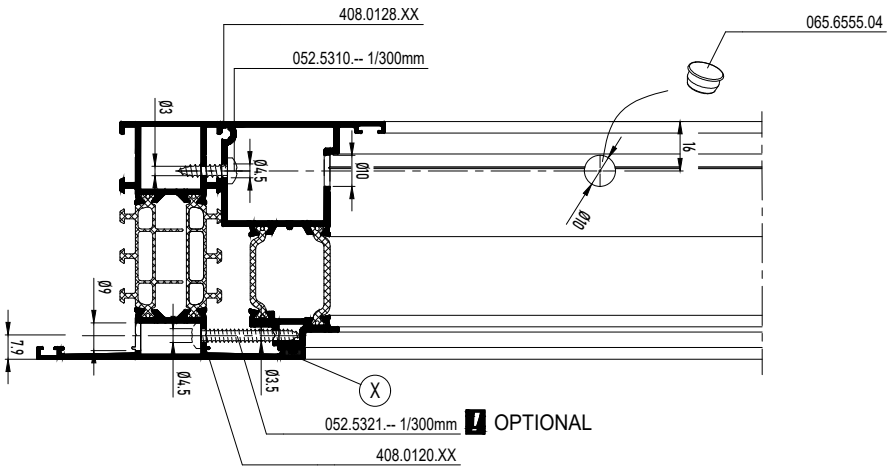

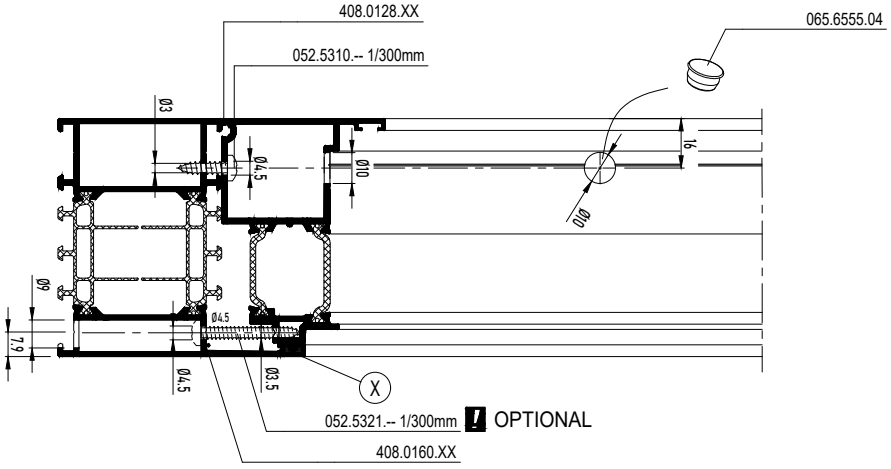

X DICHTINGSMIDDEL
MATIERE D'ETANCHEITE
SEALING AGENT
ABDICHTUNG

CHANGEOVER PROFILE DOOR

CHANGEOVER PROFILE

MASTERLINE 8-Fu

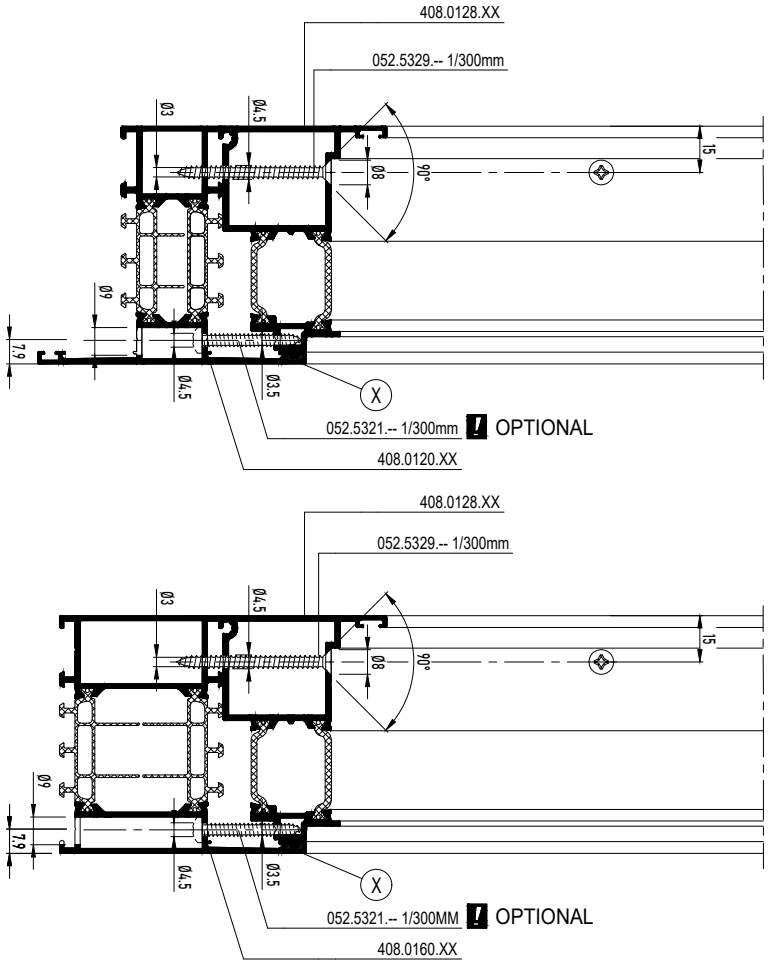

X DICHTINGSMIDDEL
MATIERE D'ETANCHEITE
SEALING AGENT
ABDICHTUNG

CLAMP BLOCKS OVERVIEW MASTERLINE 8

CLAMP BLOCKS

MASTERLINE 8-Fu

408.????.XX	508.????.XX	095.B600 DG104/244	095.E000 SBZ122/30 SBZ122/33 SBZ122/64	095.N300 SBZ122/71 SBZ122/73 SBZ122/74 SBZ122/75	095.B700 SBZ130	095.C300 SBZ140
108.0862.39		B600-03	E000-03	N300-03	B700-03	C300-03
406.0327.XX	508.8180.XX	B600-09	E000-10	N300-10	B700-10	C300-10
408.0010.XX	508.0010.XX	B600-07	E000-07	N300-07	B700-07	C300-07
4K8.0010.XX		B600-07	E000-07	N300-07	B700-07	C300-07
408.0011.XX	508.0011.XX	B600-07	E000-07	N300-07	B700-07	C300-07
4K8.0011.XX		B600-07	E000-07	N300-07	B700-07	C300-07
408.0014.XX		B600-20	E000-26	N300-26	B700-26	C300-26
408.0016.XX		B600-20	E000-26	N300-26	B700-26	C300-26
408.0026.XX		B600-20	E000-27	N300-27	B700-27	C300-27
408.0041.XX		B600-05	E000-06	N300-06	B700-06	C300-06
408.0094.XX		B600-20	E000-26	N300-26	B700-26	C300-26
408.0096.XX		B600-20	E000-27	N300-27	B700-27	C300-27
408.0100.XX	508.0100.XX	B600-10	E000-11	N300-11	B700-11	C300-11
408.0102.XX	508.0102.XX	B600-04	E000-04	N300-04	B700-04	C300-04
408.0108.XX	508.0108.XX	B600-11	E000-12	N300-12	B700-12	C300-12
408.0109.XX	508.0109.XX	B600-10	E000-11	N300-11	B700-11	C300-11
408.0110.XX	508.0110.XX	B600-10	E000-11	N300-11	B700-11	C300-11
408.0111.XX	508.0111.XX	B600-11	E000-12	N300-12	B700-12	C300-12
408.0112.XX	508.0112.XX	B600-04	E000-05	N300-05	B700-05	C300-05
408.0113.XX	508.0113.XX	B600-07	E000-07	N300-07	B700-07	C300-07
4K8.0113.XX		B600-07	E000-07	N300-07	B700-07	C300-07
408.0114.XX	508.0114.XX	B600-07	E000-07	N300-07	B700-07	C300-07
4K8.0114.XX		B600-07	E000-07	N300-07	B700-07	C300-07
408.0117.XX	508.0117.XX	B600-14	E000-11	N300-11	B700-11	C300-11
408.0118.XX	508.0118.XX	B600-11	E000-12	N300-12	B700-12	C300-12
408.0119.XX	508.0119.XX	B600-14	E000-11	N300-11	B700-11	C300-11
408.0120.XX	508.0120.XX	B600-07	E000-07	N300-07	B700-07	C300-07
4K8.0120.XX		B600-07	E000-07	N300-07	B700-07	C300-07
408.0125.XX	508.0125.XX	B600-01	E000-01	N300-01	B700-01	C300-01
408.0136.XX	508.0136.XX	B600-01	E000-01	N300-01	B700-01	C300-01
408.0145.XX	508.0145.XX	B600-13	E000-14	N300-14	B700-14	C300-14
408.0147.XX		B600-13	E000-14	N300-14	B700-14	C300-14
408.0160.XX	508.0160.XX	B600-01	E000-01	N300-01	B700-01	C300-01
408.0161.XX	508.0161.XX	B600-09	E000-10	N300-10	B700-10	C300-10
408.0162.XX	508.0162.XX	B600-09	E000-10	N300-10	B700-10	C300-10
408.0163.XX	508.0163.XX	B600-09	E000-10	N300-10	B700-10	C300-10
408.0164.XX	508.0164.XX	B600-09	E000-10	N300-10	B700-10	C300-10
408.0165.XX	508.0165.XX	B600-07	E000-07	N300-07	B700-07	C300-07
408.0169.XX	508.0169.XX	B600-01	E000-01	N300-01	B700-01	C300-01
4F8.0169.XX	5F8.0169.XX	B600-01	E000-01	N300-01	B700-01	C300-01
408.0170.XX	508.0170.XX	B600-09	E000-10	N300-10	B700-10	C300-10
408.0171.XX	508.0171.XX	B600-09	E000-10	N300-10	B700-10	C300-10
408.0172.XX	508.0172.XX	B600-09	E000-10	N300-10	B700-10	C300-10
408.0173.XX	508.0173.XX	B600-09	E000-10	N300-10	B700-10	C300-10
408.0174.XX	508.0174.XX	B600-09	E000-10	N300-10	B700-10	C300-10
408.0176.XX	508.0176.XX	B600-09	E000-10	N300-10	B700-10	C300-10
408.0179.XX	508.0179.XX	B600-09	E000-10	N300-10	B700-10	C300-10
408.0183.XX	508.0183.XX	B600-01	E000-01	N300-01	B700-01	C300-01
408.0186.XX	508.0186.XX	B600-02	E000-02	N300-02	B700-02	C300-02
408.0192.XX	508.0192.XX	B600-04	E000-04	N300-04	B700-04	C300-04
408.0202.XX	508.0202.XX	B600-04	E000-04	N300-04	B700-04	C300-04
408.0212.XX	508.0212.XX	B600-04	E000-05	N300-05	B700-05	C300-05
408.0213.XX	508.0213.XX	B600-07	E000-07	N300-07	B700-07	C300-07
408.0220.XX	508.0220.XX	B600-07	E000-07	N300-07	B700-07	C300-07
408.0236.XX	508.0236.XX	B600-01	E000-01	N300-01	B700-01	C300-01
408.0245.XX	508.0245.XX	B600-13	E000-14	N300-14	B700-14	C300-14
408.0266.XX		B600-04	E000-05	N300-05	B700-05	C300-05
408.0283.XX	508.0283.XX	B600-01	E000-01	N300-01	B700-01	C300-01

408.????.XX	508.????.XX	095.B600 DG104/244	095.E000 SBZ122/30 SBZ122/33 SBZ122/64	095.N300 SBZ122/71 SBZ122/73 SBZ122/74 SBZ122/75	095.B700 SBZ130	095.C300 SBZ140
408.0292.XX	508.0292.XX	B600-04	E000-04	N300-04	B700-04	C300-04
408.0438.XX		B600-07	E000-07	N300-07	B700-07	C300-07
408.0439.XX		B600-07	E000-07	N300-07	B700-07	C300-07
408.0442.XX	508.0442.XX	B600-02	E000-02	N300-02	B700-02	C300-02
408.0443.XX	508.0443.XX	B600-02	E000-02	N300-02	B700-02	C300-02
408.0444.XX	508.0444.XX	B600-02	E000-02	N300-02	B700-02	C300-02
408.0469.XX		B600-21	E000-29	N300-29	B700-29	C300-29
408.0498.XX		B600-22	E000-28	N300-28	B700-28	C300-28
408.0501.XX	508.0501.XX	B600-15	E000-17	N300-17	B700-17	C300-17
408.0502.XX	508.0502.XX	B600-15	E000-17	N300-17	B700-17	C300-17
408.0503.XX	508.0503.XX	B600-15	E000-17	N300-17	B700-17	C300-17
408.0504.XX	508.0504.XX	B600-15	E000-17	N300-17	B700-17	C300-17
408.0505.XX	508.0505.XX	B600-16	E000-18	N300-18	B700-18	C300-18
408.0506.XX	508.0506.XX	B600-16	E000-18	N300-18	B700-18	C300-18
408.0510.XX		B600-15	E000-22	N300-22	B700-22	C300-22
408.0513.XX	508.0513.XX	B600-16	E000-18	N300-18	B700-18	C300-18
408.0520.XX	508.0520.XX	B600-16	E000-18	N300-18	B700-18	C300-18
408.0536.XX	508.0536.XX	B600-18	E000-20	N300-20	B700-20	C300-20
408.0538.XX	508.0538.XX	B600-18	E000-20	N300-20	B700-20	C300-20
408.0539.XX	508.0539.XX	B600-18	E000-20	N300-20	B700-20	C300-20
408.0541.XX		B600-02	E000-02	N300-02	B700-02	C300-02
408.0569.XX		B600-21	E000-29	N300-29	B700-29	C300-29
408.0582.XX	508.0582.XX	B600-18	E000-20	N300-20	B700-20	C300-20
408.0583.XX	508.0583.XX	B600-18	E000-20	N300-20	B700-20	C300-20
408.0598.XX		B600-22	E000-28	N300-28	B700-28	C300-28
408.0669.XX		B600-24	E000-24/25	N300-24/25	B700-24/25	C300-24/25
408.0698.XX		B600-24	E000-23	N300-23	B700-23	C300-23
408.0715.XX		B600-01	E000-01	N300-01	B700-01	C300-01
408.0720.XX		B600-23	E000-30	N300-30	B700-30	C300-30
408.0769.XX		B600-20	E000-27	N300-27	B700-27	C300-27
408.0790.XX		B600-01	E000-01	N300-01	B700-01	C300-01
408.0798.XX		B600-20	E000-26	N300-26	B700-26	C300-26
408.0813.XX	508.0813.XX	B600-07	E000-08	N300-08	B700-08	C300-08
408.0815.XX	508.0815.XX	B600-07	E000-07	N300-07	B700-07	C300-07
408.0820.XX	508.0820.XX	B600-07	E000-08	N300-08	B700-08	C300-08
408.0825.XX	508.0825.XX	B600-01	E000-01	N300-01	B700-01	C300-01
408.0826.XX	508.0826.XX	B600-01	E000-01	N300-01	B700-01	C300-01
408.0869.XX		B600-21	E000-29	N300-29	B700-29	C300-29
408.0880.XX	508.0880.XX	B600-01	E000-15	N300-15	B700-15	C300-15
408.0882.XX	508.0882.XX	B600-01	E000-15	N300-15	B700-15	C300-15
408.0883.XX	508.0883.XX	B600-01	E000-15	N300-15	B700-15	C300-15
408.0885.XX	508.0885.XX	B600-01	E000-15	N300-15	B700-15	C300-15
408.0886.XX	508.0886.XX	B600-01	E000-15	N300-15	B700-15	C300-15
408.0890.XX	508.0890.XX	B600-03	E000-03	N300-03	B700-03	C300-03
408.0892.XX	508.0892.XX	B600-03	E000-03	N300-03	B700-03	C300-03
408.0894.XX	508.0894.XX	B600-03	E000-03	N300-03	B700-03	C300-03
408.0898.XX		B600-22	E000-28	N300-28	B700-28	C300-28
408.0902.XX	508.0902.XX	B600-04	E000-04	N300-04	B700-04	C300-04
408.0912.XX	508.0912.XX	B600-04	E000-05	N300-05	B700-05	C300-05
408.0913.XX	508.0913.XX	B600-07	E000-07	N300-07	B700-07	C300-07
408.0920.XX	508.0920.XX	B600-07	E000-07	N300-07	B700-07	C300-07
408.0936.XX	508.0936.XX	B600-01	E000-01	N300-01	B700-01	C300-01
408.0983.XX	508.0983.XX	B600-01	E000-01	N300-01	B700-01	C300-01
408.0992.XX	508.0992.XX	B600-04	E000-04	N300-04	B700-04	C300-04
408.1051.XX	508.1051.XX	B600-05	E000-06	N300-06	B700-06	C300-06
4F8.1051.XX	5F8.1051.XX	B600-05	E000-06	N300-06	B700-06	C300-06
408.1115.XX	508.1115.XX	B600-08	E000-09	N300-09	B700-09	C300-09
408.1116.XX	508.1116.XX	B600-07	E000-07	N300-07	B700-07	C300-07

408.????.XX	508.????.XX	095.B600 DG104/244	095.E000 SBZ122/30 SBZ122/33 SBZ122/64	095.N300 SBZ122/71 SBZ122/73 SBZ122/74 SBZ122/75	095.B700 SBZ130	095.C300 SBZ140
4F8.1116.XX	5F8.1116.XX	B600-07	E000-07	N300-07	B700-07	C300-07
408.1123.XX	508.1123.XX	B600-07	E000-07	N300-07	B700-07	C300-07
4F8.1123.XX	5F8.1123.XX	B600-07	E000-07	N300-07	B700-07	C300-07
408.1140.XX	508.1140.XX	B600-01	E000-01	N300-01	B700-01	C300-01
408.1142.XX	508.1142.XX	B600-01	E000-01	N300-01	B700-01	C300-01
4F8.1142.XX	5F8.1142.XX	B600-01	E000-01	N300-01	B700-01	C300-01
408.1251.XX	508.1251.XX	B600-05	E000-06	N300-06	B700-06	C300-06
4F8.1251.XX	5F8.1251.XX	B600-05	E000-06	N300-06	B700-06	C300-06
408.1314.XX		B600-20	E000-26	N300-26	B700-26	C300-26
408.1316.XX		B600-20	E000-27	N300-27	B700-27	C300-27
408.1334.XX		B600-20	E000-26	N300-26	B700-26	C300-26
408.1515.XX	508.1515.XX	B600-17	E000-19	N300-19	B700-19	C300-19
408.1535.XX	508.1535.XX	B600-19	E000-21	N300-21	B700-21	C300-21
408.1545.XX		B600-17	E000-19	N300-19	B700-19	C300-19
408.1850.XX	508.1850.XX	B600-07	E000-07	N300-07	B700-07	C300-07
4K8.1850.XX		B600-07	E000-07	N300-07	B700-07	C300-07
408.1851.XX	508.1851.XX	B600-07	E000-07	N300-07	B700-07	C300-07
4K8.1851.XX		B600-07	E000-07	N300-07	B700-07	C300-07
408.1852.XX	508.1852.XX	B600-07	E000-07	N300-07	B700-07	C300-07
4K8.1852.XX		B600-07	E000-07	N300-07	B700-07	C300-07
408.1853.XX	508.1853.XX	B600-07	E000-07	N300-07	B700-07	C300-07
4K8.1853.XX		B600-07	E000-07	N300-07	B700-07	C300-07
408.1854.XX	508.1854.XX	B600-07	E000-07	N300-07	B700-07	C300-07
4K8.1854.XX		B600-07	E000-07	N300-07	B700-07	C300-07
408.1855.XX	508.1855.XX	B600-06	E000-07	N300-07	B700-07	C300-07
4K8.1855.XX		B600-06	E000-07	N300-07	B700-07	C300-07
408.1856.XX	508.1856.XX	B600-06	E000-07	N300-07	B700-07	C300-07
4K8.1856.XX		B600-06	E000-07	N300-07	B700-07	C300-07
408.1891.XX	508.1891.XX	B600-03	E000-03	N300-03	B700-03	C300-03
408.1896.XX	508.1896.XX	B600-03	E000-03	N300-03	B700-03	C300-03
4F8.1896.XX	5F8.1896.XX	B600-03	E000-03	N300-03	B700-03	C300-03
408.1951.XX	508.1951.XX	B600-05	E000-06	N300-06	B700-06	C300-06
4F8.1951.XX	5F8.1951.XX	B600-05	E000-06	N300-06	B700-06	C300-06
408.3100.XX	508.3100.XX	B600-10	E000-11	N300-11	B700-11	C300-11
408.3109.XX	508.3109.XX	B600-10	E000-11	N300-11	B700-11	C300-11
408.3110.XX	508.3110.XX	B600-10	E000-11	N300-11	B700-11	C300-11
408.3111.XX		B600-11	E000-12	N300-12	B700-12	C300-12
408.3180.XX	508.3180.XX	B600-10	E000-11	N300-11	B700-11	C300-11
408.4001.XX	508.4001.XX	B600-12	E000-13	N300-13	B700-13	C300-13
408.8110.XX	508.8110.XX	B600-09	E000-10	N300-10	B700-10	C300-10
408.8130.XX	508.8130.XX	B600-09	E000-10	N300-10	B700-10	C300-10
408.8139.XX	508.8139.XX	B600-09	E000-10	N300-10	B700-10	C300-10
408.8155.XX	508.8155.XX	B600-09	E000-10	N300-10	B700-10	C300-10
408.0214.XX		E600-20	E000-26	N300-26	B700-26	C300-26
408.0226.XX		E600-20	E00027	N300-27	B700-27	C300-27
408.0224.XX		E600-20	E000-26	N300-26	B700-26	C300-26

BOEKOMENDE INFO VOORBEREIDING/VERWERKING -> ZIE HOOFDSTUK F 'VERWERKINGSVOORSCHRIFTEN' !
INFO COMPLEMENTAIRE PREPARATION/USINAGE -> VOIR CHAPITRE F 'PRESCRIPTIONS DE MISE EN OEUVRE' !
ADDITIONAL INFO PREPARATION/PROCESSING -> SEE CHAPTER F 'PROCESSING DATA' !
ZUSAETZLICHE INFO VORBEREITUNG/VERARBEITUNG -> SIEHE KAPITEL F 'VERARBEITUNGSVORSCHRIFTEN' !

	EN(V) RC2	EN RC3
SYSTEMS	MASTERLINE 8	MASTERLINE 8
!	* Max. afmetingen * Gecertificeerde configuraties * Approved profiles * Max. dimensions * Certified configurations * Approved profiles	* Dimensions max. * Configurations certifiées * Profilés approuvés * Max. Abmessungen * Zertifizierte Konfigurationen * Genehmigte Profile
VERSTEVIGINGSPROFIEL PROFILE DE RENFORCEMENT REINFORCEMENT PROFILE VERSTAERKUNGSPROFIL		**169.6538.17 (MASTERLINE 8)** 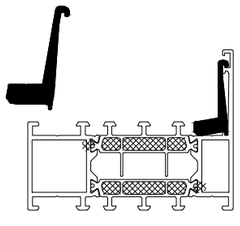
BEGLAZING VITRAGE GLAZING VERGLASUNG	* EN 356 : P4A	* EN 356 : P5A * Glued glazing: 084.9055.01
BESLAG ACCESSORIES ACCESSORIES BESCHLAG	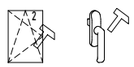 * Sobinco Chrono Safe * Siegenia Alu 5200 - RC2 * Siegenia Axxent Plus - RC2	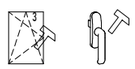 * Siegenia Alu 5200 - RC3 * Siegenia Axxent Plus - RC3

	EN(V) RC2	
SYSTEMS	MASTERLINE 8-HV	
!	* Max. afmetingen * Gecertificeerde configuraties * Approved profiles * Max. diminsions * Certified configurations * Approved profiles	* Dimensions max. * Configurations certifiées * Profilés approuvés * Max. Abmessungen * Zertifizierte Konfigurationen * Genehmigte Profile
VERSTEVIGINGSPROFIEL PROFILE DE RENFORCEMENT REINFORCEMENT PROFILE VERSTAERKUNGSPROFIL	Spacer tape "Thermalbond V2100" or similar Silicone for general glazing and weather sealing in curtain wall and building facades 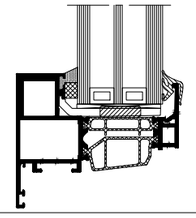	
BEGLAZING VITRAGE GLAZING VERGLASUNG	* EN 356 : P4A	
BESLAG ACCESSORIES ACCESSORIES BESCHLAG	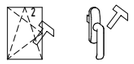 * Sobinco Chrono INVISION Safe - RC2 * Siegenia Axxent Plus - RC2	

CLASSIFICATIONS WINDOWS MASTERLINE 8-AP

OVERVIEW CLASSIFICATIONS WINDOWS

MASTERLINE 8-Fu

	EN(V) RC2	EN RC3
SYSTEMS	MASTERLINE 8	MASTERLINE 8
!	* Max. afmetingen * Gecertificeerde configuraties * Approved profiles * Max. diminsions * Certified configurations * Approved profiles	* Dimensions max. * Configurations certifiées * Profilés approuvés * Max. Abmessungen * Zertifizierte Konfigurationen * Genehmigte Profile
VERSTEVIGINGSPROFIEL PROFILE DE RENFORCEMENT REINFORCEMENT PROFILE VERSTAERKUNGSPROFIL		169.6538.17 (MASTERLINE 8) 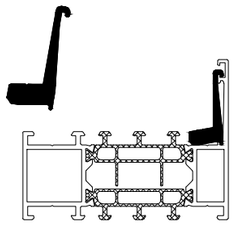
BEGLAZING VITRAGE GLAZING VERGLASUNG	* EN 356 : P4A	* EN 356 : P5A * Glued glazing: 084.9055.01 084.9056.04 OR SIMILAR
BESLAG ACCESSORIES ACCESSORIES BESCHLAG	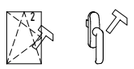 * Sobinco Chrono INVISION Safe - RC2 * Siegenia Axxent Plus - RC2	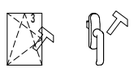 * Siegenia Axxent Plus - RC3

EN 13049	Classification
Glass size 800 x 1000 mm (b x h) Thickness 66.2	Class III (450mm drop height, office) Test Result SKG 20.00736
Glass size 2000 x 1000 mm (b x h) Thickness 1010.4	Class III (450mm drop height, Office) Test Results SKG 20.00499

NEN EN 1991-1-1 Bouwbesluit 2012	Classification
Glass size 800 x 1000 mm (b x h) Thickness 66.2	1000mm drop height, Residential / public Test Results SKG 20.00736.1
Glass size 2000 x 1000 mm (b x h) Thickness 1010.4	1000mm drop height, Residential / public Test Results SKG 20.00499.1

MASTERLINE 8 INWARD OPENING

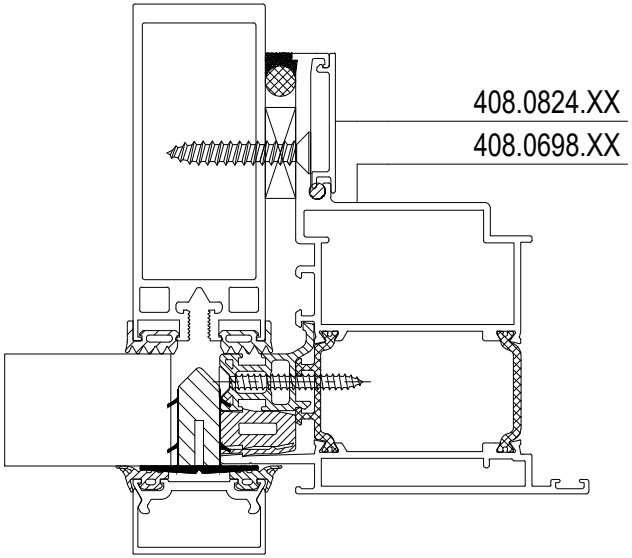

MASTERLINE 8 OUTWARD OPENING

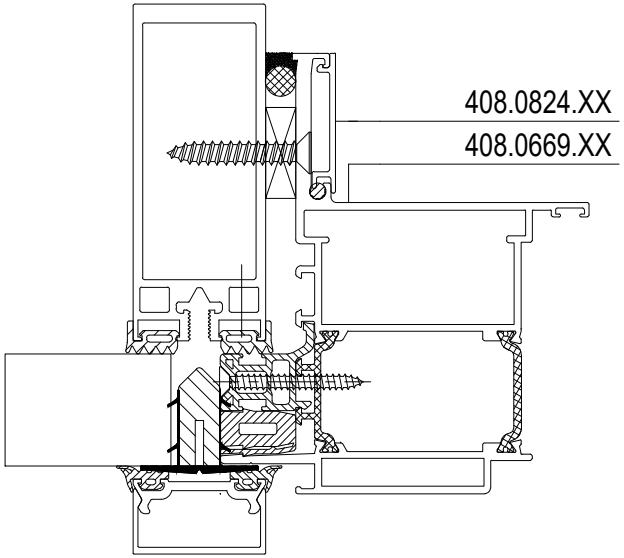

MASTERLINE 8

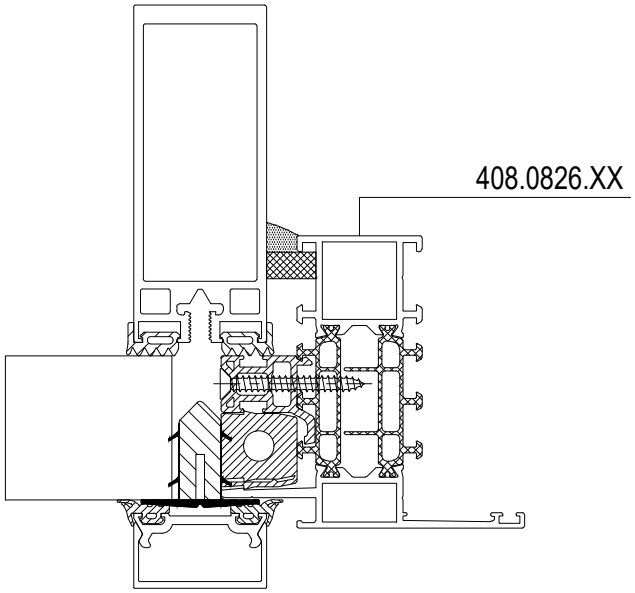

CW OUTWARD OPENING SG

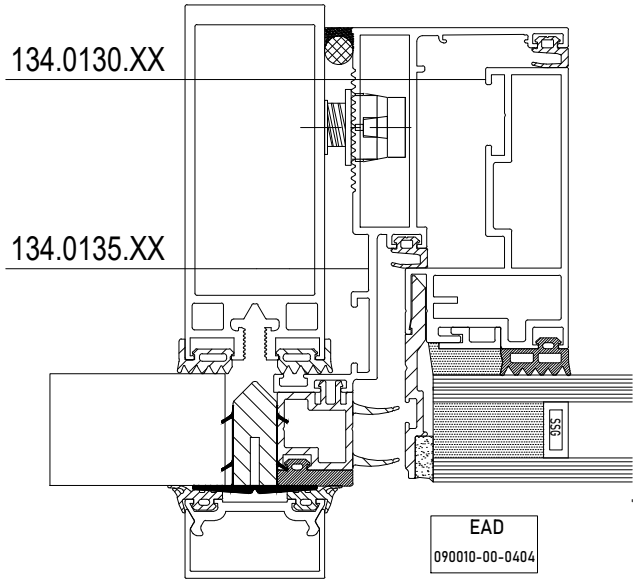

CW OUTWARD OPENING

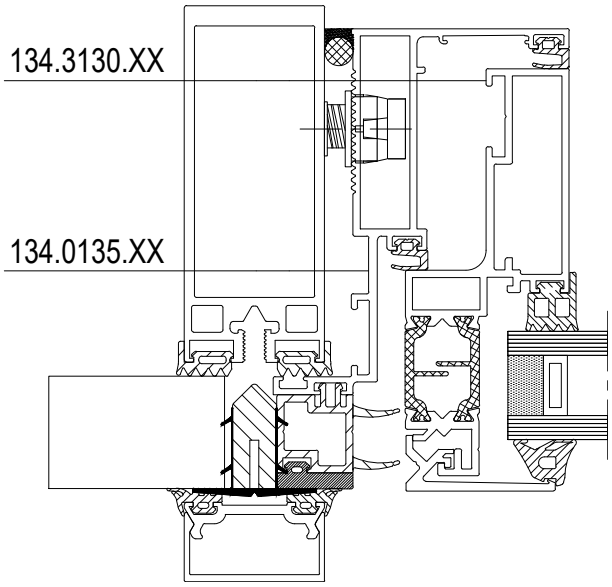

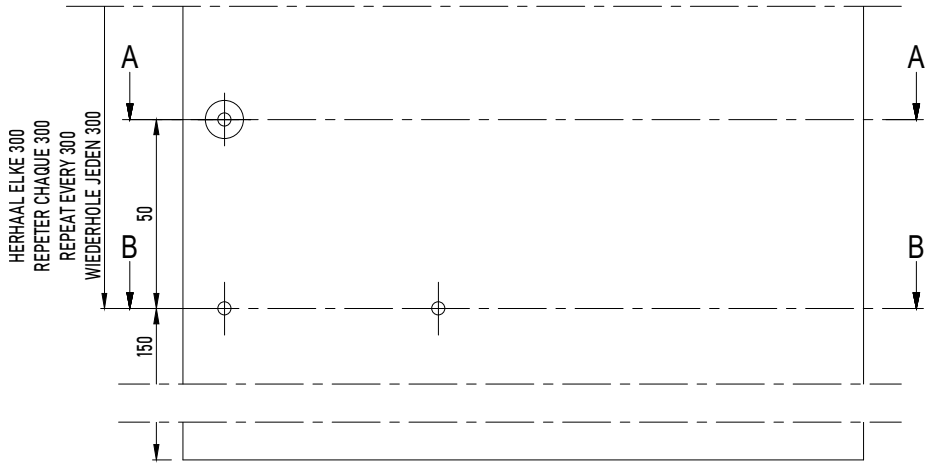

A-A (MASTERPATIO)

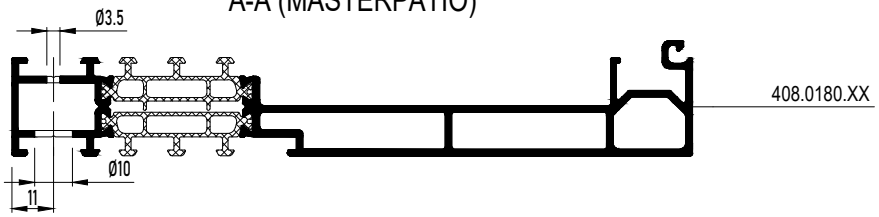

B-B (MASTERLINE)

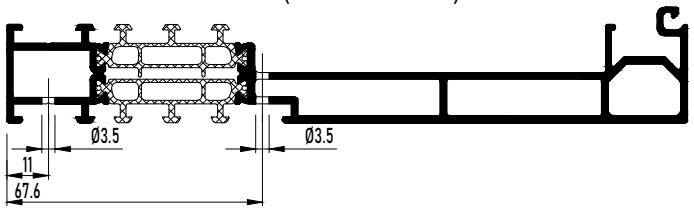

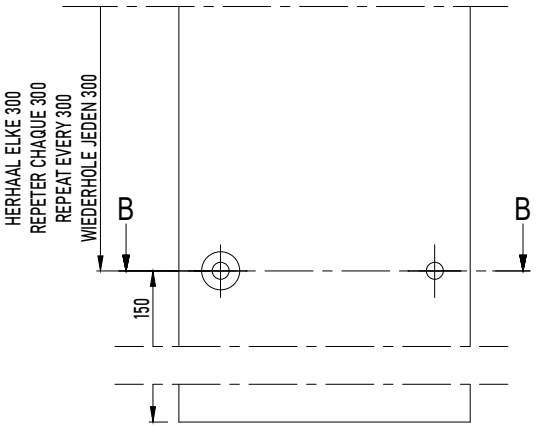
HERHAAL ELKE 300
REPETER CHAQUE 300
REPEAT EVERY 300
WIEDERHOLE JEDEN 300
B
B
150

A-A

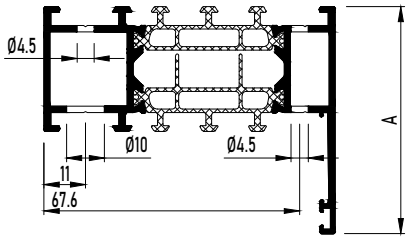
Ø4.5
Ø10
Ø4.5
11
67.6
A

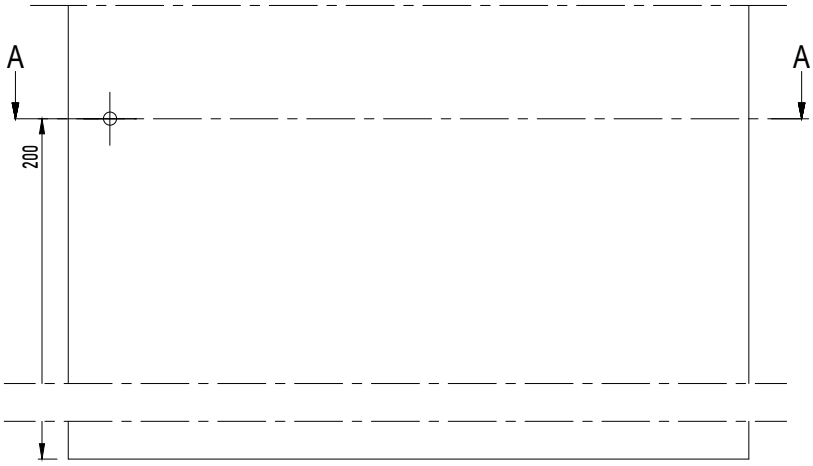
A
A
200

A-A

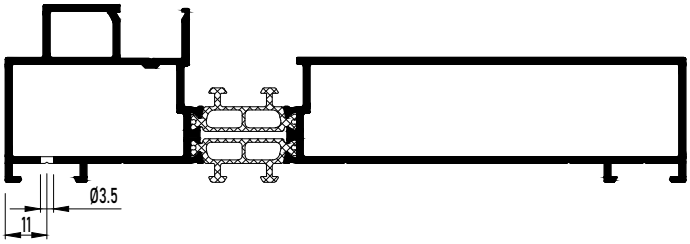
Ø3.5
11

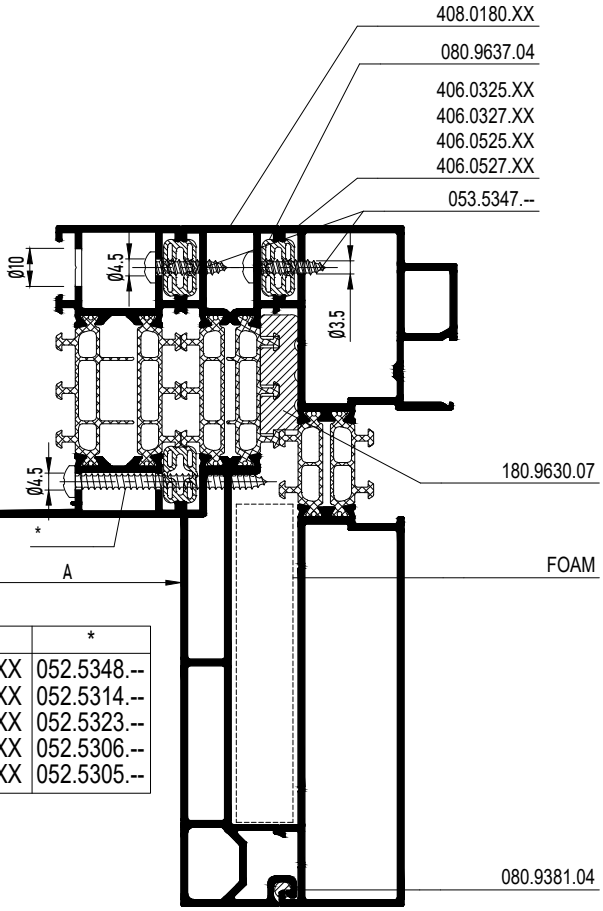

Masterline 8

A		*
53mm	408.0136.XX	052.5348.--
60mm	408.0183.XX	052.5314.--
70mm	408.0160.XX	052.5323.--
80mm	408.0125.XX	052.5306.--
90mm	408.0169.XX	052.5305.--

CONNECTION MasterPatio

CONNECTIONS WITH OTHER SYSTEMS

MASTERLINE 8-Fu, MasterPatio, MasterPatio S

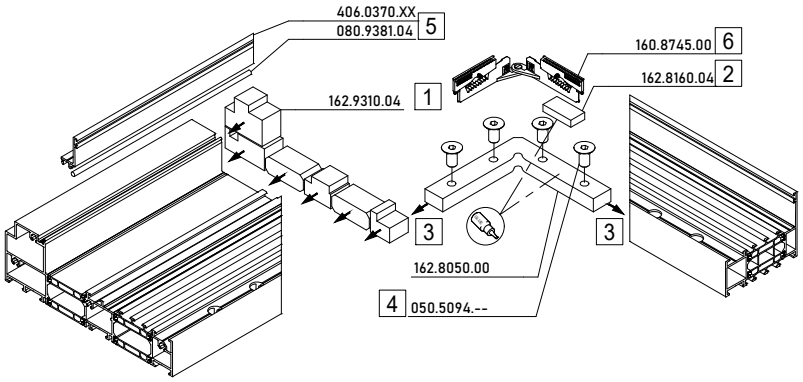

		#
052.5381.--		4
162.9310.04		1 (corner side)
"		1 (straight side)
162.8160.04		2
160.8745.00		2
162.8050.00		2
050.5094.--		8
162.9343.XX		1
162.9344.XX		1

or

162.9345.XX		1
162.9346.XX		1

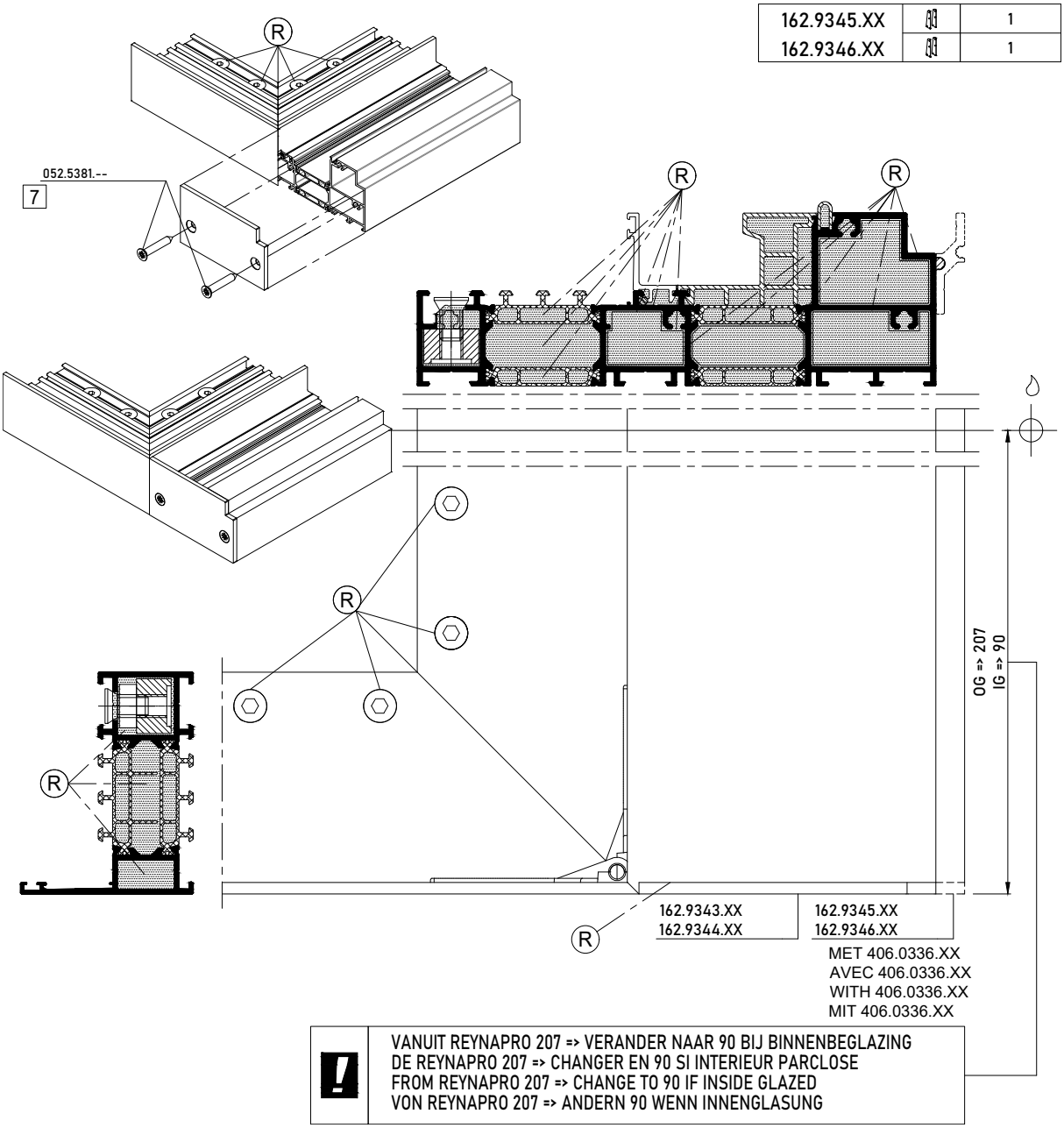

VANUIT REYNAPRO 207 => VERANDER NAAR 90 BIJ BINNENBEGLAZING
DE REYNAPRO 207 => CHANGER EN 90 SI INTERIEUR PARCLOSE
FROM REYNAPRO 207 => CHANGE TO 90 IF INSIDE GLAZED
VON REYNAPRO 207 => ANDERN 90 WENN INNENGLASUNG

		#
162.9310.04		1 (corner side)
"		1 (straight side)
080.9724.04		2
162.8160.04		2
162.8050.00		2
050.5094.--		8

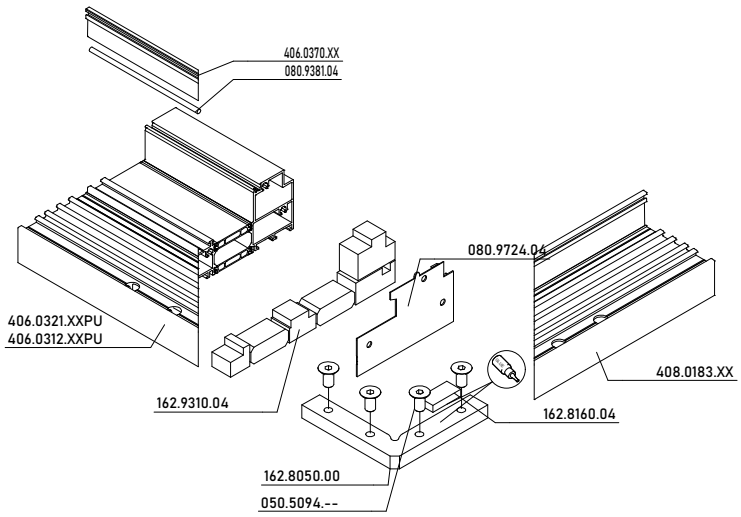

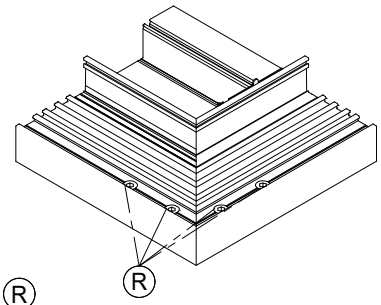

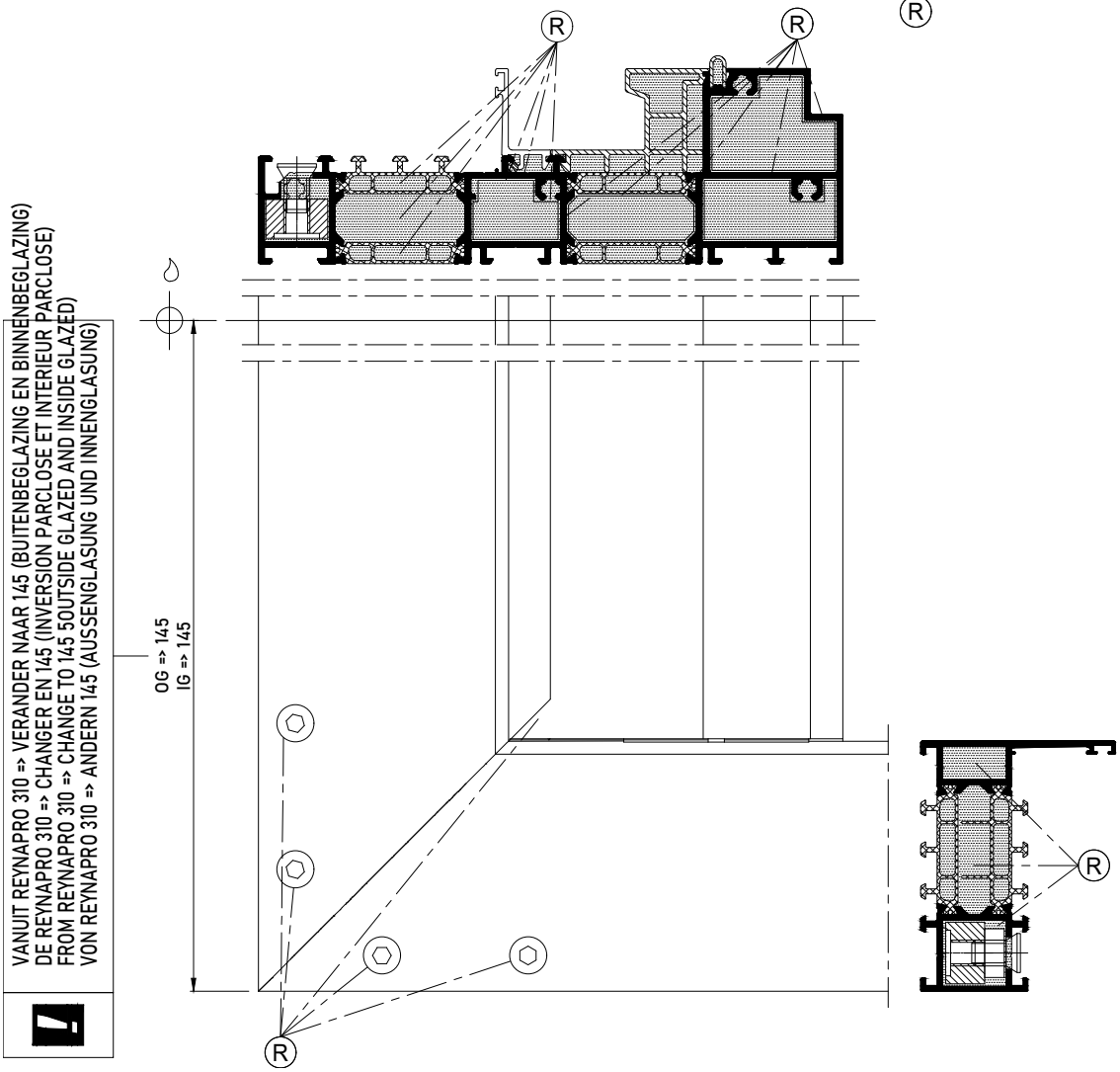

MONORAIL BUITENBEGLAZING
MONORAIL VITRE PAR L'EXTERIEUR
MONORAIL OUTSIDE GLAZED
MONORAIL AUSSENVERGLASUNG

SILICONE AANBRENGEN OM LEKKEN BIJ DE KOPPELING TE VOORKOMEN
APPLIQUER DE SILICONE POUR EVITER LES FUITES A L'ACCOUPPLEMENT
APPLY SILICONE TO PREVENT LEAKAGE AT THE COUPLING
SILIKON ANWENDEN ZUR VERHINDERUNG VON LECKAGEN AN DER KUPPLUNG

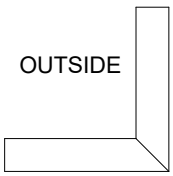

BIJ KOPPELING GEBRUIK WATERDICHTE FOLIE
EN CAS DE RACCORDEMENT, EMPLOYEZ DE FEUIL ETANCHE
WHEN CONNECTING, APPLY WATERTIGHT FOIL
BEI KOPPELUNG, WENDEN SIE EINE WASSERDICHTE FOLIE AN

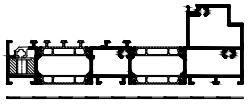

MONORAIL BINNENBEGLAZING
MONORAIL VITRE PAR L'INTERIEUR
MONORAIL INSIDE GLAZED
MONORAIL INNENVERGLASUNG

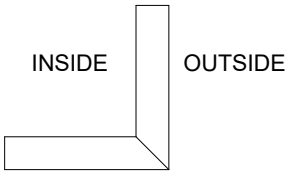

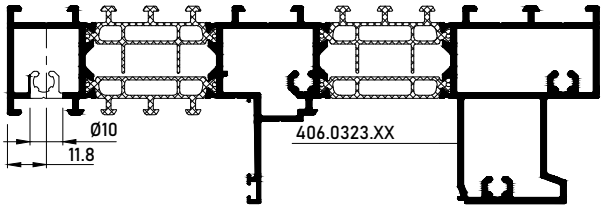

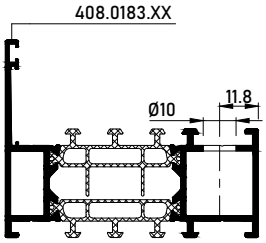

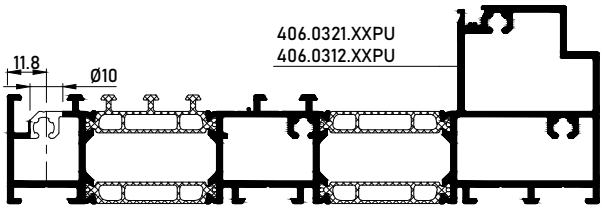

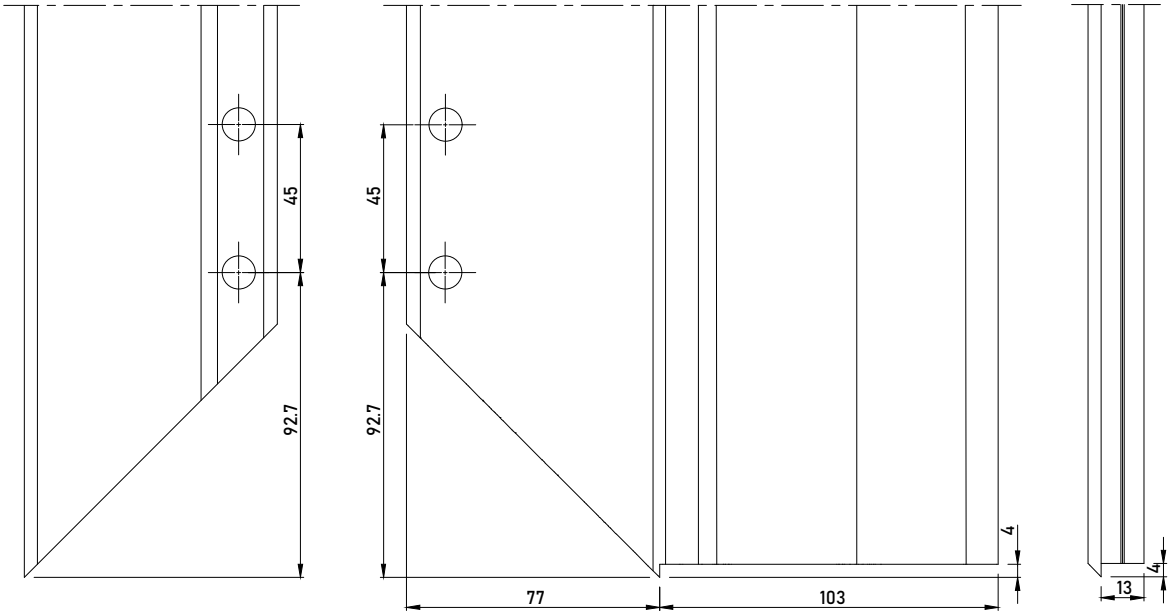

MONTAGEVOLGORDE
L 'ORDRE DE MONTAGE
THE ORDER OF ASSEMBLY
MONTAGEREIHENFOLGE
1 2 3 .

MONORAIL BUITENBEGLAZING
MONORAIL VITRE PAR L'EXTERIEUR
MONORAIL OUTSIDE GLAZED
MONORAIL AUSSENVERGLASUNG

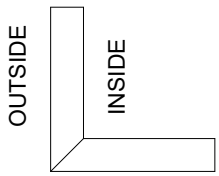

SILICONE AANBRENGEN OM LEKKEN BIJ DE KOPPELING TE VOORKOMEN
APPLIQUER DE SILICONE POUR EVITER LES FUITES A L'ACCOUPPLEMENT
APPLY SILICONE TO PREVENT LEAKAGE AT THE COUPLING
SILIKON ANWENDEN ZUR VERHINDERUNG VON LECKAGEN AN DER KUPPLUNG

BIJ KOPPELING GEBRUIK WATERDICHTE FOLIE
EN CAS DE RACCORDEMENT, EMPLOYEZ DE FEUIL ETANCHE
WHEN CONNECTING, APPLY WATERTIGHT FOIL
BEI KOPPELUNG, WENDEN SIE EINE WASSERDICHTE FOLIE AN

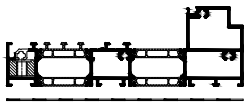

MONORAIL BINNENBEGLAZING
MONORAIL VITRE PAR L'INTERIEUR
MONORAIL INSIDE GLAZED
MONORAIL INNENVERGLASUNG

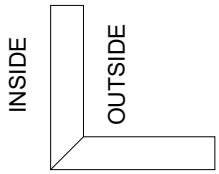

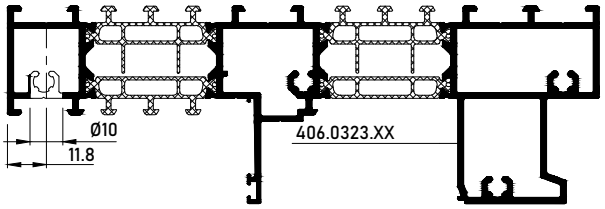

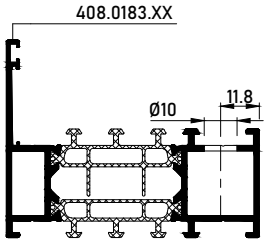

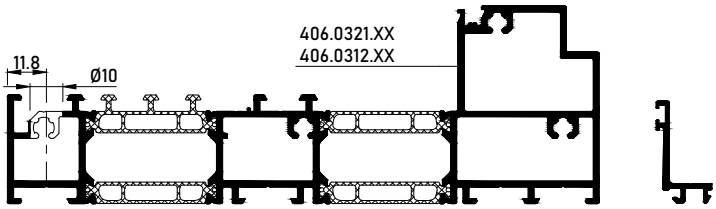

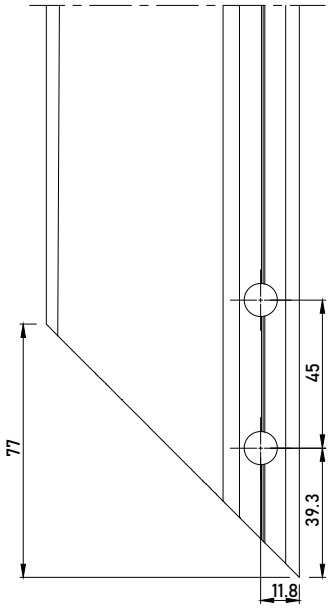

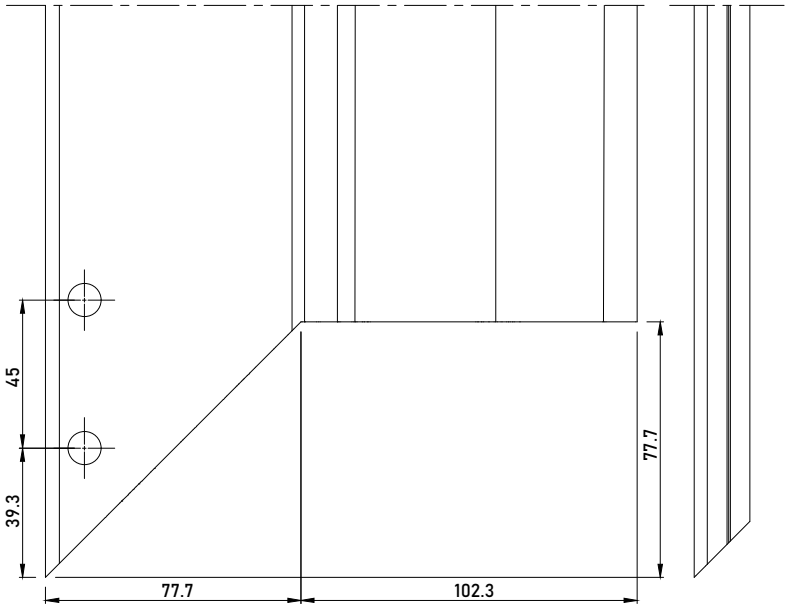

MONTAGEVOLGORDE
L 'ORDRE DE MONTAGE
THE ORDER OF ASSEMBLY
MONTAGEREIHENFOLGE
1 2 3 .

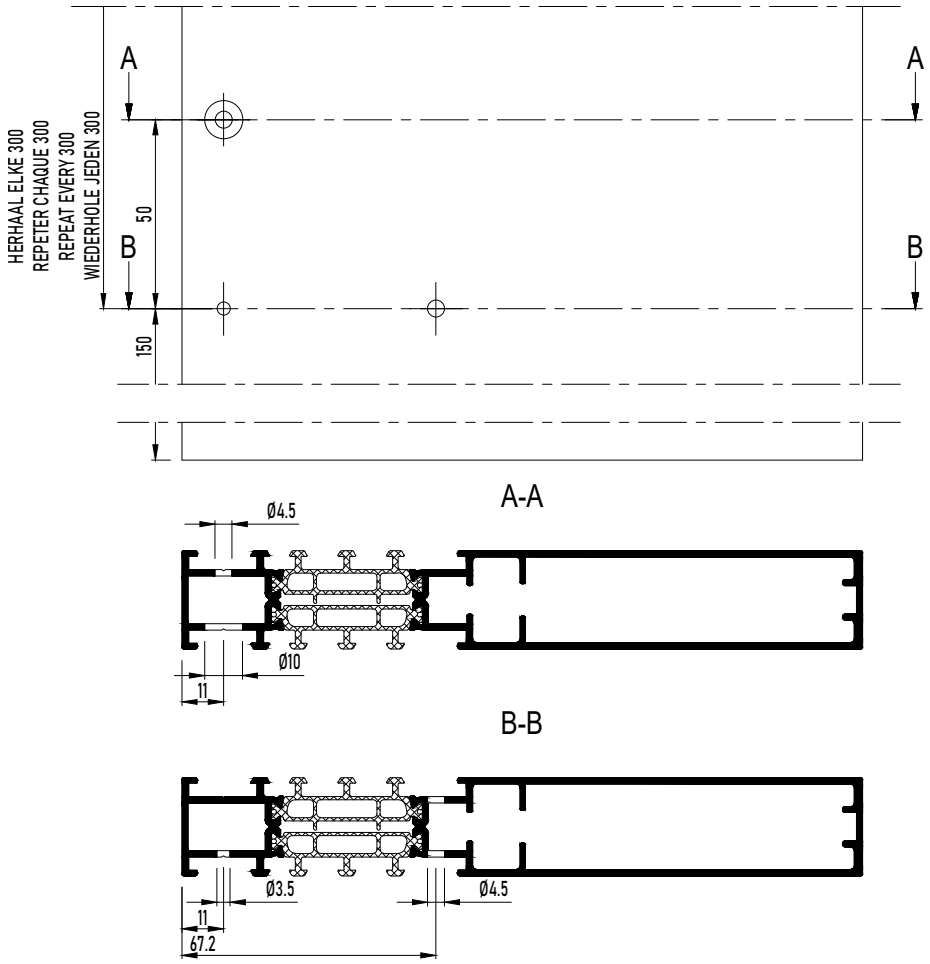
HERHAAL ELKE 300
REPETER CHAQUE 300
REPEAT EVERY 300
WIEDERHOLE JEDEN 300
A
A
B
B
50
150
A-A
Ø4.5
Ø10
11
B-B
Ø3.5
Ø4.5
11
67.2

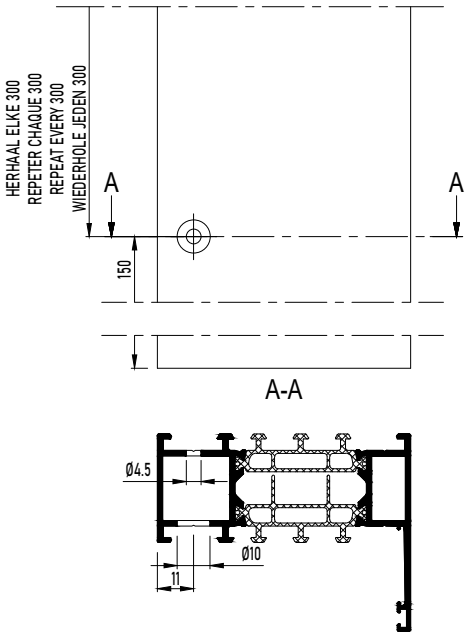
HERHAAL ELKE 300
REPETER CHAQUE 300
REPEAT EVERY 300
WIEDERHOLE JEDEN 300
A
A
150
A-A
Ø4.5
Ø10
11

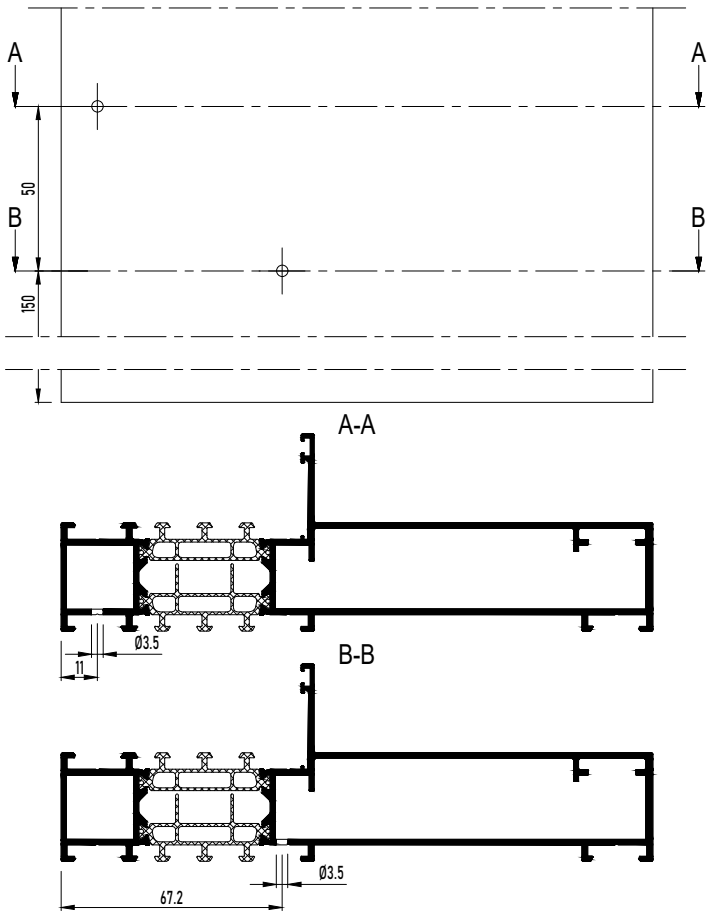
A
A
B
B
50
150
A-A
Ø3.5
11
B-B
Ø3.5
67.2

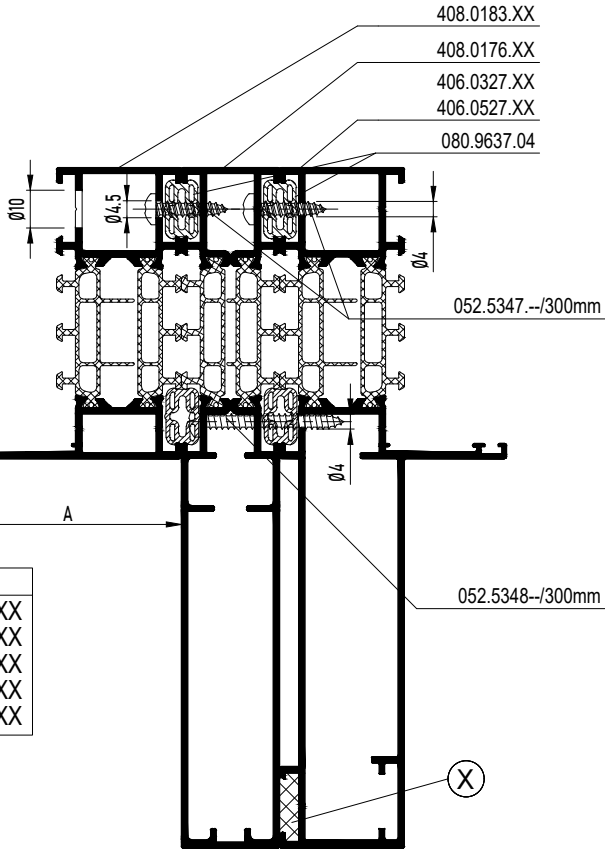

Masterline 8

A	
53mm	408.0136.XX
60mm	408.0183.XX
70mm	408.0160.XX
80mm	408.0125.XX
90mm	408.0169.XX

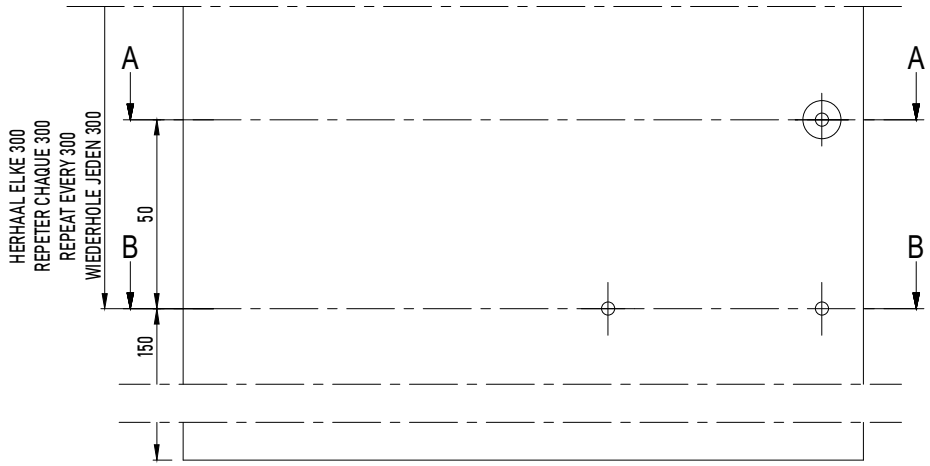

A-A (MASTERPATIO)

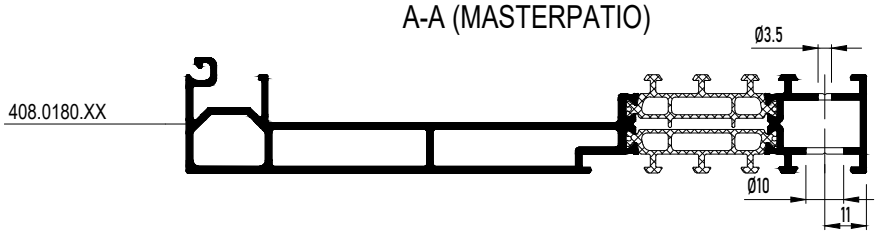

B-B (MASTERLINE)

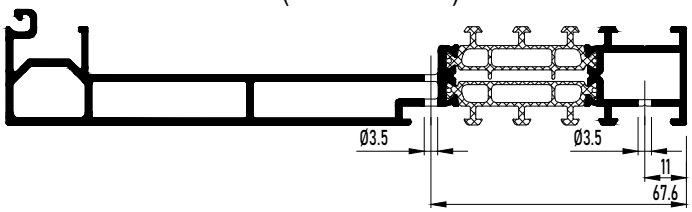

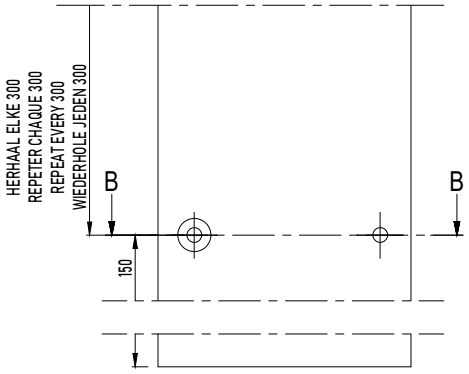
HERHAAL ELKE 300
REPETER CHAQUE 300
REPEAT EVERY 300
WIEDERHOLE JEDEN 300
B
B
150

A-A

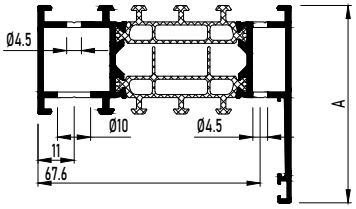
Ø4.5
Ø10
Ø4.5
11
67.6
A

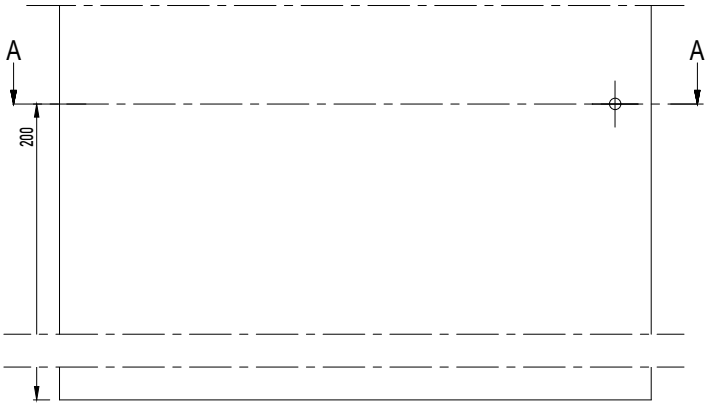
A
A
200

A-A

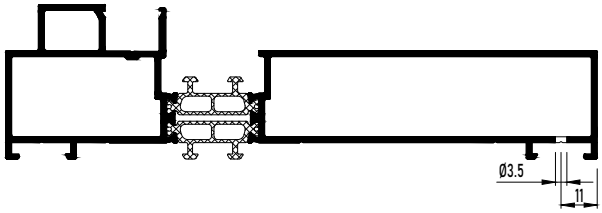
Ø3.5
11

Masterline 8

A		*
53mm	408.0136.XX	052.5321.--
60mm	408.0183.XX	052.5348.--
70mm	408.0160.XX	052.5314.--
80mm	408.0125.XX	052.5323.--
90mm	408.0169.XX	052.5306.--

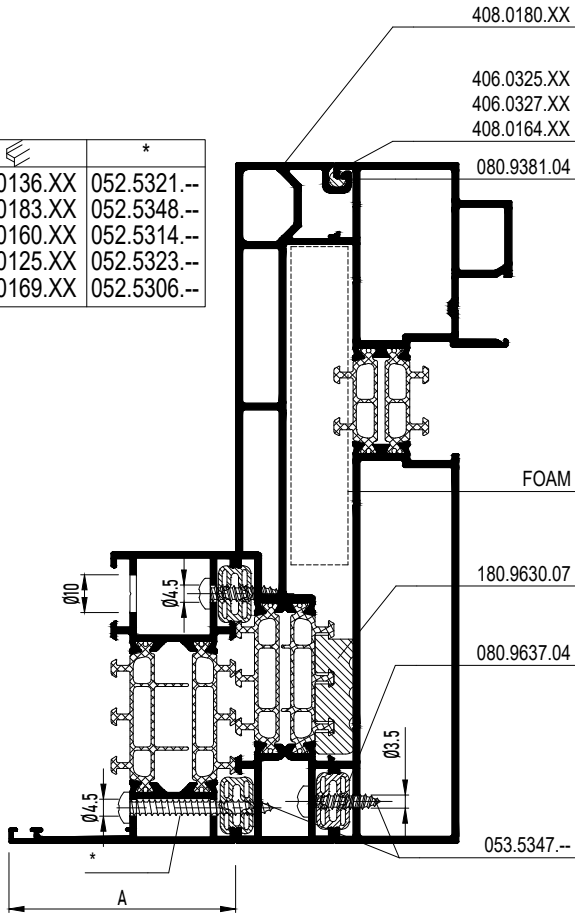



A-A

Masterline 8

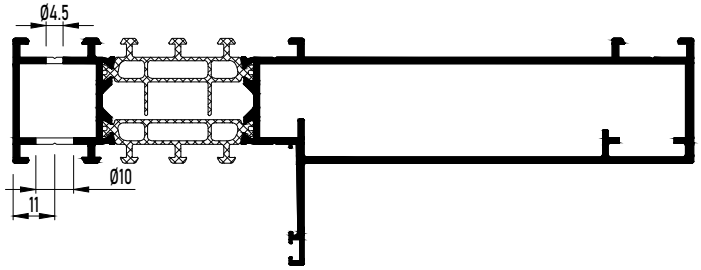


HERHAAL ELKE 300
REPETER CHAQUE 300
REPEAT EVERY 300
WIEDERHOLE JEDEN 300
A
A
150

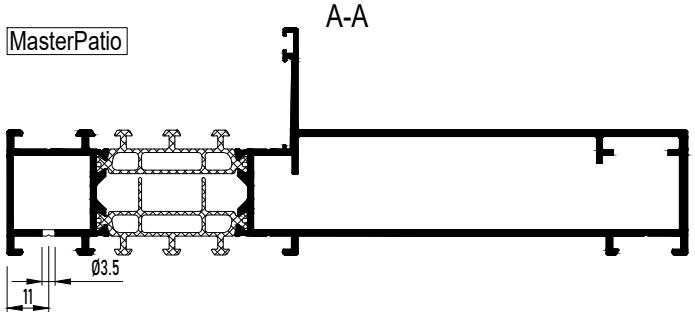
A-A
MasterPatio
Ø3.5
11

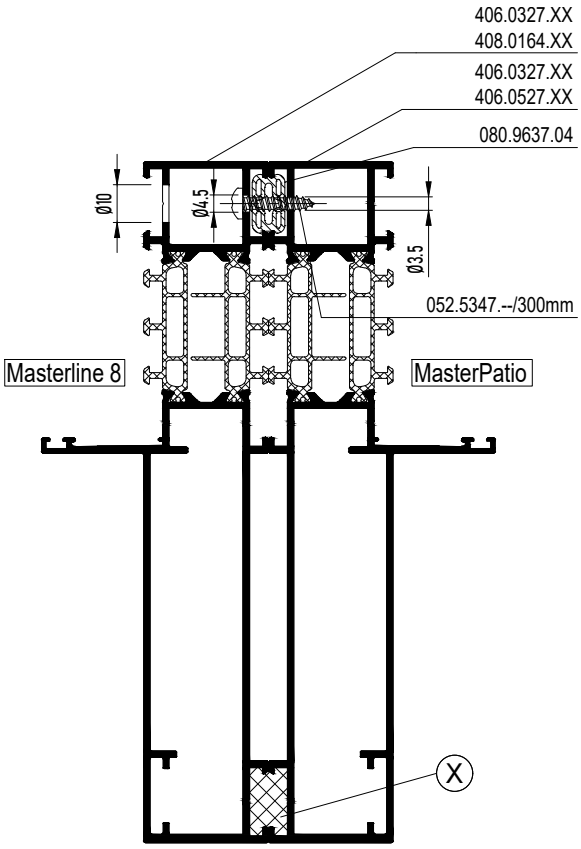
406.0327.XX
408.0164.XX
406.0327.XX
406.0527.XX
080.9637.04
Ø10
Ø4.5
Ø3.5
052.5347.--/300mm
Masterline 8
MasterPatio
X

CORNER CONNECTION

GLUE INJECTION + CORNER CONNECTION 197.F900.00

MASTERLINE 8-Fu

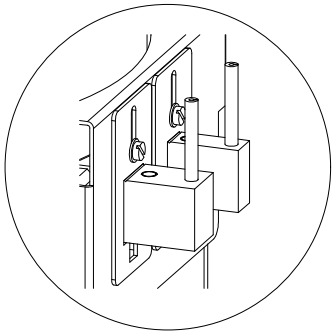

ALGEMEEN PRINCIPE
GENERAL PRINCIPE
GENERAL PRINCIPLE
ALLGEMEIN PRINZIP



A

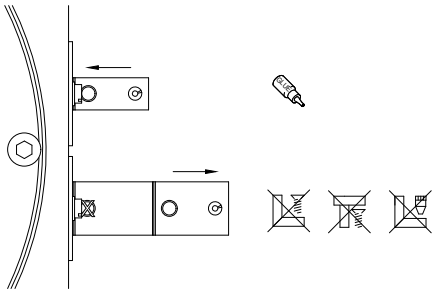



B

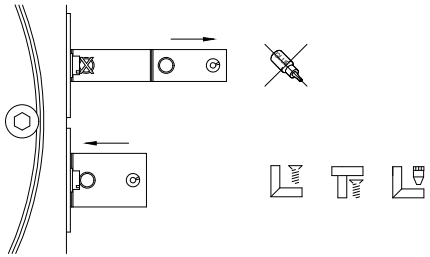

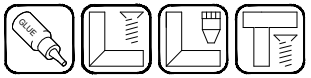

A + B

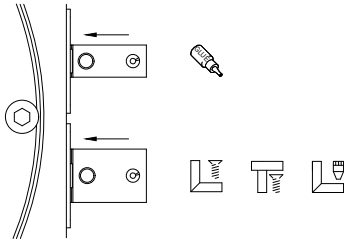

CORNER CONNECTION

GLUE INJECTION + CORNER CONNECTION 197.F900.00

MASTERLINE 8-Fu

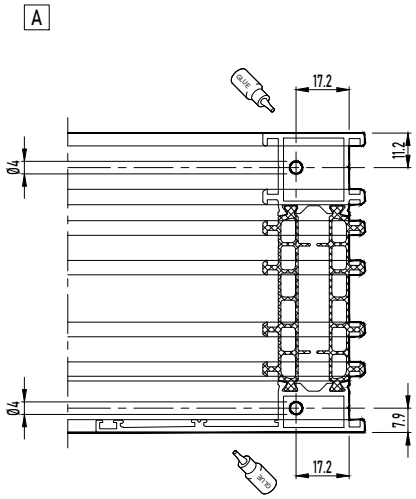

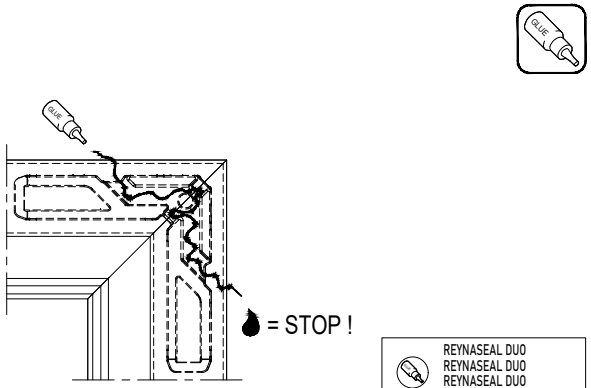

CORNER CONNECTION

GLUE INJECTION + CORNER CONNECTION 197.F900.00

MASTERLINE 8-Fu

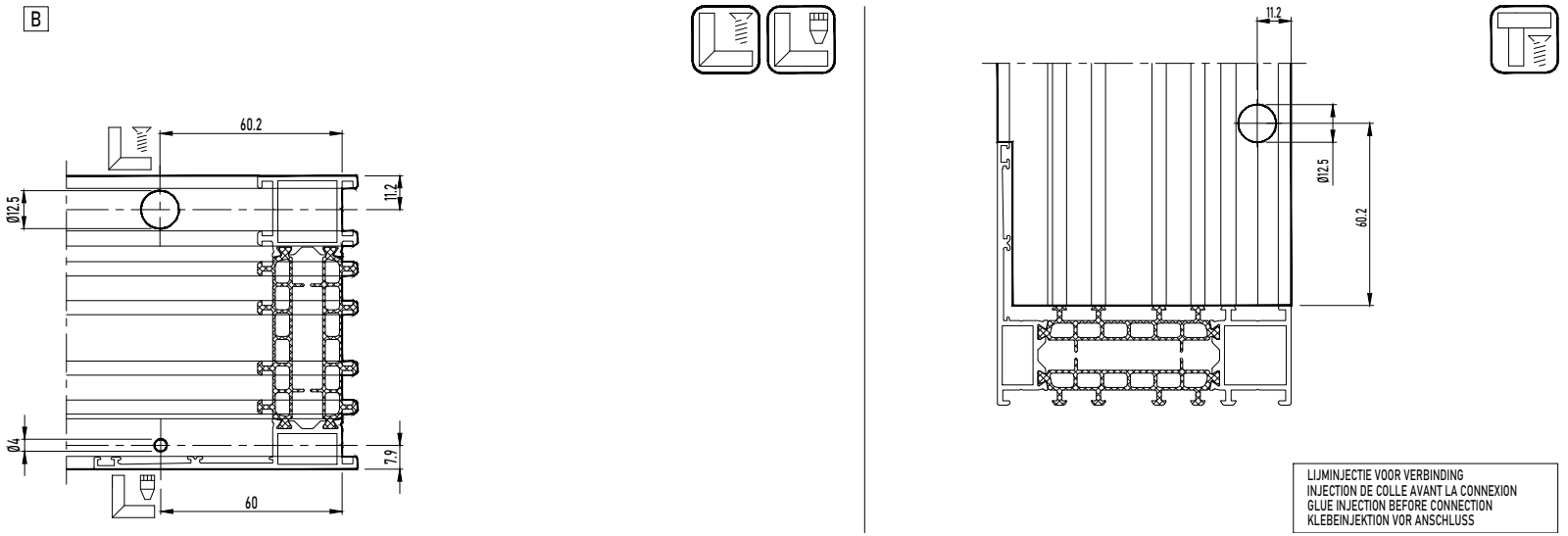

CORNER CONNECTION

GLUE INJECTION + CORNER CONNECTION 197.F900.00

MASTERLINE 8-Fu

A + B

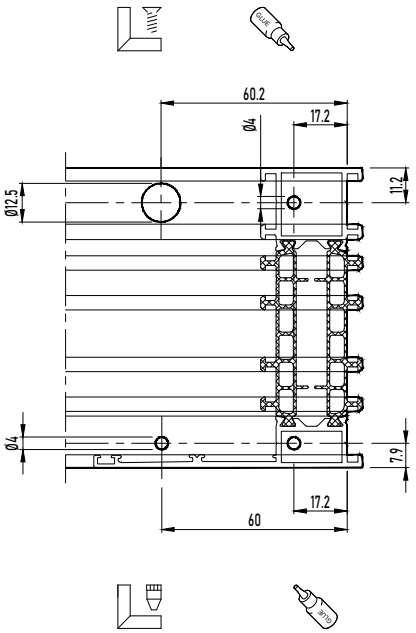

Aanpassing diameter: zie handleiding 197.F900.00
Modification diamètre: voir manuel 197.F900.00
Change size diameter: see manual 197.F900.00
Wechsel Durchmesser: siehe Gebrauchsanweisung 197.F900.00

MONTAGEVOLGORDE L 'ORDRE DE MONTAGE THE ORDER OF ASSEMBLY MONTAGEREIHENFOLGE	1 2 3 .

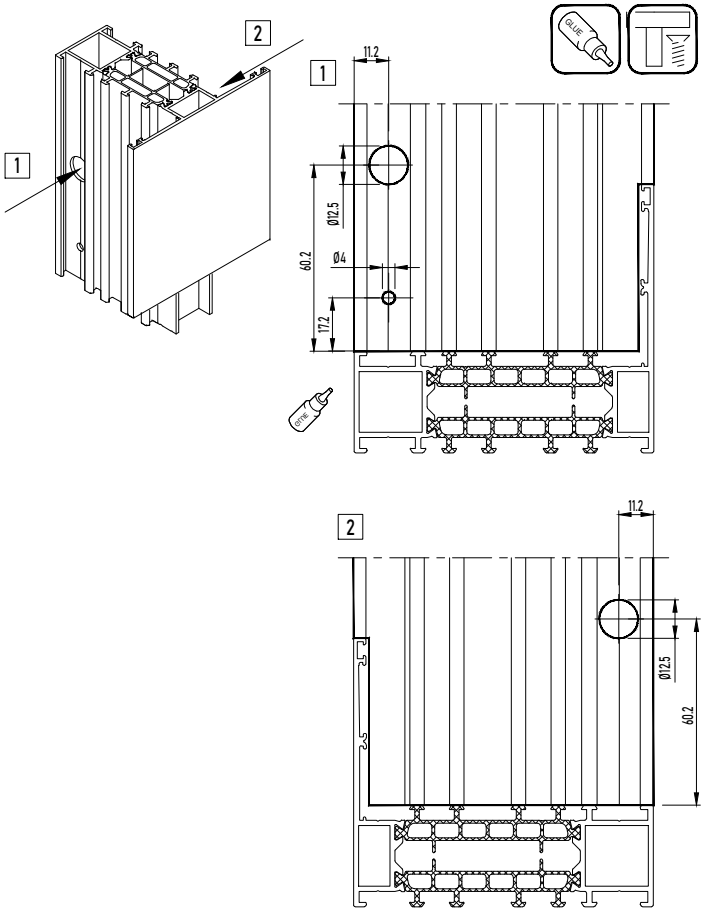

LIJMINJECTIE NA VERBINDING
INJECTION DE COLLE APRÈS LA CONNEXION
GLUE INJECTION AFTER CONNECTION
KLEBEINJEKTION NACH DEM ANSCHLUSS

CORNER CONNECTION VENT

SCREW CORNER CLEAT ADJUSTABLE VENT

MASTERLINE 8-Fu

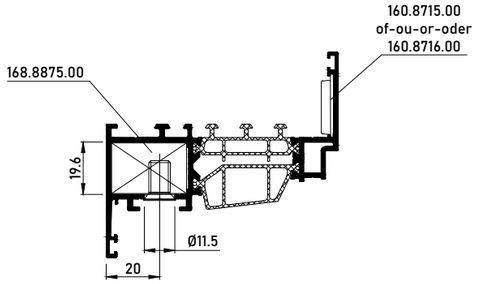

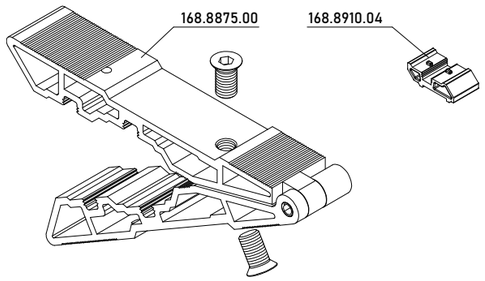

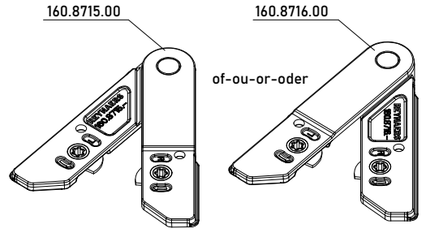

408.0102.XX
...

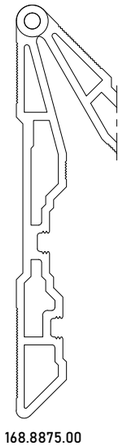

168.8875.00

408.0192.XX
...

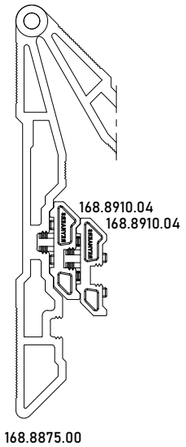

168.8875.00

408.0112.XX
...

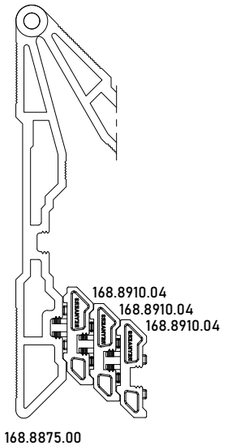

168.8875.00

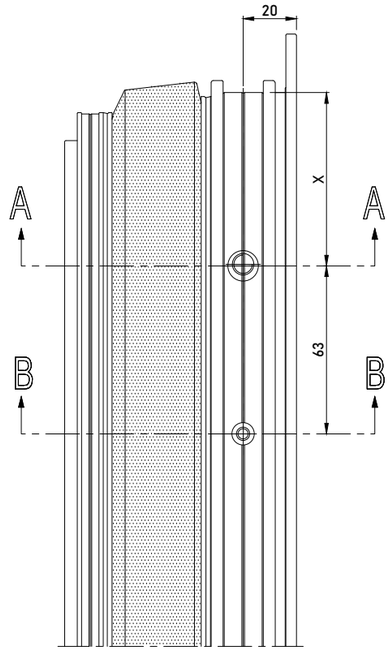

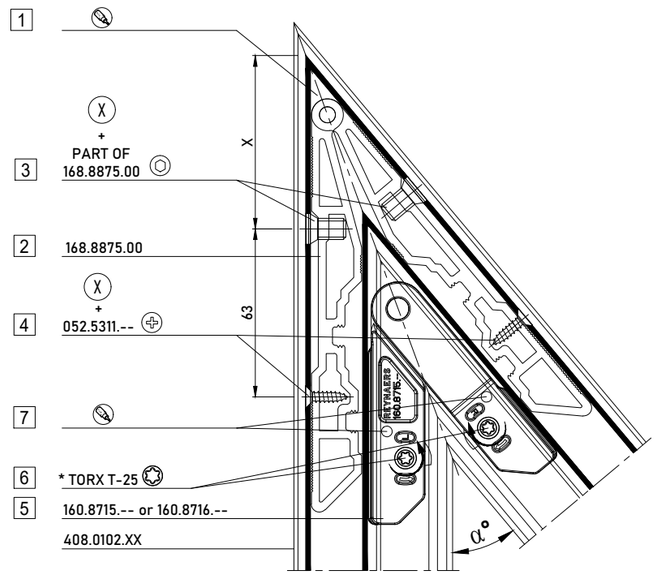

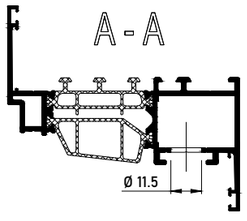

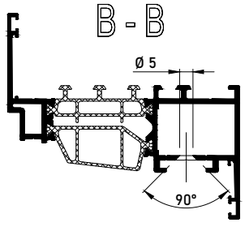

	408.0102.XX	408.0292.XX
	508.0102.XX	508.0292.XX
	408.0192.XX	408.0212.XX
	508.0192.XX	508.0212.XX
	408.0112.XX	408.0902.XX
	508.0112.XX	508.0902.XX
	508.0592.XX	408.0992.XX
	408.0266.XX	508.0992.XX
	408.0202.XX	408.0912.XX
	508.0202.XX	508.0912.XX

168.8875.00 + 168.8910.04

	α	X		β	X
MIN	75°	53.5	MAX	105°	49.4
	80°	52.7		100°	50.0
	85°	51.9		95°	50.5
	90°	51.2		90°	51.2
	95°	50.5		85°	51.9
	100°	50.0		80°	52.7
	105°	49.4		75°	53.5
	110°	48.9		70°	54.5
	115°	48.4		65°	55.6
	120°	47.9		60°	56.8
	125°	47.5		55°	58.3
	130°	47.1		50°	60.0
MAX	135°	46.7	MIN	45°	62.1

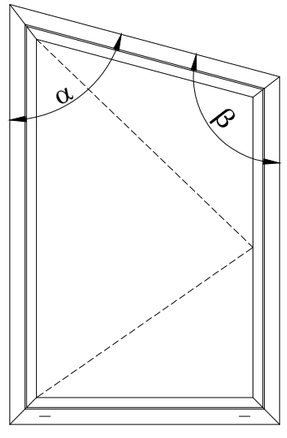

ARTIKELNUMMERS PER PROFIEL: RAADPLEEG HOOFDSTUK C
NUMÉROS DES ARTICLES PAR PROFIL: CONSULTEZ CHAPITRE C
ARTICLE NUMBERS BY PROFILE: CONSULT CHAPTER C
ARTIKEL REFERENZEN PRO PROFIL: SIEHE KAPITEL C

MONTAGEVOLGORDE
L'ORDRE DE MONTAGE
THE ORDER OF ASSEMBLY
MONTAGEREIHENFOLGE
1 2 3 .

REYNASEAL DUO
REYNASEAL DUO
REYNASEAL DUO
REYNASEAL DUO

DICHTINGSMIDDEL
MATIERE D'ETANCHEITE
SEALING AGENT
ABDICHTUNG

* SIMULTAAN AANSCHROEVEN !
* VISSER SIMULTANÉ !
* SCREW SIMULTANEOUSLY !
* SIMULTAN ANSCHRAUBEN !

CORNER CONNECTION VENT LANDSCAPE PIVOT DOOR

CORNER CONNECTION VENT

MASTERLINE 8-Fu

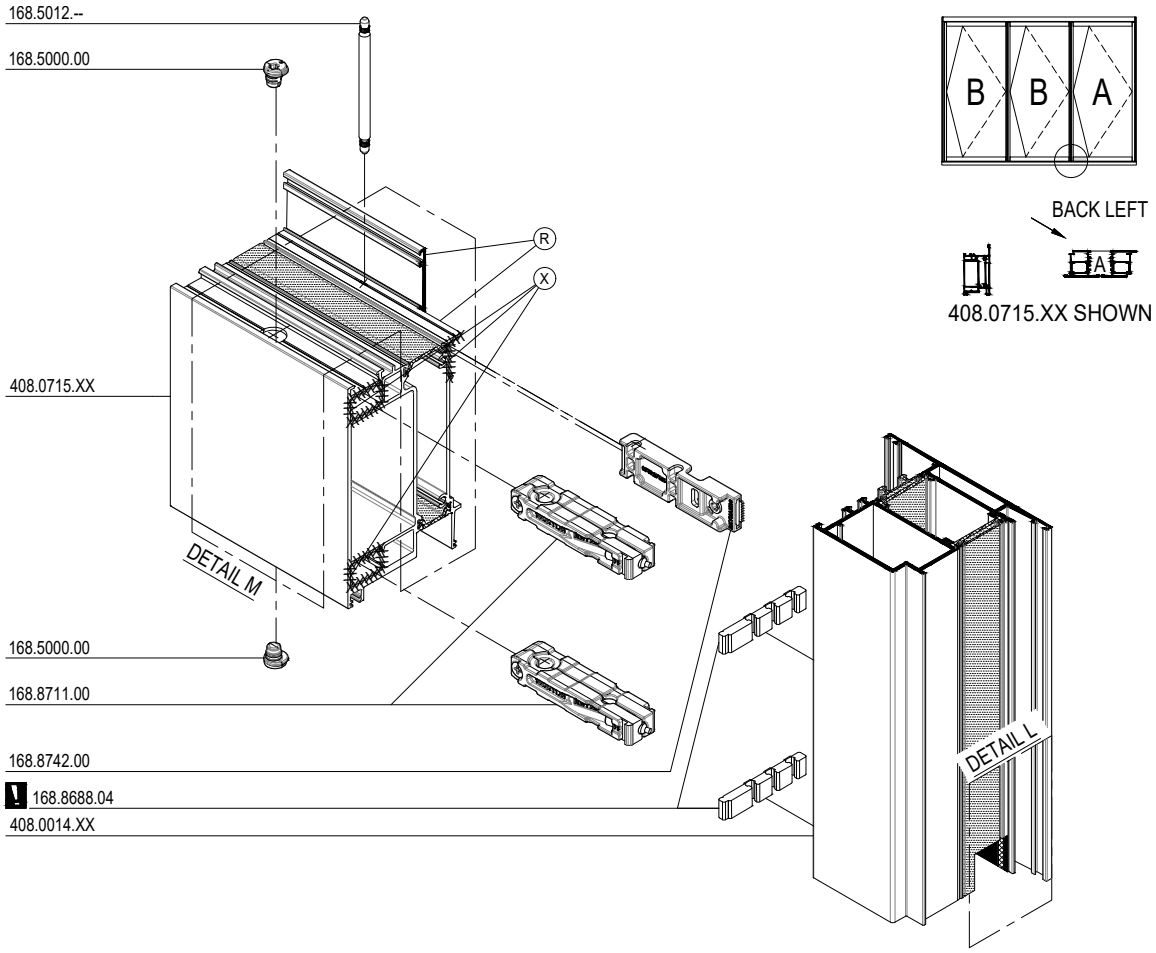

BACK LEFT

408.0715.XX SHOWN

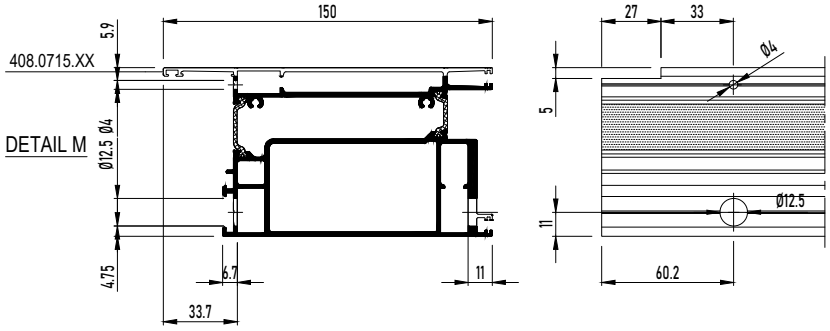

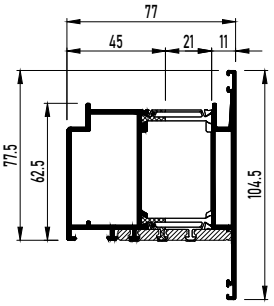

DETAIL L

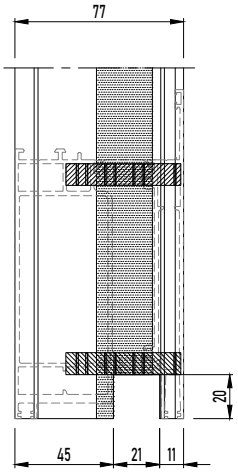

Plaats 168.8688.04 gelijk met beide uiteinden van T- verbinder
Placer 168.8688.04 en affleurement avec les deux extrémités du jonction-T
Place 168.8688.04 flush with both ends of the T-bracket
Platzieren 168.8688.04 bündig mit den beiden Enden des T-verbinder

X DICHTINGSMIDDEL
MATIERE D'ETANCHEITE
SEALING AGENT
ABDICHTUNG

R REYNAPROTECTOR
REYNAPROTECTOR
REYNAPROTECTOR
REYNAPROTECTOR

BIJKOMENDE INFO VOORBEREIDING/VERWERKING -> ZIE HOOFDSTUK F 'VERWERKINGSVOORSCHRIFTEN' !
INFO COMPLEMENTAIRE PREPARATION/USINAGE -> VOIR CHAPITRE F 'PRESCRIPTIONS DE MISE EN OEUVRE' !
ADDITIONAL INFO PREPARATION/PROCESSING -> SEE CHAPTER F 'PROCESSING DATA' !
ZUSAETZLICHE INFO VORBEREITUNG/VERARBEITUNG -> SIEHE KAPITEL F 'VERARBEITUNGSVORSCHRIFTEN' !

CORNER CONNECTION VENT LANDSCAPE PIVOT DOOR

CORNER CONNECTION VENT

MASTERLINE 8-Fu

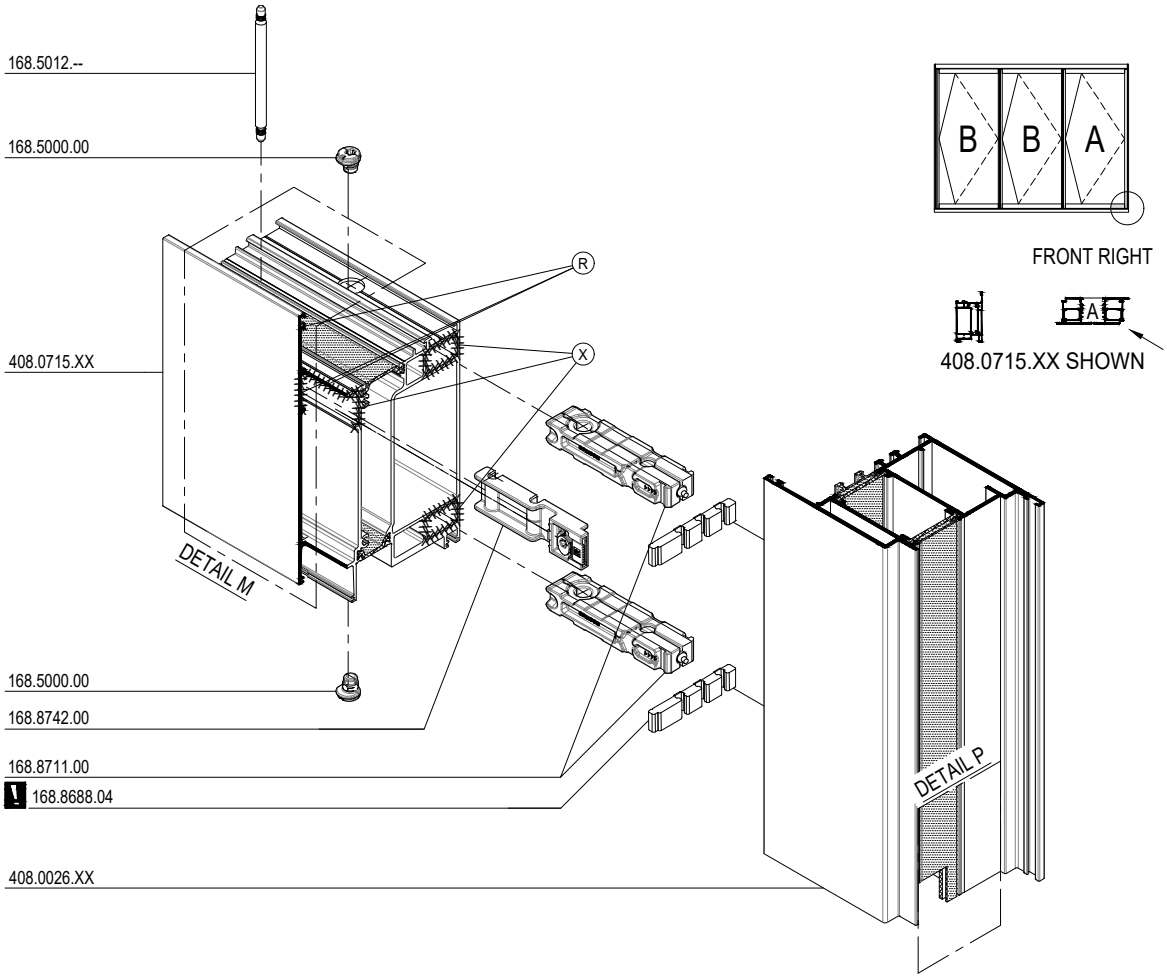

FRONT RIGHT

408.0715.XX SHOWN

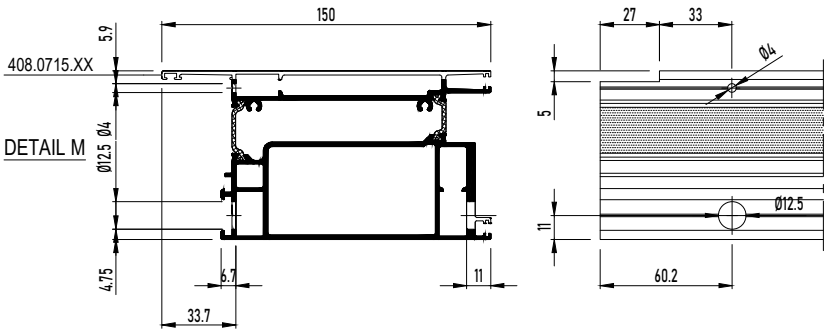

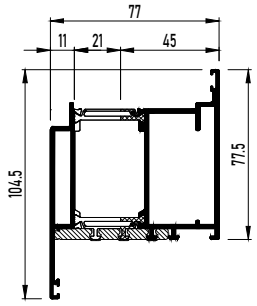

DETAIL P

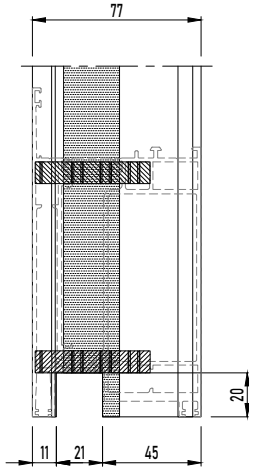

Plaats 168.8688.04 gelijk met beide uiteinden van T- verbinder
Placer 168.8688.04 en affleurement avec les deux extrémités du jonction-T
Place 168.8688.04 flush with both ends of the T-bracket
Platzieren 168.8688.04 bündig mit den beiden Enden des T-verbinder

X DICHTINGSMIDDEL
MATIERE D'ETANCHEITE
SEALING AGENT
ABDICHTUNG

R REYNAPROTECTOR
REYNAPROTECTOR
REYNAPROTECTOR
REYNAPROTECTOR

BIJKOMENDE INFO VOORBEREIDING/VERWERKING -> ZIE HOOFDSTUK F 'VERWERKINGSVOORSCHRIFTEN' !
INFO COMPLEMENTAIRE PREPARATION/USINAGE -> VOIR CHAPITRE F 'PRESCRIPTIONS DE MISE EN OEUVRE' !
ADDITIONAL INFO PREPARATION/PROCESSING -> SEE CHAPTER F 'PROCESSING DATA' !
ZUSAETZLICHE INFO VORBEREITUNG/VERARBEITUNG -> SIEHE KAPITEL F 'VERARBEITUNGSVORSCHRIFTEN' !

CORNER CONNECTION VENT LANDSCAPE PIVOT DOOR

CORNER CONNECTION VENT

MASTERLINE 8-Fu

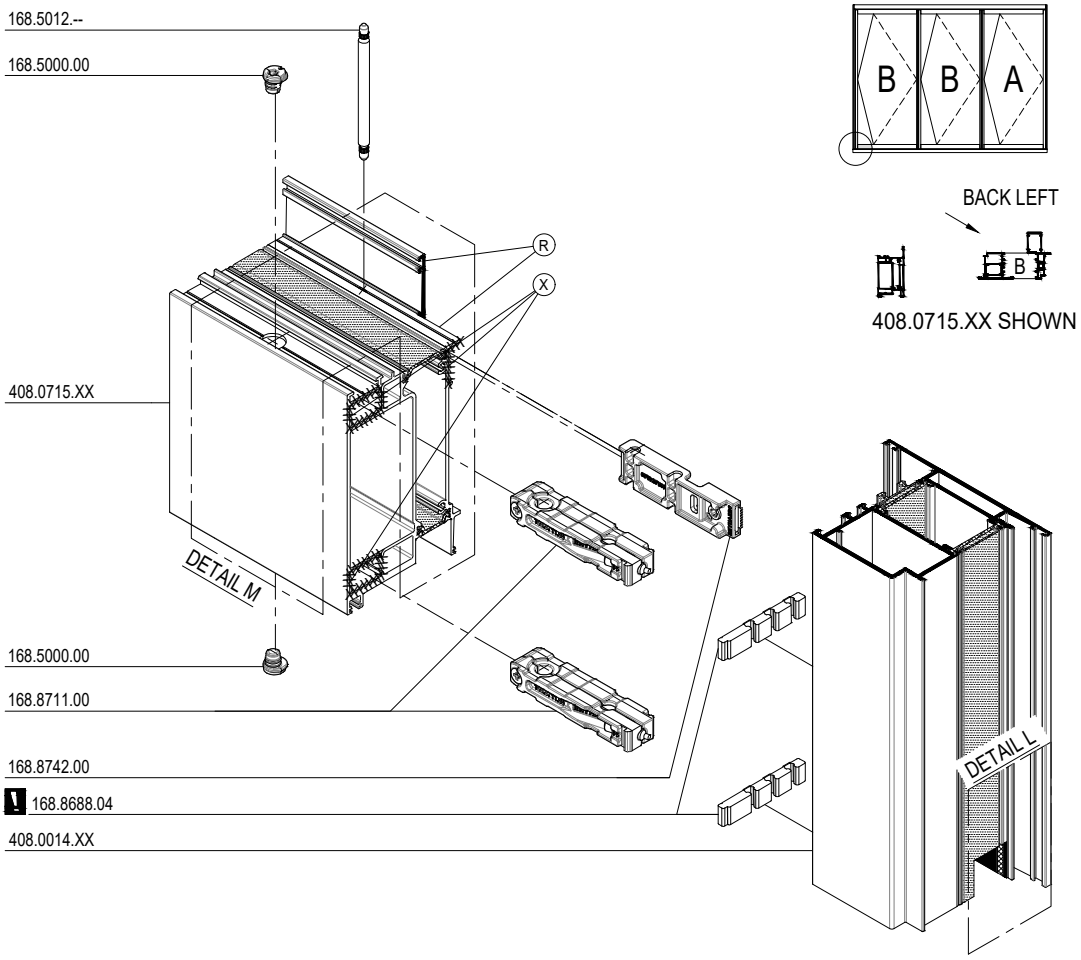

BACK LEFT

408.0715.XX SHOWN

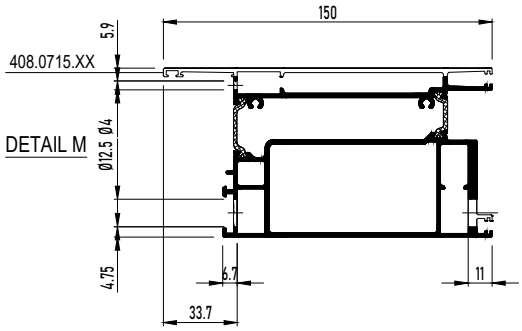

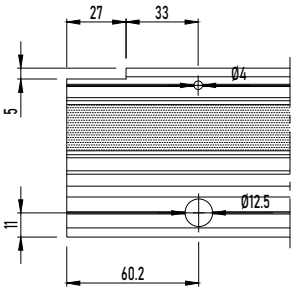

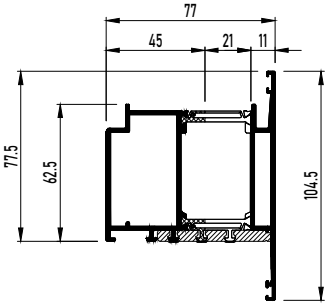

DETAIL L

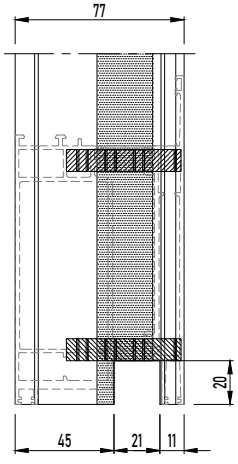

!	Plaats 168.8688.04 gelijk met beide uiteinden van T- verbinder Placer 168.8688.04 en affleurement avec les deux extrémités du jonction-T Place 168.8688.04 flush with both ends of the T-bracket Platzieren 168.8688.04 bündig mit den beiden Enden des T-verbinder

X	DICHTINGSMIDDEL MATIERE D'ETANCHEITE SEALING AGENT ABDICHTUNG
R	REYNAPROTECTOR REYNAPROTECTOR REYNAPROTECTOR REYNAPROTECTOR

BIJKOMENDE INFO VOORBEREIDING/VERWERKING -> ZIE HOOFDSTUK F 'VERWERKINGSVOORSCHRIFTEN' !
INFO COMPLEMENTAIRE PREPARATION/USINAGE -> VOIR CHAPITRE F 'PRESCRIPTIONS DE MISE EN OEUVRE' !
ADDITIONAL INFO PREPARATION/PROCESSING -> SEE CHAPTER F 'PROCESSING DATA' !
ZUSAETZLICHE INFO VORBEREITUNG/VERARBEITUNG -> SIEHE KAPITEL F 'VERARBEITUNGSVORSCHRIFTEN' !

CORNER CONNECTION VENT LANDSCAPE PIVOT DOOR

CORNER CONNECTION VENT

MASTERLINE 8-Fu

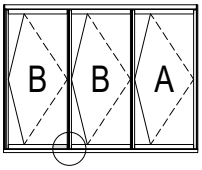

FRONT RIGHT



408.0715.XX SHOWN

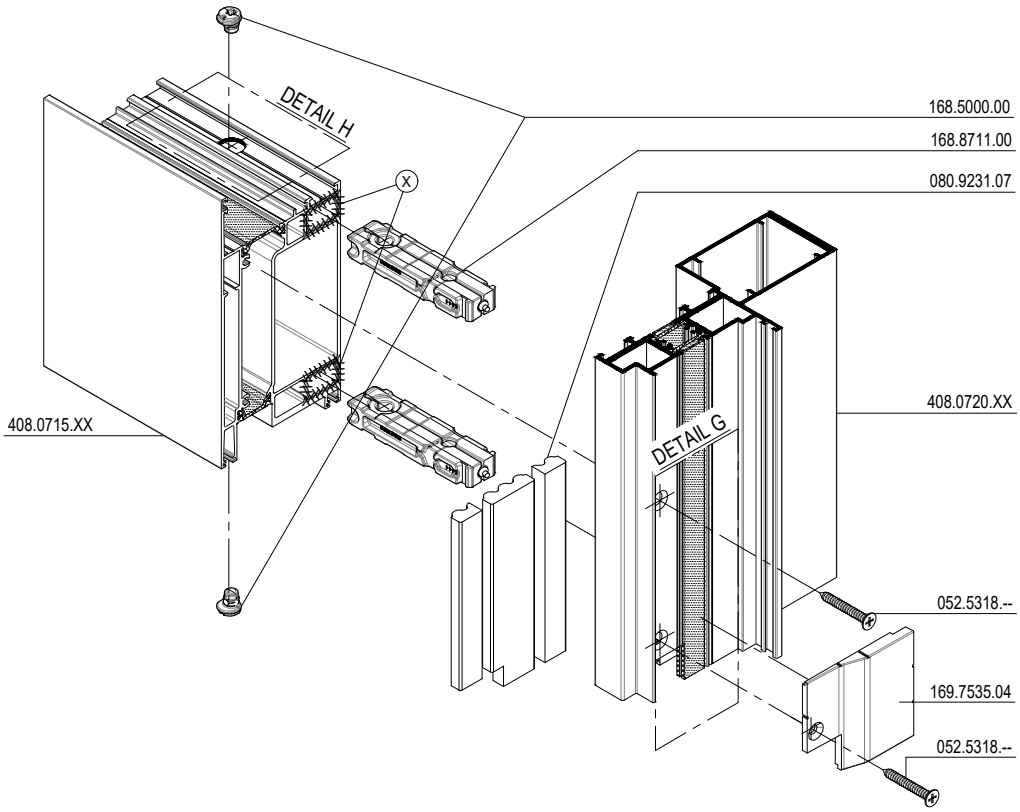

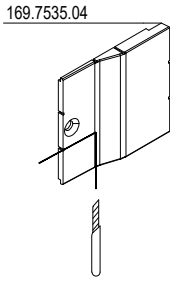

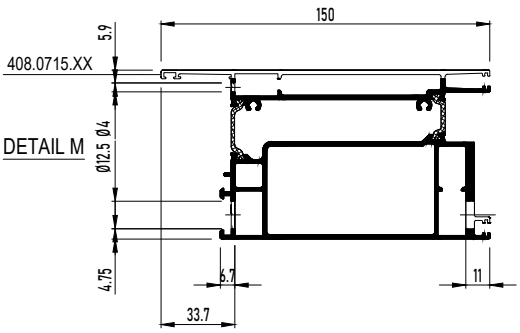

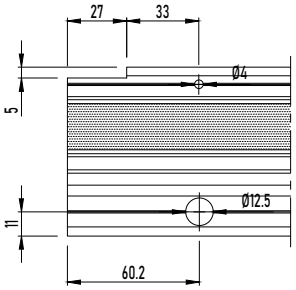

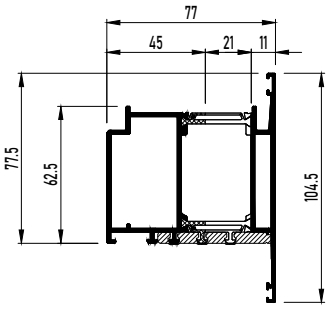

DETAIL L

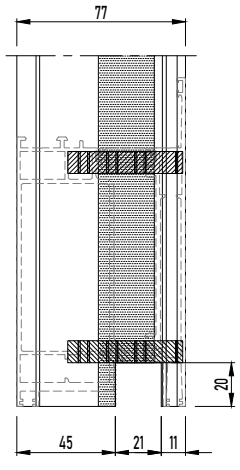

X DICHTINGSMIDDEL
MATIERE D'ETANCHEITE
SEALING AGENT
ABDICHTUNG

BIJKOMENDE INFO VOORBEREIDING/VERWERKING -> ZIE HOOFDSTUK F 'VERWERKINGSVOORSCHRIFTEN' !
INFO COMPLEMENTAIRE PREPARATION/USINAGE -> VOIR CHAPITRE F 'PRESCRIPTIONS DE MISE EN OEUVRE' !
ADDITIONAL INFO PREPARATION/PROCESSING -> SEE CHAPTER F 'PROCESSING DATA' !
ZUSAETZLICHE INFO VORBEREITUNG/VERARBEITUNG -> SIEHE KAPITEL F 'VERARBEITUNGSVORSCHRIFTEN' !

CORNER CONNECTION VENT LANDSCAPE PIVOT DOOR

CORNER CONNECTION VENT

MASTERLINE 8-Fu

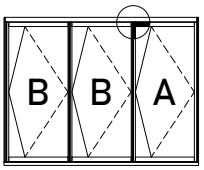

BACK LEFT



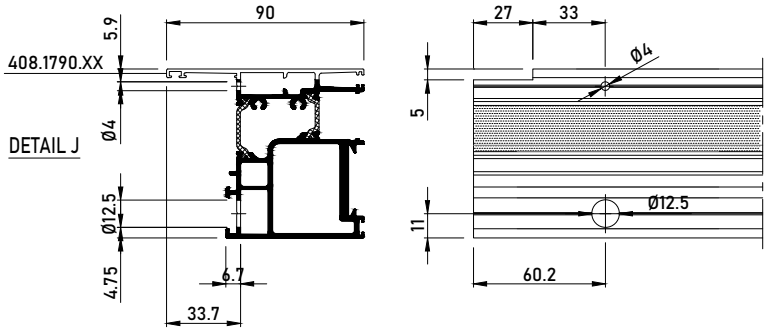

Plaats 168.8688.04 gelijk met beide uiteinden van T- verbinder
Placer 168.8688.04 en affleurement avec les deux extrémités du jonction-T
Place 168.8688.04 flush with both ends of the T-bracket
Platzieren 168.8688.04 bündig mit den beiden Enden des T-verbinder

X DICHTINGSMIDDEL
MATIERE D'ETANCHEITE
SEALING AGENT
ABDICHTUNG

R **REYNAPROTECTOR**
REYNAPROTECTOR
REYNAPROTECTOR
REYNAPROTECTOR

BIJKOMENDE INFO VOORBEREIDING/VERWERKING -> ZIE HOOFDSTUK F 'VERWERKINGSVOORSCHRIFTEN' !
INFO COMPLEMENTAIRE PREPARATION/USINAGE -> VOIR CHAPITRE F 'PRESCRIPTIONS DE MISE EN OEUVRE' !
ADDITIONAL INFO PREPARATION/PROCESSING -> SEE CHAPTER F 'PROCESSING DATA' !
ZUSAETZLICHE INFO VORBEREITUNG/VERARBEITUNG -> SIEHE KAPITEL F 'VERARBEITUNGSVORSCHRIFTEN' !

CORNER CONNECTION VENT LANDSCAPE PIVOT DOOR

CORNER CONNECTION VENT

MASTERLINE 8-Fu

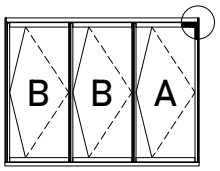

FRONT RIGHT



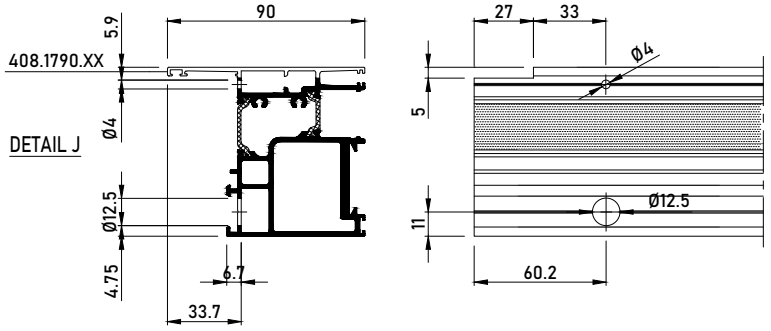

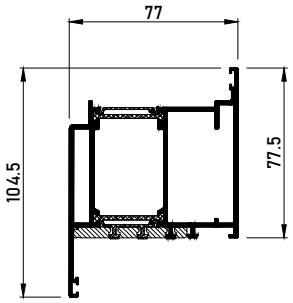

DETAIL N

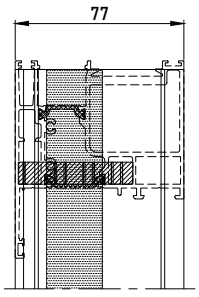

!	Plaats 168.8688.04 gelijk met beide uiteinden van T- verbinder Placer 168.8688.04 en affleurement avec les deux extrémités du jonction-T Place 168.8688.04 flush with both ends of the T-bracket Platzieren 168.8688.04 bündig mit den beiden Enden des T-verbinder

X	DICHTINGSMIDDEL MATIERE D'ETANCHEITE SEALING AGENT ABDICHTUNG
R	**REYNAPROTECTOR** REYNAPROTECTOR REYNAPROTECTOR REYNAPROTECTOR

BOIKOMENDE INFO VOORBEREIDING/VERWERKING -> ZIE HOOFDSTUK F 'VERWERKINGSVOORSCHRIFTEN' !
INFO COMPLEMENTAIRE PREPARATION/USINAGE -> VOIR CHAPITRE F 'PRESCRIPTIONS DE MISE EN OEUVRE' !
ADDITIONAL INFO PREPARATION/PROCESSING -> SEE CHAPTER F 'PROCESSING DATA' !
ZUSAETZLICHE INFO VORBEREITUNG/VERARBEITUNG -> SIEHE KAPITEL F 'VERARBEITUNGSVORSCHRIFTEN' !

CORNER CONNECTION VENT LANDSCAPE PIVOT DOOR

CORNER CONNECTION VENT | 408.1790.XX

MASTERLINE 8-Fu

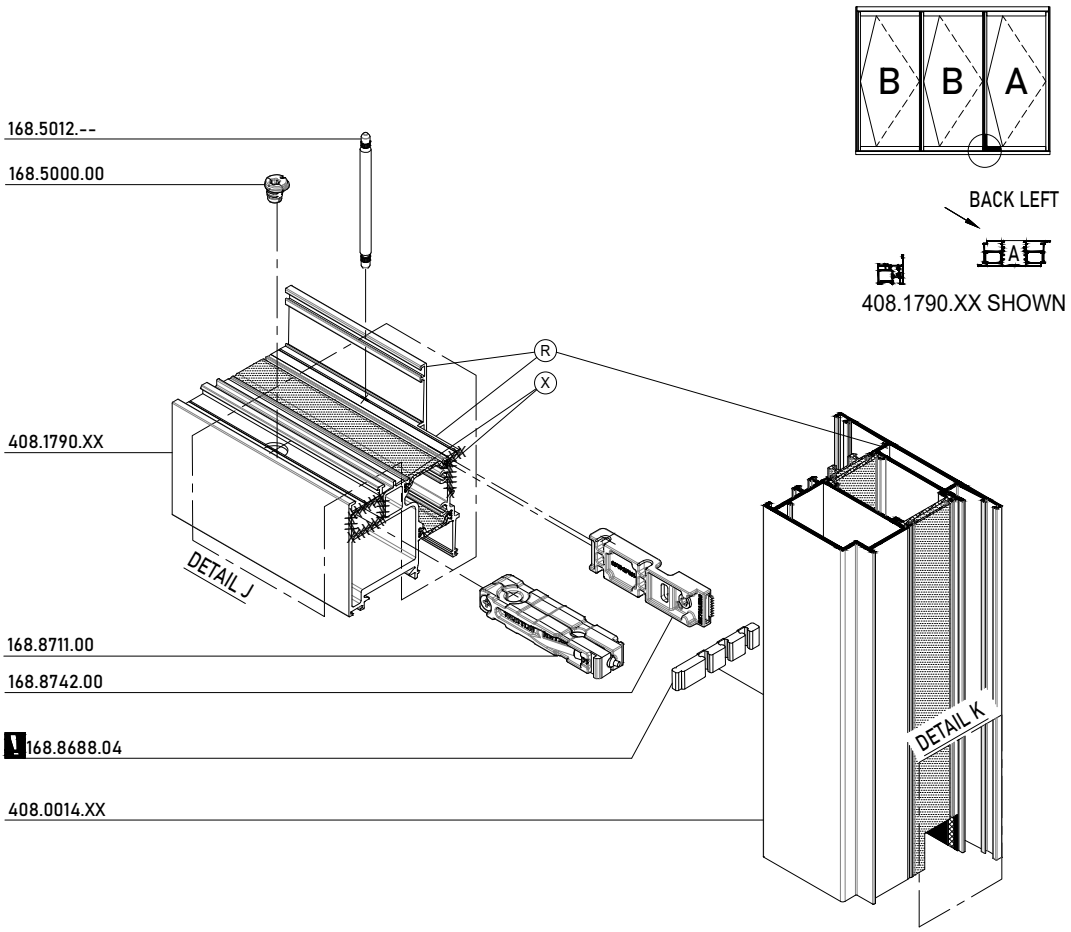

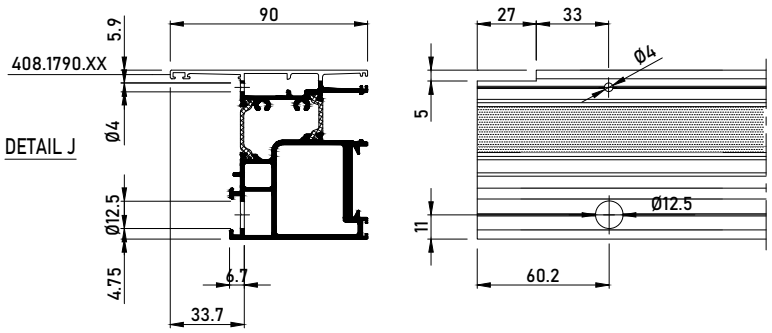

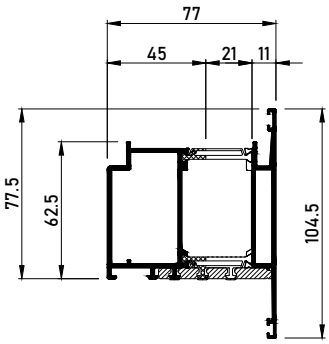

DETAIL K

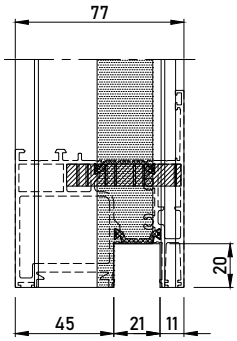

Plaats 168.8688.04 gelijk met beide uiteinden van T- verbinder
Placer 168.8688.04 en affleurement avec les deux extrémités du jonction-T
Place 168.8688.04 flush with both ends of the T-bracket
Platzieren 168.8688.04 bündig mit den beiden Enden des T-verbinder

(X) DICHTINGSMIDDEL
MATIERE D'ETANCHEITE
SEALING AGENT
ABDICHTUNG

(R) REYNAPROTECTOR
REYNAPROTECTOR
REYNAPROTECTOR
REYNAPROTECTOR

BIJKOMENDE INFO VOORBEREIDING/VERWERKING -> ZIE HOOFDSTUK F 'VERWERKINGSVOORSCHRIFTEN' !
INFO COMPLEMENTAIRE PREPARATION/USINAGE -> VOIR CHAPITRE F 'PRESCRIPTIONS DE MISE EN OEUVRE' !
ADDITIONAL INFO PREPARATION/PROCESSING -> SEE CHAPTER F 'PROCESSING DATA' !
ZUSAETZLICHE INFO VORBEREITUNG/VERARBEITUNG -> SIEHE KAPITEL F 'VERARBEITUNGSVORSCHRIFTEN' !

CORNER CONNECTION VENT LANDSCAPE PIVOT DOOR

CORNER CONNECTION VENT | 408.1790.XX

MASTERLINE 8-Fu

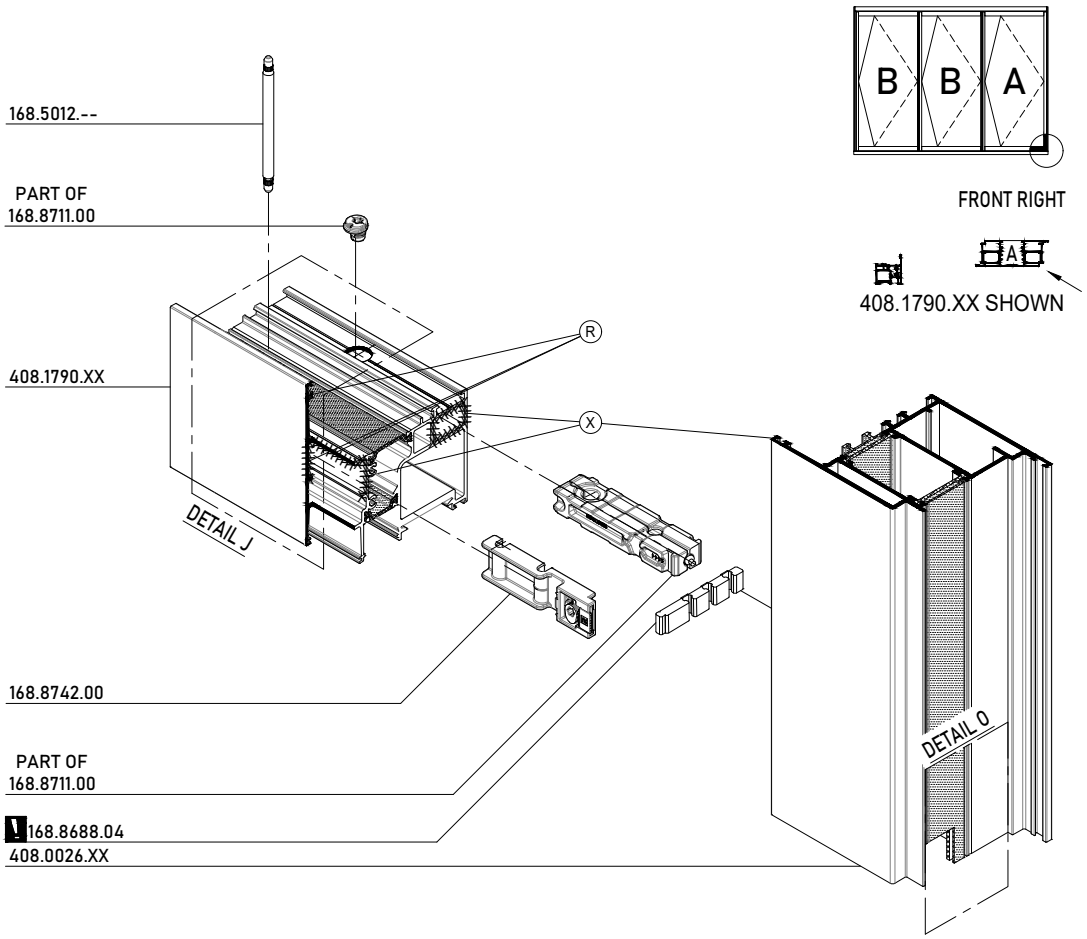

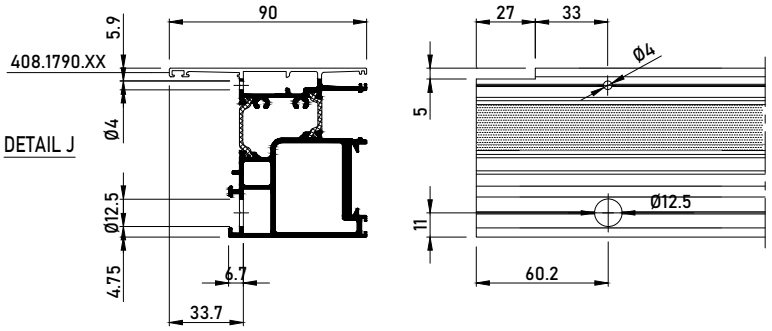

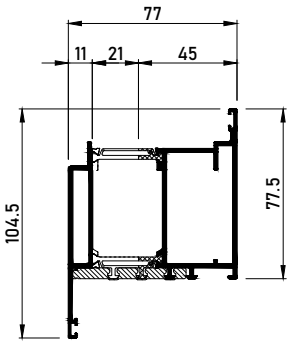

DETAIL 0

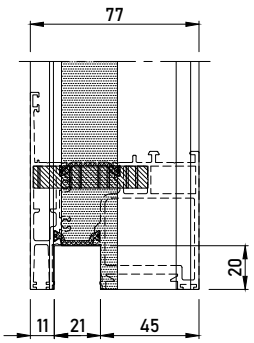

Plaats 168.8688.04 gelijk met beide uiteinden van T- verbinder
Placer 168.8688.04 en affleurement avec les deux extrémités du jonction-T
Place 168.8688.04 flush with both ends of the T-bracket
Platzieren 168.8688.04 bündig mit den beiden Enden des T-verbinder

X DICHTINGSMIDDEL
MATIERE D'ETANCHEITE
SEALING AGENT
ABDICHTUNG

R REYNAPROTECTOR
REYNAPROTECTOR
REYNAPROTECTOR
REYNAPROTECTOR

BIJKOMENDE INFO VOORBEREIDING/VERWERKING -> ZIE HOOFDSTUK F 'VERWERKINGSVOORSCHRIFTEN' !
INFO COMPLEMENTAIRE PREPARATION/USINAGE -> VOIR CHAPITRE F 'PRESCRIPTIONS DE MISE EN OEUVRE' !
ADDITIONAL INFO PREPARATION/PROCESSING -> SEE CHAPTER F 'PROCESSING DATA' !
ZUSAETZLICHE INFO VORBEREITUNG/VERARBEITUNG -> SIEHE KAPITEL F 'VERARBEITUNGSVORSCHRIFTEN' !

CORNER CONNECTION VENT LANDSCAPE PIVOT DOOR

CORNER CONNECTION VENT

MASTERLINE 8-Fu

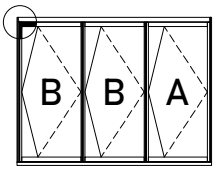

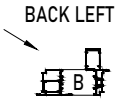

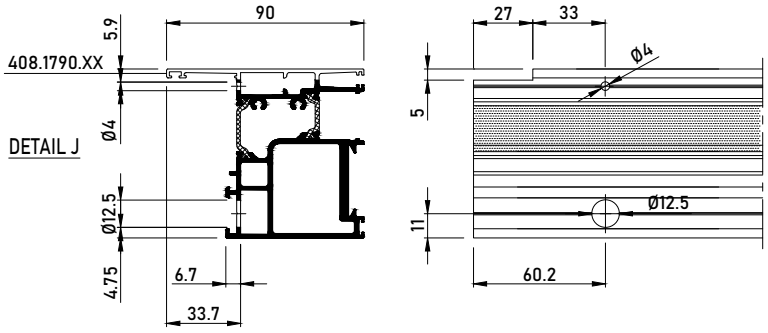

Plaats 168.8688.04 gelijk met beide uiteinden van T- verbinder
Placer 168.8688.04 en affleurement avec les deux extrémités du jonction-T
Place 168.8688.04 flush with both ends of the T-bracket
Platzieren 168.8688.04 bündig mit den beiden Enden des T-verbinder

X DICHTINGSMIDDEL
MATIERE D'ETANCHEITE
SEALING AGENT
ABDICHTUNG

R REYNAPROTECTOR
REYNAPROTECTOR
REYNAPROTECTOR
REYNAPROTECTOR

BIJKOMENDE INFO VOORBEREIDING/VERWERKING -> ZIE HOOFDSTUK F 'VERWERKINGSVOORSCHRIFTEN' !
INFO COMPLEMENTAIRE PREPARATION/USINAGE -> VOIR CHAPITRE F 'PRESCRIPTIONS DE MISE EN OEUVRE' !
ADDITIONAL INFO PREPARATION/PROCESSING -> SEE CHAPTER F 'PROCESSING DATA' !
ZUSAETZLICHE INFO VORBEREITUNG/VERARBEITUNG -> SIEHE KAPITEL F 'VERARBEITUNGSVORSCHRIFTEN' !

CORNER CONNECTION VENT LANDSCAPE PIVOT DOOR

CORNER CONNECTION VENT

MASTERLINE 8-Fu

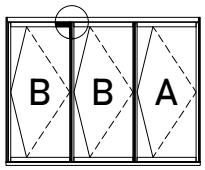

FRONT RIGHT

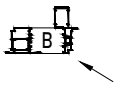

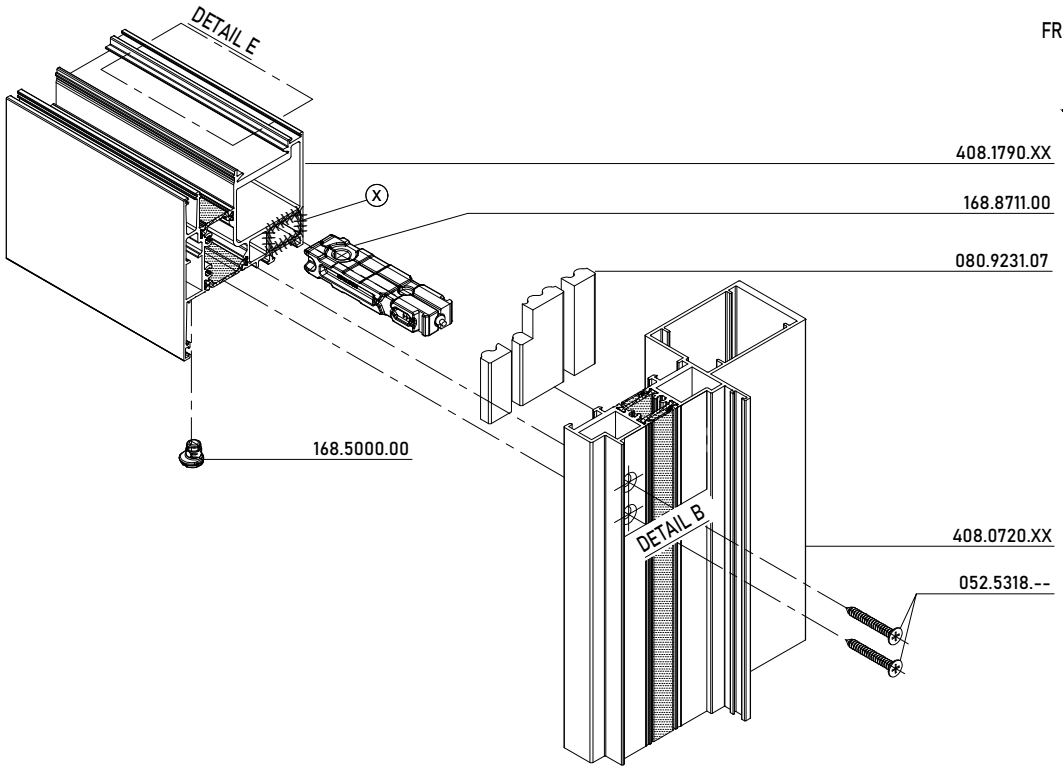

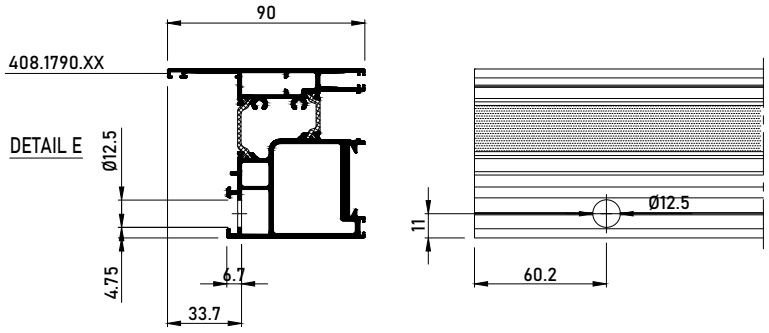

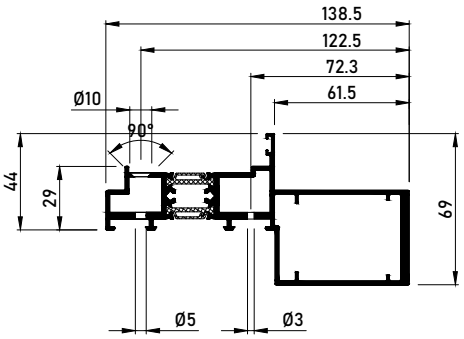

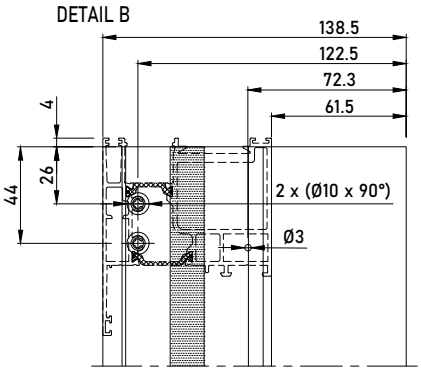

Plaats 168.8688.04 gelijk met beide uiteinden van T- verbinder
Placer 168.8688.04 en affleurement avec les deux extrémités du jonction-T
Place 168.8688.04 flush with both ends of the T-bracket
Platzieren 168.8688.04 bündig mit den beiden Enden des T-verbinder

X DICHTINGSMIDDEL
MATIERE D'ETANCHEITE
SEALING AGENT
ABDICHTUNG

BIJKOMENDE INFO VOORBEREIDING/VERWERKING -> ZIE HOOFDSTUK F 'VERWERKINGSVOORSCHRIFTEN' !
INFO COMPLEMENTAIRE PREPARATION/USINAGE -> VOIR CHAPITRE F 'PRESCRIPTIONS DE MISE EN OEUVRE' !
ADDITIONAL INFO PREPARATION/PROCESSING -> SEE CHAPTER F 'PROCESSING DATA' !
ZUSAETZLICHE INFO VORBEREITUNG/VERARBEITUNG -> SIEHE KAPITEL F 'VERARBEITUNGSVORSCHRIFTEN' !

CORNER CONNECTION VENT PIVOT DOOR XL

CORNER CONNECTION VENT

MASTERLINE 8-Fu

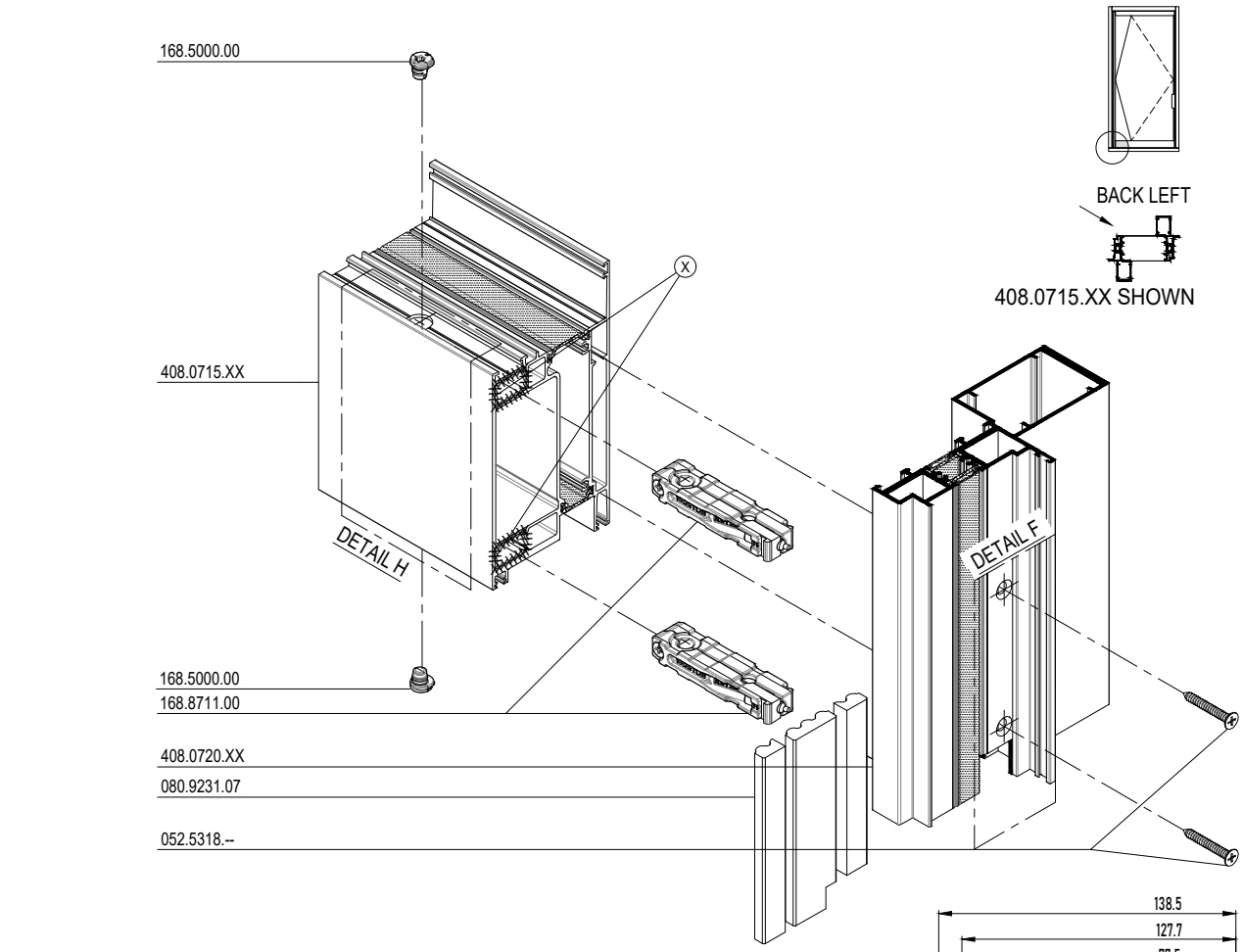

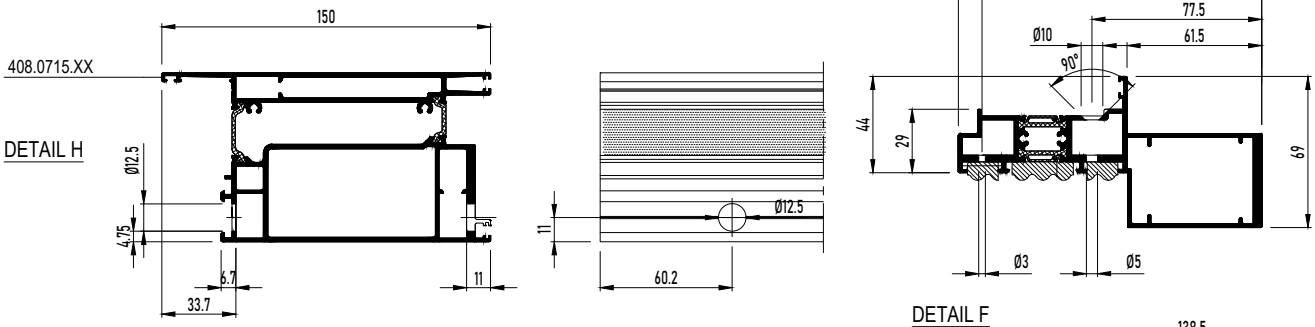

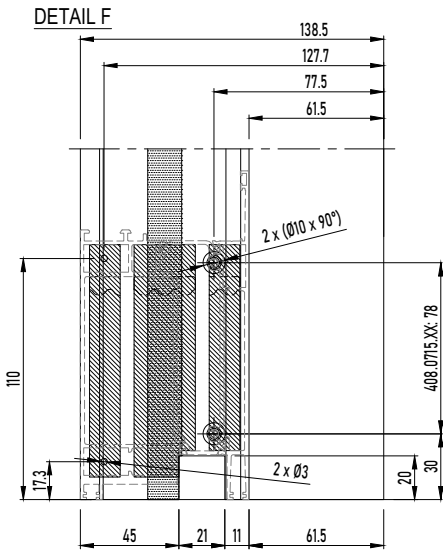

X DICHTINGSMIDDEL
MATIERE D'ETANCHEITE
SEALING AGENT
ABDICHTUNG

BIJKOMENDE INFO VOORBEREIDING/VERWERKING -> ZIE HOOFDSTUK F 'VERWERKINGSVOORSCHRIFTEN' !
INFO COMPLEMENTAIRE PREPARATION/USINAGE -> VOIR CHAPITRE F 'PRESCRIPTIONS DE MISE EN OEUVRE' !
ADDITIONAL INFO PREPARATION/PROCESSING -> SEE CHAPTER F 'PROCESSING DATA' !
ZUSAETZLICHE INFO VORBEREITUNG/VERARBEITUNG -> SIEHE KAPITEL F 'VERARBEITUNGSVORSCHRIFTEN' !

CORNER CONNECTION VENT PIVOT DOOR XL

CORNER CONNECTION VENT

MASTERLINE 8-Fu

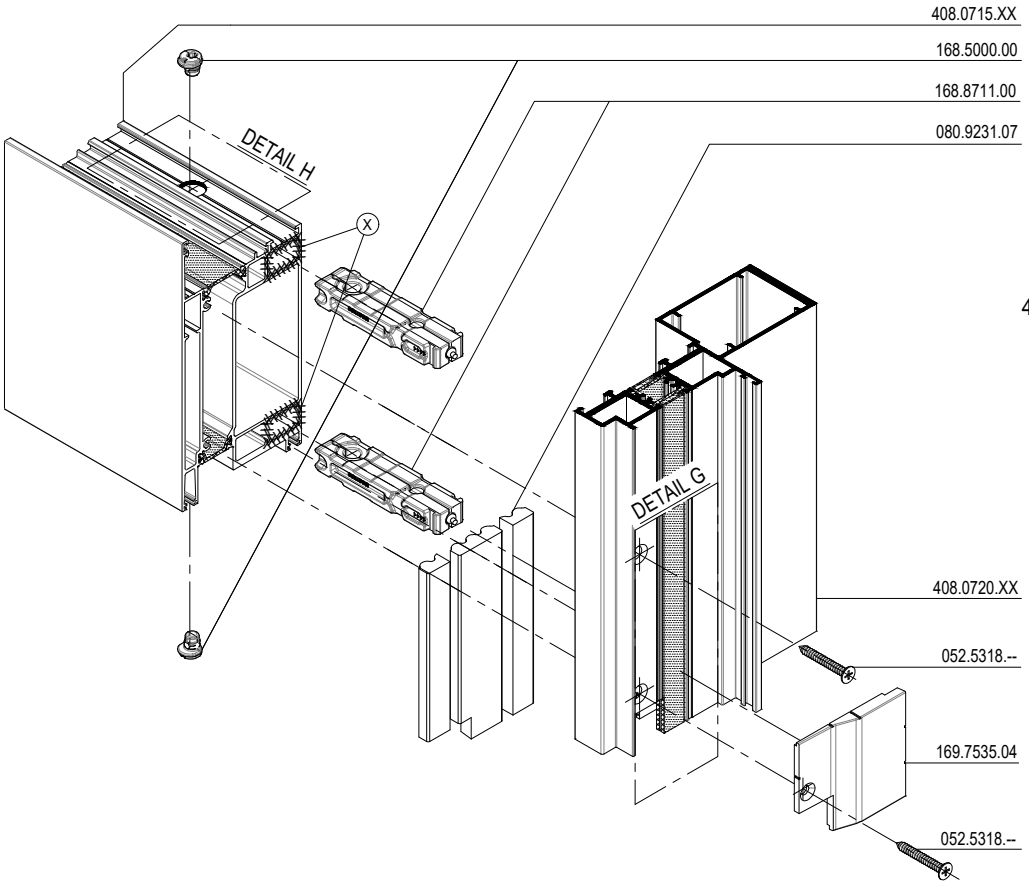

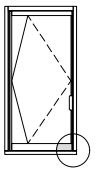

FRONT RIGHT

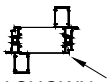

408.0715.XX SHOWN

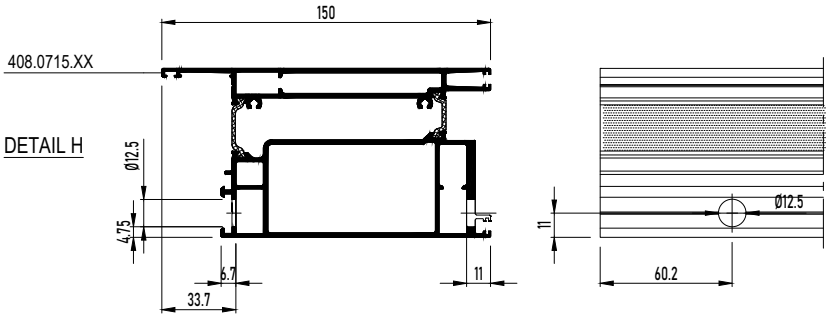

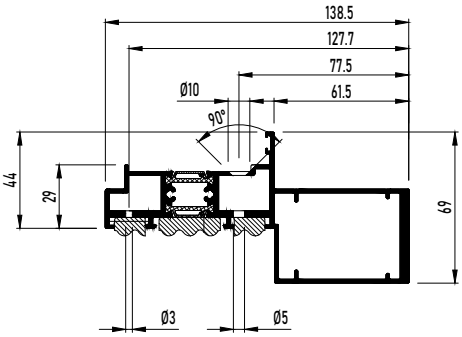

DETAIL F

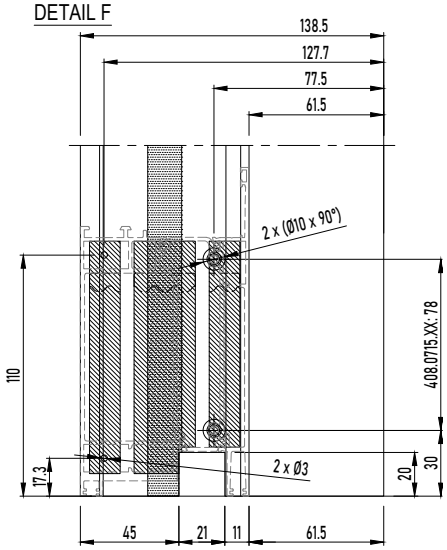

X DICHTINGSMIDDEL
MATIERE D'ETANCHEITE
SEALING AGENT
ABDICHTUNG

BIJKOMENDE INFO VOORBEREIDING/VERWERKING -> ZIE HOOFDSTUK F 'VERWERKINGSVOORSCHRIFTEN' !
INFO COMPLEMENTAIRE PREPARATION/USINAGE -> VOIR CHAPITRE F 'PRESCRIPTIONS DE MISE EN OEUVRE' !
ADDITIONAL INFO PREPARATION/PROCESSING -> SEE CHAPTER F 'PROCESSING DATA' !
ZUSAETZLICHE INFO VORBEREITUNG/VERARBEITUNG -> SIEHE KAPITEL F 'VERARBEITUNGSVORSCHRIFTEN' !

CORNER CONNECTION VENT PIVOT DOOR XL

CORNER CONNECTION VENT | 408.1790.XX

MASTERLINE 8-Fu

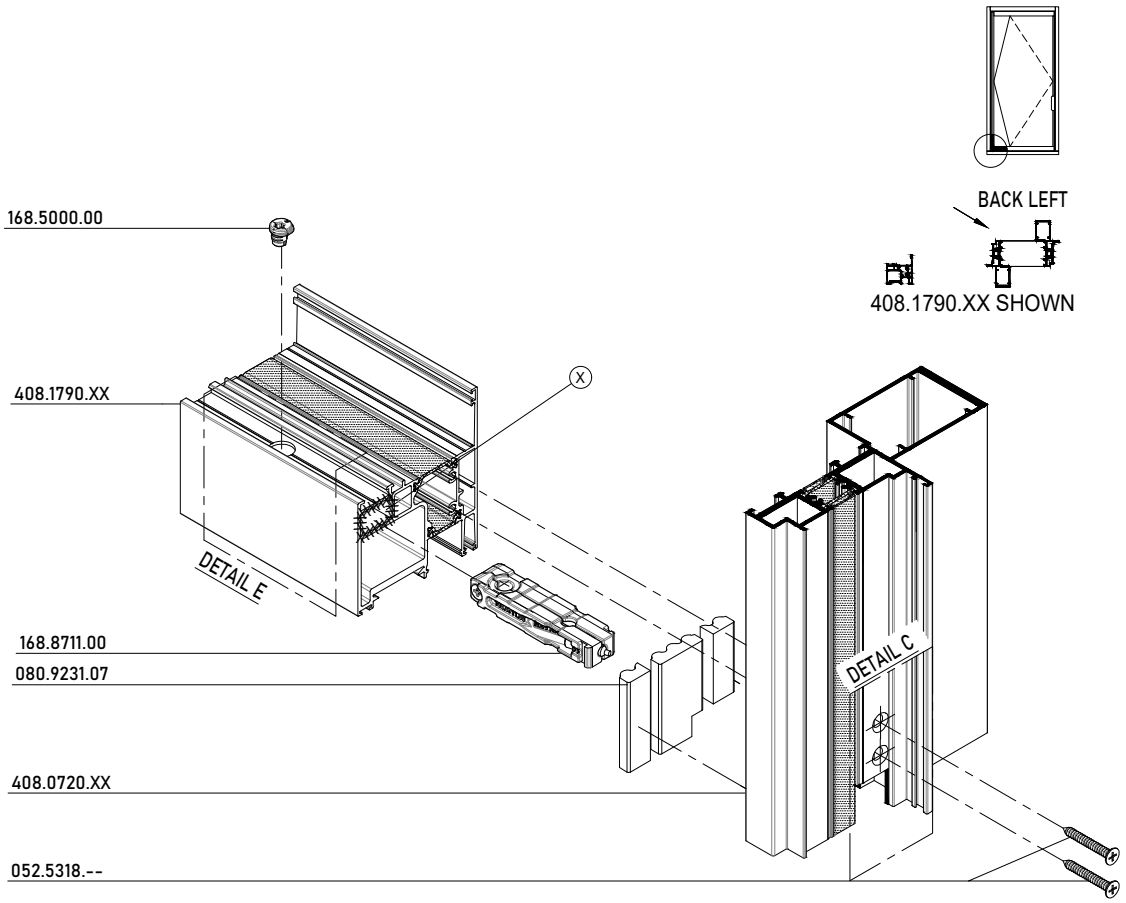

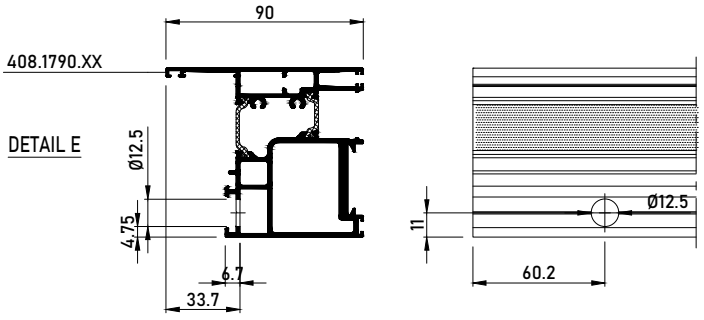

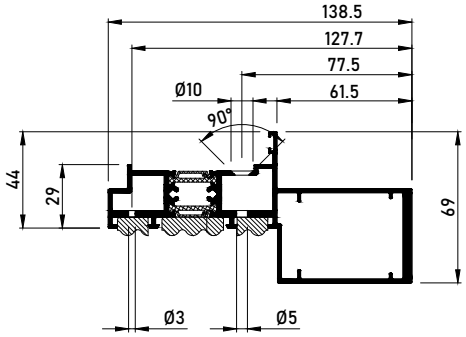

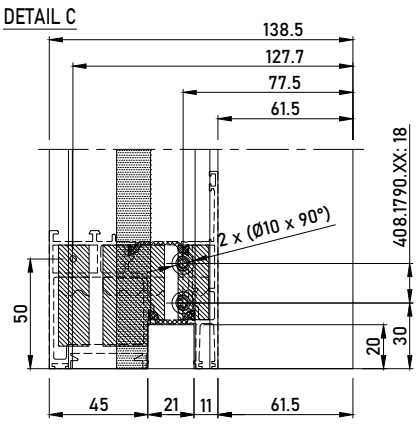

X DICHTINGSMIDDEL
MATIERE D'ETANCHEITE
SEALING AGENT
ABDICHTUNG

BIJKOMENDE INFO VOORBEREIDING/VERWERKING -> ZIE HOOFDSTUK F 'VERWERKINGSVOORSCHRIFTEN' !
INFO COMPLEMENTAIRE PREPARATION/USINAGE -> VOIR CHAPITRE F 'PRESCRIPTIONS DE MISE EN OEUVRE' !
ADDITIONAL INFO PREPARATION/PROCESSING -> SEE CHAPTER F 'PROCESSING DATA' !
ZUSAETZLICHE INFO VORBEREITUNG/VERARBEITUNG -> SIEHE KAPITEL F 'VERARBEITUNGSVORSCHRIFTEN' !

CORNER CONNECTION VENT PIVOT DOOR XL

CORNER CONNECTION VENT | 408.1790.XX

MASTERLINE 8-Fu

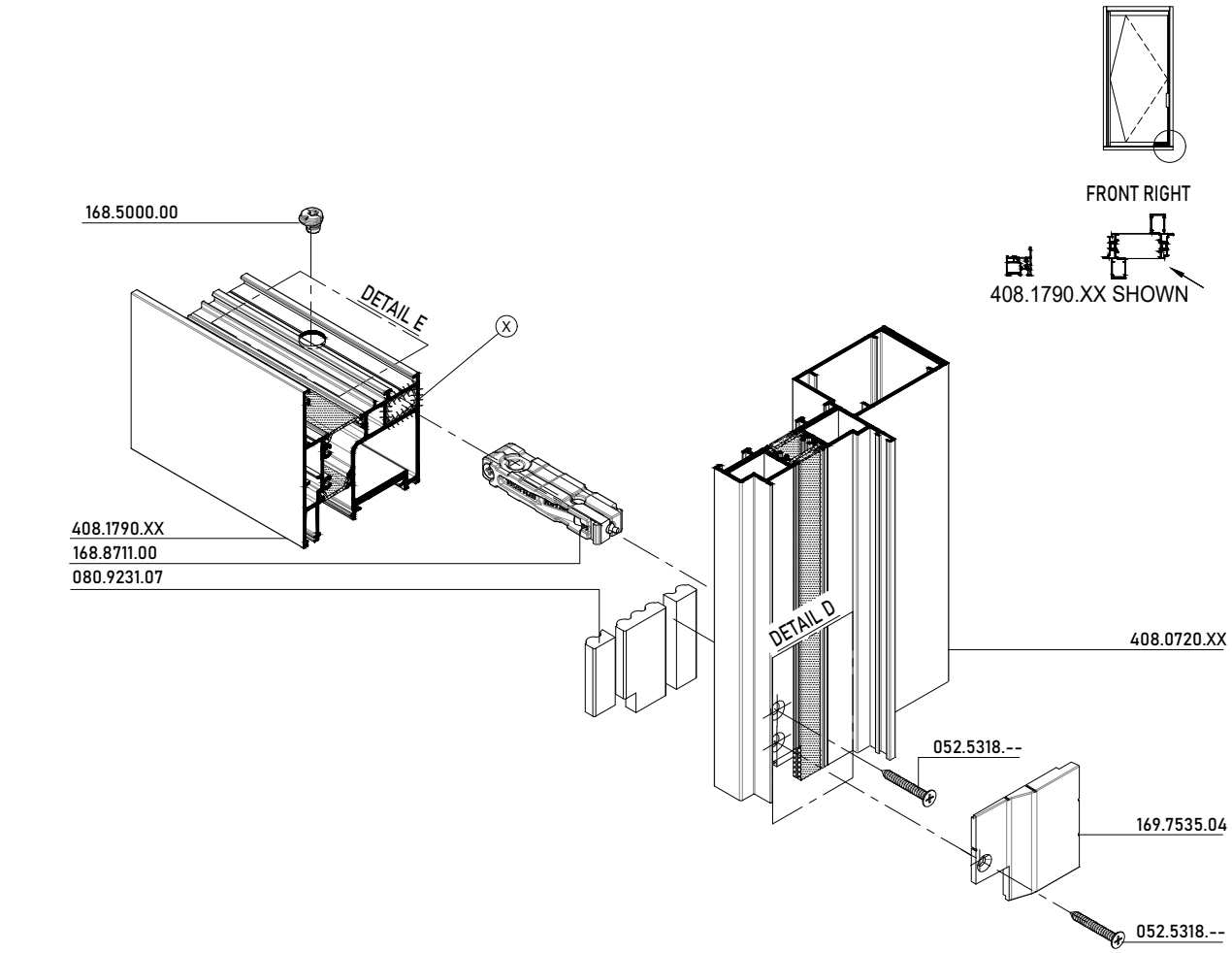

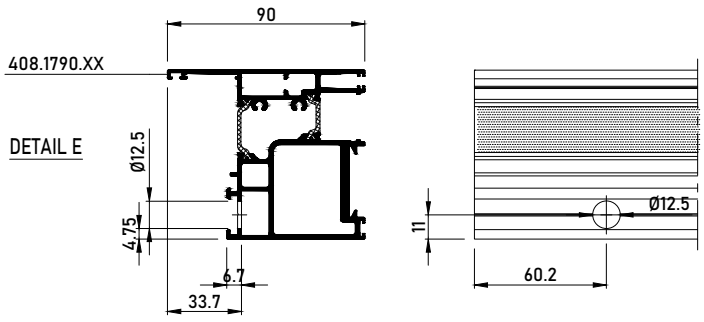

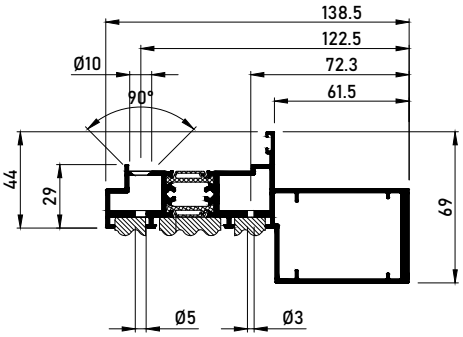

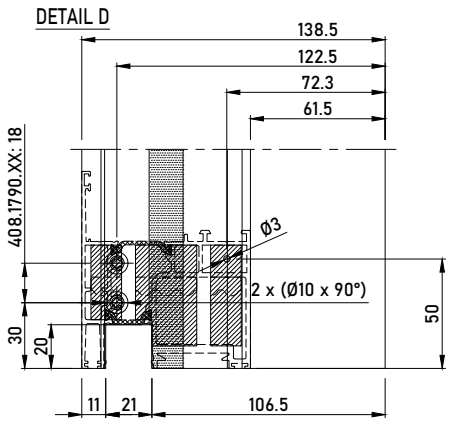

X DICHTINGSMIDDEL
MATIERE D'ETANCHEITE
SEALING AGENT
ABDICHTUNG

BIJKOMENDE INFO VOORBEREIDING/VERWERKING -> ZIE HOOFDSTUK F 'VERWERKINGSVOORSCHRIFTEN' !
INFO COMPLEMENTAIRE PREPARATION/USINAGE -> VOIR CHAPITRE F 'PRESCRIPTIONS DE MISE EN OEUVRE' !
ADDITIONAL INFO PREPARATION/PROCESSING -> SEE CHAPTER F 'PROCESSING DATA' !
ZUSAETZLICHE INFO VORBEREITUNG/VERARBEITUNG -> SIEHE KAPITEL F 'VERARBEITUNGSVORSCHRIFTEN' !

CORNER CONNECTION VENT PIVOT DOOR XL

CORNER CONNECTION VENT | 408.1790.XX

MASTERLINE 8-Fu

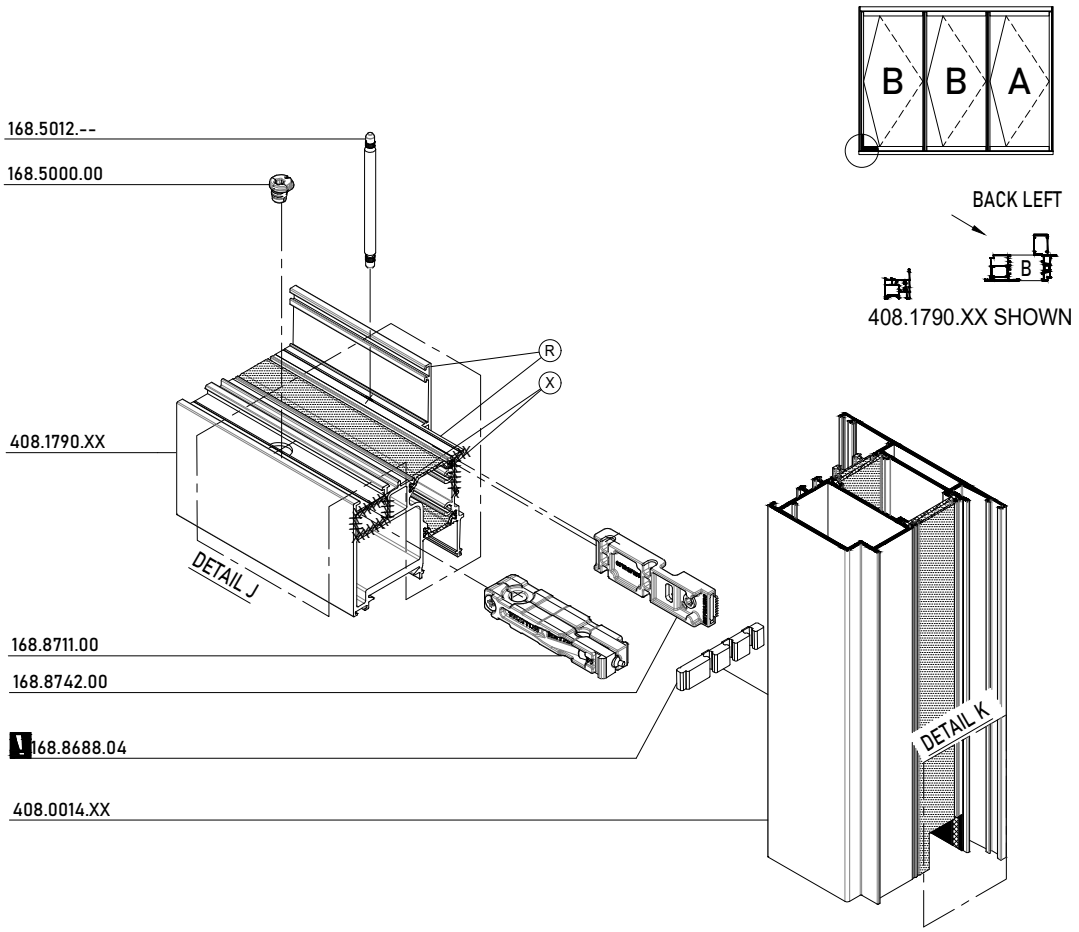

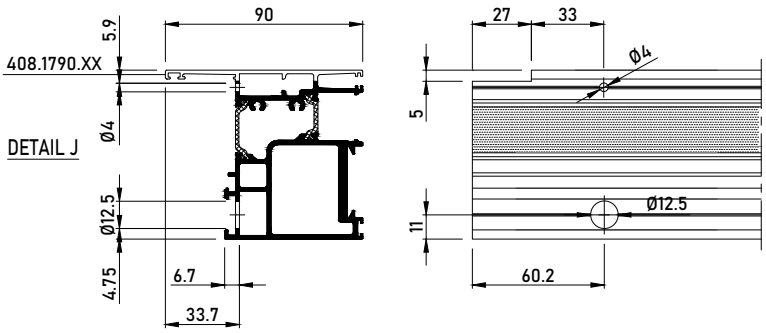

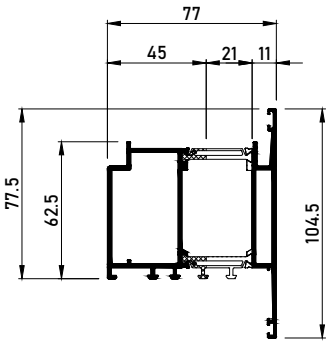

DETAIL K

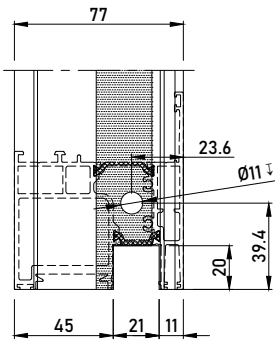

!	Plaats 168.8688.04 gelijk met beide uiteinden van T- verbinder Placer 168.8688.04 en affleurement avec les deux extrémités du jonction-T Place 168.8688.04 flush with both ends of the T-bracket Platzieren 168.8688.04 bündig mit den beiden Enden des T-verbinder

X	DICHTINGSMIDDEL MATIERE D'ETANCHEITE SEALING AGENT ABDICHTUNG
R	REYNAPROTECTOR REYNAPROTECTOR REYNAPROTECTOR REYNAPROTECTOR

BIJKOMENDE INFO VOORBEREIDING/VERWERKING -> ZIE HOOFDSTUK F 'VERWERKINGSVOORSCHRIFTEN' !
INFO COMPLEMENTAIRE PREPARATION/USINAGE -> VOIR CHAPITRE F 'PRESCRIPTIONS DE MISE EN OEUVRE' !
ADDITIONAL INFO PREPARATION/PROCESSING -> SEE CHAPTER F 'PROCESSING DATA' !
ZUSAETZLICHE INFO VORBEREITUNG/VERARBEITUNG -> SIEHE KAPITEL F 'VERARBEITUNGSVORSCHRIFTEN' !

CORNER CONNECTION VENT PIVOT DOOR XL

CORNER CONNECTION VENT | 408.1790.XX

MASTERLINE 8-Fu

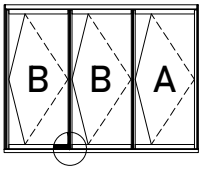

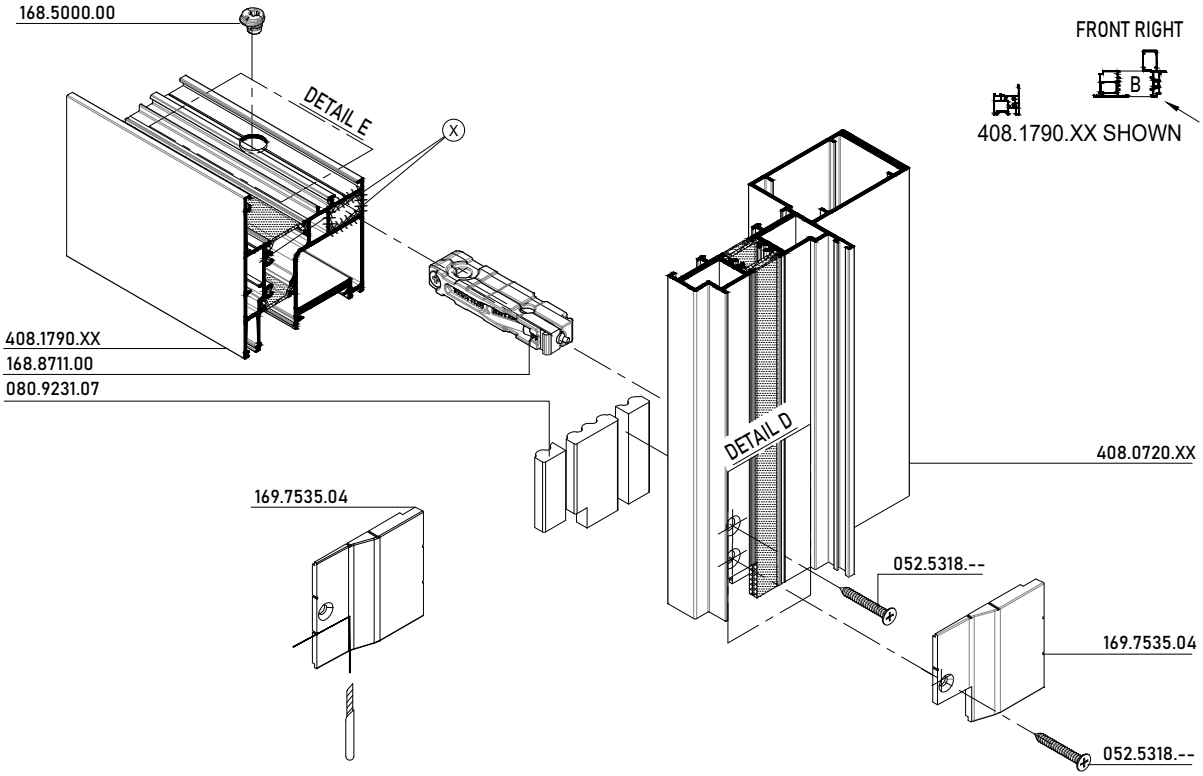

FRONT RIGHT

408.1790.XX SHOWN

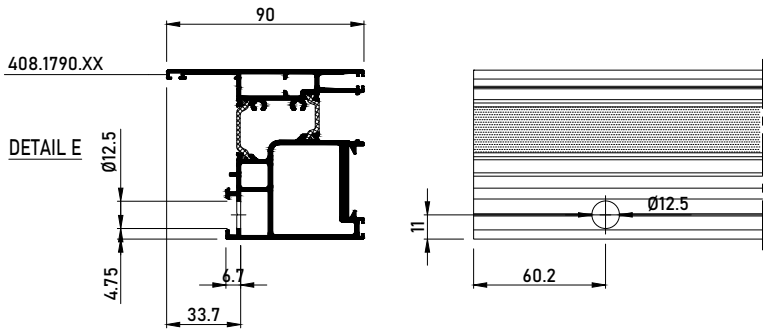

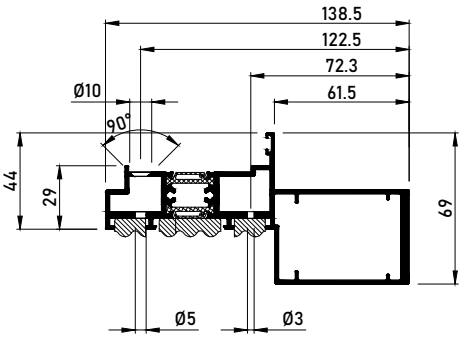

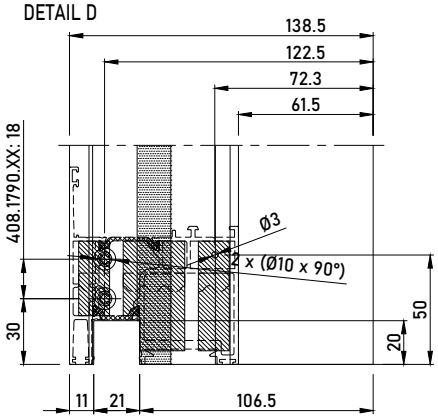

X DICHTINGSMIDDEL
MATIERE D'ETANCHEITE
SEALING AGENT
ABDICHTUNG

BIJKOMENDE INFO VOORBEREIDING/VERWERKING -> ZIE HOOFDSTUK F 'VERWERKINGSVOORSCHRIFTEN' !
INFO COMPLEMENTAIRE PREPARATION/USINAGE -> VOIR CHAPITRE F 'PRESCRIPTIONS DE MISE EN OEUVRE' !
ADDITIONAL INFO PREPARATION/PROCESSING -> SEE CHAPTER F 'PROCESSING DATA' !
ZUSAETZLICHE INFO VORBEREITUNG/VERARBEITUNG -> SIEHE KAPITEL F 'VERARBEITUNGSVORSCHRIFTEN' !

CORNER SCREW

GLUE INJECTION + CORNER CONNECTION 197.D600.00

MASTERLINE 8-Fu

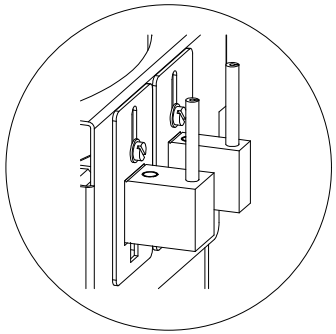

ALGEMEEN PRINCIPE
GENERAL PRINCIPE
GENERAL PRINCIPLE
ALLGEMEIN PRINZIP



A



B

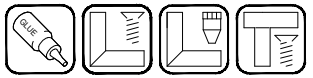

A + B

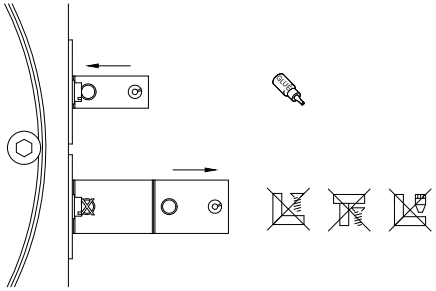

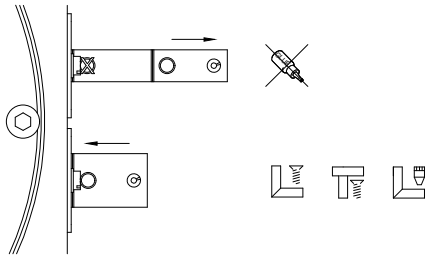

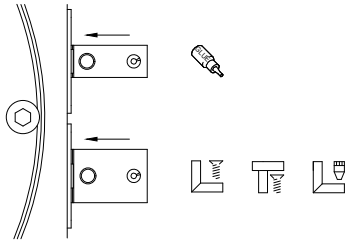

CORNER SCREW

GLUE INJECTION + CORNER CONNECTION 197.D600.00

MASTERLINE 8-Fu

A

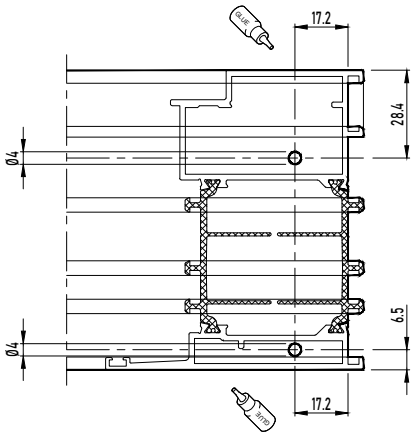

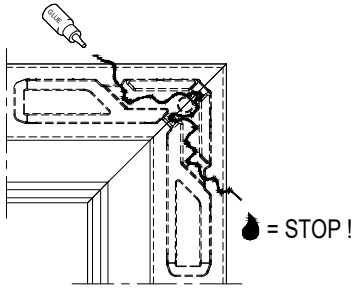



REYNASEAL DUO
REYNASEAL DUO
REYNASEAL DUO
REYNASEAL DUO

LIJMINJECTIE NA VERBINDING
INJECTION DE COLLE APRÈS LA CONNEXION
GLUE INJECTION AFTER CONNECTION
KLEBEINJEKTION NACH DEM ANSCHLUSS

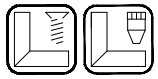

B

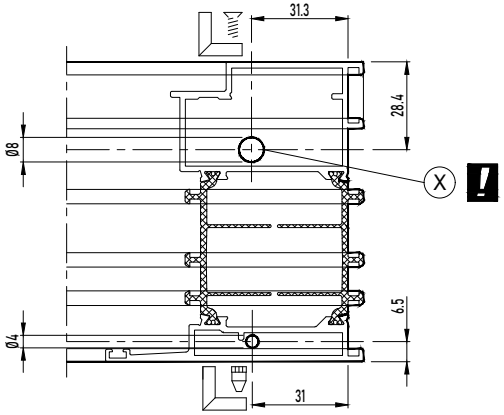

X DICHTINGSMIDDEL
MATIERE D'ETANCHEITE
SEALING AGENT
ABDICHTUNG

LIJMINJECTIE VOOR VERBINDING
INJECTION DE COLLE AVANT LA CONNEXION
GLUE INJECTION BEFORE CONNECTION
KLEBEINJEKTION VOR ANSCHLUSS

CORNER SCREW

GLUE INJECTION + CORNER CONNECTION 197.D600.00

MASTERLINE 8-Fu

A + B





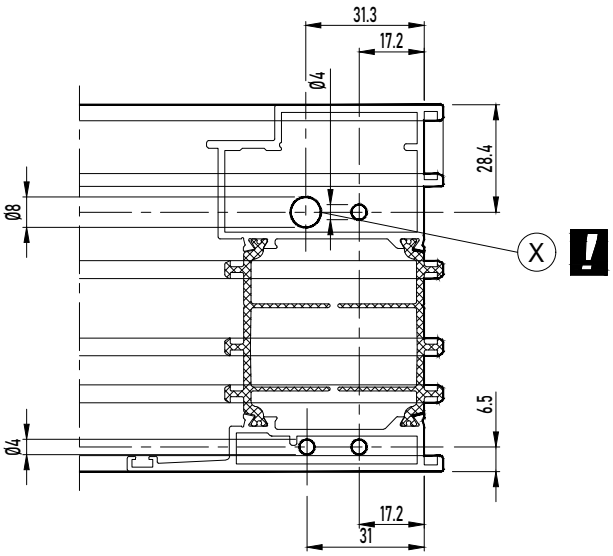



Aanpassing diameter: zie handleiding 197.D600.00
Modification diamètre: voir manuel 197.D600.00
Change size diameter: see manual 197.D600.00
Wechsel Durchmesser: siehe Gebrauchsanweisung 197.D600.00

MONTAGEVOLGORDE
L 'ORDRE DE MONTAGE
THE ORDER OF ASSEMBLY
MONTAGEREIHENFOLGE
1 2 3 .

X DICHTINGSMIDDEL
MATIERE D'ETANCHEITE
SEALING AGENT
ABDICHTUNG

LIJMINJECTIE NA VERBINDING
INJECTION DE COLLE APRÈS LA CONNEXION
GLUE INJECTION AFTER CONNECTION
KLEBEINJEKTION NACH DEM ANSCHLUSS

CORNER SCREW

GLUE INJECTION + CORNER CONNECTION 197.D600.00

MASTERLINE 8-Fu

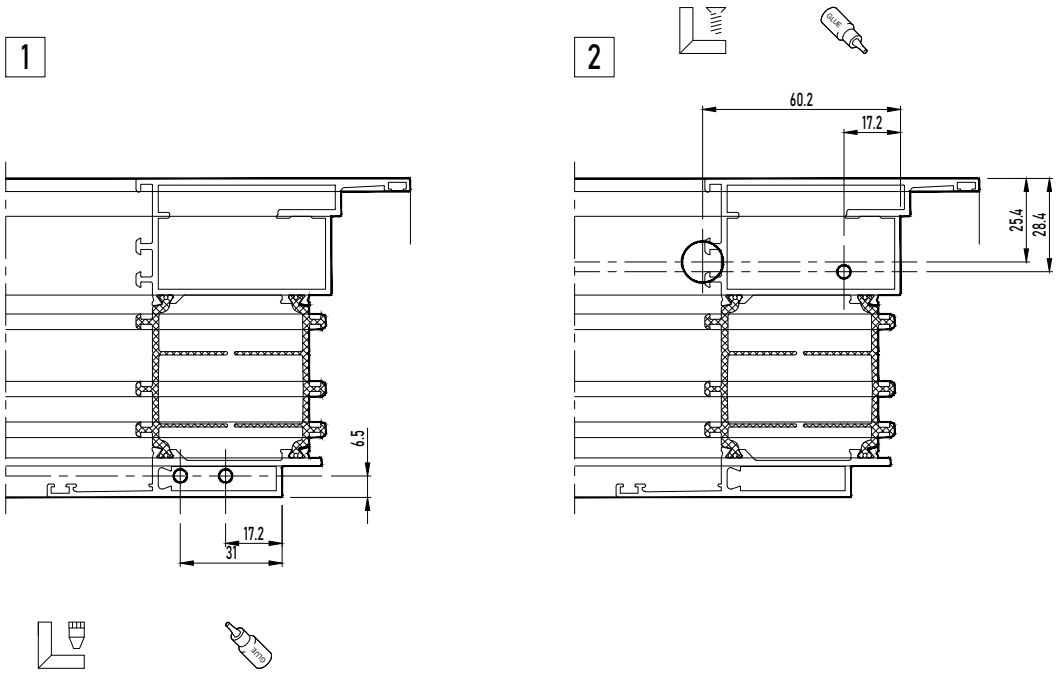

Aanpassing diameter: zie handleiding 197.D600.00
Modification diamètre: voir manuel 197.D600.00
Change size diameter: see manual 197.D600.00
Wechsel Durchmesser: siehe Gebrauchsanweisung 197.D600.00

MONTAGEVOLGORDE L 'ORDRE DE MONTAGE THE ORDER OF ASSEMBLY MONTAGEREIHENFOLGE	1 2 3 .

X DICHTINGSMIDDEL MATIERE D'ETANCHEITE SEALING AGENT ABDICHTUNG	LIJMINJECTIE NA VERBINDING INJECTION DE COLLE APRÈS LA CONNEXION GLUE INJECTION AFTER CONNECTION KLEBEINJEKTION NACH DEM ANSCHLUSS

DECOMPRESSION BALCONY DOOR BALCONY DOOR 2024

DECOMPRESSION

MASTERLINE 8-Fu

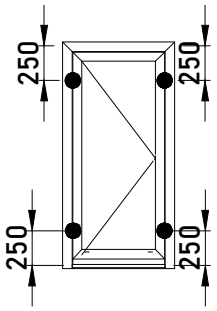

DECOMPRESSIE RAAMDEUR
DECOMPRESSION PORTE-FENETRE
DECOMPRESSION WINDOW-DOORS
DEKOMPRESSION FENSTERTUEREN

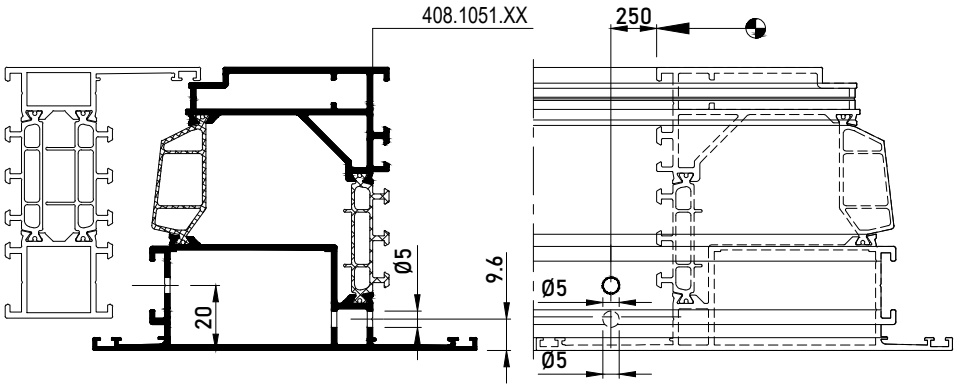

DECOMPRESSION VENT

DECOMPRESSION

MASTERLINE 8-Fu

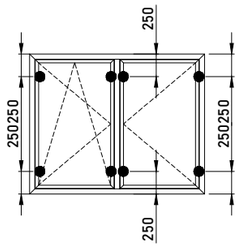

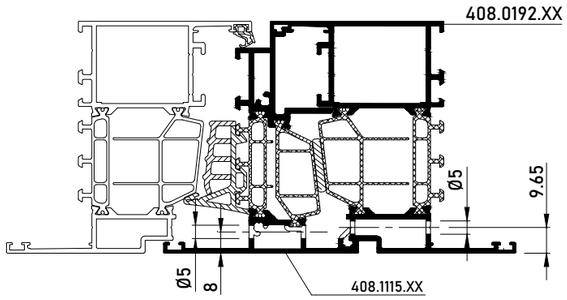

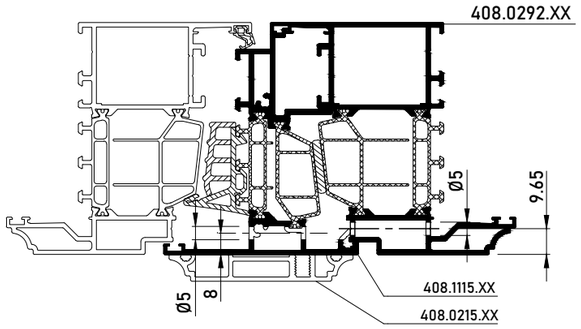

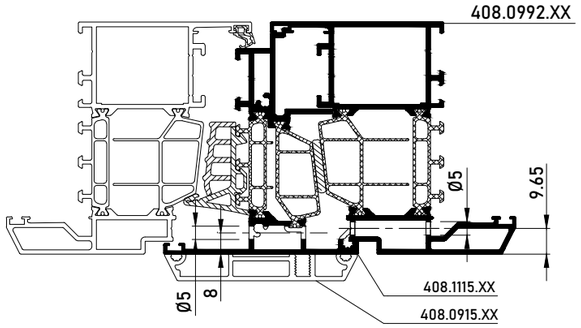

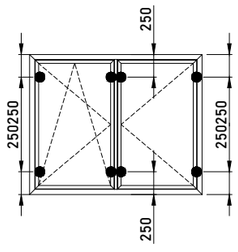

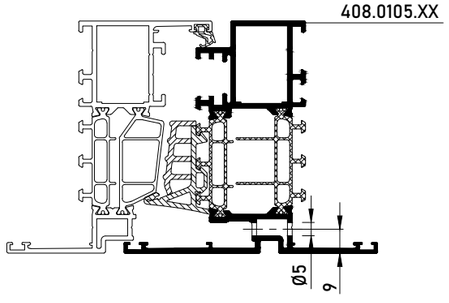

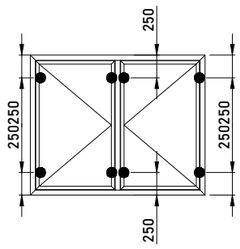

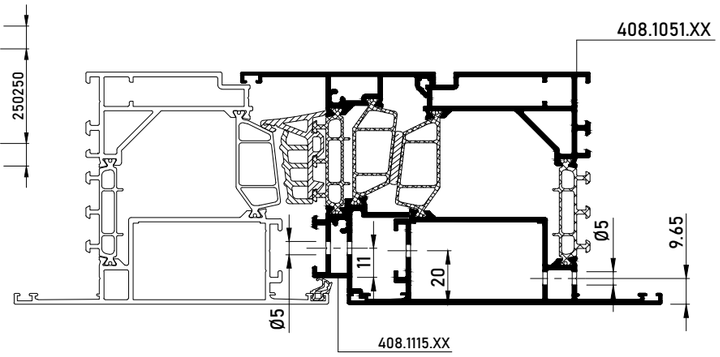

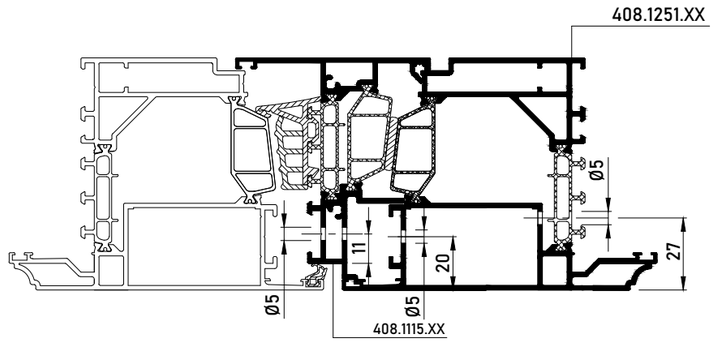

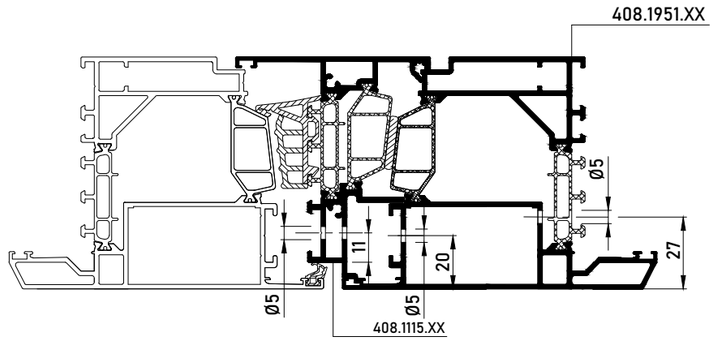

DECOMPRESSIE VAST RAAM
DECOMPRESSION FENETRE FIXE
DECOMPRESSION FIXED WINDOW
DEKOMPRESSION FESTVERGLASUNG

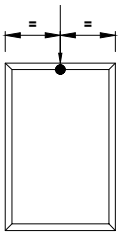

OPTIE/OPTION 1

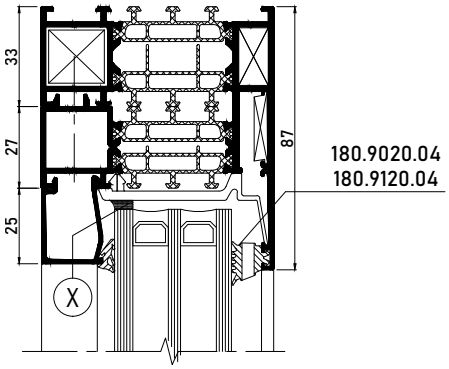

180.9020.04
180.9120.04

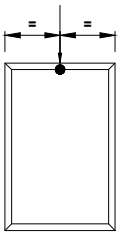

OPTIE/OPTION 2

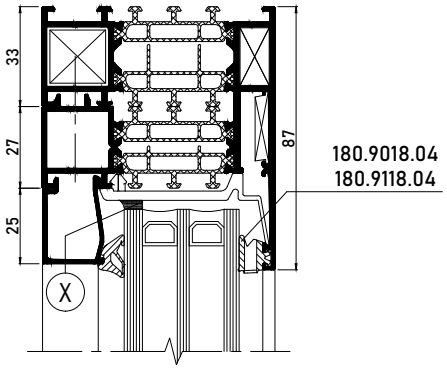

180.9018.04
180.9118.04

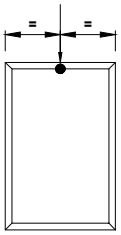

OPTIE/OPTION 3

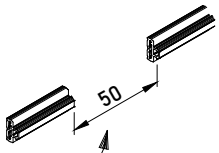

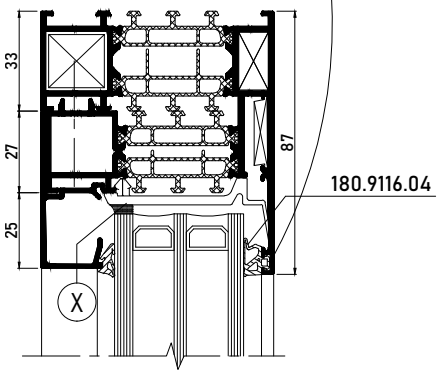

180.9116.04

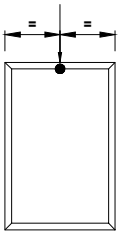

OPTIE/OPTION 4

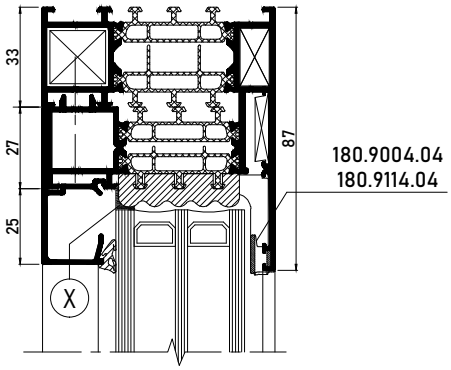

180.9004.04
180.9114.04

DECOMPRESSION

DECOMPRESSION

MASTERLINE 8-HV

DECOMPRESSIE RAAM
DECOMPRESSION FENETRE
DECOMPRESSION WINDOW
DEKOMPRESSION VERGLASUNG

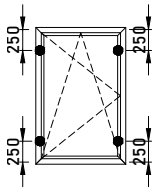

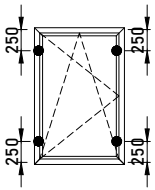

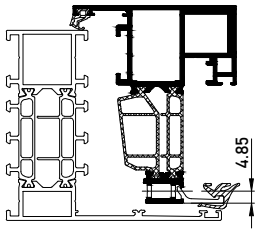

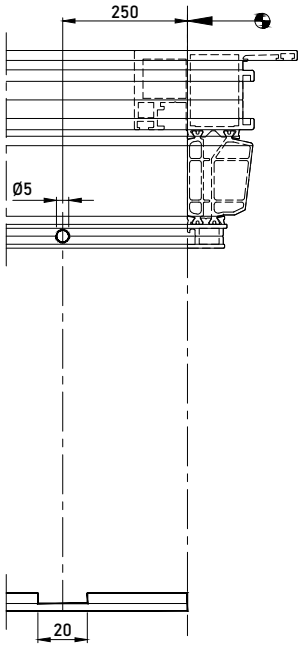

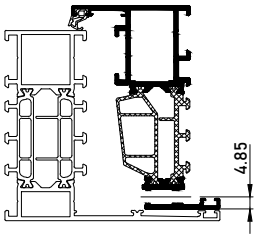

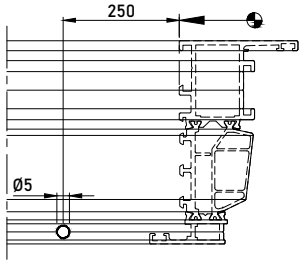

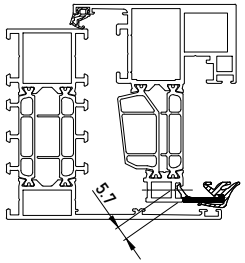

X DICHTINGSMIDDEL
MATIERE D'ETANCHEITE
SEALING AGENT
ABDICHTUNG



DECOMPRESSIE STOLPRAAM
DECOMPRESSION FENETRE DOUBLE OUVRANTE
DECOMPRESSION DOUBLE CASEMENT WINDOW
DEKOMPRESSION STULPFENSTER

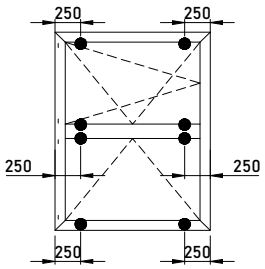

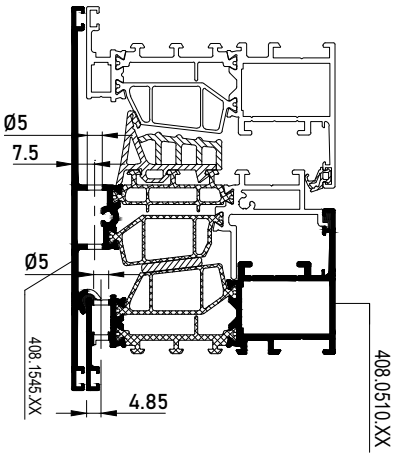

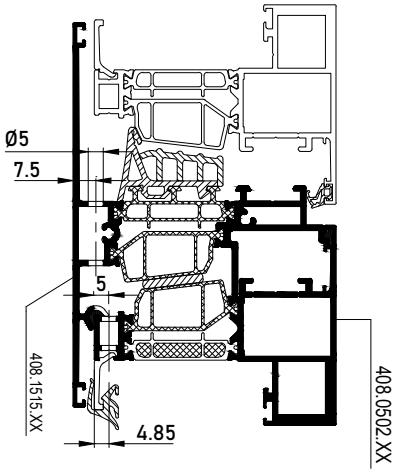

DOUBLE CASEMENT BALCONY DOOR

ASSEMBLY DOUBLE CASEMENT PROFILE BALCONY DOOR

MASTERLINE 8-Fu

MONTAGEVOLGORDE
L 'ORDRE DE MONTAGE
THE ORDER OF ASSEMBLY
MONTAGEREIHENFOLGE
1 2 3 .

ALLEEN VOOR
SEULEMENT PUR
ONLY FOR
NUR FÜR

(X) DICHTINGSMIDDEL
MATIERE D'ETANCHEITE
SEALING AGENT
ABDICHTUNG

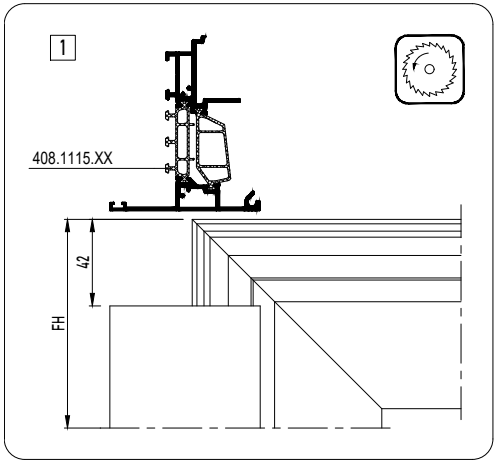

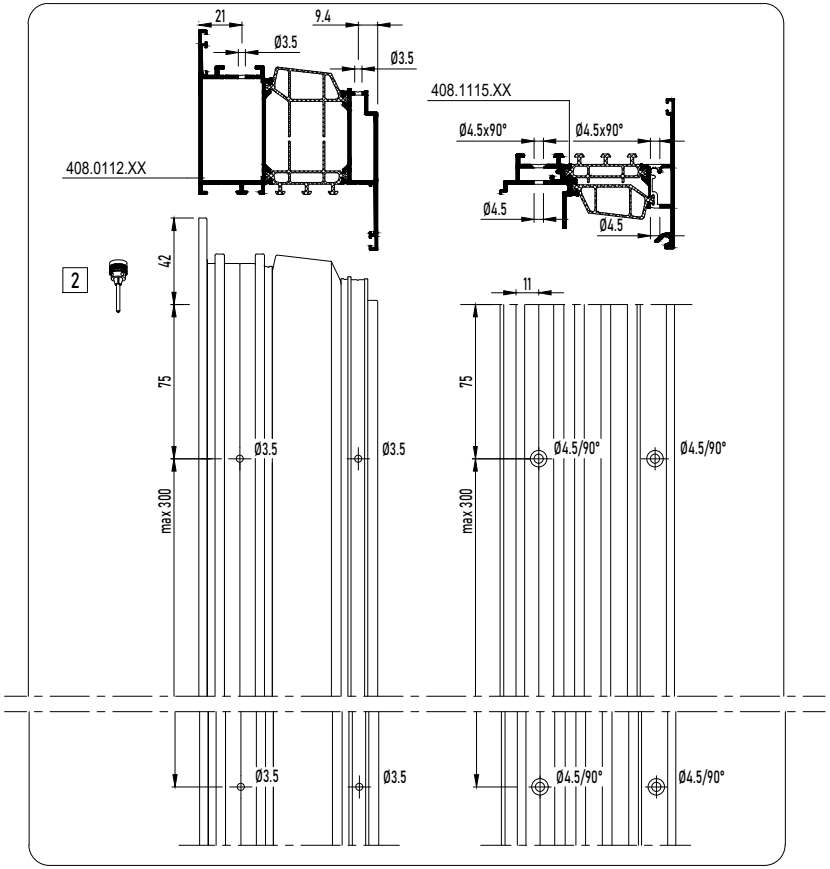

DOUBLE CASEMENT BALCONY DOOR

ASSEMBLY DOUBLE CASEMENT PROFILE BALCONY DOOR

MASTERLINE 8-Fu

3

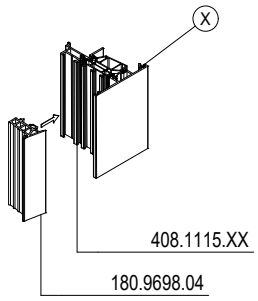

4

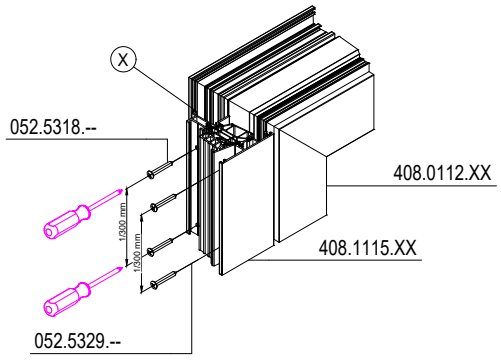

5

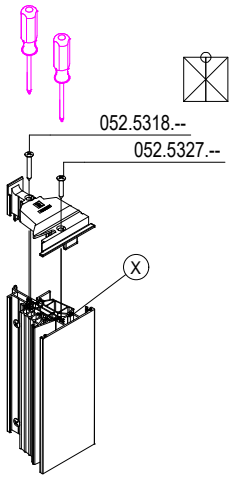

6

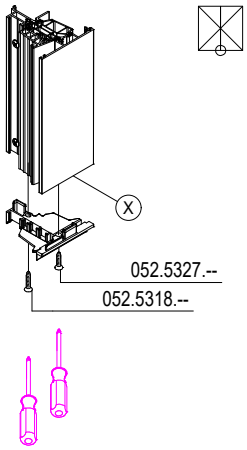

MONTAGEVOLGORDE L 'ORDRE DE MONTAGE THE ORDER OF ASSEMBLY MONTAGEREIHENFOLGE	1 2 3 .
ALLEEN VOOR SEULEMENT PUR ONLY FOR NUR FÜR	!
X	DICHTINGSMIDDEL MATIERE D'ETANCHEITE SEALING AGENT ABDICHTUNG

DOUBLE CASEMENT BALCONY DOOR

ASSEMBLY DOUBLE CASEMENT PROFILE BALCONY DOOR

MASTERLINE 8-Fu

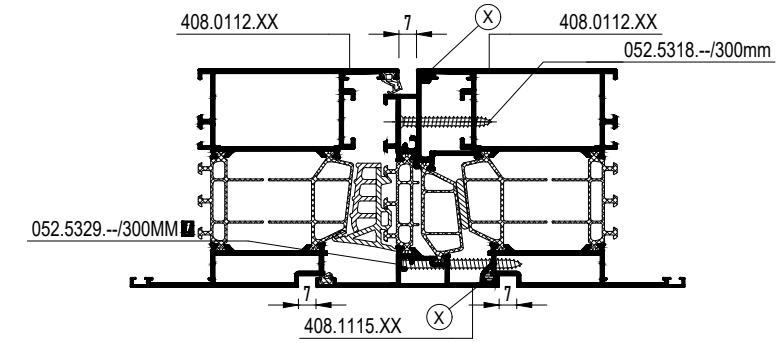

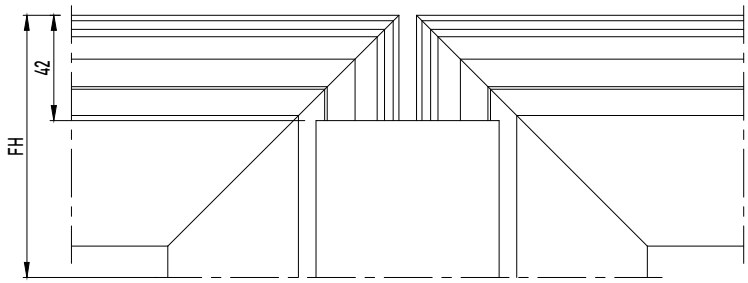

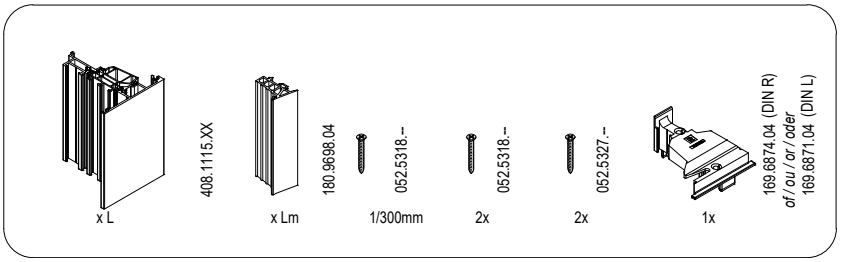

DOUBLE CASEMENT BALCONY DOOR

ASSEMBLY DOUBLE CASEMENT PROFILE BALCONY DOOR

MASTERLINE 8-Fu

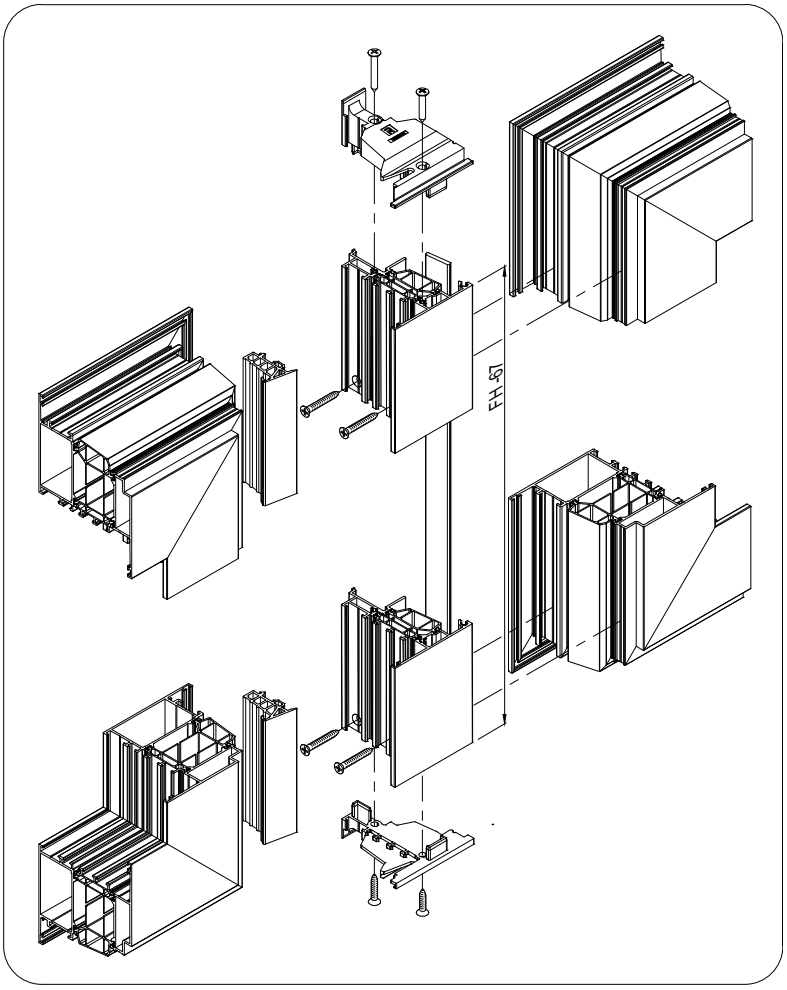

DOUBLE CASEMENT BALCONY DOOR 2024

ASSEMBLY DOUBLE CASEMENT PROFILE BALCONY DOOR

MASTERLINE 8-Fu

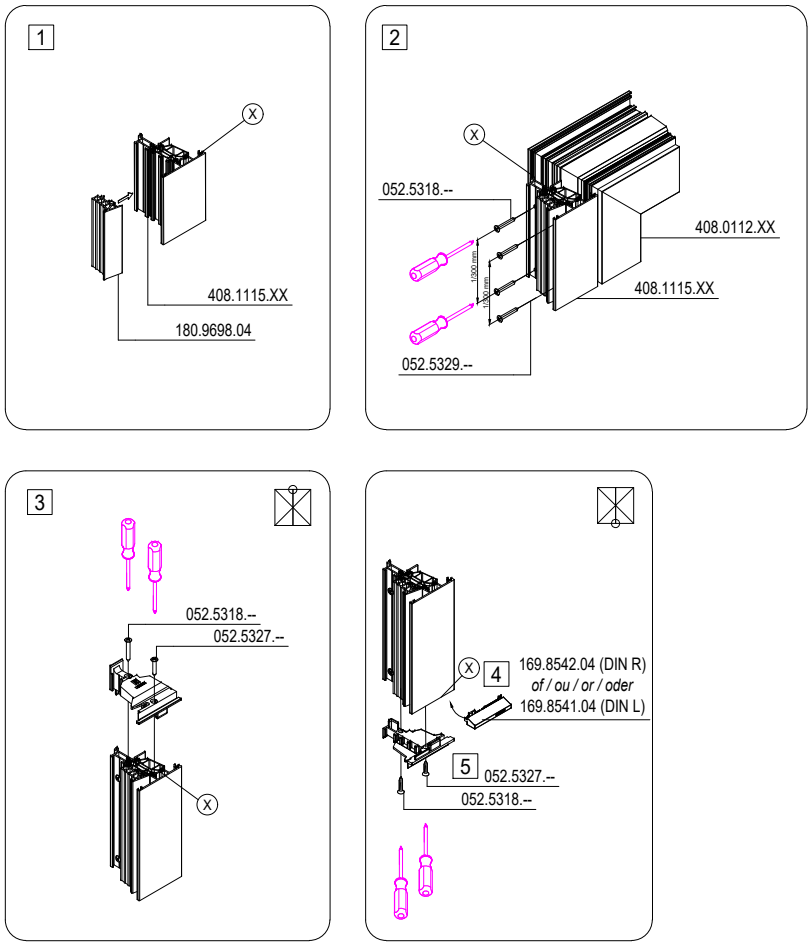

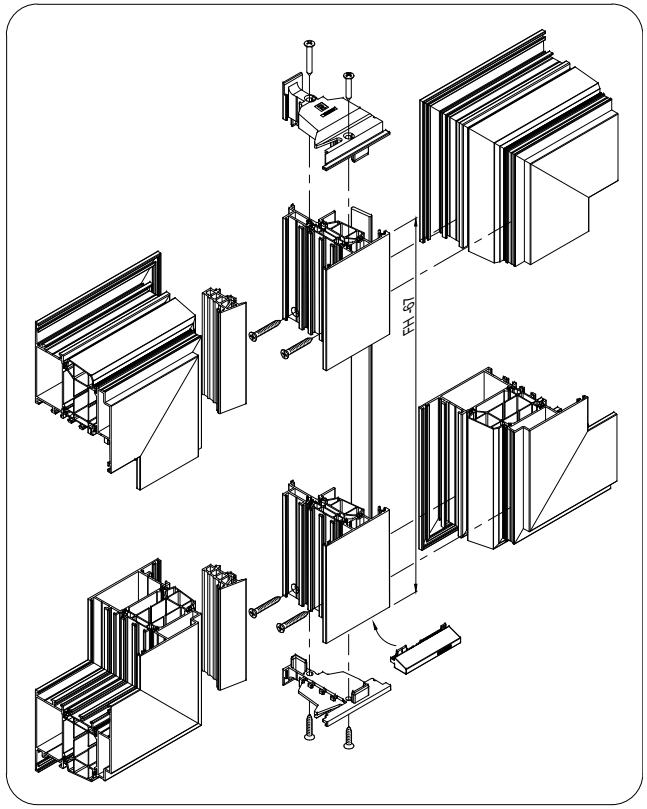

MONTAGEVOLGORDE
L 'ORDRE DE MONTAGE
THE ORDER OF ASSEMBLY
MONTAGEREIHENFOLGE
1 2 3 .

X DICHTINGSMIDDEL
MATIERE D'ETANCHEITE
SEALING AGENT
ABDICHTUNG

DOUBLE CASEMENT BALCONY DOOR 2024

ASSEMBLY DOUBLE CASEMENT PROFILE BALCONY DOOR

MASTERLINE 8-Fu

1

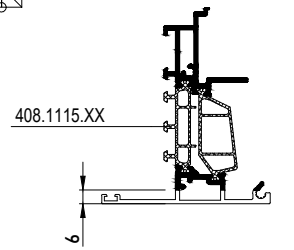

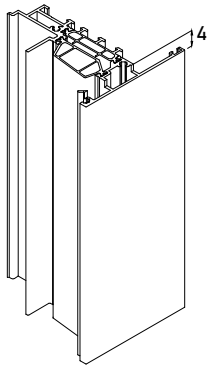

2

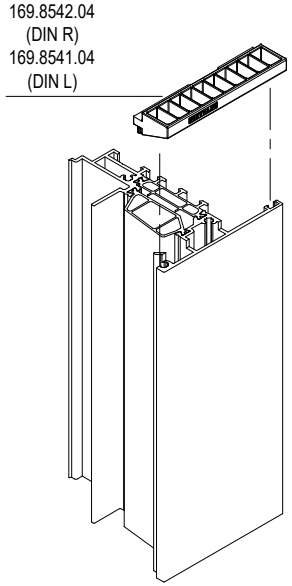

MONTAGEVOLGORDE
L 'ORDRE DE MONTAGE
THE ORDER OF ASSEMBLY
MONTAGEREIHENFOLGE

1 2 3 .

DOUBLE CASEMENT BALCONY DOOR 2024

ASSEMBLY DOUBLE CASEMENT PROFILE BALCONY DOOR

MASTERLINE 8-Fu

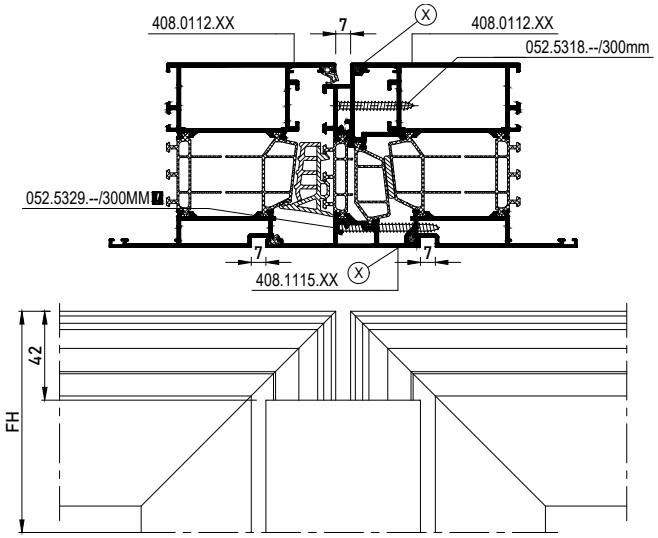

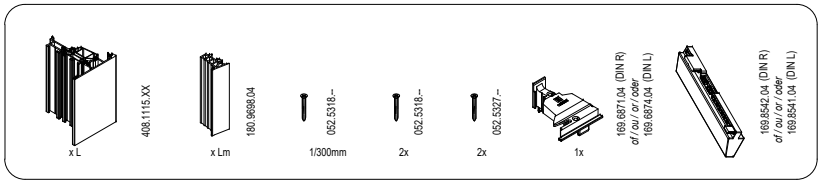

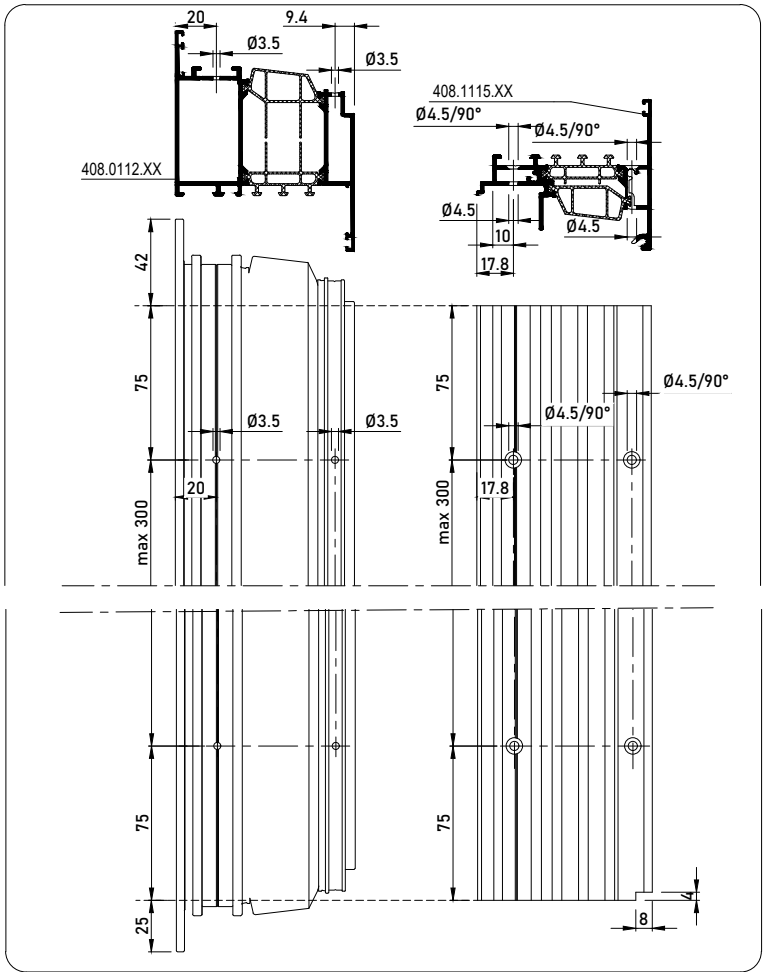

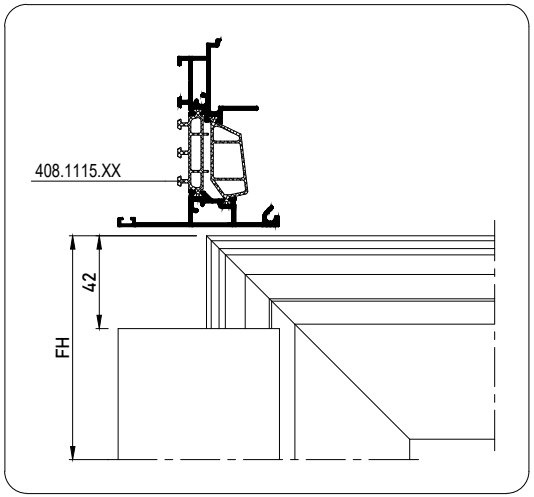



DRAINAGE PIVOT DOOR XL

DRAINAGE | 408.1790.XX, 408.0715.XX

MASTERLINE 8-Fu

			-
			-
	095.E000.00 or 095.N300.00 or 095.B700.00 or 095.C300.00		
	095.B300.00		
	-		

408.1790.XX	

Ontwatering

VOLGORDE
1. Correct ponsen, boren of frezen
2. Ontbramen (Indien noodzakelijk)
3. Stof en zaagresten verwijderen
4. Ontvetten met Degreaser, art. nr. 086.9210.--
5. Anticorrosieproduct aanbrengen, art. nr. 086.9208.--, 086.9225.--

Drainage

ORDRE
1. Poinçonnage, forage ou fraisage correct
2. Ebavurage (si nécessaire)
3. Enlèvement des poussières et des copeaux
4. Dégraissage avec Degreaser, art. nr. 086.9210.--
5. Application de produit anti-corrosion, art. nr. 086.9208.--, 086.9225.--

Drainage

SEQUENCE
1. Correct punching, drilling or milling
2. Deburring (if necessary)
3. Removing dust and saw-dust
4. Degreasing with Degreaser, art. nr. 086.9210.--
5. Applying anti-corrosion product, art. nr. 086.9208.--, 086.9225.--

Entwässerung

REIHENFOLGE
1. Stanzen, bohren oder fräsen
2. Entgraten (falls erforderlich)
3. Staub und Sägereste entfernen
4. Entfetten mit Degreaser, art. nr. 086.9210.--
5. Korrosionsschutzprodukt aufbringen, art. nr. 086.9208.--, 086.9225.--

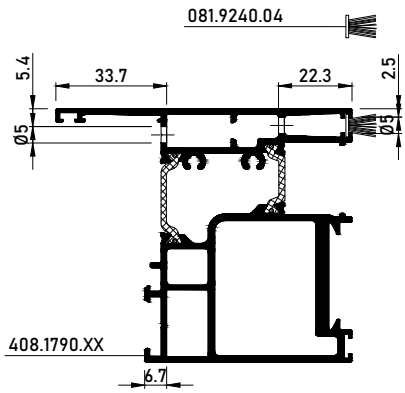

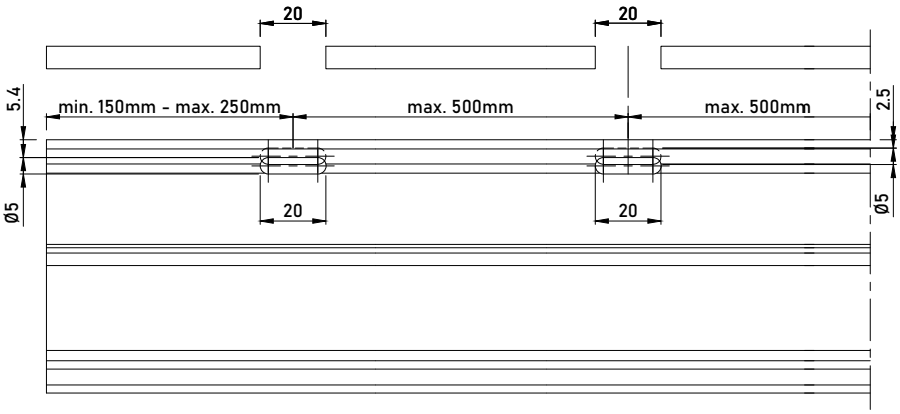

DRAINAGE PIVOT DOOR XL

DRAINAGE | 408.1790.XX, 408.0715.XX

MASTERLINE 8-Fu

			-	408.0715.XX	
		-			
	095.E000.00 or 095.N300.00 or 095.B700.00 or 095.C300.00				
	095.B300.00				
	-				

Ontwatering

VOLGORDE
1. Correct ponsen, boren of frezen
2. Ontbramen (Indien noodzakelijk)
3. Stof en zaagresten verwijderen
4. Ontvetten met Degreaser, art. nr. 086.9210.--
5. Anticorrosieproduct aanbrengen, art. nr. 086.9208.--, 086.9225.--

Drainage

ORDRE
1. Poinçonnage, forage ou fraisage correct
2. Ebavurage (si nécessaire)
3. Enlèvement des poussières et des copeaux
4. Dégraissage avec Degreaser, art. nr. 086.9210.--
5. Application de produit anti-corrosion, art. nr. 086.9208.--, 086.9225.--

Drainage

SEQUENCE
1. Correct punching, drilling or milling
2. Deburring (if necessary)
3. Removing dust and saw-dust
4. Degreasing with Degreaser, art. nr. 086.9210.--
5. Applying anti-corrosion product, art. nr. 086.9208.--, 086.9225.--

Entwässerung

REIHENFOLGE
1. Stanzen, bohren oder fräsen
2. Entgraten (falls erforderlich)
3. Staub und Sägereste entfernen
4. Entfetten mit Degreaser, art. nr. 086.9210.--
5. Korrosionsschutzprodukt aufbringen, art. nr. 086.9208.--, 086.9225.--

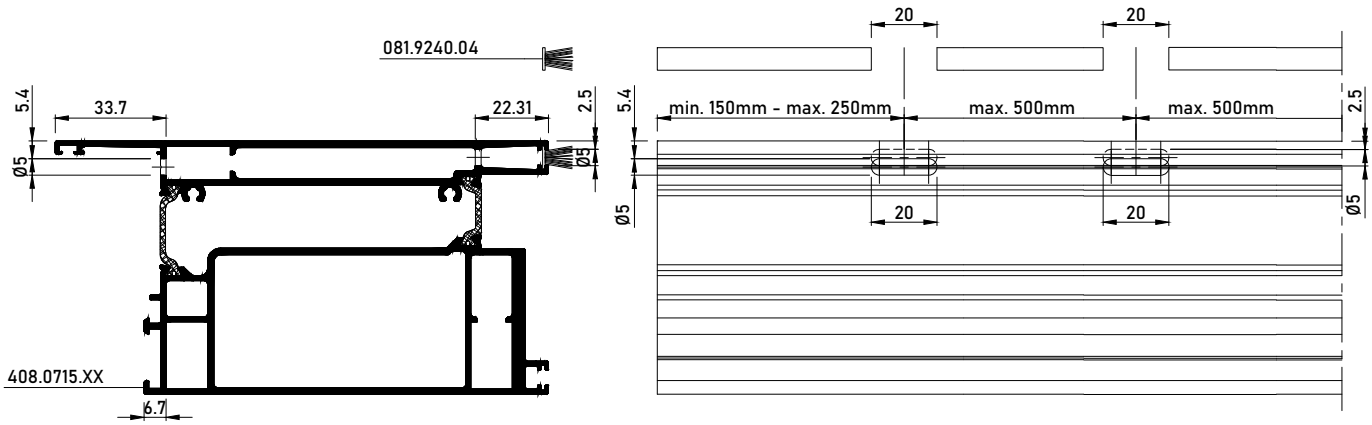

DRAINAGE CR BALCONY DOOR 2024

DRAINAGE VENT

MASTERLINE 8-Fu

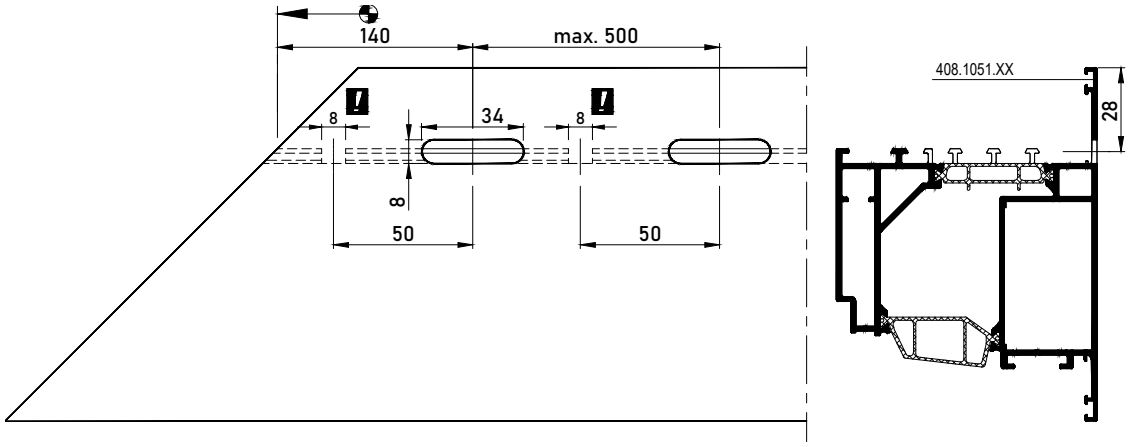

DRAINAGE CR BALCONY DOOR 2024

DRAINAGE VENT

MASTERLINE 8-Fu

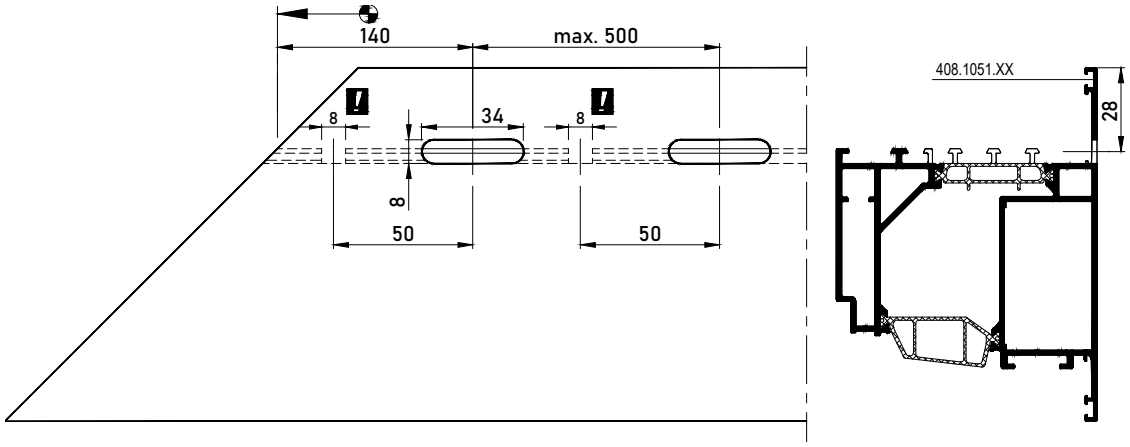

DRAINAGE CR INWARD OPENING

HIDDEN DRAINAGE VENT FLUSH DOOR

MASTERLINE 8-Fu

X DICHTINGSMIDDEL
MATIERE D'ETANCHEITE
SEALING AGENT
ABDICHTUNG

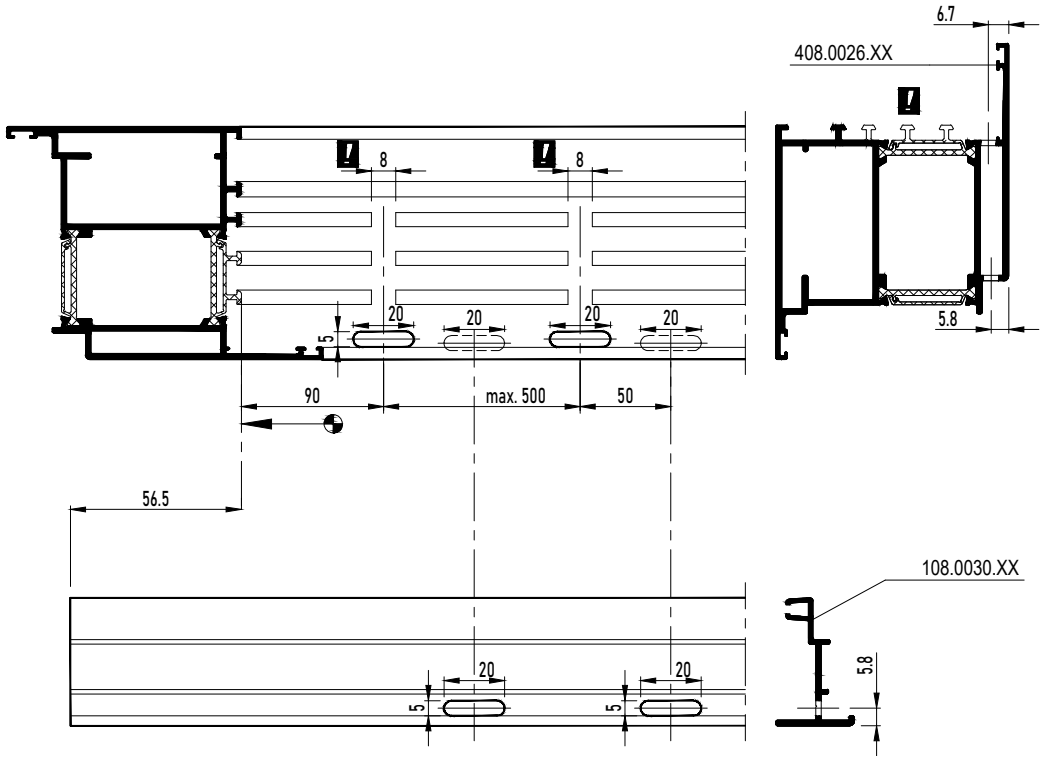

DRAINAGE CR INWARD OPENING

HIDDEN DRAINAGE VENT FLUSH DOOR

MASTERLINE 8-Fu

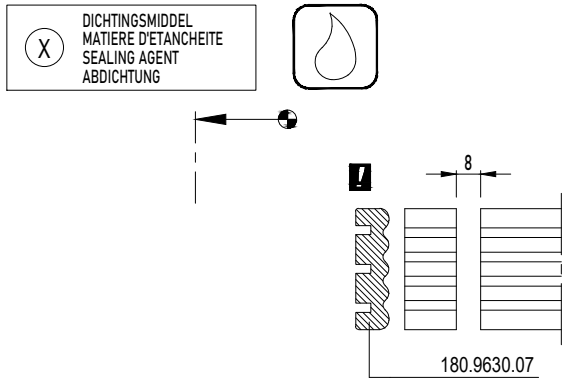

DRAINAGE CR INWARD OPENING

HIDDEN DRAINAGE VENT FLUSH DOOR

MASTERLINE 8-Fu

X DICHTINGSMIDDEL
MATIERE D'ETANCHEITE
SEALING AGENT
ABDICHTUNG

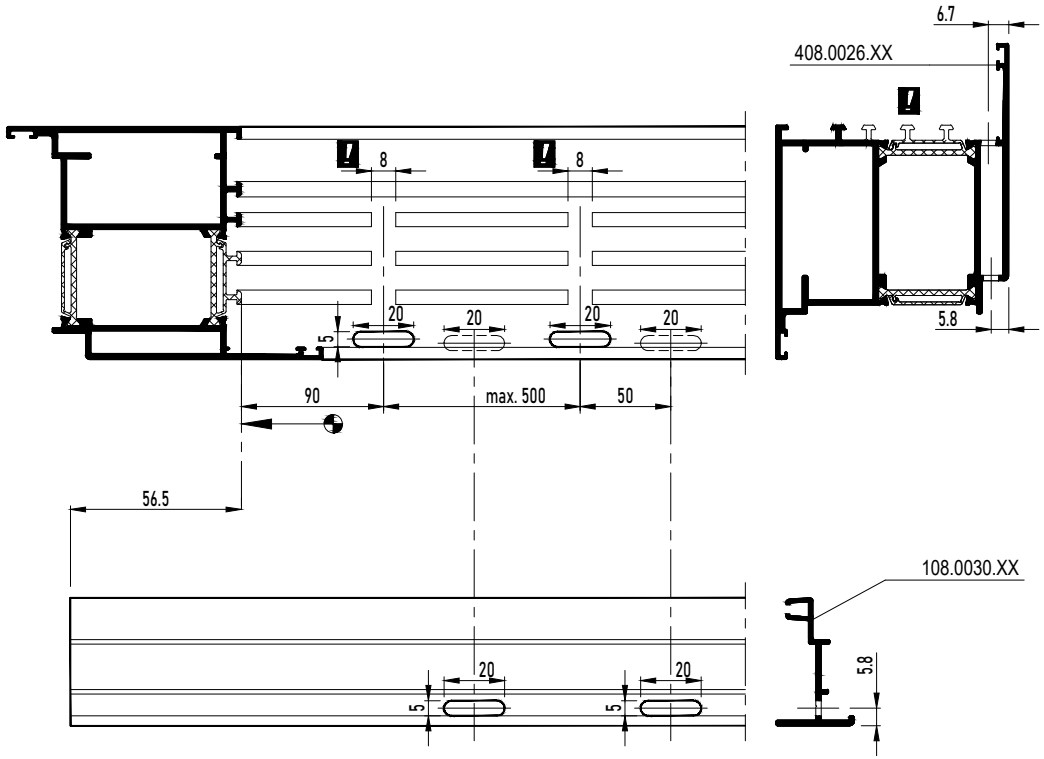

DRAINAGE CR INWARD OPENING

HIDDEN DRAINAGE VENT FLUSH DOOR

MASTERLINE 8-Fu

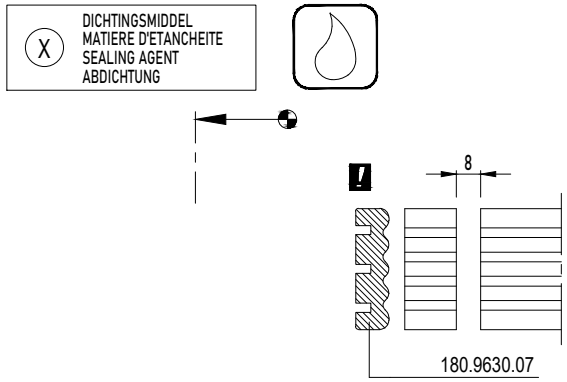

DRAINAGE CR MAGNETUDE PANEL DOOR

DRAINAGE MAGNETUDE VENT

MASTERLINE 8-Fu

	-	408.0214.XX 408.0224.XX 408.0226.XX
	095.E000.00 or 095.N300.00 or 095.B700.00 or 095.C300.00	
	095.B300.00	
	-	

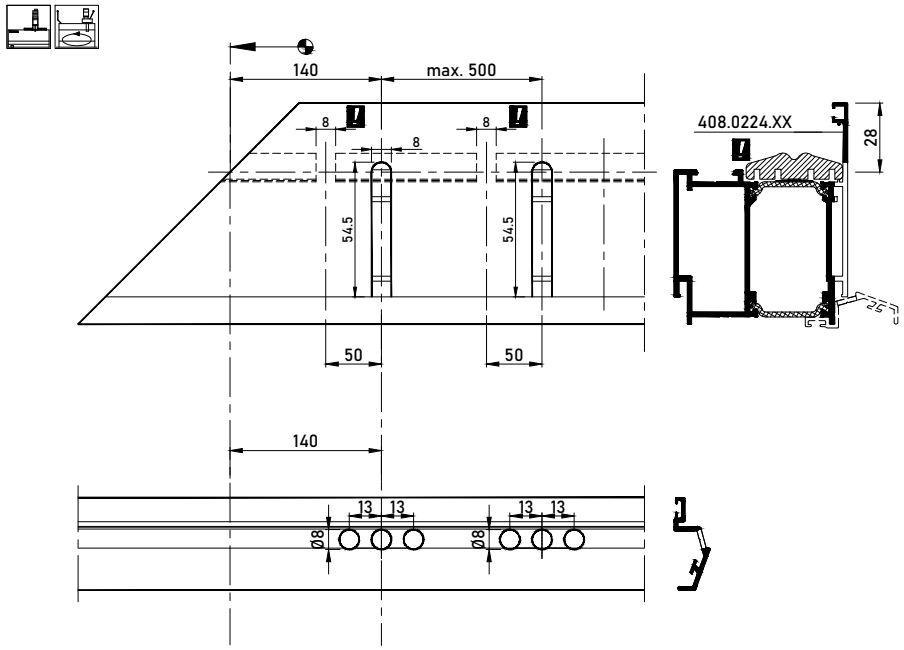

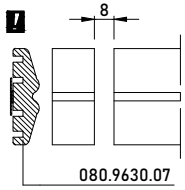

DRAINAGE CR OUTWARD OPENING

HIDDEN DRAINAGE VENT FLUSH DOOR

MASTERLINE 8-Fu

X DICHTINGSMIDDEL
MATIERE D'ETANCHEITE
SEALING AGENT
ABDICHTUNG

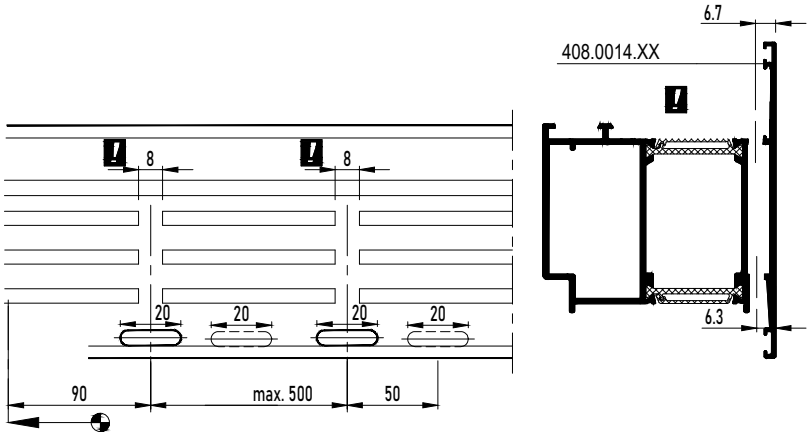

DRAINAGE CR OUTWARD OPENING

HIDDEN DRAINAGE VENT FLUSH DOOR

MASTERLINE 8-Fu

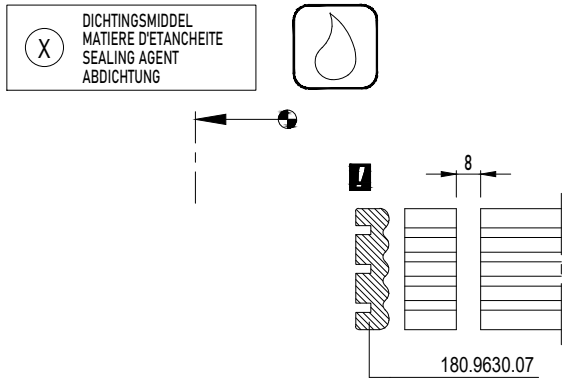

DRAINAGE CR PIVOT WINDOW

DRAINAGE PIVOT WINDOW

MASTERLINE 8-Fu

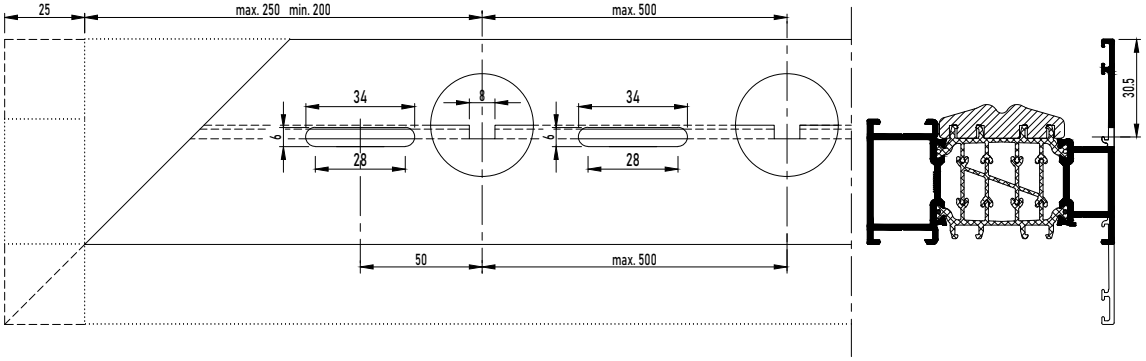

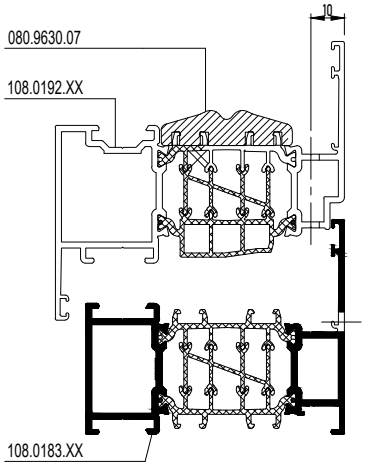

Ontwatering

VOLGORDE
1. Correct ponsen, boren of frezen
2. Ontbramen (indien noodzakelijk)
3. Stof en zaagresten verwijderen
4. Ontvetten met Degreaser, art. nr. 086.9210.--
5. Anticorrosieproduct aanbrengen, art. nr. 086.9208.--, 086.9225.--

Drainage

ORDRE
1. Poinçonnage, forage ou fraisage correct
2. Ebavurage (si nécessaire)
3. Enlèvement des poussières et des copeaux
4. Dégraissage avec Degreaser, art. nr. 086.9210.--
5. Application de produit anti-corrosion, art. nr. 086.9208.--, 086.9225.--

Drainage

SEQUENCE
1. Correct punching, drilling or milling
2. Deburring (if necessary)
3. Removing dust and saw-dust
4. Degreasing with Degreaser, art. nr. 086.9210.--
5. Applying anti-corrosion product, art. nr. 086.9208.--, 086.9225.--

Entwässerung

REIHENFOLGE
1. Stanzen, bohren oder fräsen
2. Entgraten (falls erforderlich)
3. Staub und Sägereste entfernen
4. Entfetten mit Degreaser, art. nr. 086.9210.--
5. Korrosionsschutzprodukt aufbringen, art. nr. 086.9208.--, 086.9225.--

DRAINAGE CR PIVOT WINDOW

DRAINAGE PIVOT WINDOW

MASTERLINE 8-Fu

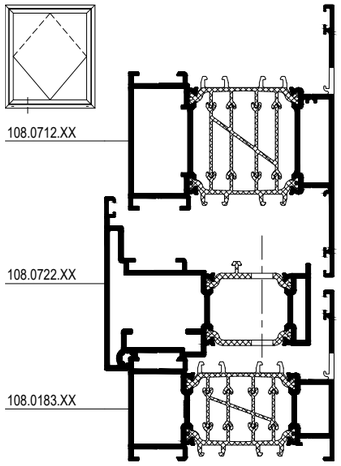

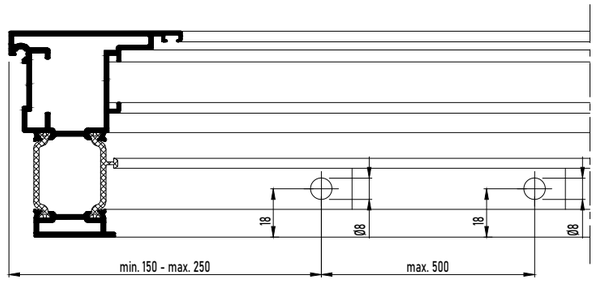

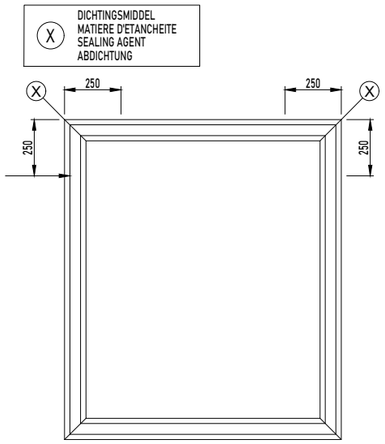

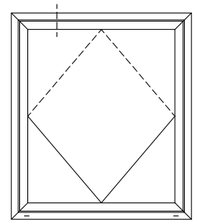

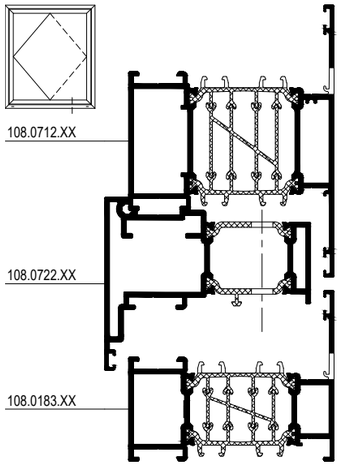

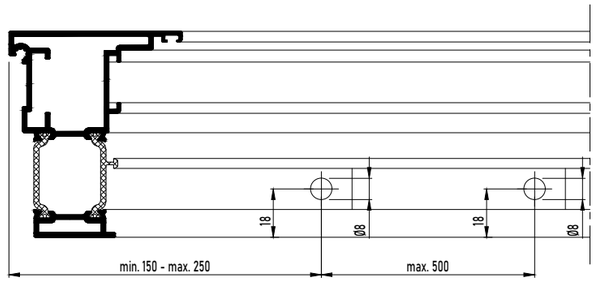

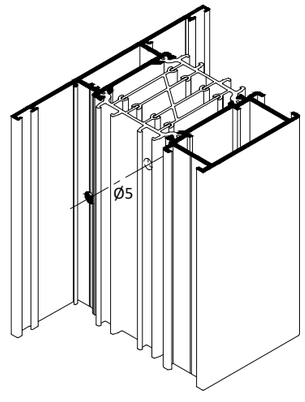

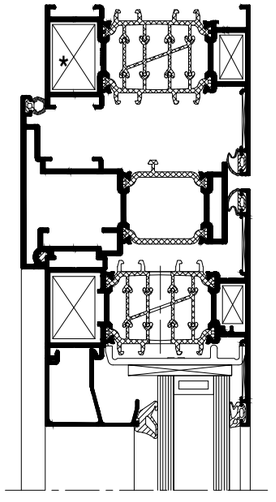

DRAINAGE JIG BALCONY DOOR 2024

DRAINAGE VENT

MASTERLINE 8-Fu

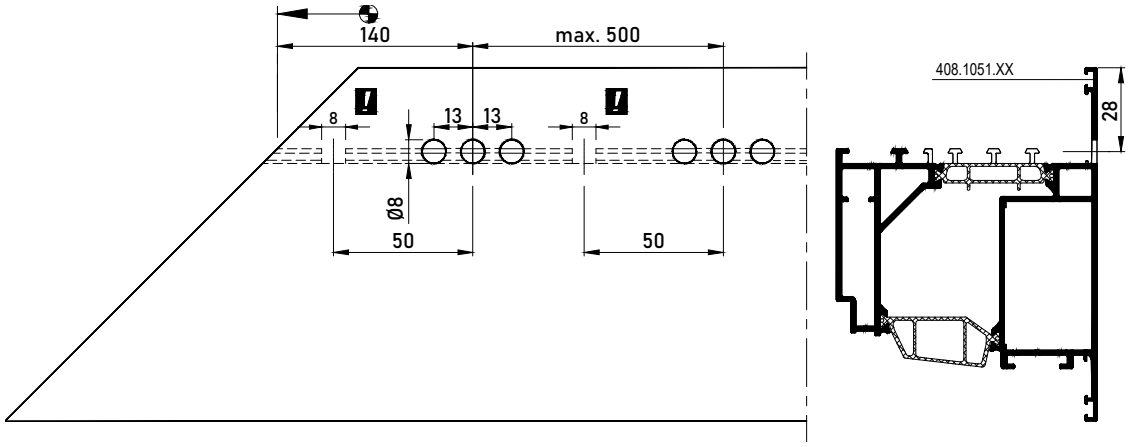

DRAINAGE JIG PIVOT WINDOW

DRAINAGE PIVOT WINDOW | 095.AKF6.00

MASTERLINE 8-Fu

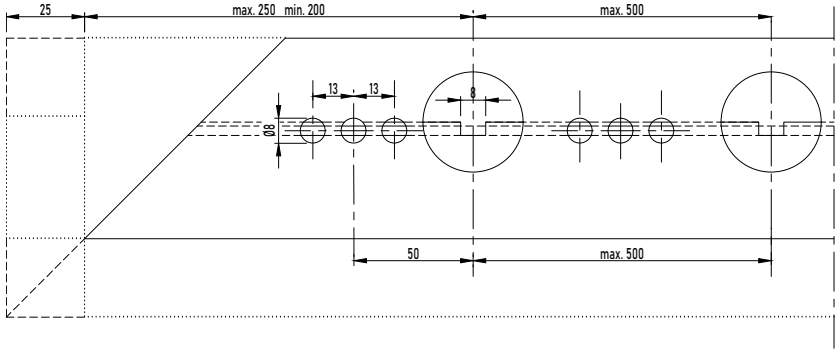

*enkel bij vast raam / pivot
*seulement pour fenêtre fixe / pivot
*only for fixed window / pivot
*nur bei festverglasung / pivot

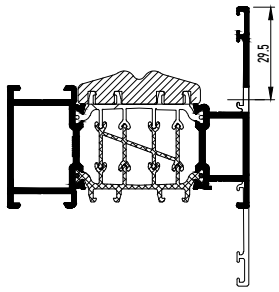

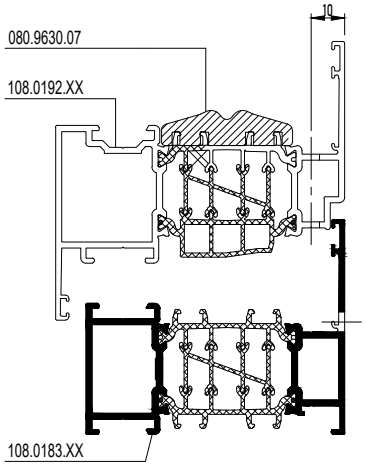

Ontwatering

VOLGORDE
1. Correct ponsen, boren of frezen
2. Ontbramen (Indien noodzakelijk)
3. Stof en zaagresten verwijderen
4. Ontvetten met Degreaser, art. nr. 086.9210.--
5. Anticorrosieproduct aanbrengen, art. nr. 086.9208.--, 086.9225.--

Drainage

ORDRE
1. Poinçonnage, forage ou fraisage correct
2. Ebavurage (si nécessaire)
3. Enlèvement des poussières et des copeaux
4. Dégraissage avec Degreaser, art. nr. 086.9210.--
5. Application de produit anti-corrosion, art. nr. 086.9208.--, 086.9225.--

Drainage

SEQUENCE
1. Correct punching, drilling or milling
2. Deburring (if necessary)
3. Removing dust and saw-dust
4. Degreasing with Degreaser, art. nr. 086.9210.--
5. Applying anti-corrosion product, art. nr. 086.9208.--, 086.9225.--

Entwässerung

REIHENFOLGE
1. Stanzen, bohren oder fräsen
2. Entgraten (falls erforderlich)
3. Staub und Sägereste entfernen
4. Entfetten mit Degreaser, art. nr. 086.9210.--
5. Korrosionsschutzprodukt aufbringen, art. nr. 086.9208.--, 086.9225.--

DRAINAGE JIG PIVOT WINDOW

DRAINAGE PIVOT WINDOW | 095.AKF6.00

MASTERLINE 8-Fu

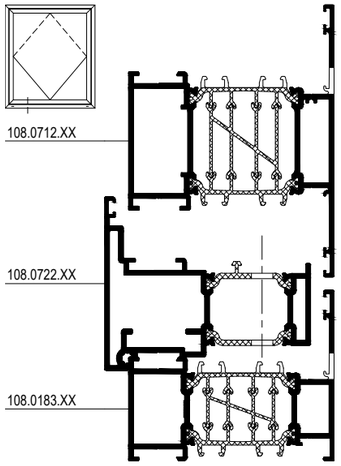

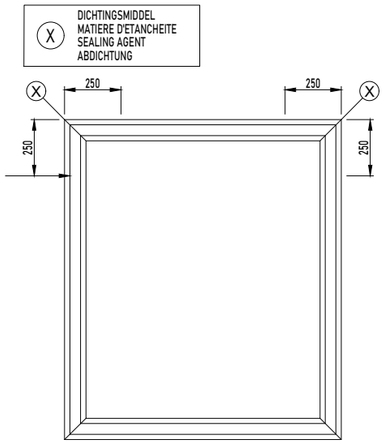

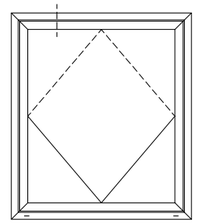

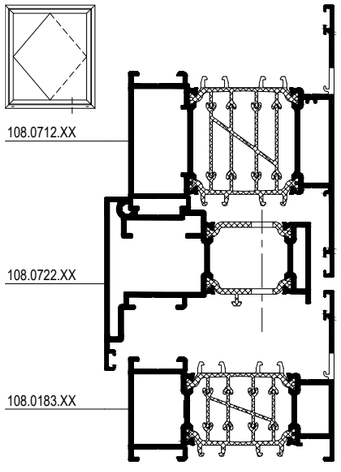

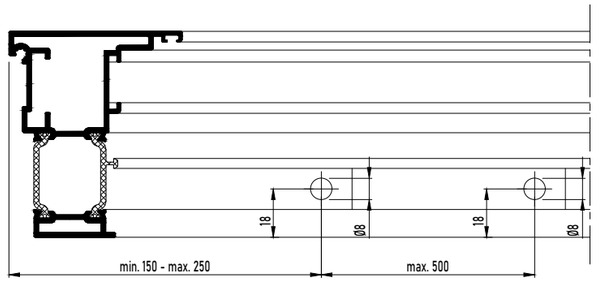

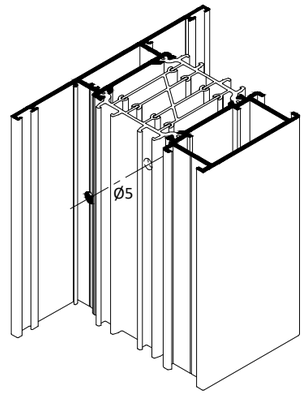

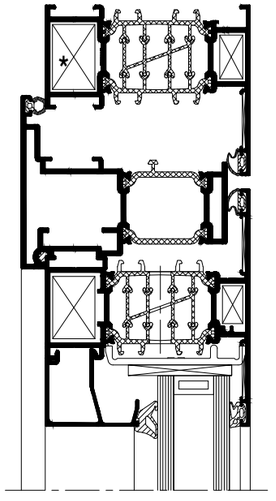

DRAINAGE JIG WINDOW-DOOR

DRAINAGE VENT

MASTERLINE 8-Fu

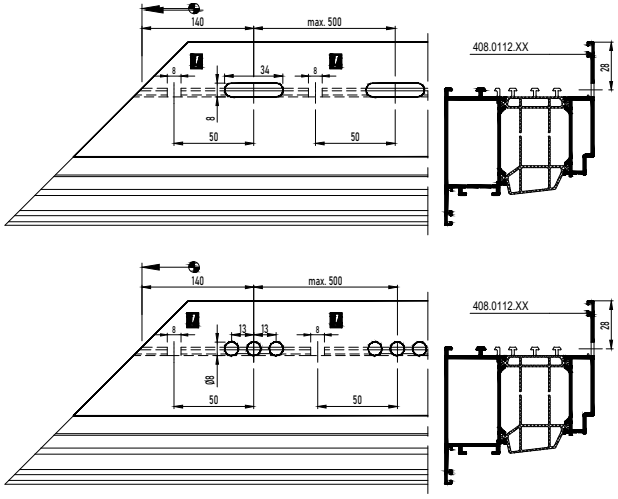

DRAINAGE JIG WINDOW-DOOR

DRAINAGE VENT

MASTERLINE 8-Fu

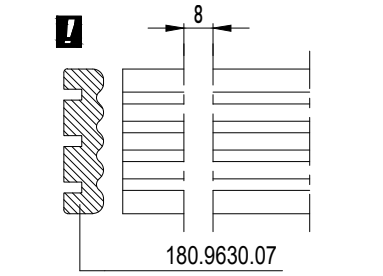

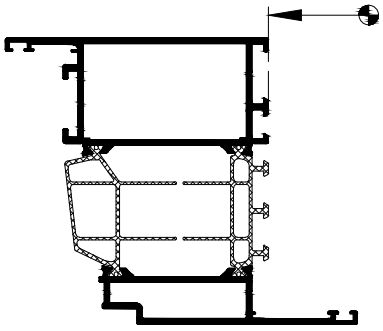

DRAINAGE JIG WINDOW-DOOR

DRAINAGE VENT

MASTERLINE 8-Fu

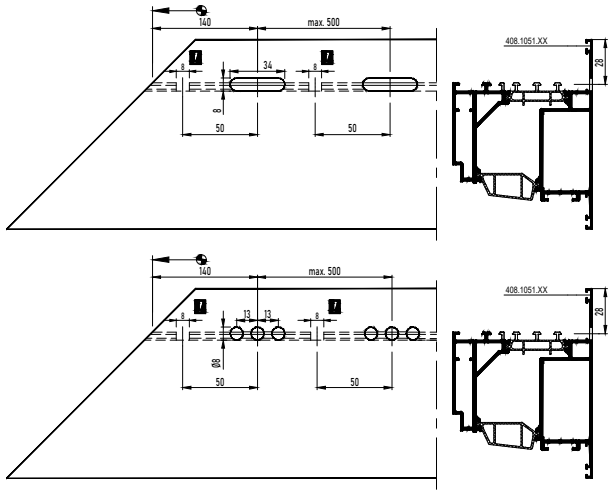

DRAINAGE JIG WINDOW-DOOR

DRAINAGE VENT

MASTERLINE 8-Fu

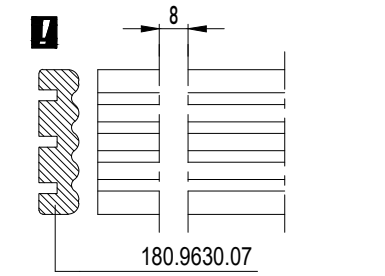

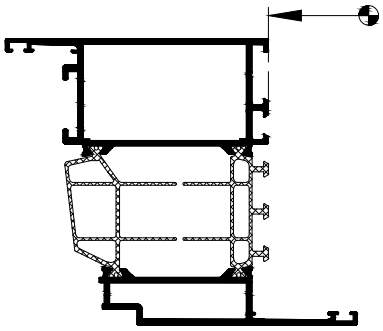

DRAINAGE MC INWARD OPENING

HIDDEN DRAINAGE VENT FLUSH DOOR

MASTERLINE 8-Fu

X DICHTINGSMIDDEL
MATIERE D'ETANCHEITE
SEALING AGENT
ABDICHTUNG

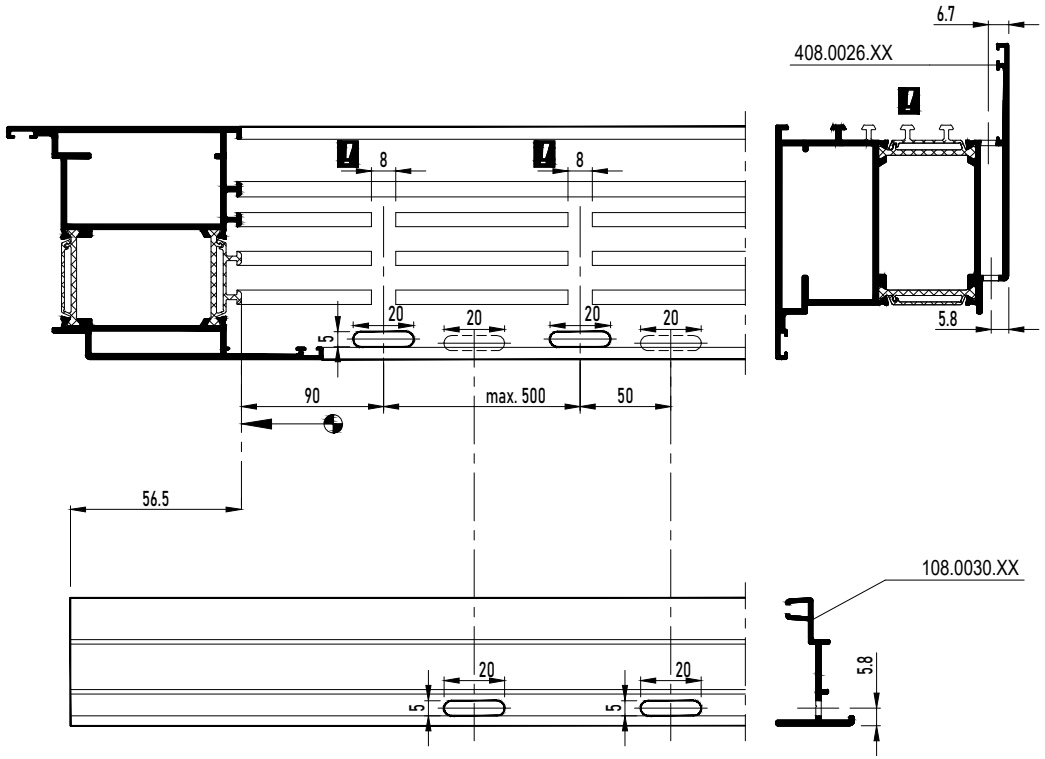

DRAINAGE MC INWARD OPENING

HIDDEN DRAINAGE VENT FLUSH DOOR

MASTERLINE 8-Fu

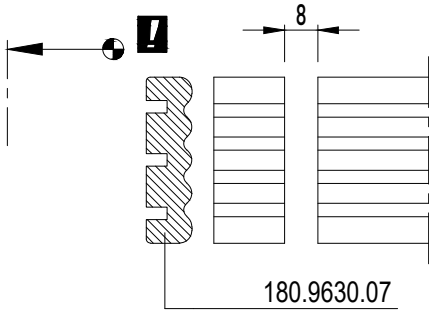

DRAINAGE MC MAGNETUDE PANEL DOOR

DRAINAGE MAGNETUDE VENT

MASTERLINE 8-Fu

	-	408.0214.XX 408.0224.XX 408.0226.XX
	095.E000.00 or 095.N300.00 or 095.B700.00 or 095.C300.00	
	095.B300.00	
	-	

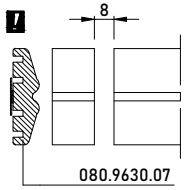

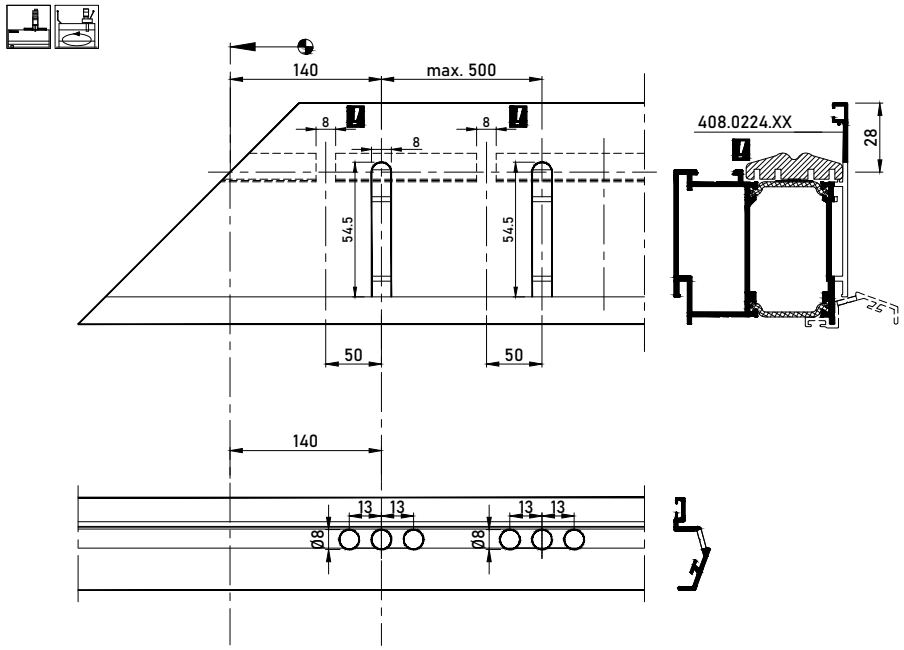

DRAINAGE MC OUTWARD OPENING

HIDDEN DRAINAGE VENT FLUSH DOOR

MASTERLINE 8-Fu

X DICHTINGSMIDDEL
MATIERE D'ETANCHEITE
SEALING AGENT
ABDICHTUNG

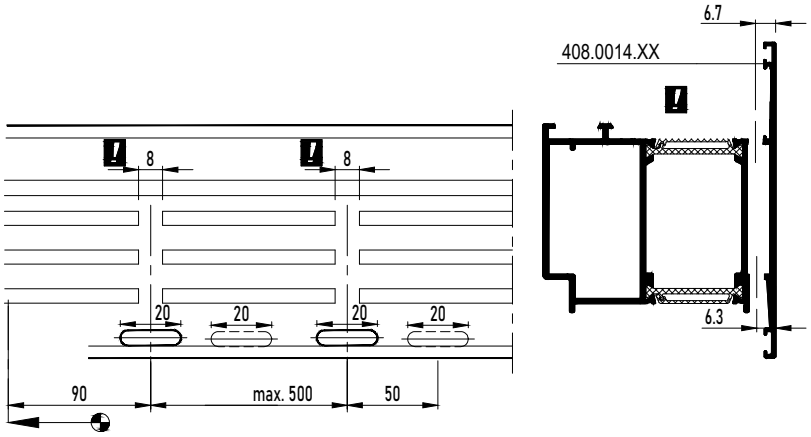

DRAINAGE MC OUTWARD OPENING

HIDDEN DRAINAGE VENT FLUSH DOOR

MASTERLINE 8-Fu

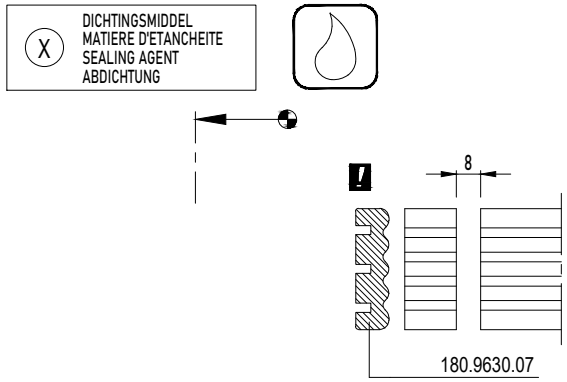

DRAINAGE MC PIVOT WINDOW

DRAINAGE PIVOT WINDOW

MASTERLINE 8-Fu

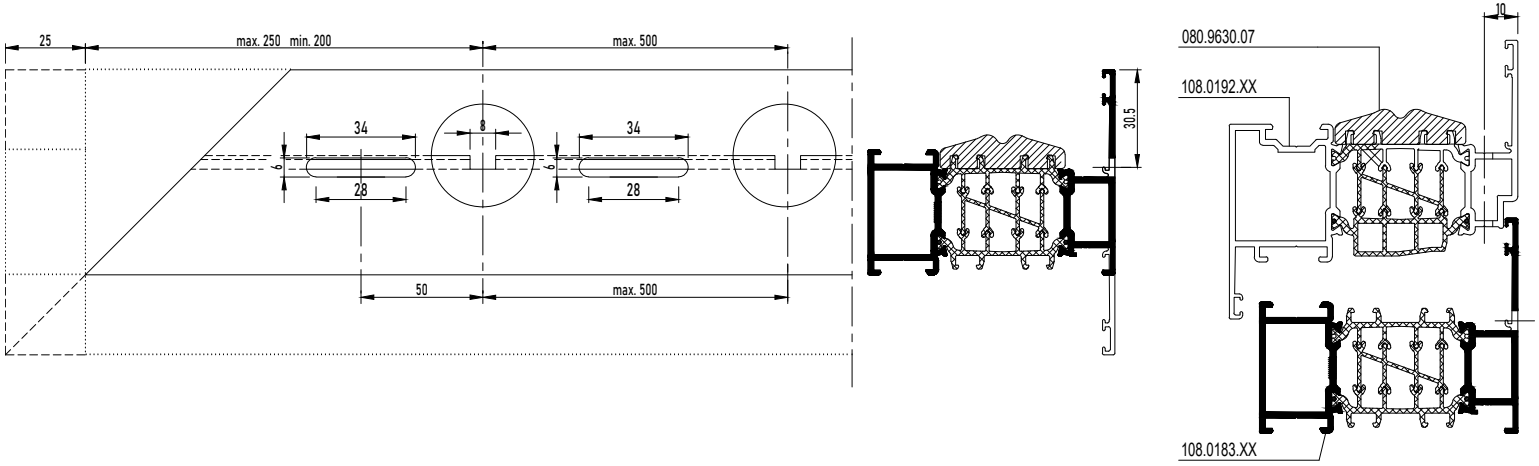

DRAINAGE MC PIVOT WINDOW

DRAINAGE PIVOT WINDOW

MASTERLINE 8-Fu

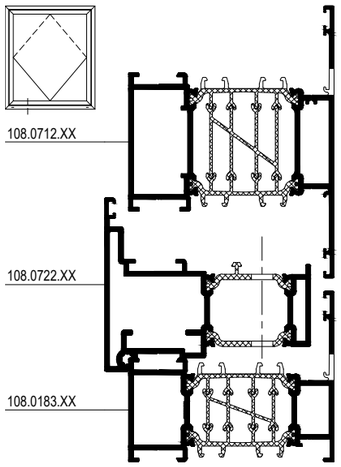

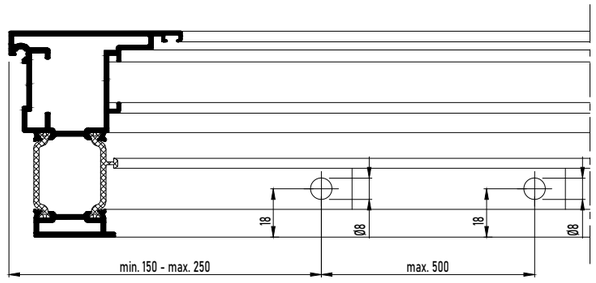

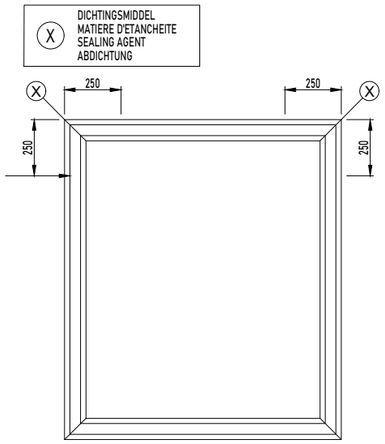

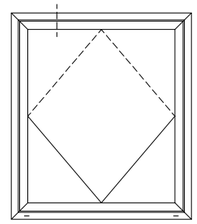

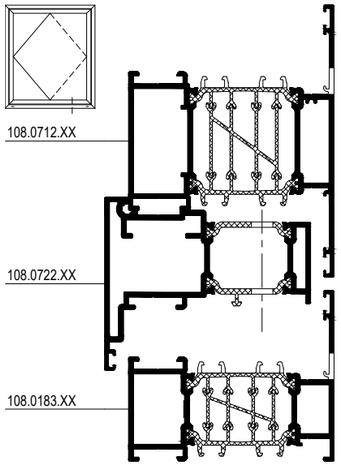

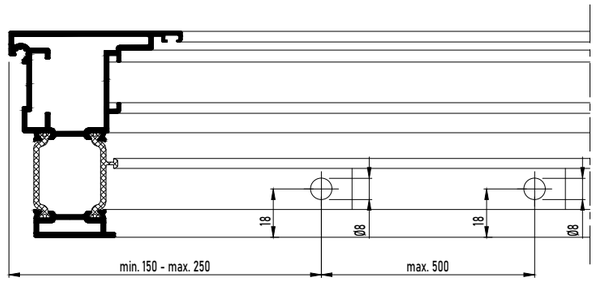

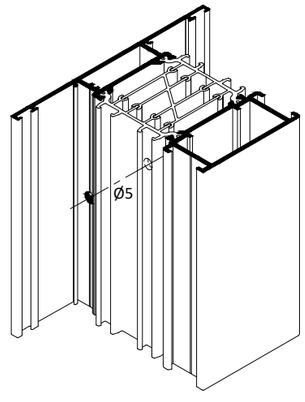

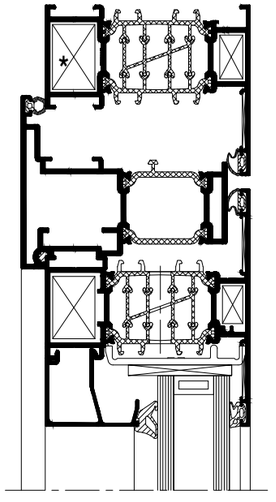

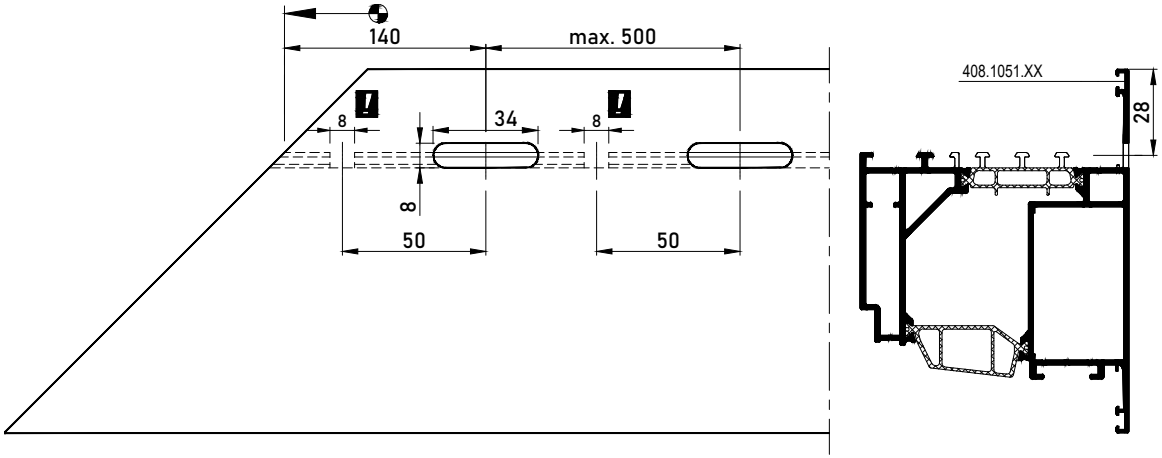
140
max. 500
8
34
8
8
50
50
408.1051.XX
28

DRAINAGE MFPT PIVOT WINDOW

DRAINAGE PIVOT WINDOW | 095.C600.00, 097.Y500.00, 095.AKF6.00

MASTERLINE 8-Fu

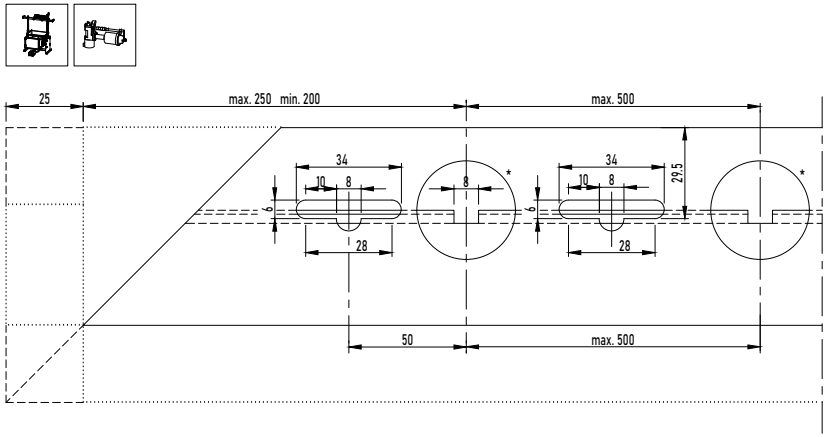

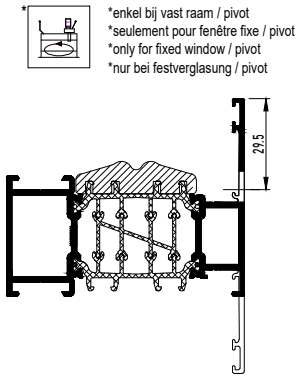

*enkel bij vast raam / pivot
*seulement pour fenêtre fixe / pivot
*only for fixed window / pivot
*nur bei festverglasung / pivot

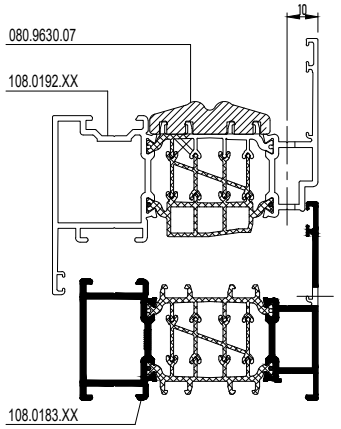

DRAINAGE MFPT PIVOT WINDOW

DRAINAGE PIVOT WINDOW | 095.C600.00, 097.Y500.00, 095.AKF6.00

MASTERLINE 8-Fu

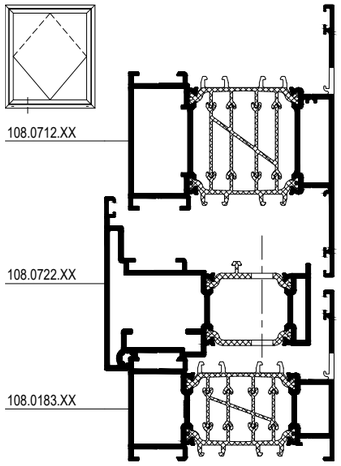

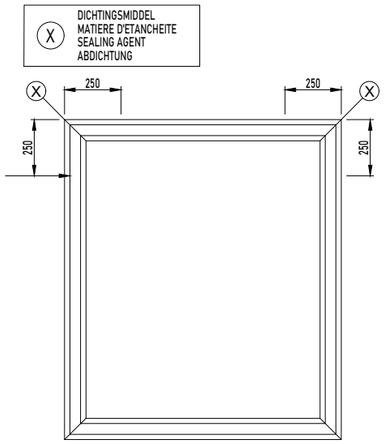

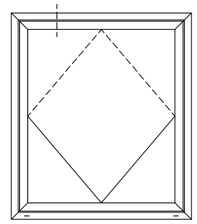

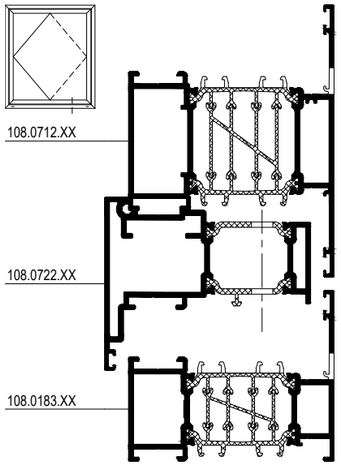

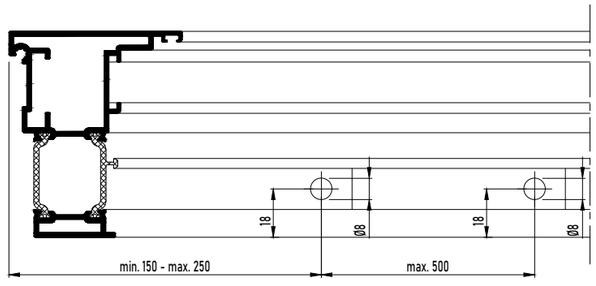

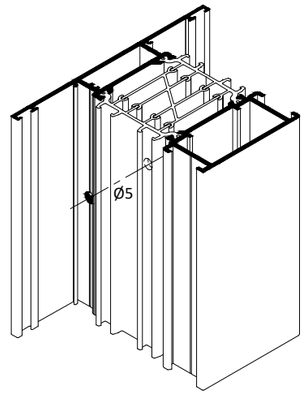

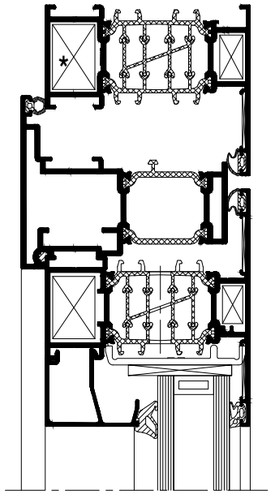

DRAINAGE MFPT PIVOT WINDOW

DRAINAGE PIVOT WINDOW | 097.C600.00, 097.Y500.00

MASTERLINE 8-Fu

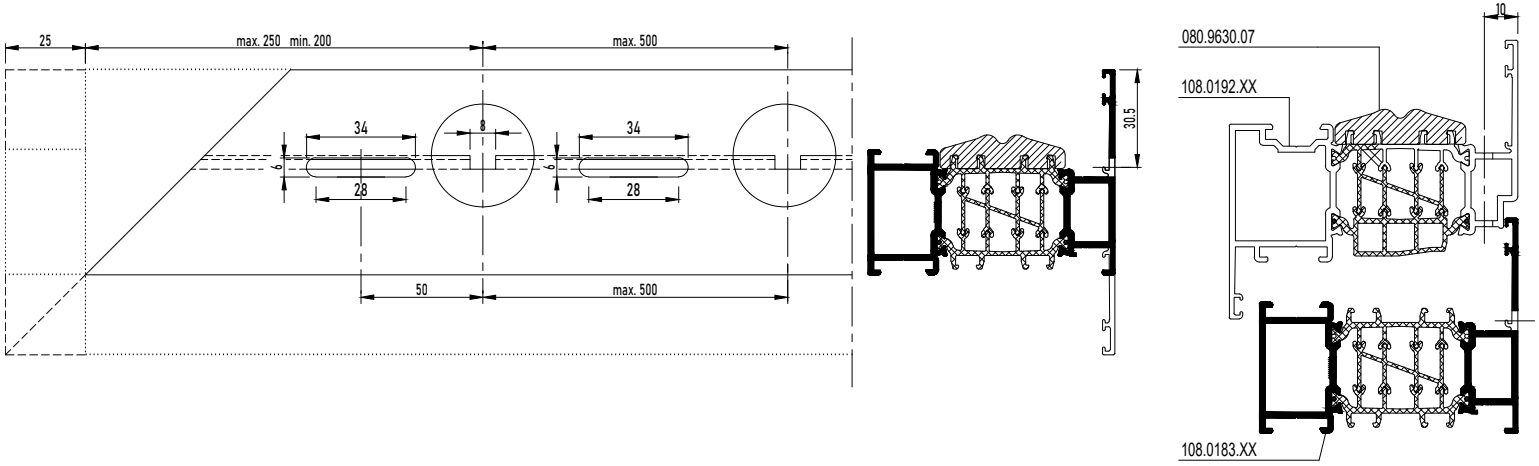

DRAINAGE MFPT PIVOT WINDOW

DRAINAGE PIVOT WINDOW | 097.C600.00, 097.Y500.00

MASTERLINE 8-Fu

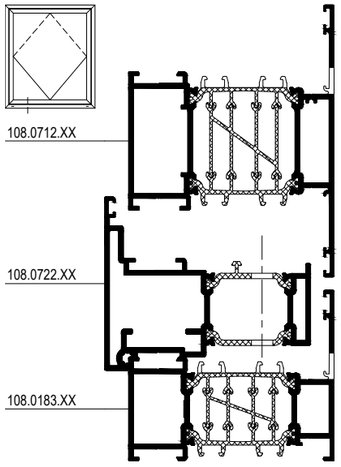

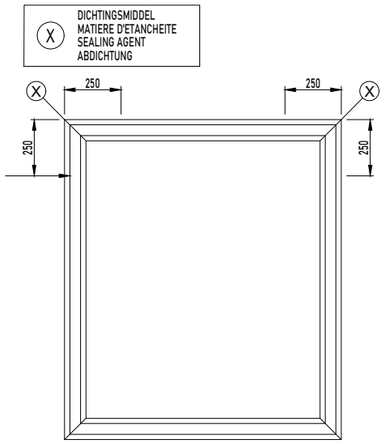

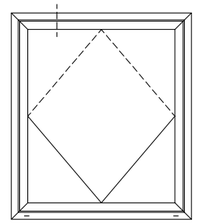

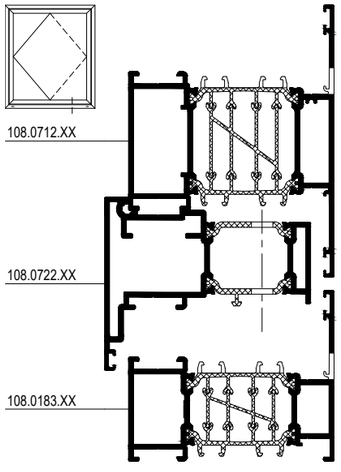

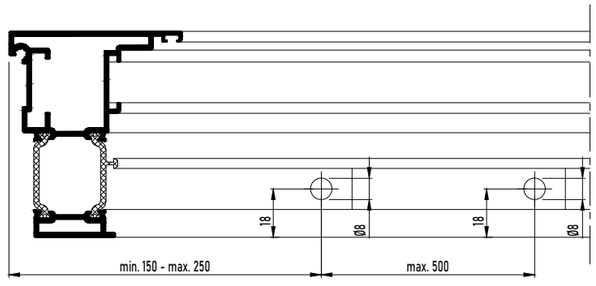

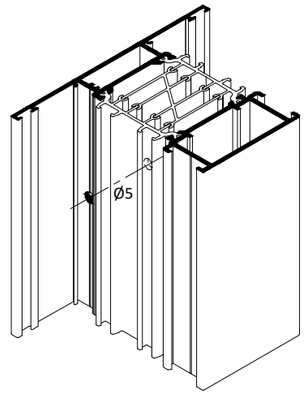

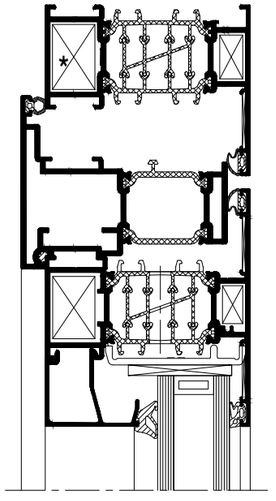

GLUE JIG MAGNETUDE PANEL DOOR

GLUE INJECTION + CORNER CONNECTION 197.D600.00

MASTERLINE 8-Fu

TYPE 1

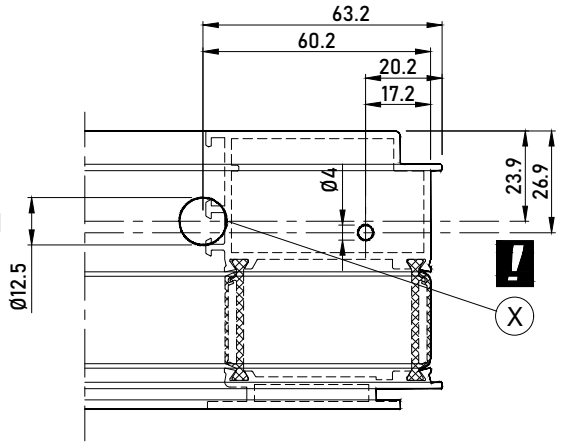

LIJMINJECTIE NA VERBINDING
INJECTION DE COLLE APRÈS LA CONNEXION
GLUE INJECTION AFTER CONNECTION
KLEBEINJEKTION NACH DEM ANSCHLUSS

LIJMINJECTIE VOOR VERBINDING
INJECTION DE COLLE AVANT LA CONNEXION
GLUE INJECTION BEFORE CONNECTION
KLEBEINJEKTION VOR ANSCHLUSS

TYPE 2

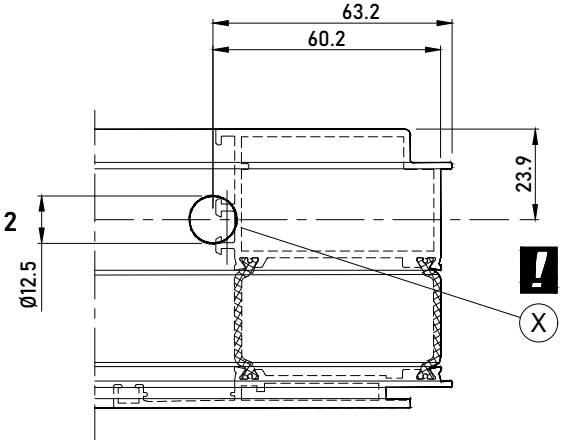

LIJMINJECTIE NA VERBINDING
INJECTION DE COLLE APRÈS LA CONNEXION
GLUE INJECTION AFTER CONNECTION
KLEBEINJEKTION NACH DEM ANSCHLUSS

LIJMINJECTIE VOOR VERBINDING
INJECTION DE COLLE AVANT LA CONNEXION
GLUE INJECTION BEFORE CONNECTION
KLEBEINJEKTION VOR ANSCHLUSS

LIJMINJECTIE NA VERBINDING
INJECTION DE COLLE APRÈS LA CONNEXION
GLUE INJECTION AFTER CONNECTION
KLEBEINJEKTION NACH DEM ANSCHLUSS

(X) DICHTINGSMIDDEL
MATIERE D'ETANCHEITE
SEALING AGENT
ABDICHTUNG

GLUE JIG MAGNETUDE PANEL DOOR

GLUE INJECTION + CORNER CONNECTION 197.D600.00

MASTERLINE 8-Fu

TYPE 1

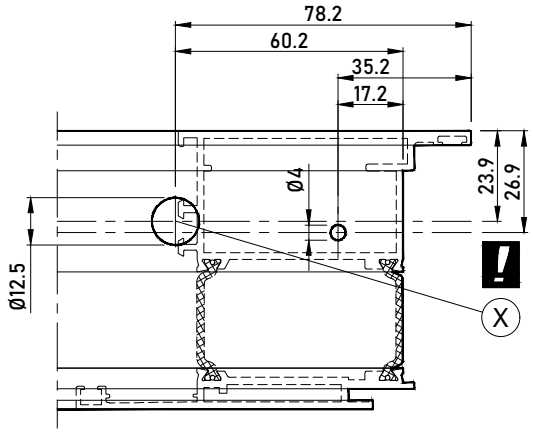

LIJMINJECTIE NA VERBINDING
INJECTION DE COLLE APRÈS LA CONNEXION
GLUE INJECTION AFTER CONNECTION
KLEBEINJEKTION NACH DEM ANSCHLUSS

LIJMINJECTIE VOOR VERBINDING
INJECTION DE COLLE AVANT LA CONNEXION
GLUE INJECTION BEFORE CONNECTION
KLEBEINJEKTION VOR ANSCHLUSS

TYPE 2

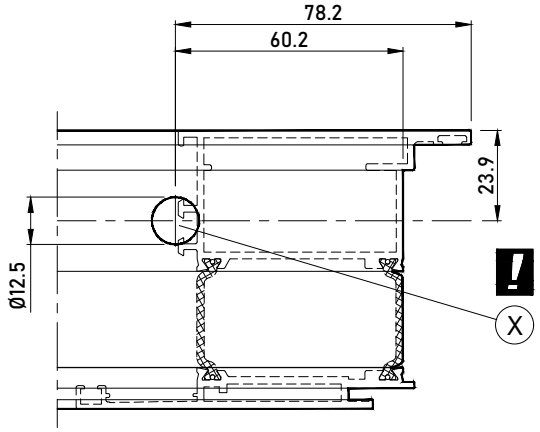

LIJMINJECTIE NA VERBINDING
INJECTION DE COLLE APRÈS LA CONNEXION
GLUE INJECTION AFTER CONNECTION
KLEBEINJEKTION NACH DEM ANSCHLUSS

LIJMINJECTIE VOOR VERBINDING
INJECTION DE COLLE AVANT LA CONNEXION
GLUE INJECTION BEFORE CONNECTION
KLEBEINJEKTION VOR ANSCHLUSS

LIJMINJECTIE NA VERBINDING
INJECTION DE COLLE APRÈS LA CONNEXION
GLUE INJECTION AFTER CONNECTION
KLEBEINJEKTION NACH DEM ANSCHLUSS

X DICHTINGSMIDDEL
MATIERE D'ETANCHEITE
SEALING AGENT
ABDICHTUNG

GLUE JIG MAGNETUDE PANEL DOOR

GLUE INJECTION + CORNER CONNECTION 197.D600.00

MASTERLINE 8-Fu

TYPE 1

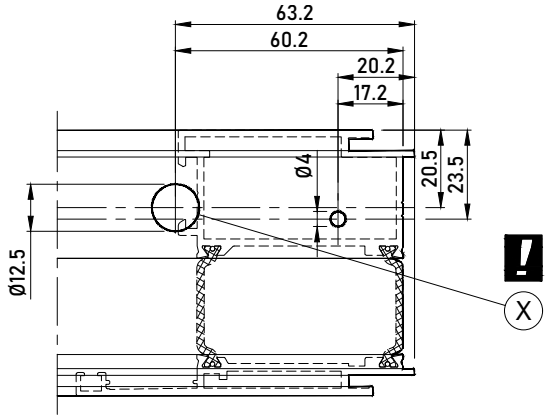

LIJMINJECTIE NA VERBINDING
INJECTION DE COLLE APRÈS LA CONNEXION
GLUE INJECTION AFTER CONNECTION
KLEBEINJEKTION NACH DEM ANSCHLUSS

LIJMINJECTIE VOOR VERBINDING
INJECTION DE COLLE AVANT LA CONNEXION
GLUE INJECTION BEFORE CONNECTION
KLEBEINJEKTION VOR ANSCHLUSS

TYPE 2

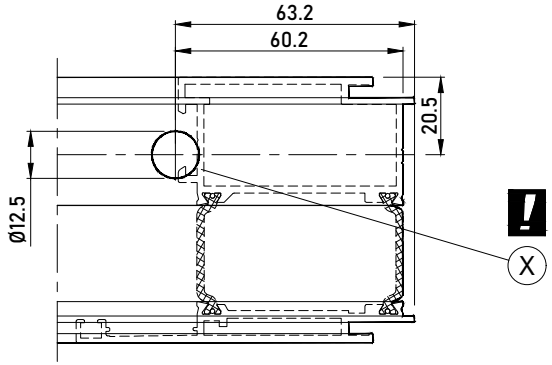

LIJMINJECTIE NA VERBINDING
INJECTION DE COLLE APRÈS LA CONNEXION
GLUE INJECTION AFTER CONNECTION
KLEBEINJEKTION NACH DEM ANSCHLUSS

LIJMINJECTIE VOOR VERBINDING
INJECTION DE COLLE AVANT LA CONNEXION
GLUE INJECTION BEFORE CONNECTION
KLEBEINJEKTION VOR ANSCHLUSS

LIJMINJECTIE NA VERBINDING
INJECTION DE COLLE APRÈS LA CONNEXION
GLUE INJECTION AFTER CONNECTION
KLEBEINJEKTION NACH DEM ANSCHLUSS

X DICHTINGSMIDDEL
MATIERE D'ETANCHEITE
SEALING AGENT
ABDICHTUNG

GLUE MC MAGNETUDE PANEL DOOR

GLUE INJECTION + CORNER CONNECTION 197.D600.00

MASTERLINE 8-Fu

TYPE 1

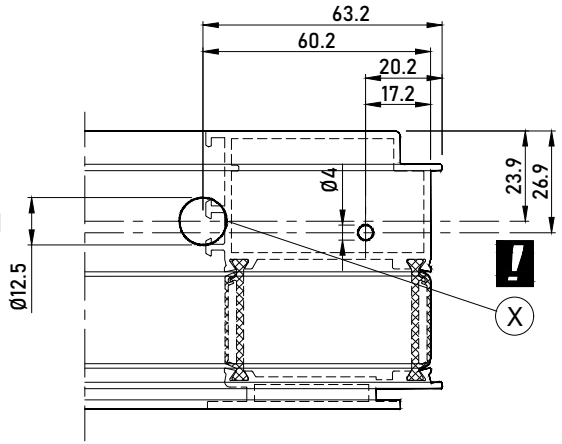

LIJMINJECTIE NA VERBINDING
INJECTION DE COLLE APRÈS LA CONNEXION
GLUE INJECTION AFTER CONNECTION
KLEBEINJEKTION NACH DEM ANSCHLUSS

LIJMINJECTIE VOOR VERBINDING
INJECTION DE COLLE AVANT LA CONNEXION
GLUE INJECTION BEFORE CONNECTION
KLEBEINJEKTION VOR ANSCHLUSS

TYPE 2

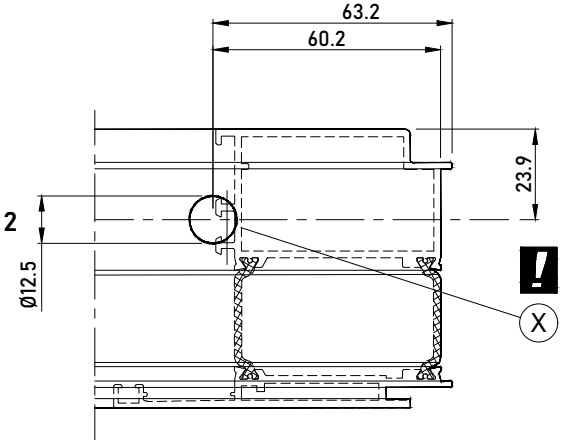

LIJMINJECTIE NA VERBINDING
INJECTION DE COLLE APRÈS LA CONNEXION
GLUE INJECTION AFTER CONNECTION
KLEBEINJEKTION NACH DEM ANSCHLUSS

LIJMINJECTIE VOOR VERBINDING
INJECTION DE COLLE AVANT LA CONNEXION
GLUE INJECTION BEFORE CONNECTION
KLEBEINJEKTION VOR ANSCHLUSS

LIJMINJECTIE NA VERBINDING
INJECTION DE COLLE APRÈS LA CONNEXION
GLUE INJECTION AFTER CONNECTION
KLEBEINJEKTION NACH DEM ANSCHLUSS

(X) DICHTINGSMIDDEL
MATIERE D'ETANCHEITE
SEALING AGENT
ABDICHTUNG

GLUE MC MAGNETUDE PANEL DOOR

GLUE INJECTION + CORNER CONNECTION 197.D600.00

MASTERLINE 8-Fu

TYPE 1

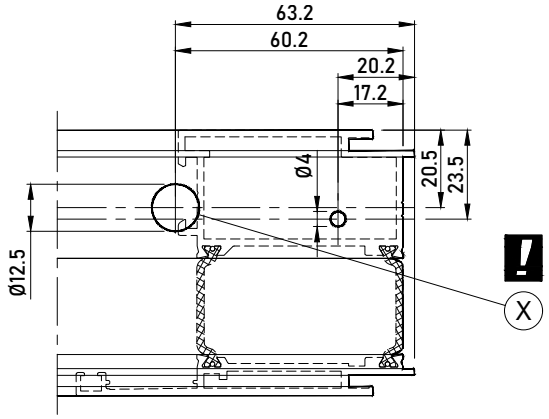

LIJMINJECTIE NA VERBINDING
INJECTION DE COLLE APRÈS LA CONNEXION
GLUE INJECTION AFTER CONNECTION
KLEBEINJEKTION NACH DEM ANSCHLUSS

LIJMINJECTIE VOOR VERBINDING
INJECTION DE COLLE AVANT LA CONNEXION
GLUE INJECTION BEFORE CONNECTION
KLEBEINJEKTION VOR ANSCHLUSS

TYPE 2

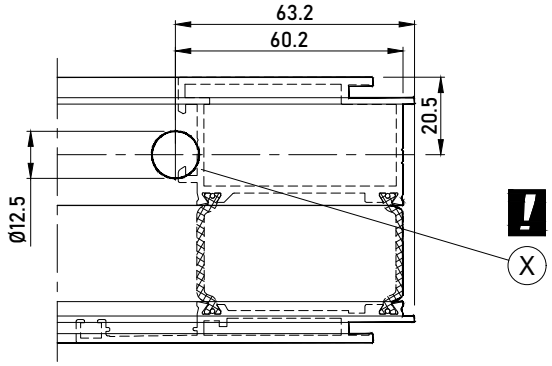

LIJMINJECTIE NA VERBINDING
INJECTION DE COLLE APRÈS LA CONNEXION
GLUE INJECTION AFTER CONNECTION
KLEBEINJEKTION NACH DEM ANSCHLUSS

LIJMINJECTIE VOOR VERBINDING
INJECTION DE COLLE AVANT LA CONNEXION
GLUE INJECTION BEFORE CONNECTION
KLEBEINJEKTION VOR ANSCHLUSS

LIJMINJECTIE NA VERBINDING
INJECTION DE COLLE APRÈS LA CONNEXION
GLUE INJECTION AFTER CONNECTION
KLEBEINJEKTION NACH DEM ANSCHLUSS

X DICHTINGSMIDDEL
MATIERE D'ETANCHEITE
SEALING AGENT
ABDICHTUNG

GLUE MFPT MAGNETUDE PANEL DOOR

GLUE INJECTION + CORNER CONNECTION 197.D600.00 | 097.0183.00

MASTERLINE 8-Fu

TYPE 1

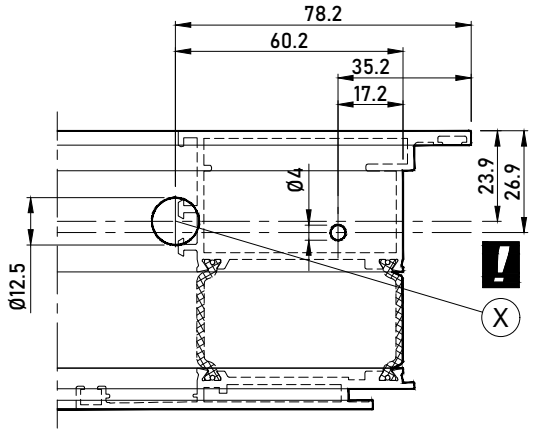

LIJMINJECTIE NA VERBINDING
INJECTION DE COLLE APRÈS LA CONNEXION
GLUE INJECTION AFTER CONNECTION
KLEBEINJEKTION NACH DEM ANSCHLUSS

LIJMINJECTIE VOOR VERBINDING
INJECTION DE COLLE AVANT LA CONNEXION
GLUE INJECTION BEFORE CONNECTION
KLEBEINJEKTION VOR ANSCHLUSS

TYPE 2

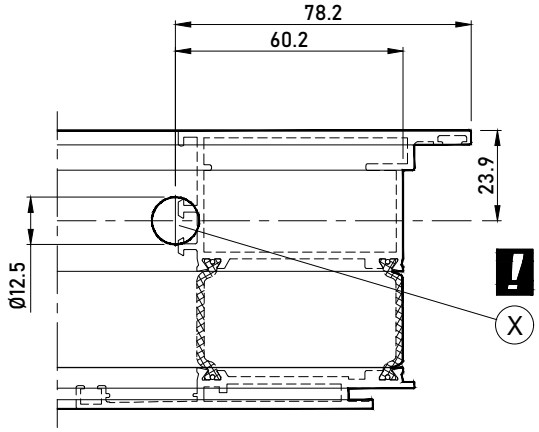

LIJMINJECTIE NA VERBINDING
INJECTION DE COLLE APRÈS LA CONNEXION
GLUE INJECTION AFTER CONNECTION
KLEBEINJEKTION NACH DEM ANSCHLUSS

LIJMINJECTIE VOOR VERBINDING
INJECTION DE COLLE AVANT LA CONNEXION
GLUE INJECTION BEFORE CONNECTION
KLEBEINJEKTION VOR ANSCHLUSS

LIJMINJECTIE NA VERBINDING
INJECTION DE COLLE APRÈS LA CONNEXION
GLUE INJECTION AFTER CONNECTION
KLEBEINJEKTION NACH DEM ANSCHLUSS

X DICHTINGSMIDDEL
MATIERE D'ETANCHEITE
SEALING AGENT
ABDICHTUNG

GLUE MFPT MAGNETUDE PANEL DOOR

GLUE INJECTION + CORNER CONNECTION 197.D600.00 | 097.0183.00

MASTERLINE 8-Fu

TYPE 1

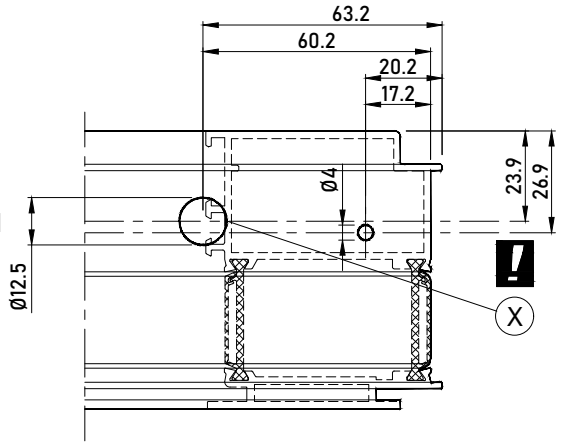

LIJMINJECTIE NA VERBINDING
INJECTION DE COLLE APRÈS LA CONNEXION
GLUE INJECTION AFTER CONNECTION
KLEBEINJEKTION NACH DEM ANSCHLUSS

LIJMINJECTIE VOOR VERBINDING
INJECTION DE COLLE AVANT LA CONNEXION
GLUE INJECTION BEFORE CONNECTION
KLEBEINJEKTION VOR ANSCHLUSS

TYPE 2

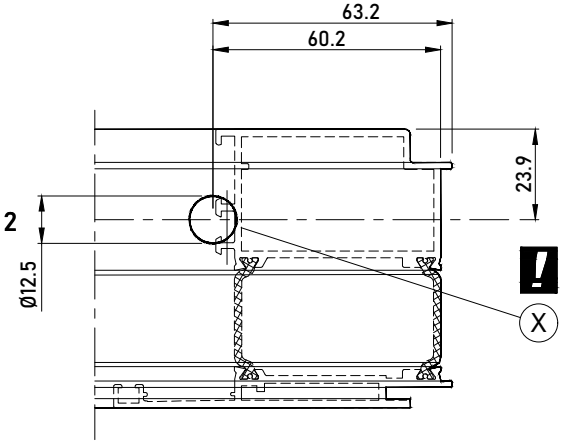

LIJMINJECTIE NA VERBINDING
INJECTION DE COLLE APRÈS LA CONNEXION
GLUE INJECTION AFTER CONNECTION
KLEBEINJEKTION NACH DEM ANSCHLUSS

LIJMINJECTIE VOOR VERBINDING
INJECTION DE COLLE AVANT LA CONNEXION
GLUE INJECTION BEFORE CONNECTION
KLEBEINJEKTION VOR ANSCHLUSS

LIJMINJECTIE NA VERBINDING
INJECTION DE COLLE APRÈS LA CONNEXION
GLUE INJECTION AFTER CONNECTION
KLEBEINJEKTION NACH DEM ANSCHLUSS

(X) DICHTINGSMIDDEL
MATIERE D'ETANCHEITE
SEALING AGENT
ABDICHTUNG

GLUE MFPT MAGNETUDE PANEL DOOR

GLUE INJECTION + CORNER CONNECTION 197.D600.00 | 097.0183.00

MASTERLINE 8-Fu

TYPE 1

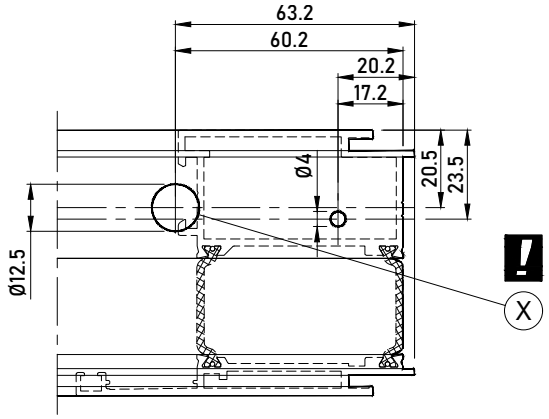

LIJMINJECTIE NA VERBINDING
INJECTION DE COLLE APRÈS LA CONNEXION
GLUE INJECTION AFTER CONNECTION
KLEBEINJEKTION NACH DEM ANSCHLUSS

LIJMINJECTIE VOOR VERBINDING
INJECTION DE COLLE AVANT LA CONNEXION
GLUE INJECTION BEFORE CONNECTION
KLEBEINJEKTION VOR ANSCHLUSS

TYPE 2

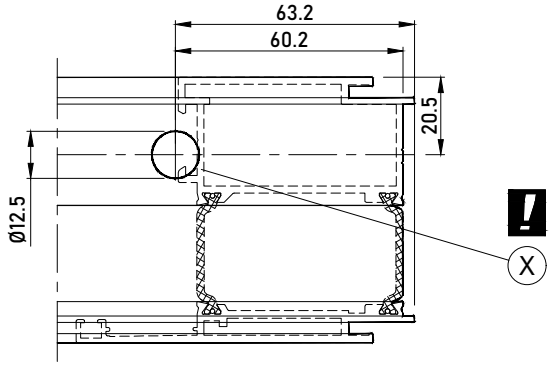

LIJMINJECTIE NA VERBINDING
INJECTION DE COLLE APRÈS LA CONNEXION
GLUE INJECTION AFTER CONNECTION
KLEBEINJEKTION NACH DEM ANSCHLUSS

LIJMINJECTIE VOOR VERBINDING
INJECTION DE COLLE AVANT LA CONNEXION
GLUE INJECTION BEFORE CONNECTION
KLEBEINJEKTION VOR ANSCHLUSS

LIJMINJECTIE NA VERBINDING
INJECTION DE COLLE APRÈS LA CONNEXION
GLUE INJECTION AFTER CONNECTION
KLEBEINJEKTION NACH DEM ANSCHLUSS

X DICHTINGSMIDDEL
MATIERE D'ETANCHEITE
SEALING AGENT
ABDICHTUNG

MAGNETUDE PANEL DOOR AUTOMATIC SEALING INWARD OPENING

MAGNETUDE PANEL DOOR INWARD OPENING WITH DOOR LATCH

MASTERLINE 8-Fu

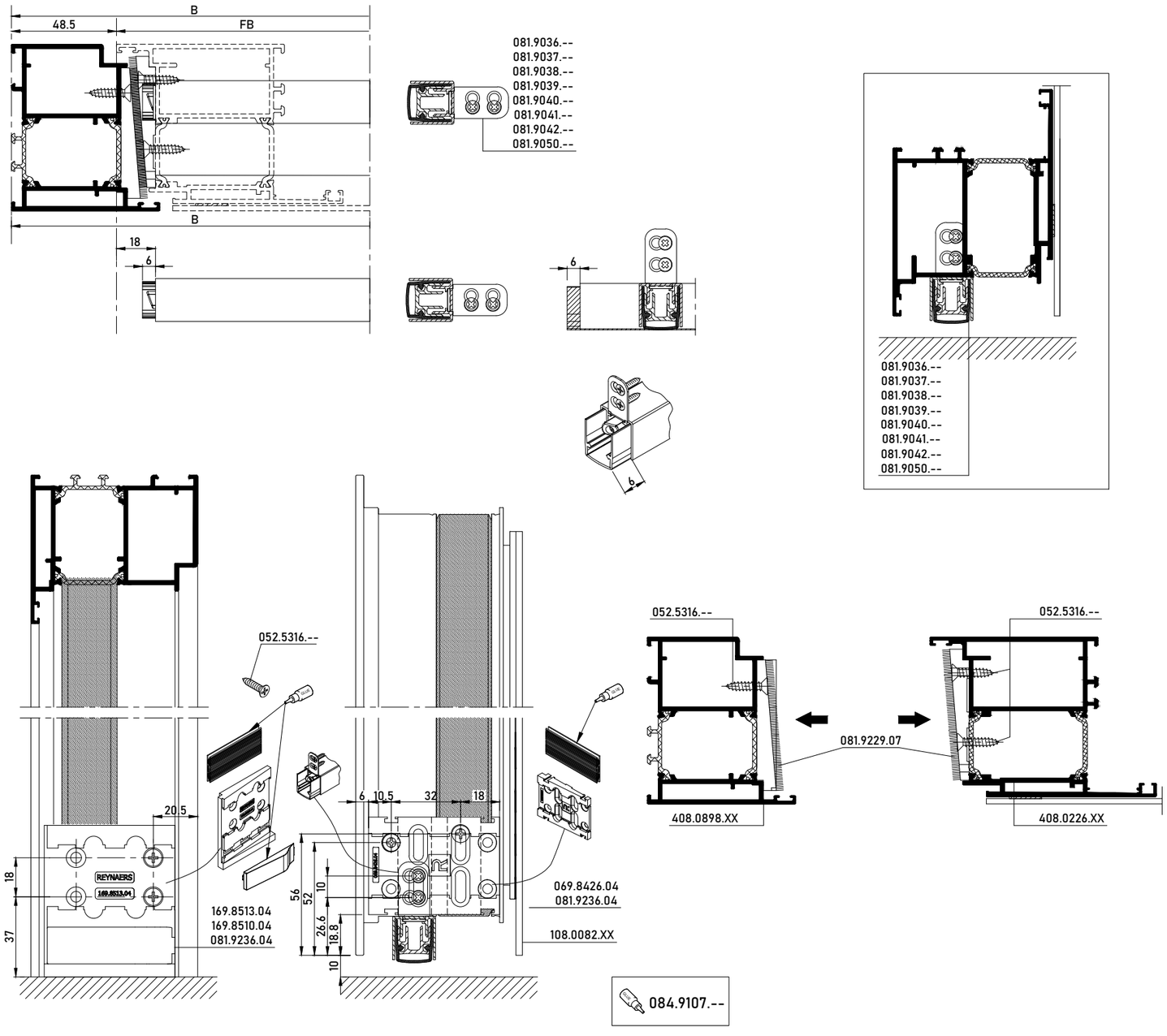

MAGNETUDE PANEL DOOR AUTOMATIC SEALING INWARD OPENING

MAGNETUDE PANEL DOOR INWARD OPENING WITH DOOR LATCH

MASTERLINE 8-Fu

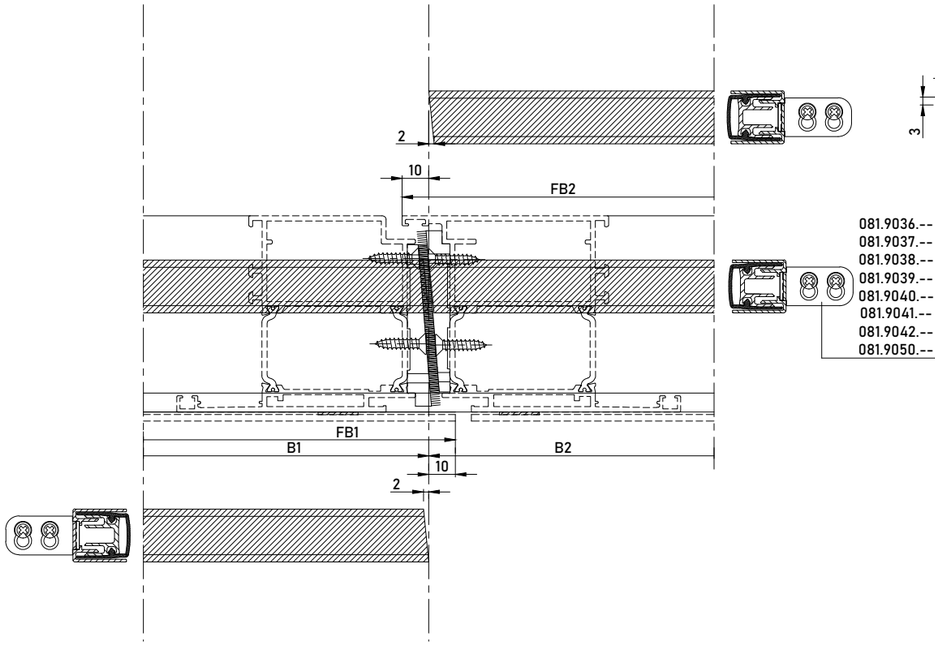

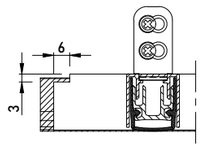



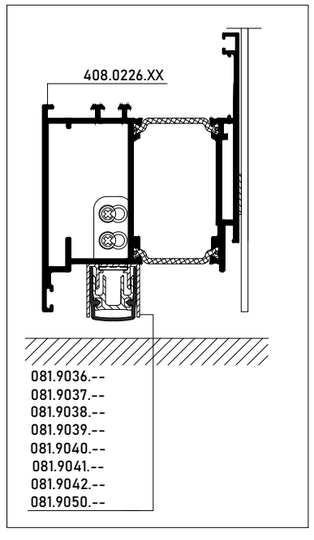

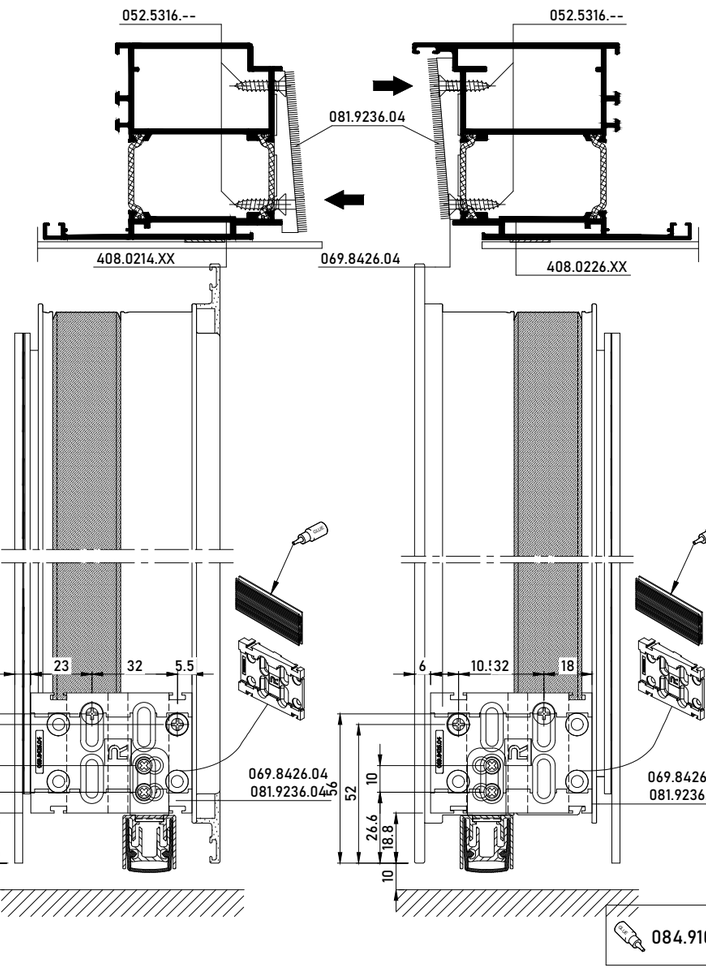

MAGNETUDE PANEL DOOR AUTOMATIC SEALING OUTWARD OPENING

MAGNETUDE PANEL DOOR OUTWARD OPENING WITH DOOR LATCH

MASTERLINE 8-Fu

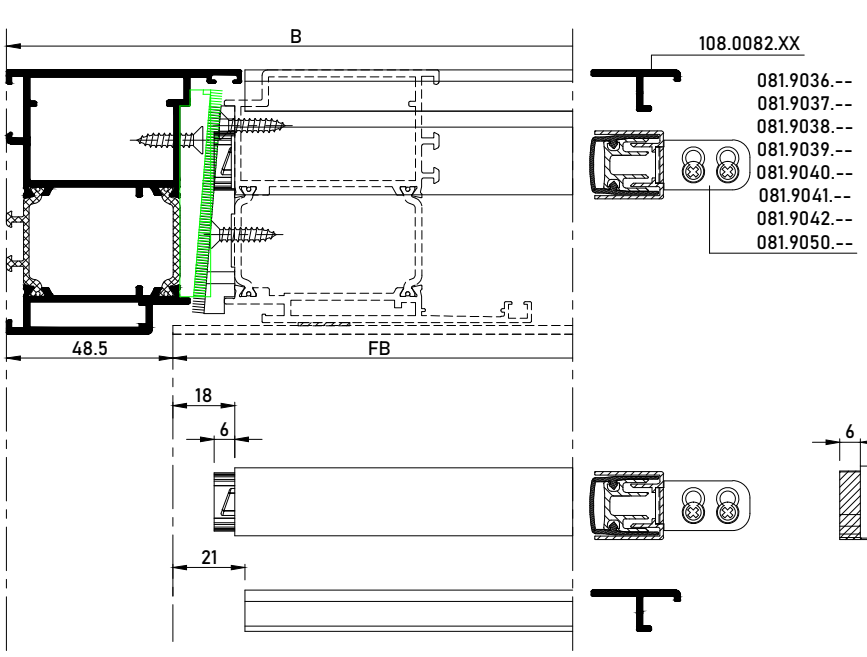

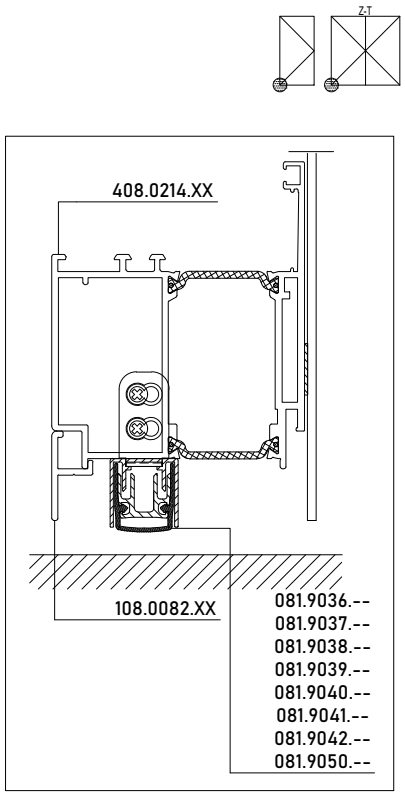

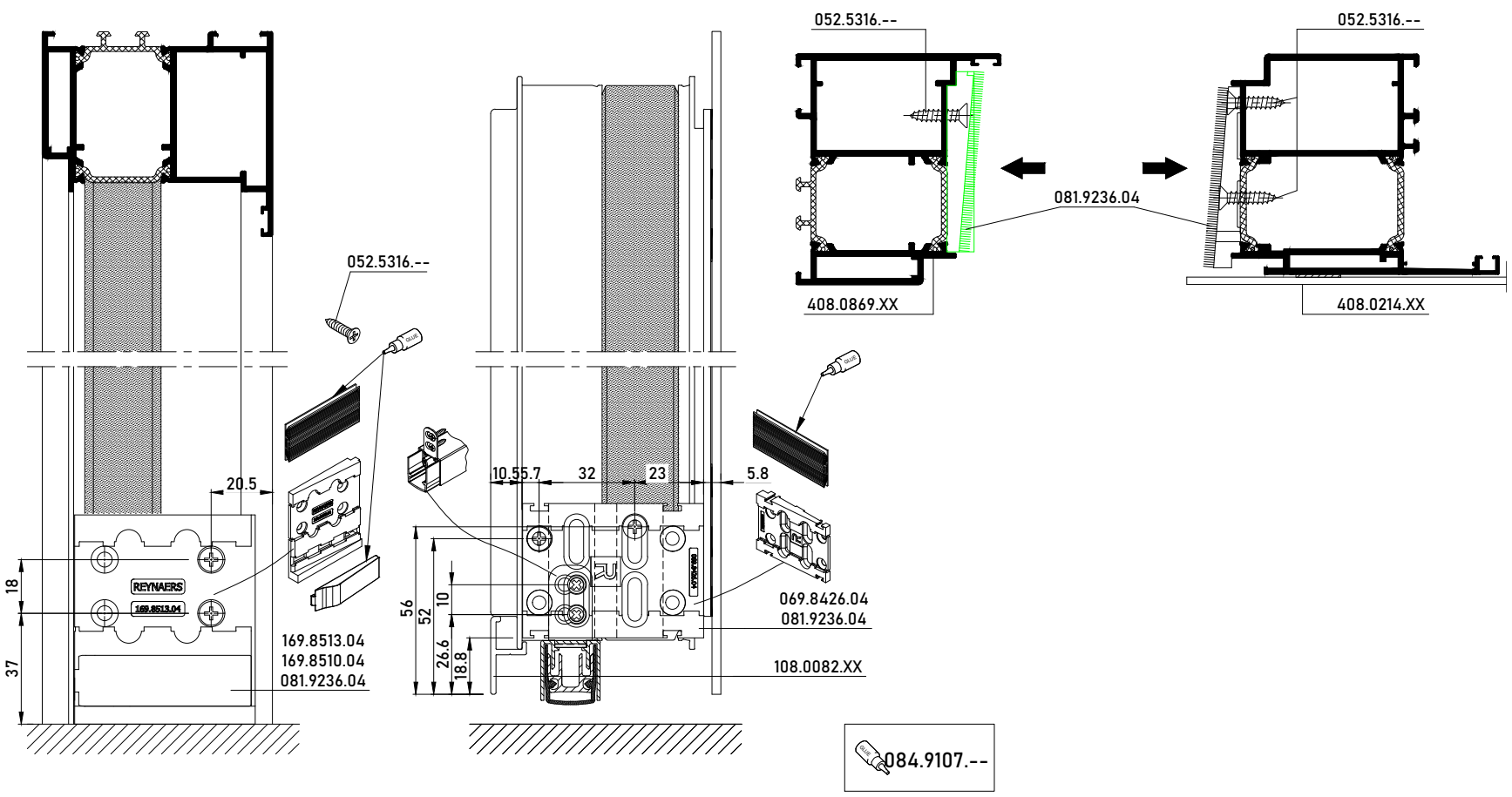

MAGNETUDE PANEL DOOR AUTOMATIC SEALING OUTWARD OPENING

MAGNETUDE PANEL DOOR OUTWARD OPENING WITH DOOR LATCH

MASTERLINE 8-Fu

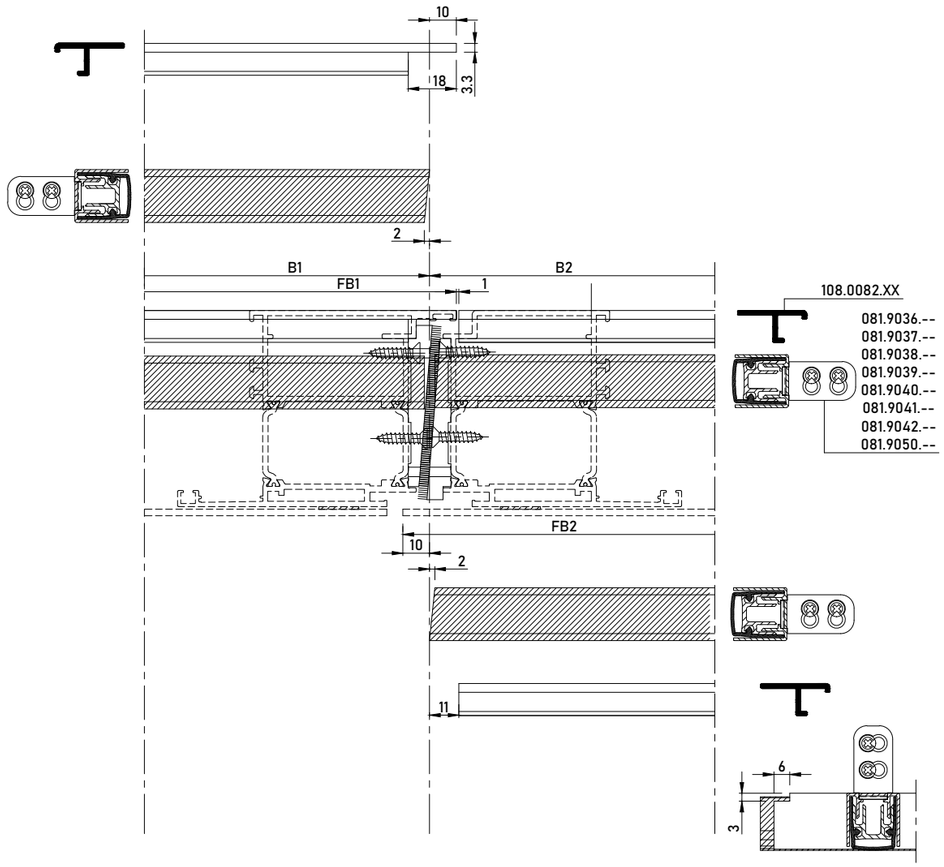

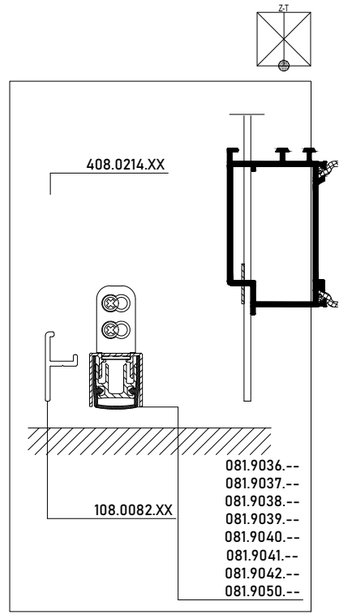

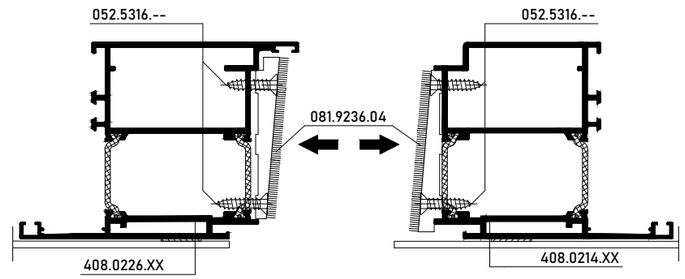

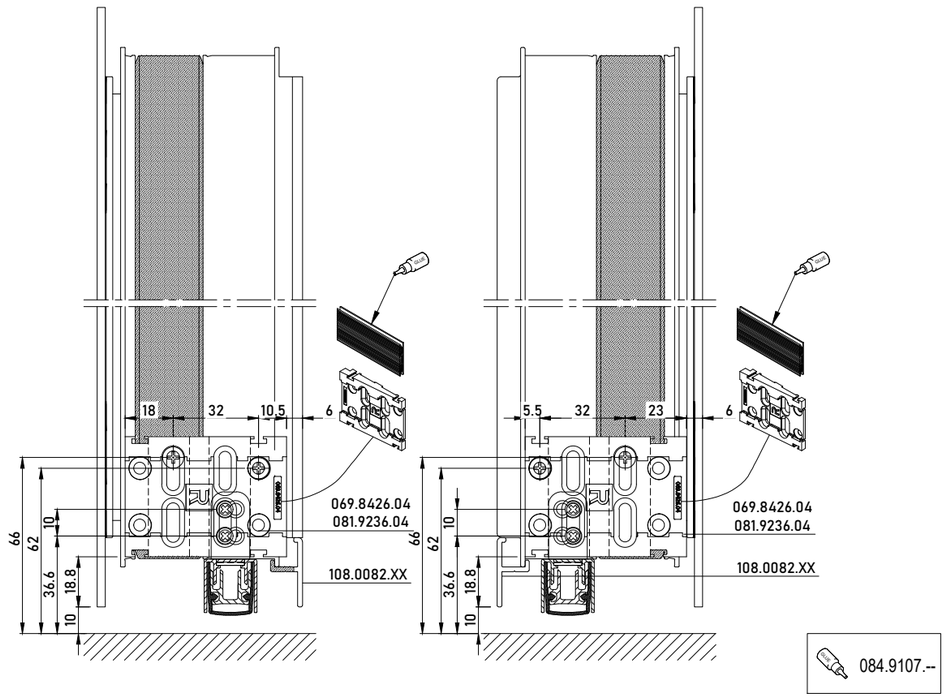

MAGNETUDE PANEL DOOR BRUSH INWARD OPENING

MAGNETUDE PANEL DOOR INWARD OPENING WITH BRUSH

MASTERLINE 8-Fu

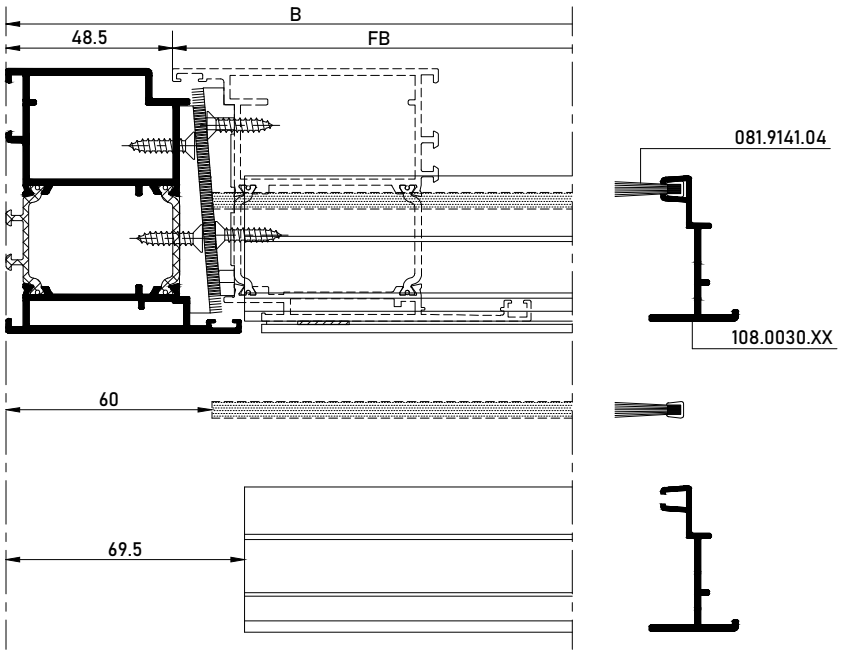

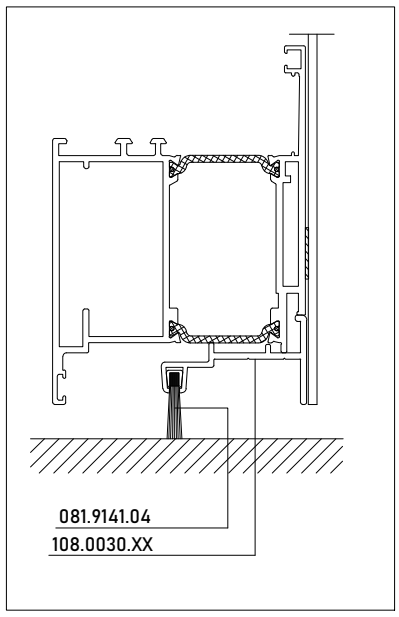

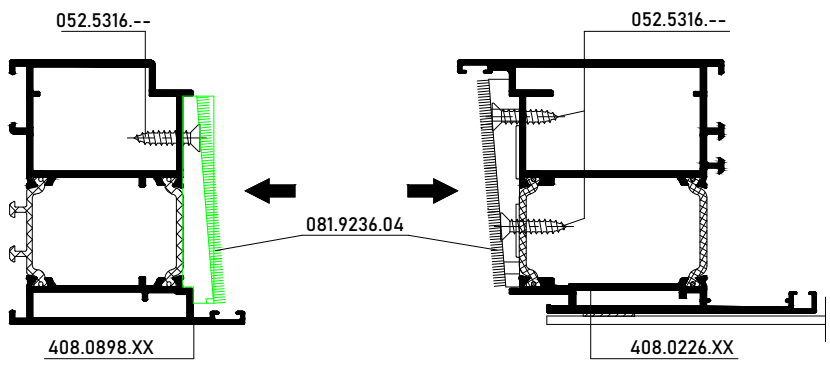

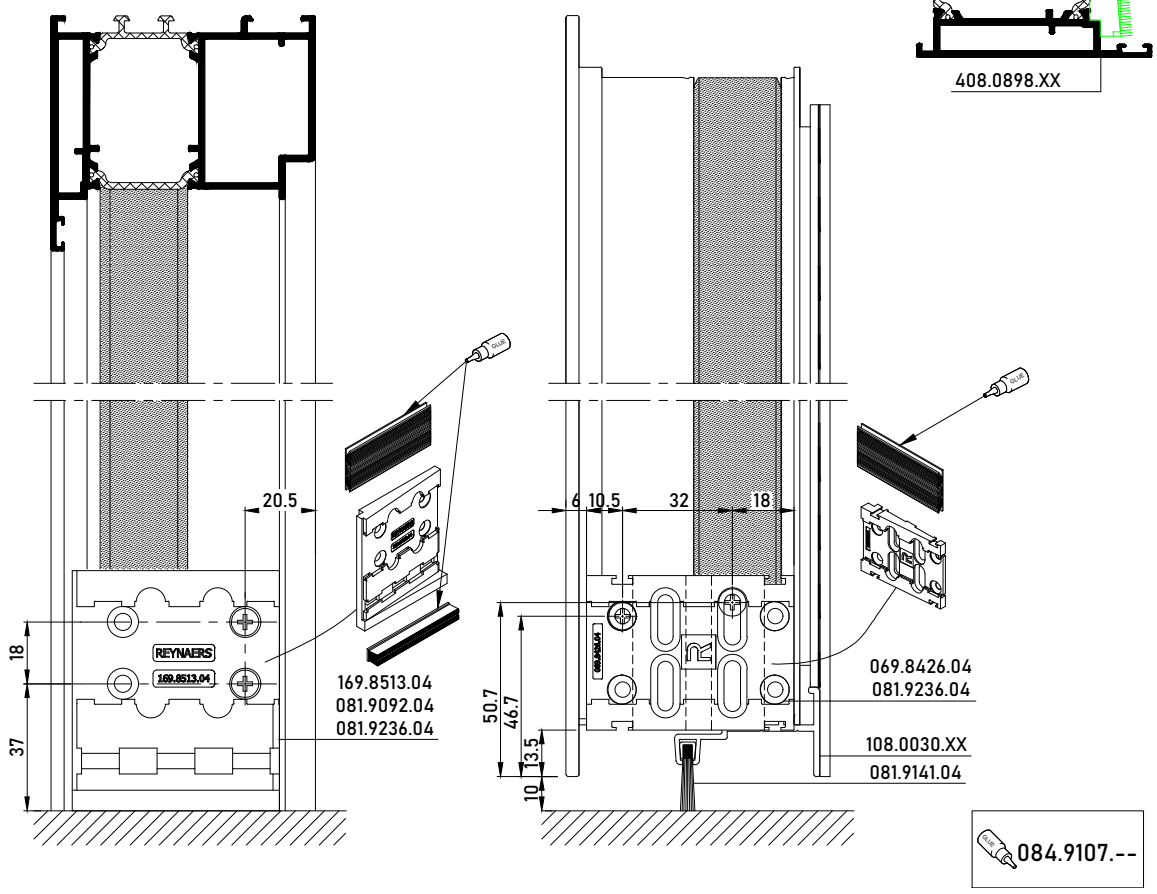

MAGNETUDE PANEL DOOR BRUSH INWARD OPENING

MAGNETUDE PANEL DOOR INWARD OPENING WITH BRUSH

MASTERLINE 8-Fu

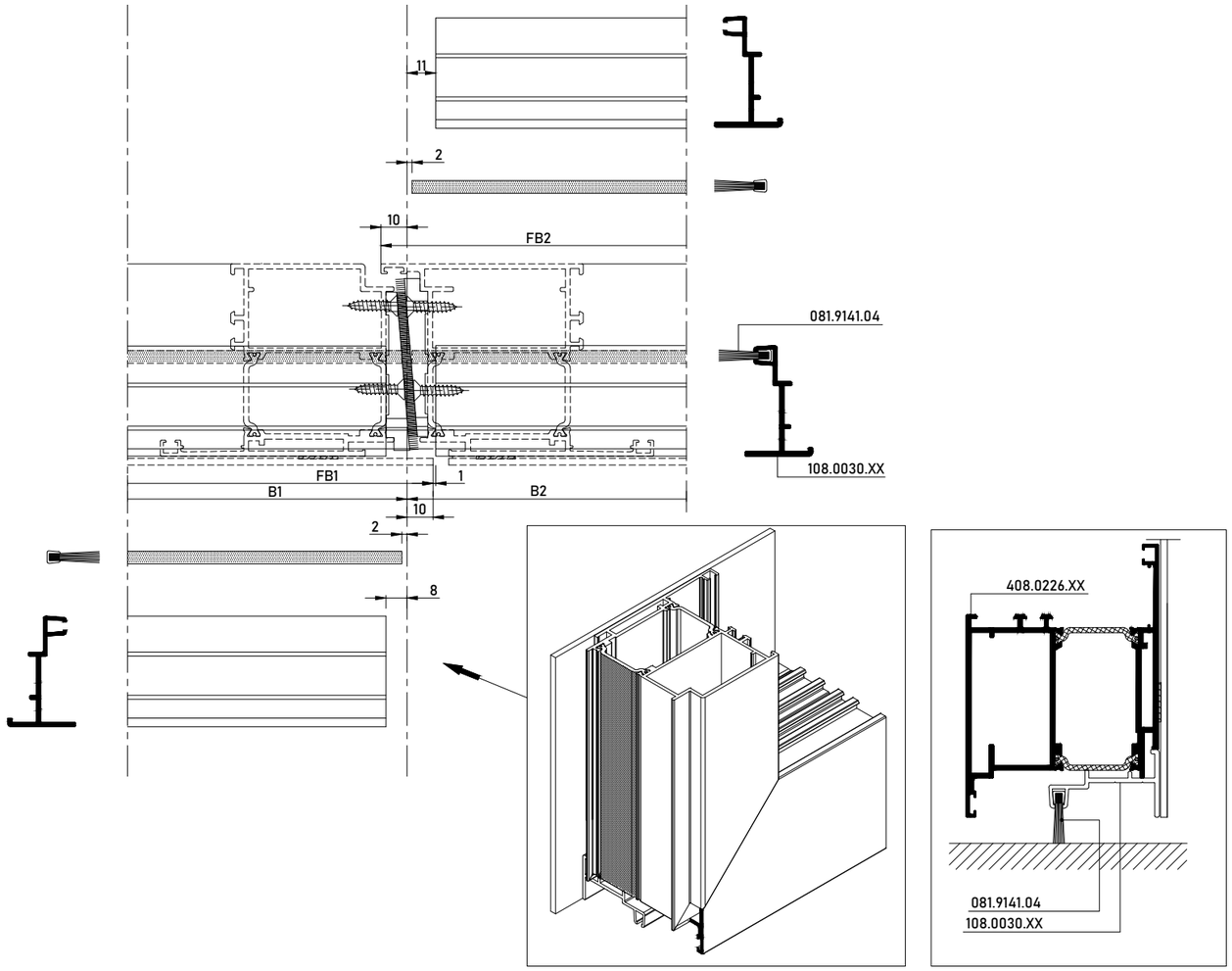

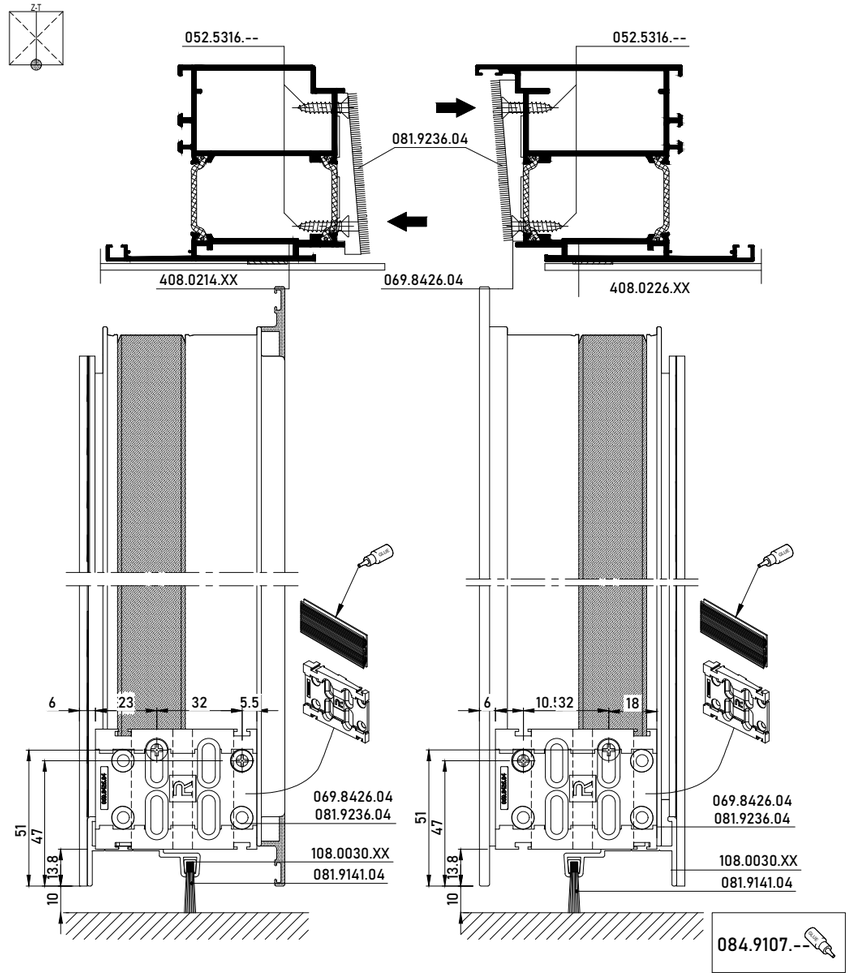

MAGNETUDE PANEL DOOR BRUSH OUTWARD OPENING

MAGNETUDE PANEL DOOR OUTWARD OPENING WITH BRUSH

MASTERLINE 8-Fu

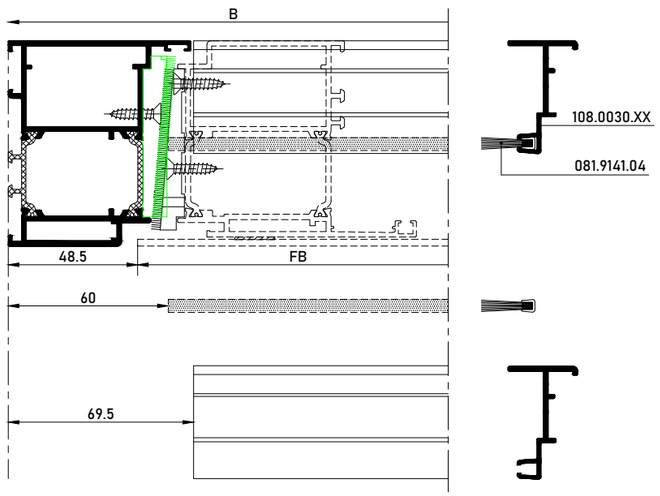

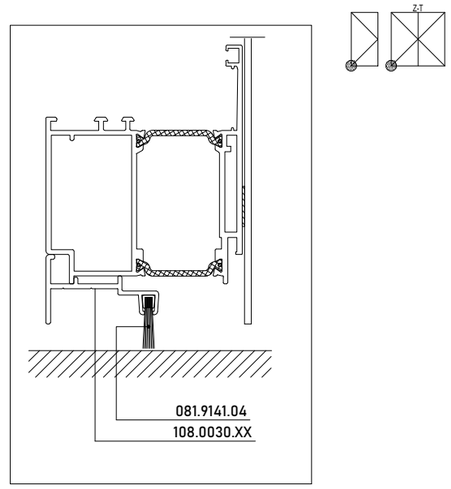

052.5316.--

052.5316.--

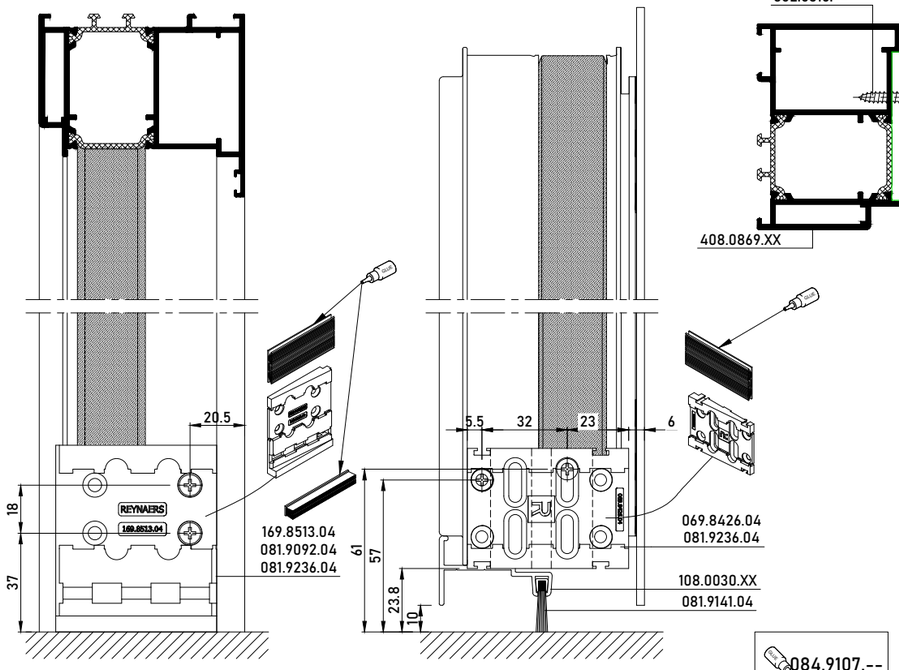

084.9107.--

MAGNETUDE PANEL DOOR BRUSH OUTWARD OPENING

MAGNETUDE PANEL DOOR OUTWARD OPENING WITH BRUSH

MASTERLINE 8-Fu

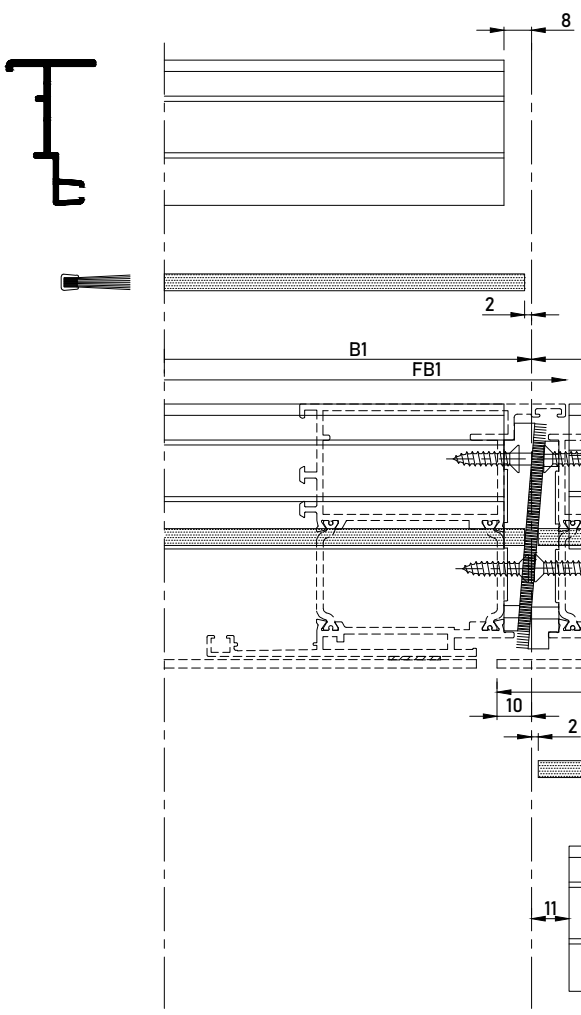

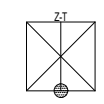

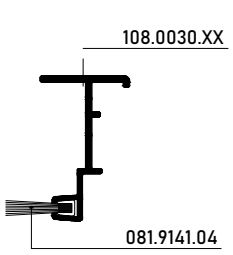

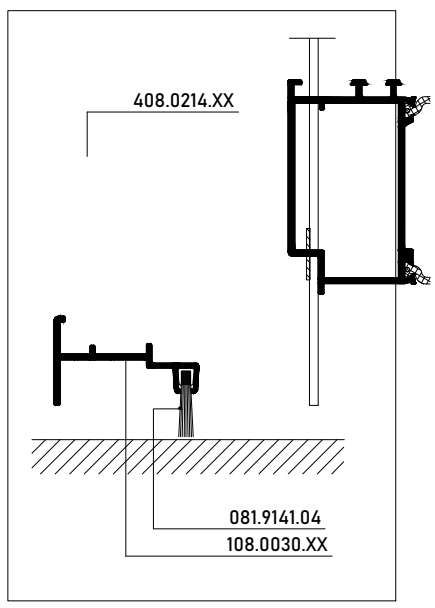

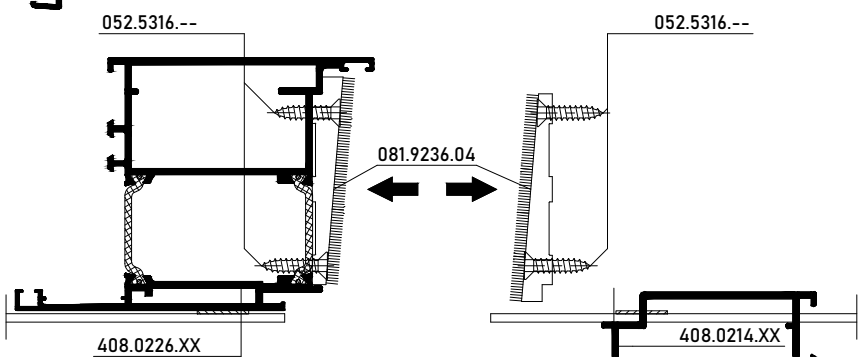

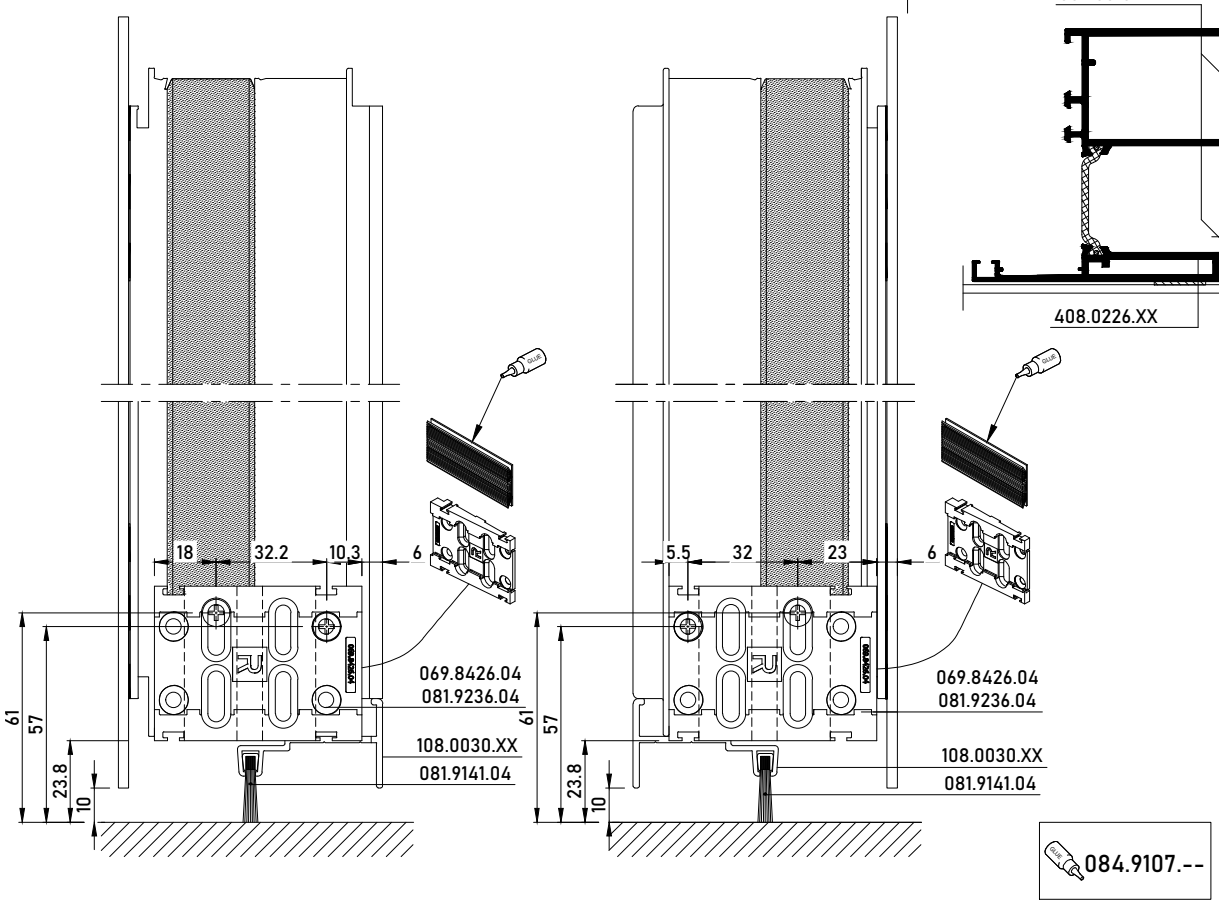

MAGNETUDE PANEL DOOR DOUBLE SIDED AUTOMATIC SEALING OUTWARD OPENING

MAGNETUDE PANEL DOOR DOUBLE SIDED OUTWARD OPENING WITH AUTOMATIC DRAUGHT EXCLUDER

MASTERLINE 8-Fu

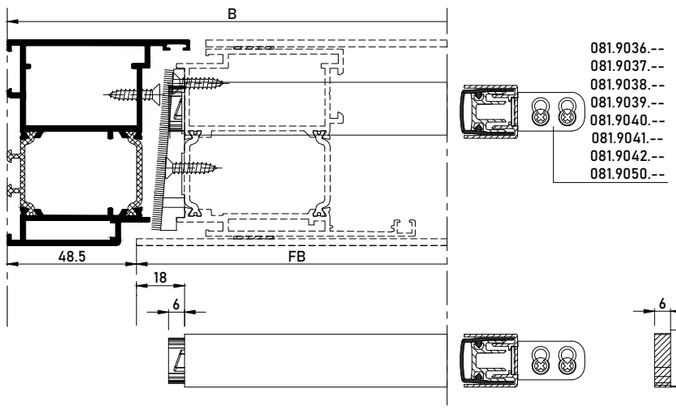

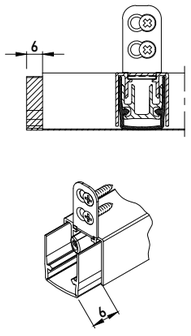

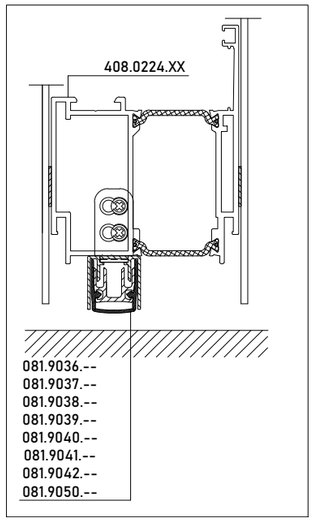

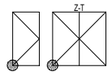

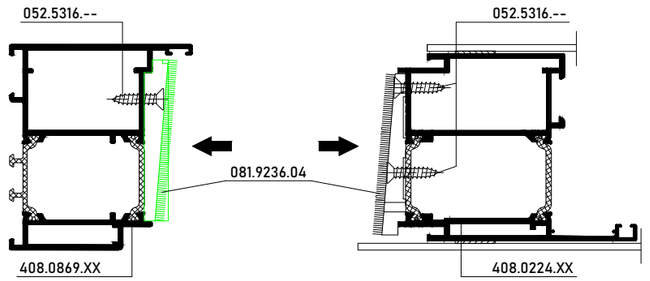

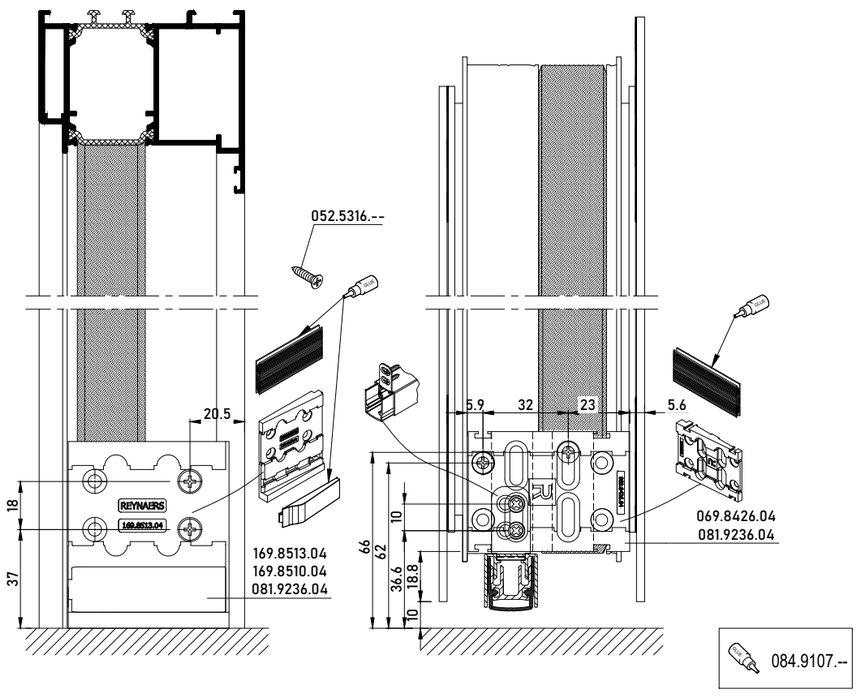

MAGNETUDE PANEL DOOR DOUBLE SIDED AUTOMATIC SEALING OUTWARD OPENING

MAGNETUDE PANEL DOOR DOUBLE SIDED OUTWARD OPENING WITH AUTOMATIC DRAUGHT EXCLUDER

MASTERLINE 8-Fu

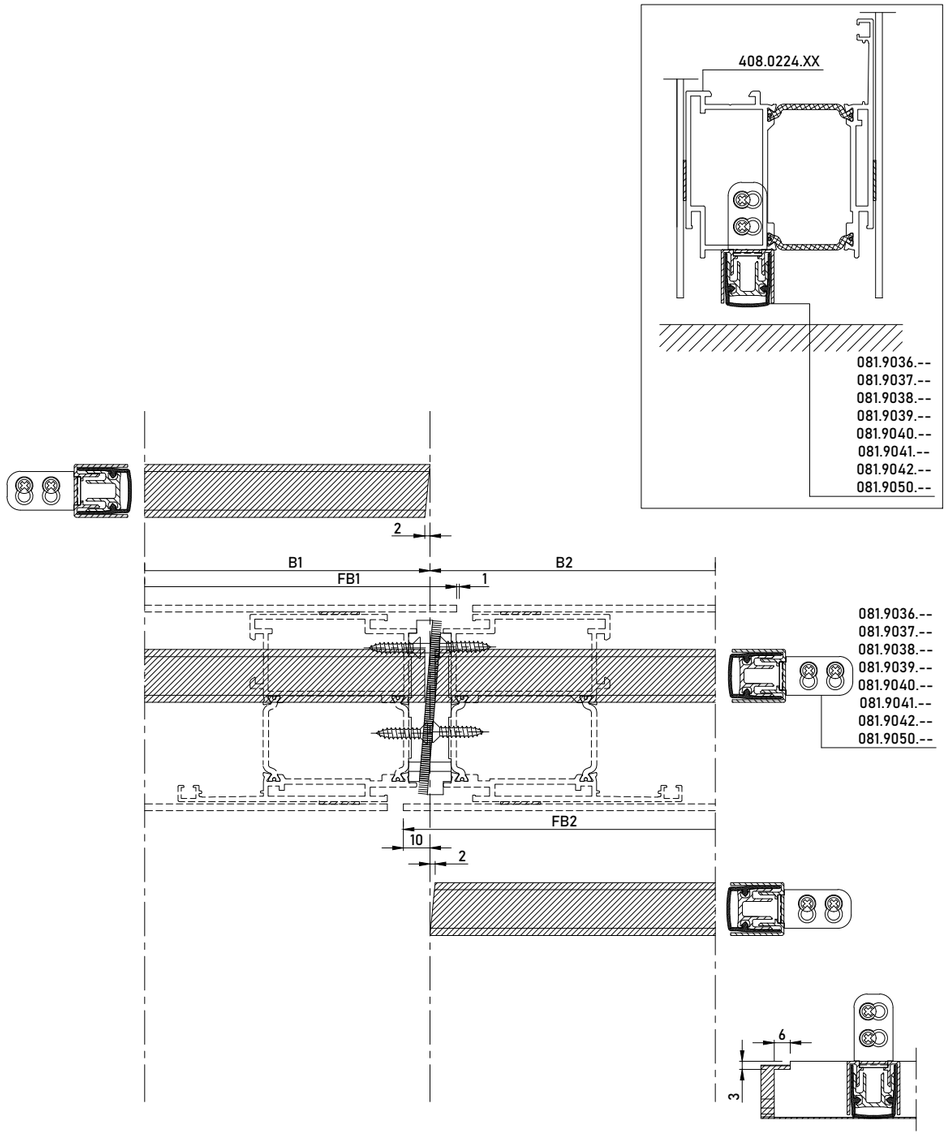

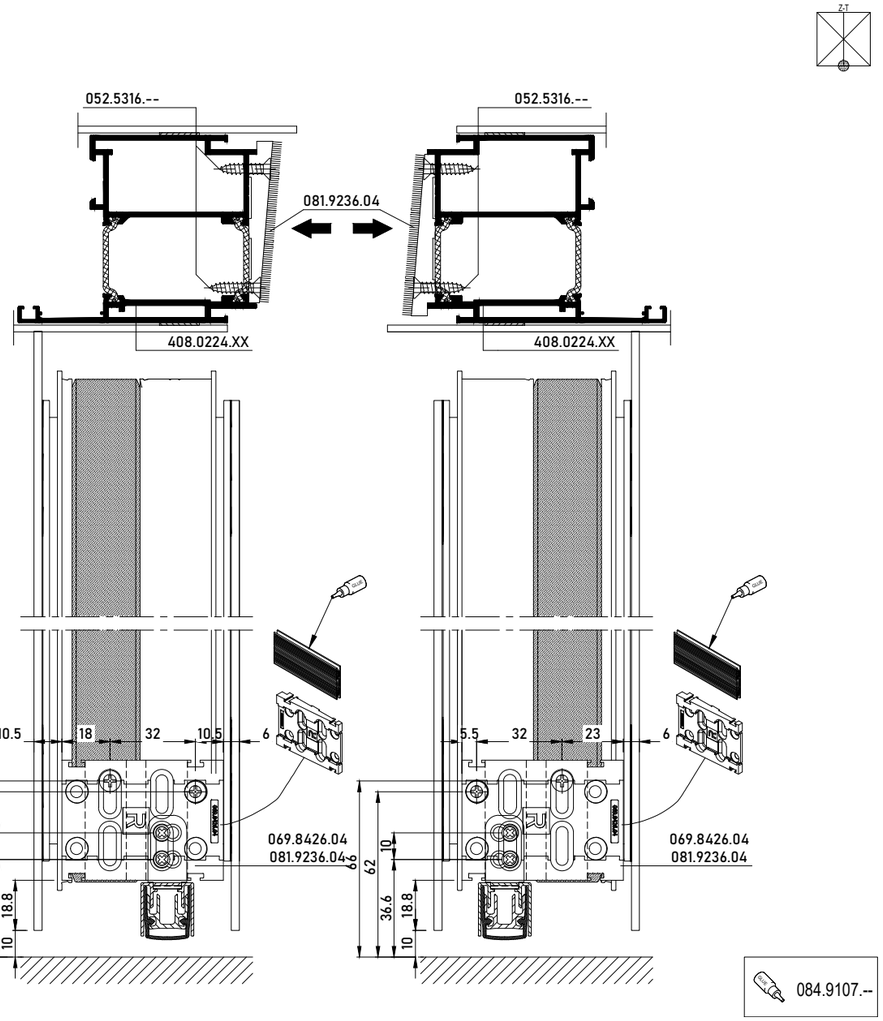

MAGNETUDE PANEL DOOR DOUBLE SIDED BRUSH INWARD OPENING

MAGNETUDE PANEL DOOR DOUBLE SIDED INWARD OPENING WITH DOUBLE WEATHER STRIP

MASTERLINE 8-Fu

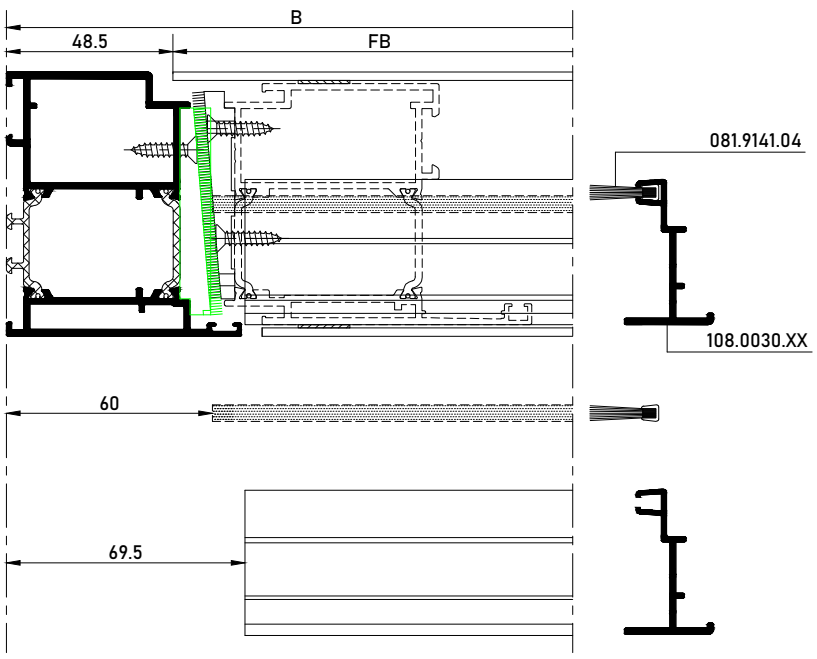

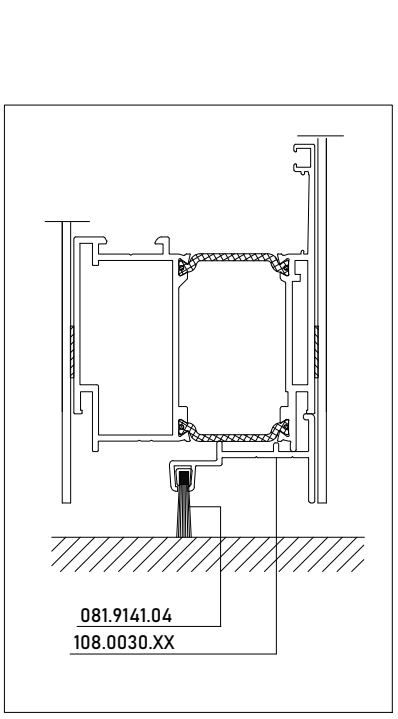

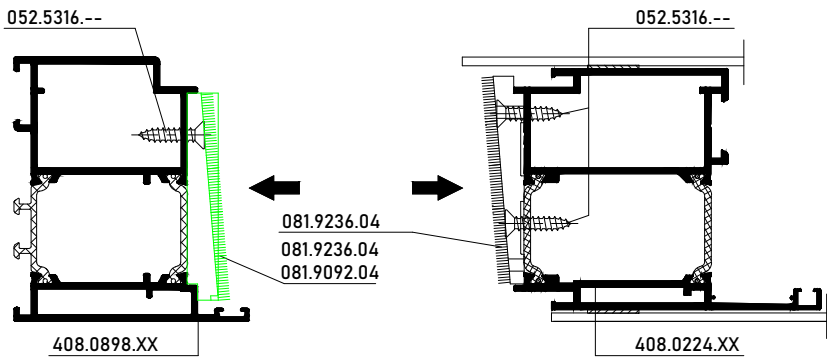

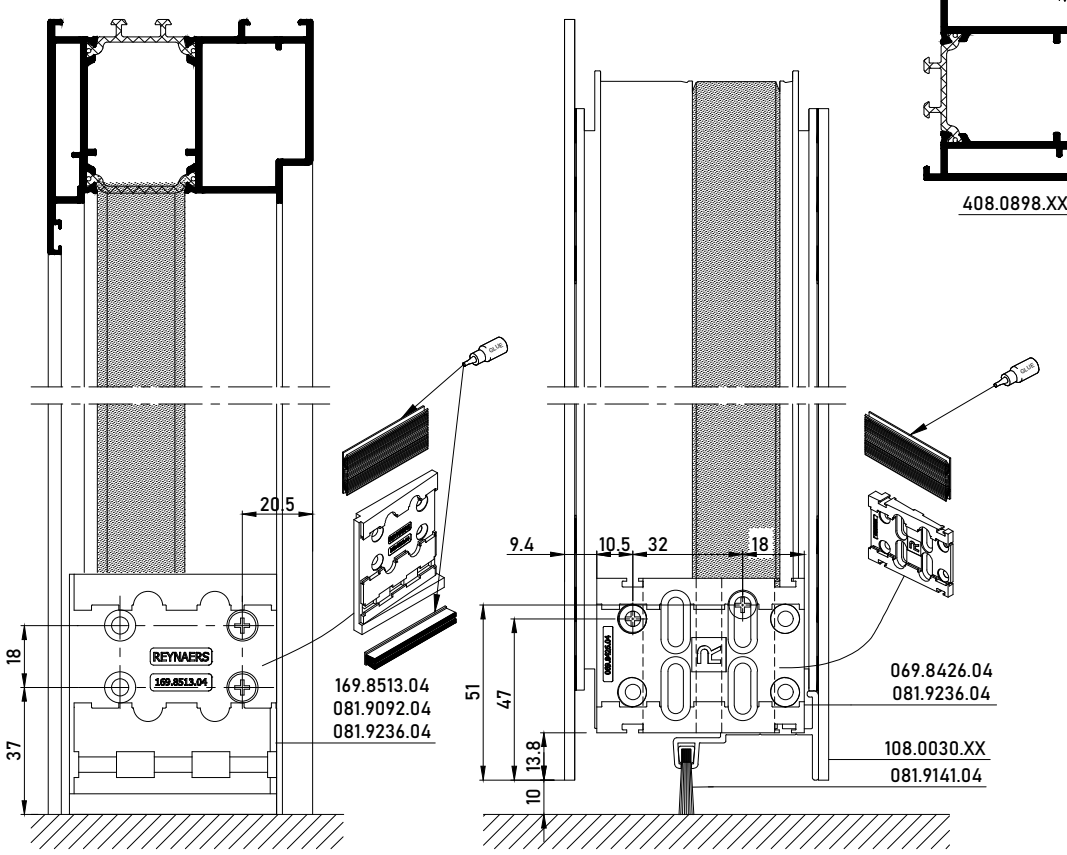

084.9107.--

MAGNETUDE PANEL DOOR DOUBLE SIDED BRUSH INWARD OPENING

MAGNETUDE PANEL DOOR DOUBLE SIDED INWARD OPENING WITH DOUBLE WEATHER STRIP

MASTERLINE 8-Fu

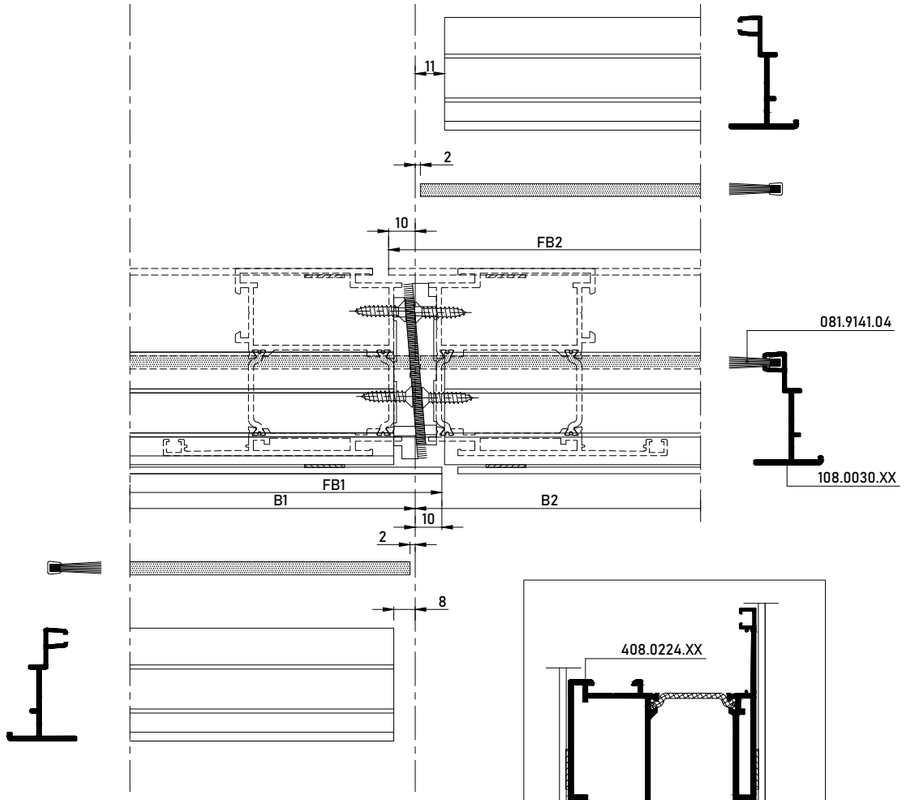

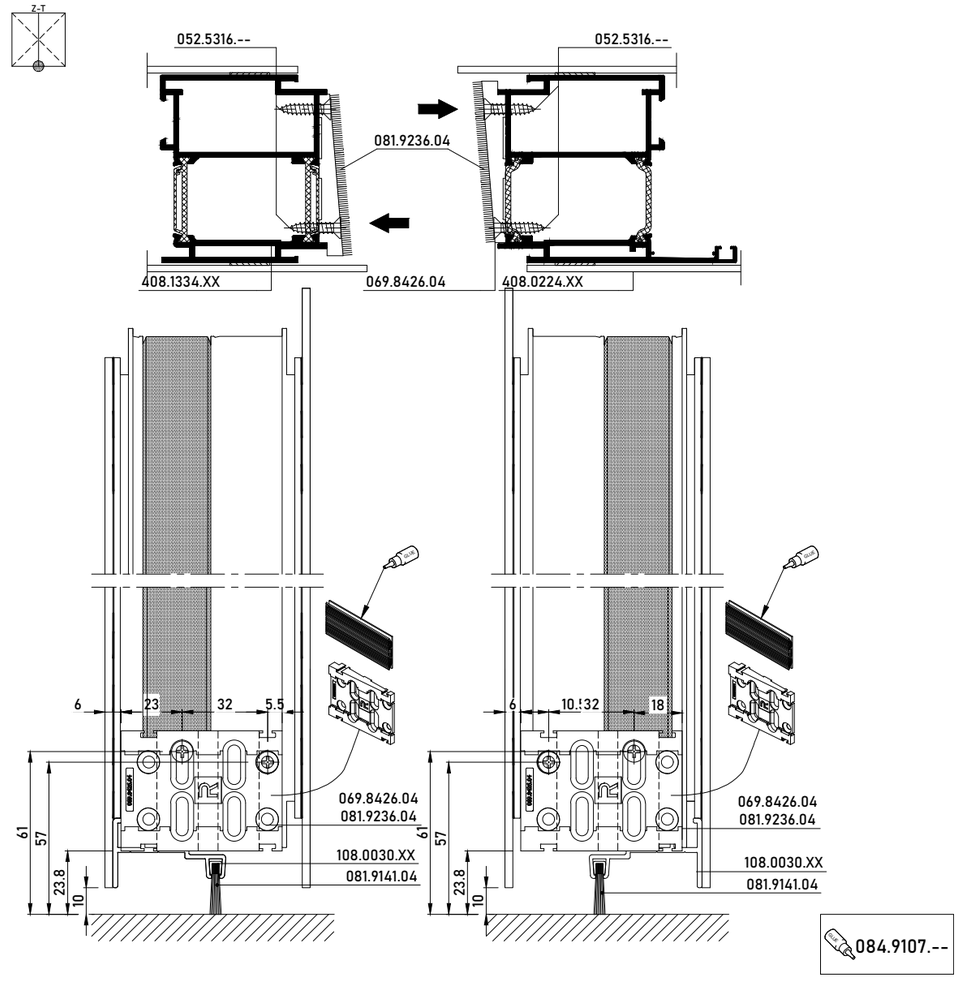

MAGNETUDE PANEL DOOR DOUBLE SIDED BRUSH INWARD OPENING

MAGNETUDE PANEL DOOR DOUBLE SIDED INWARD OPENING WITH DOUBLE WEATHER STRIP

MASTERLINE 8-Fu

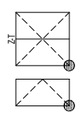

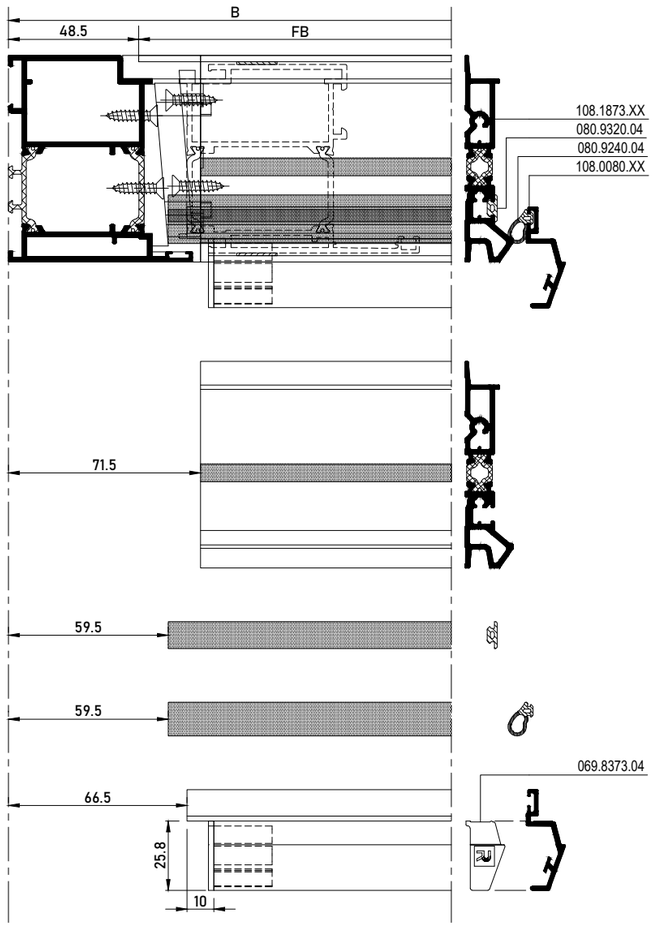

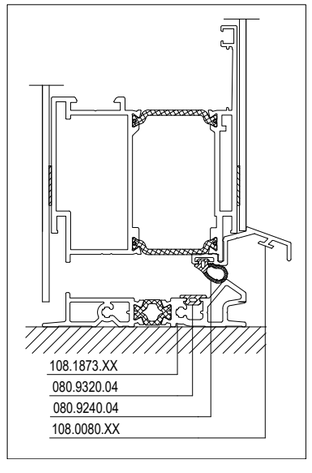



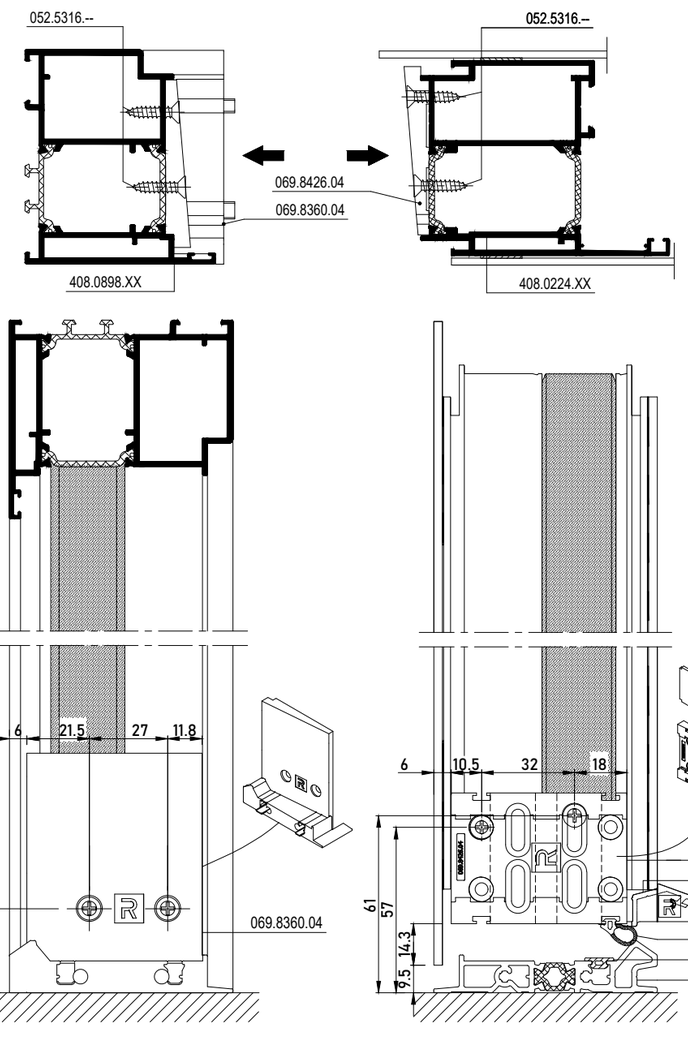

MAGNETUDE PANEL DOOR DOUBLE SIDED BRUSH INWARD OPENING

MAGNETUDE PANEL DOOR DOUBLE SIDED INWARD OPENING WITH DOUBLE WEATHER STRIP

MASTERLINE 8-Fu

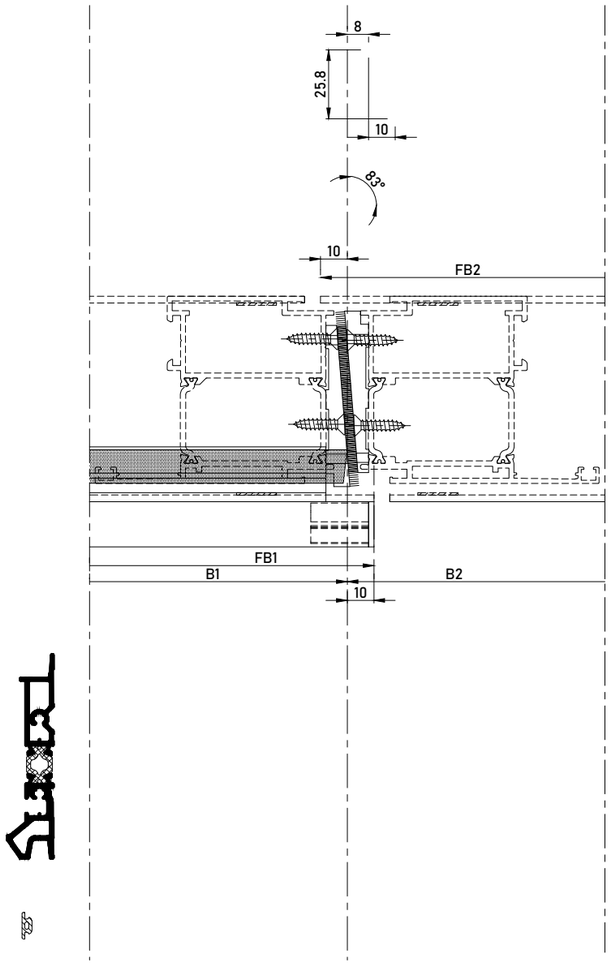

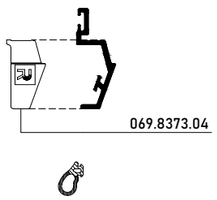

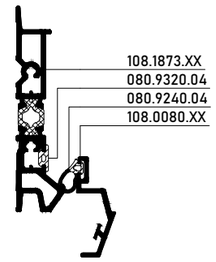

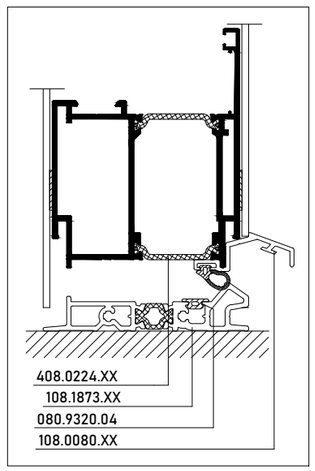

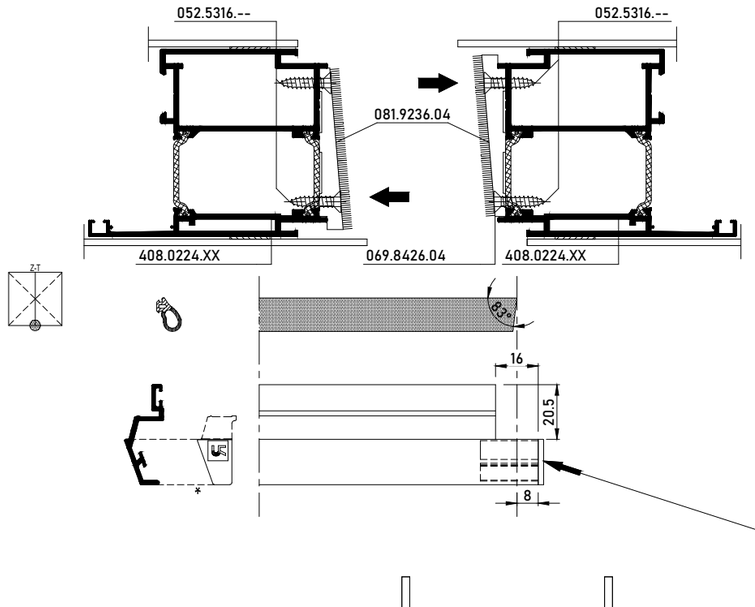

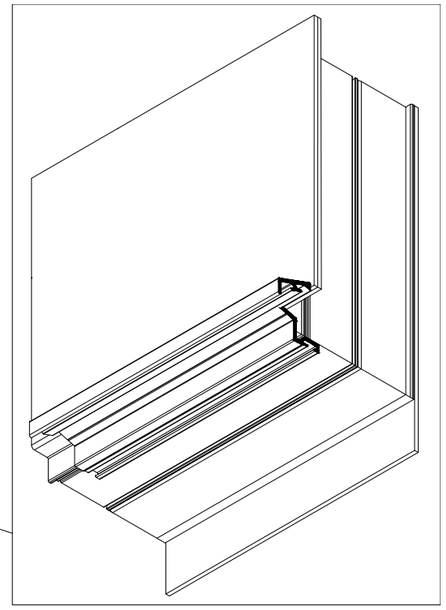

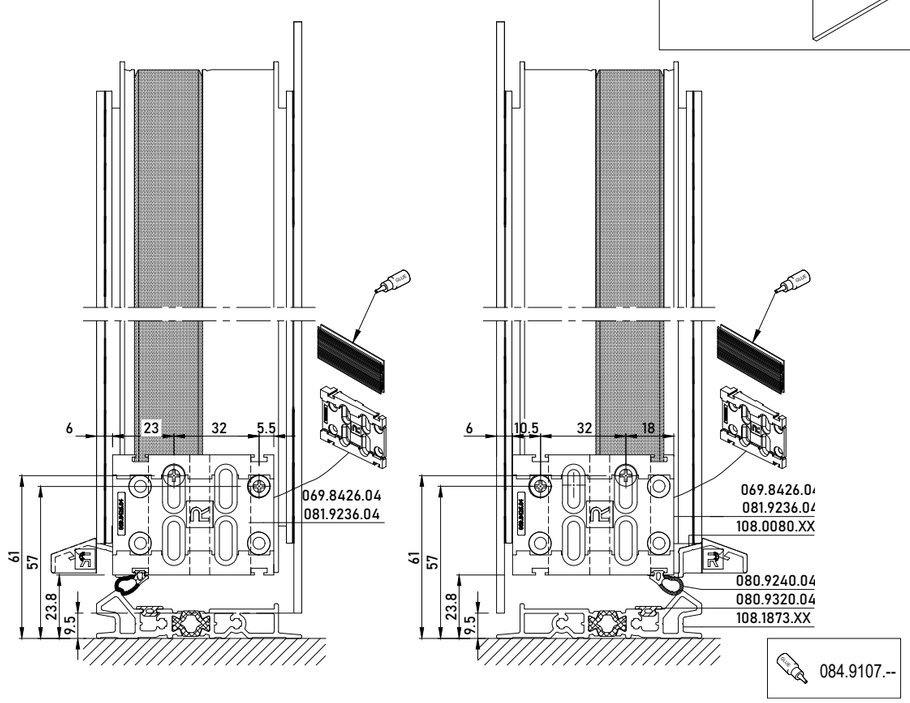

MAGNETUDE PANEL DOOR DOUBLE SIDED BRUSH INWARD OPENING

MAGNETUDE PANEL DOOR DOUBLE SIDED INWARD OPENING WITH AUTOMATIC DRAUGHT EXCLUDER

MASTERLINE 8-Fu

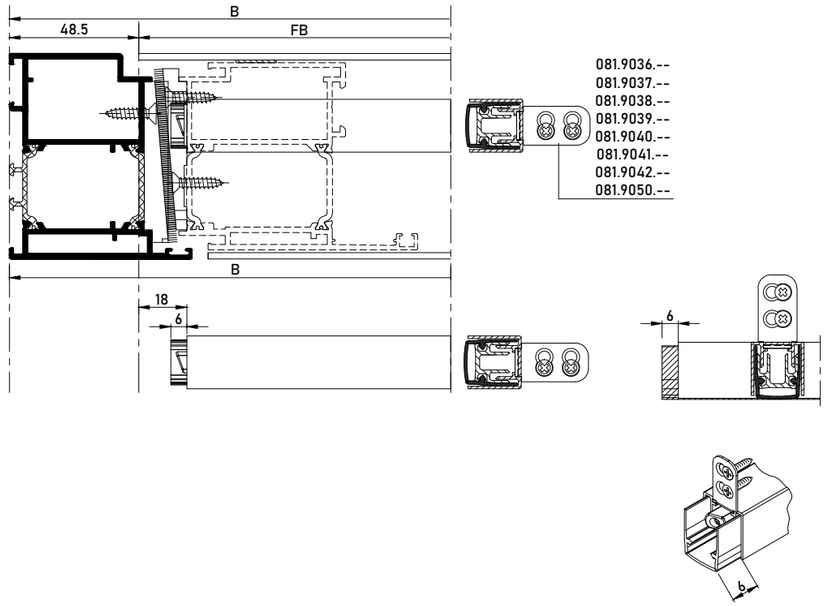

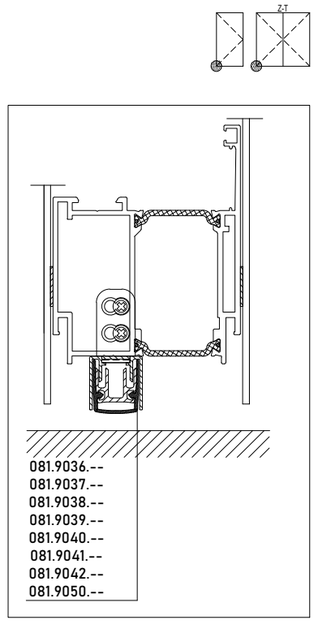

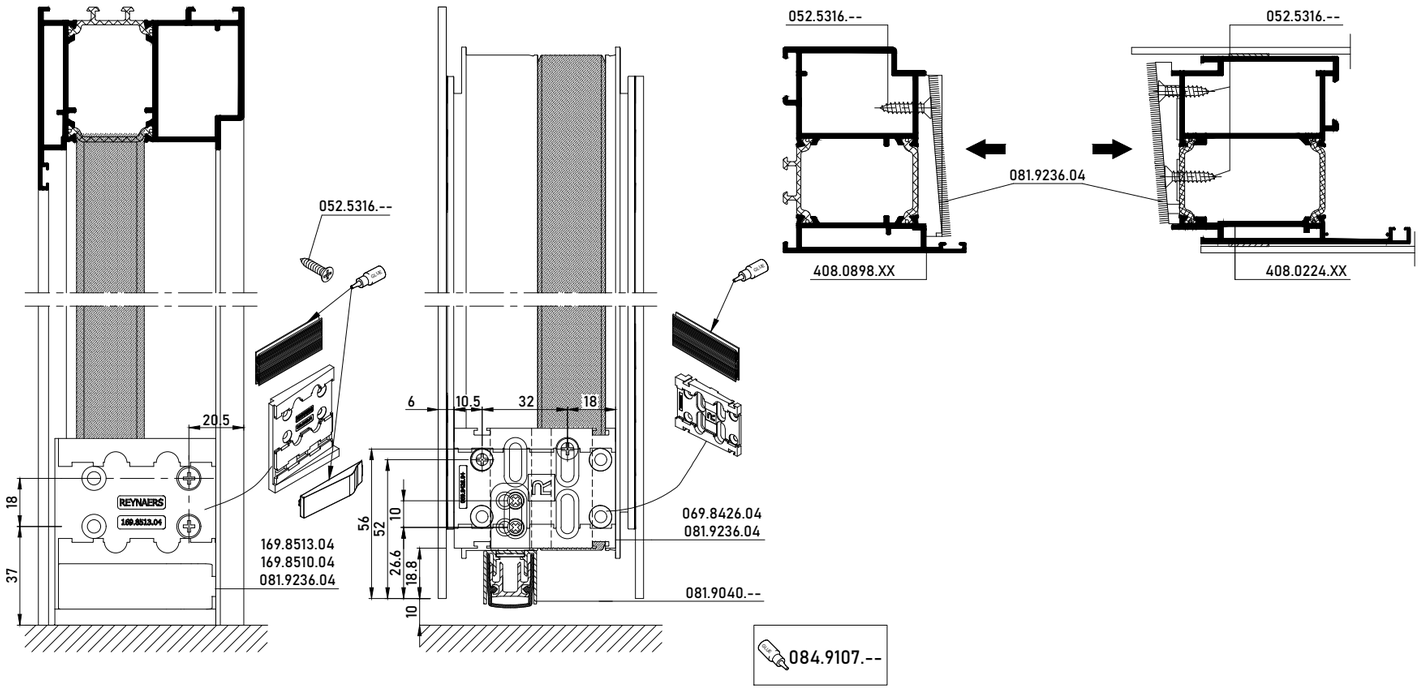

MAGNETUDE PANEL DOOR DOUBLE SIDED BRUSH INWARD OPENING

MAGNETUDE PANEL DOOR DOUBLE SIDED INWARD OPENING WITH AUTOMATIC DRAUGHT EXCLUDER

MASTERLINE 8-Fu

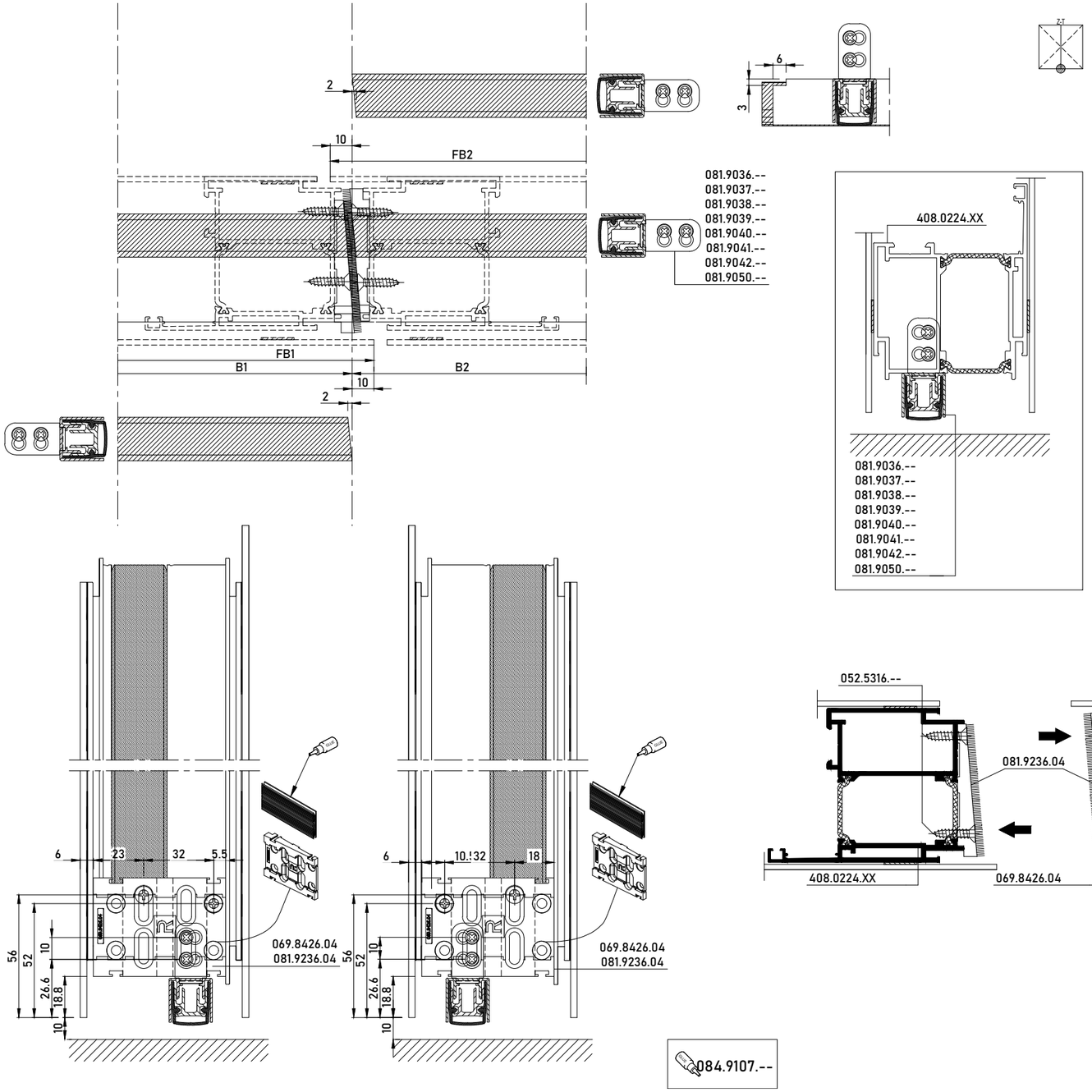

MAGNETUDE PANEL DOOR DOUBLE SIDED BRUSH OUTWARD OPENING

MAGNETUDE PANEL DOOR DOUBLE SIDED OUTWARD OPENING WITH BRUSH

MASTERLINE 8-Fu

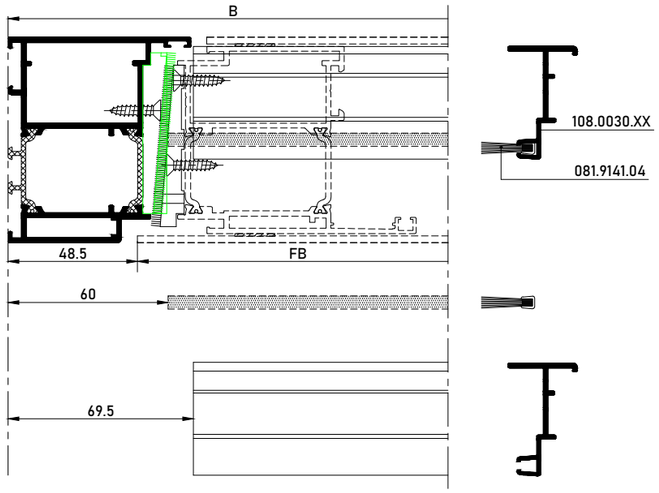

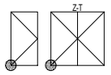

052.5316.--

052.5316.--

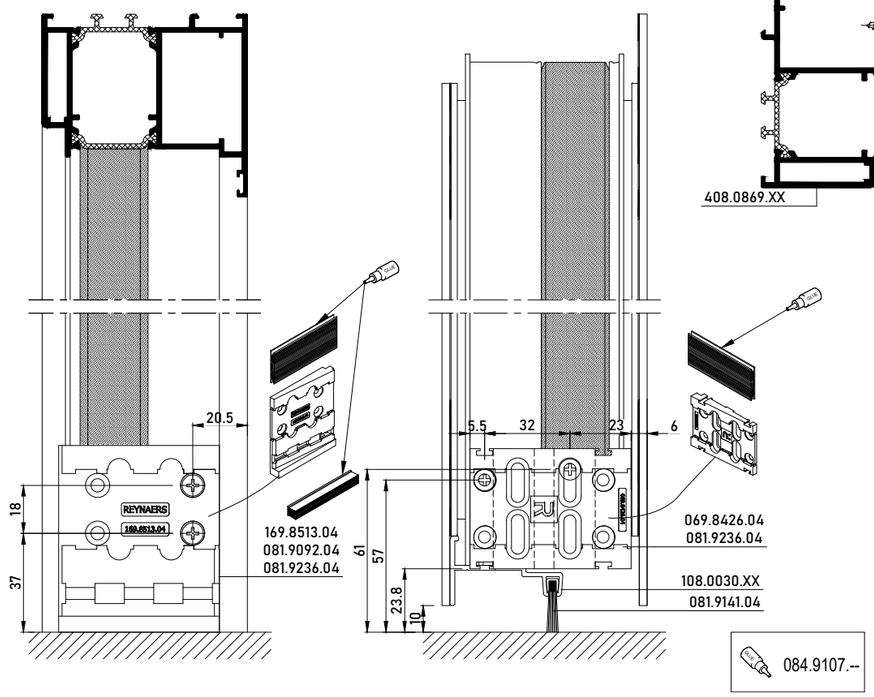

MAGNETUDE PANEL DOOR DOUBLE SIDED BRUSH OUTWARD OPENING

MAGNETUDE PANEL DOOR DOUBLE SIDED OUTWARD OPENING WITH BRUSH

MASTERLINE 8-Fu

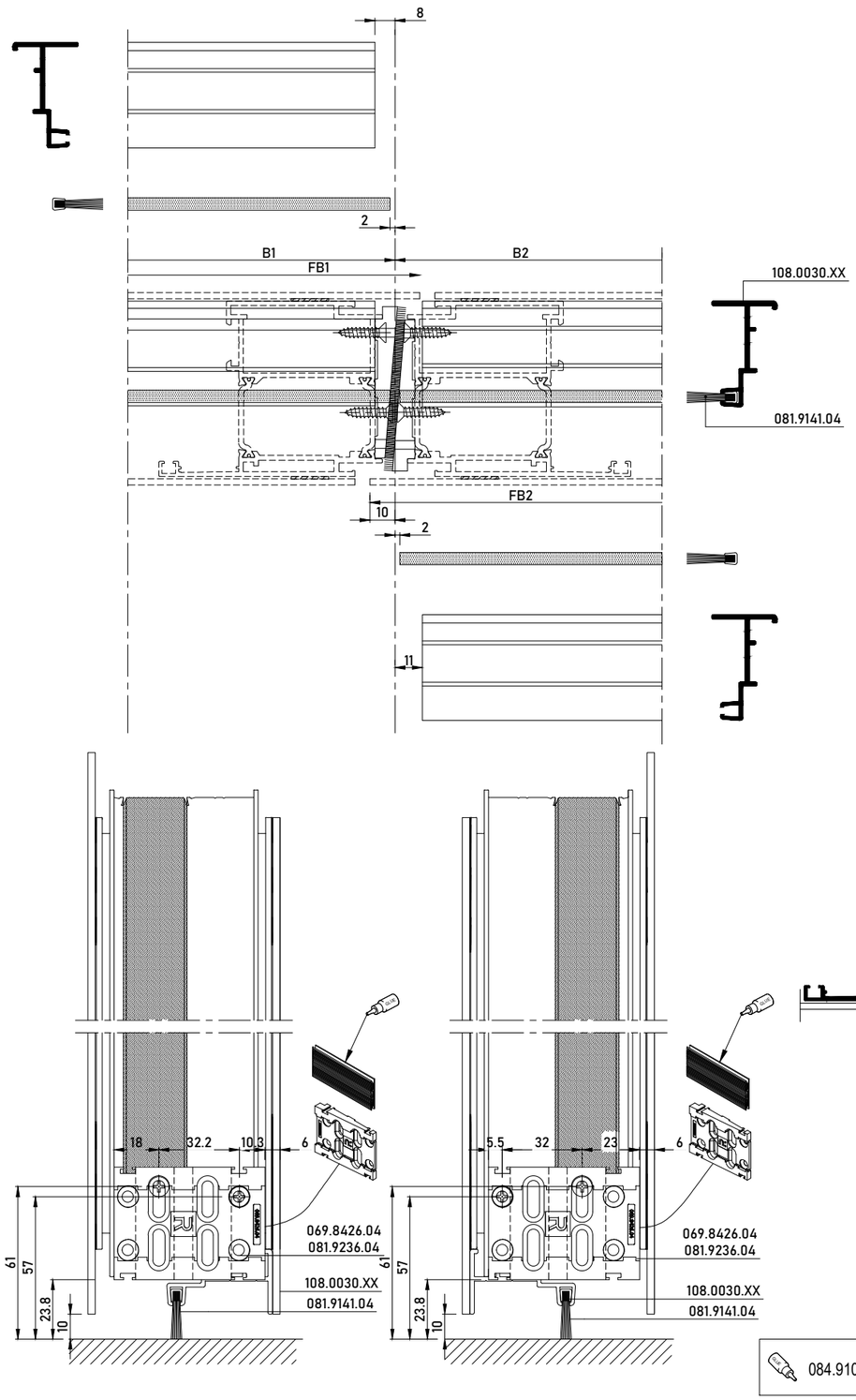

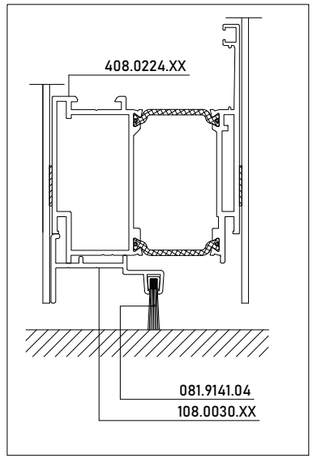

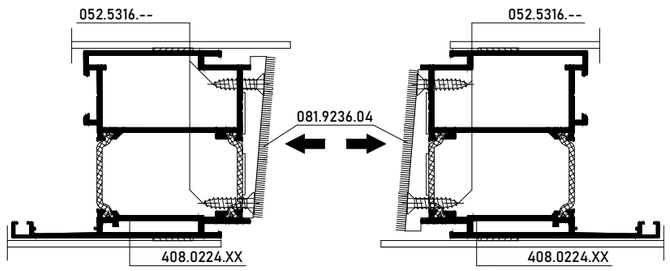

MAGNETUDE PANEL DOOR DOUBLE SIDED WEATHER STRIP INWARD OPENING

MAGNETUDE PANEL DOOR DOUBLE SIDED OUTWARD OPENING WITH DOUBLE WEATHER STRIP

MASTERLINE 8-Fu

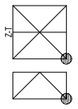

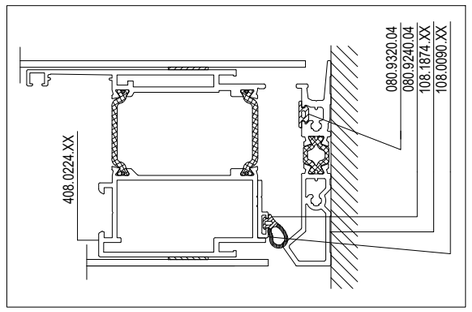

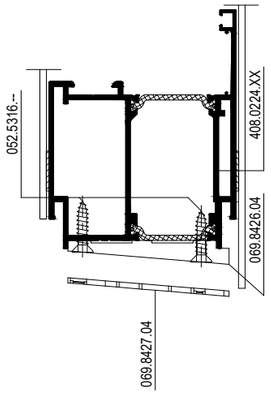

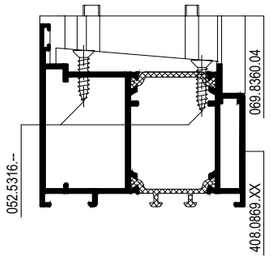



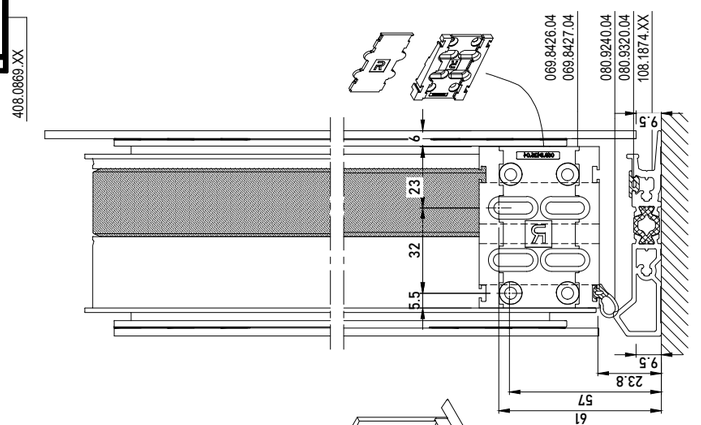

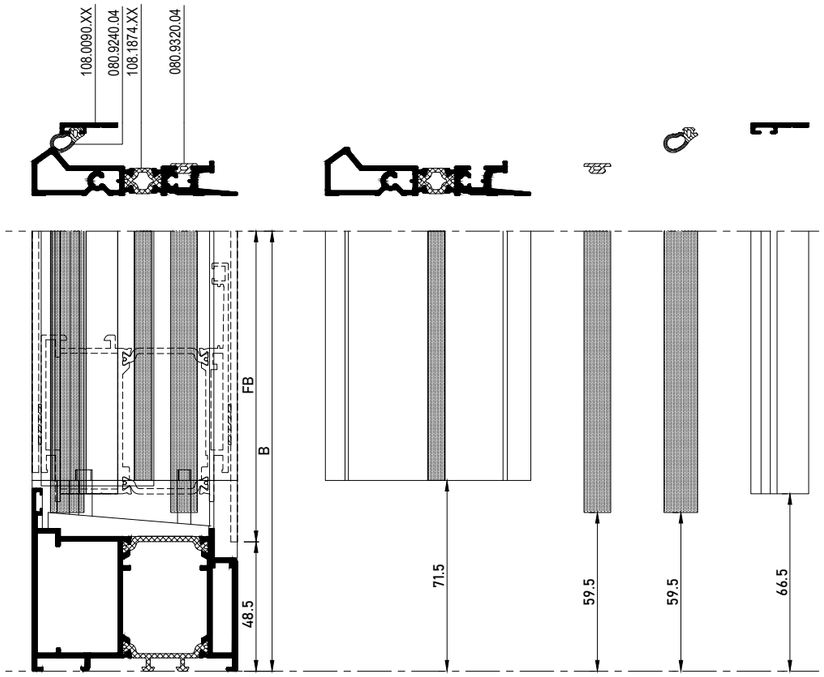

MAGNETUDE PANEL DOOR DOUBLE SIDED WEATHER STRIP INWARD OPENING

MAGNETUDE PANEL DOOR DOUBLE SIDED OUTWARD OPENING WITH DOUBLE WEATHER STRIP

MASTERLINE 8-Fu

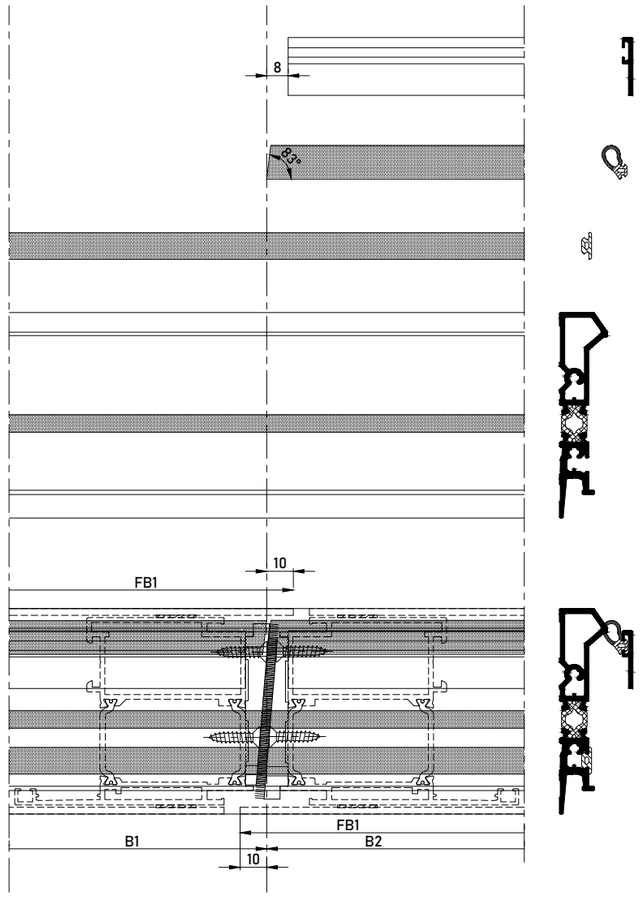

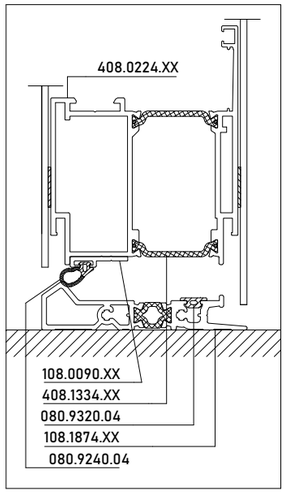

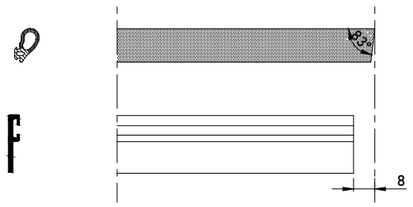

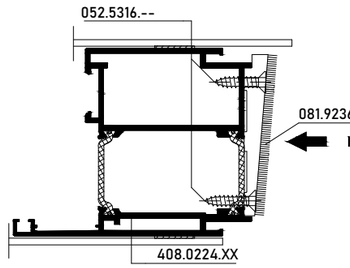

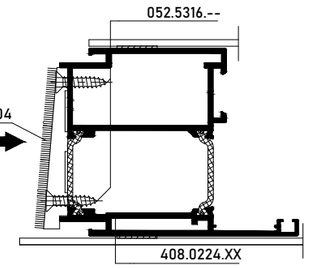

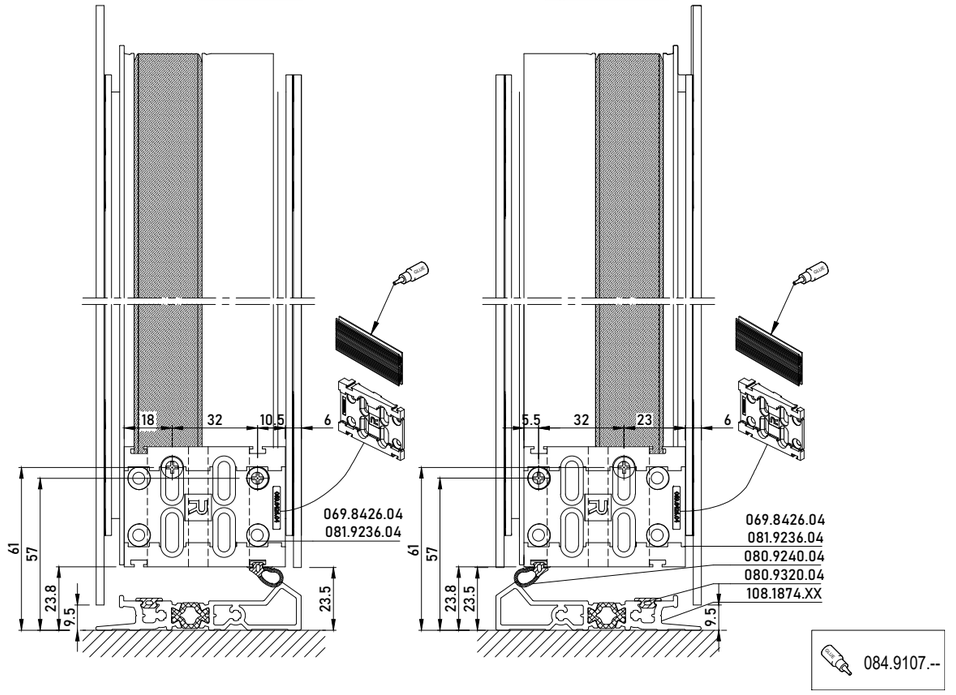

MAGNETUDE PANEL DOOR WEATHER STRIP INWARD OPENING

MAGNETUDE PANEL DOOR INWARD OPENING WITH DOUBLE WEATHER STRIP

MASTERLINE 8-Fu

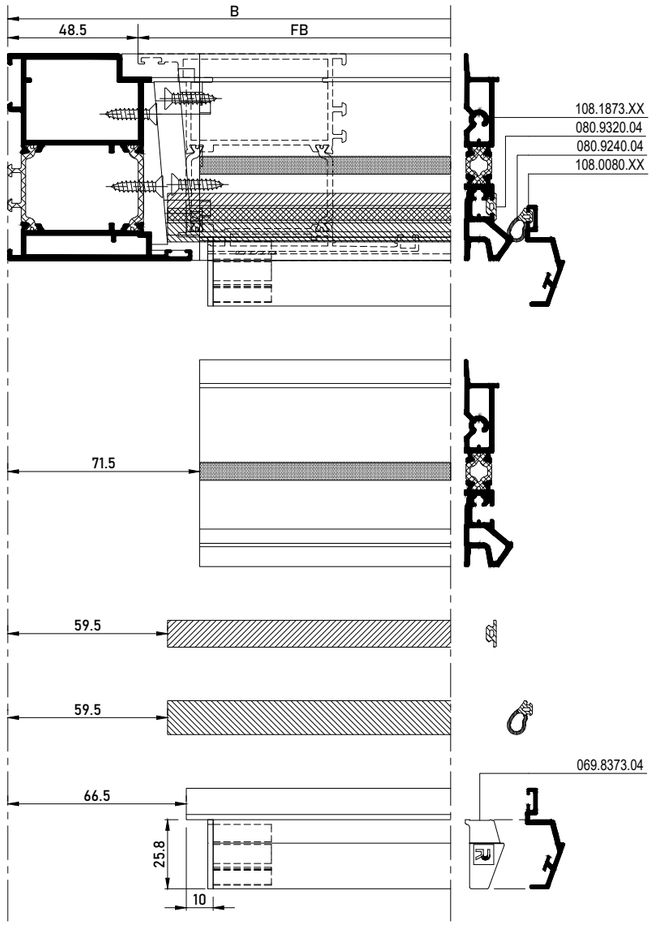

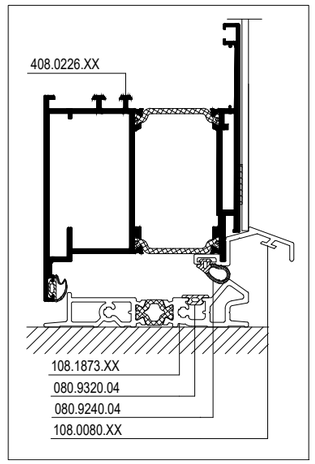

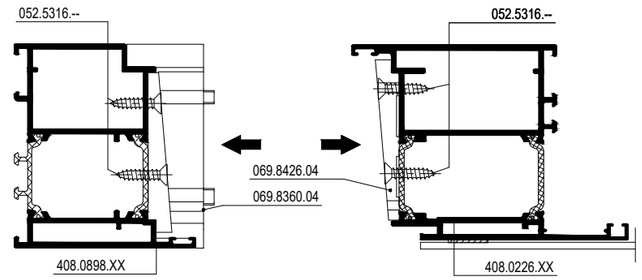

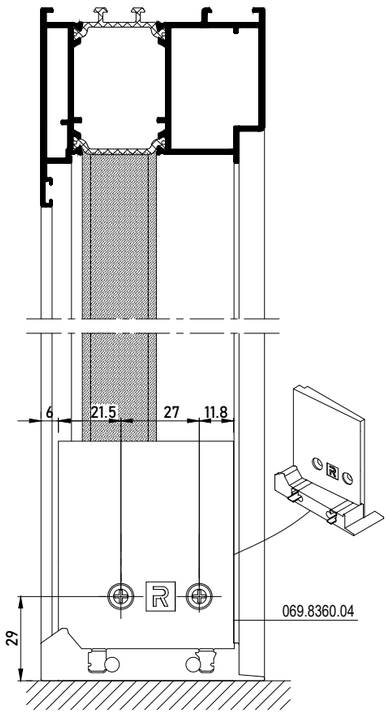

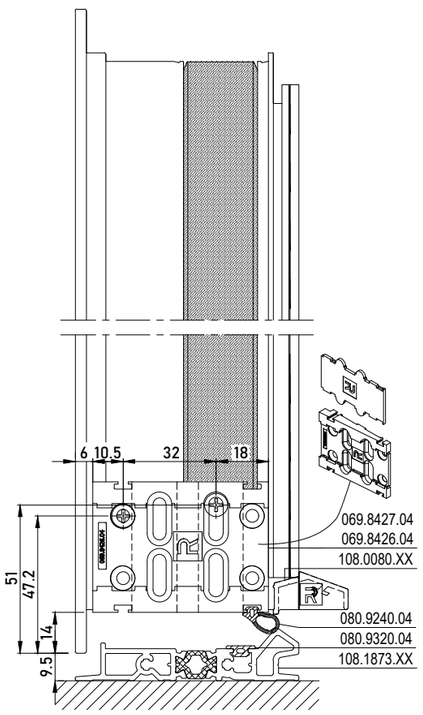

MAGNETUDE PANEL DOOR WEATHER STRIP INWARD OPENING

MAGNETUDE PANEL DOOR INWARD OPENING WITH DOUBLE WEATHER STRIP

MASTERLINE 8-Fu

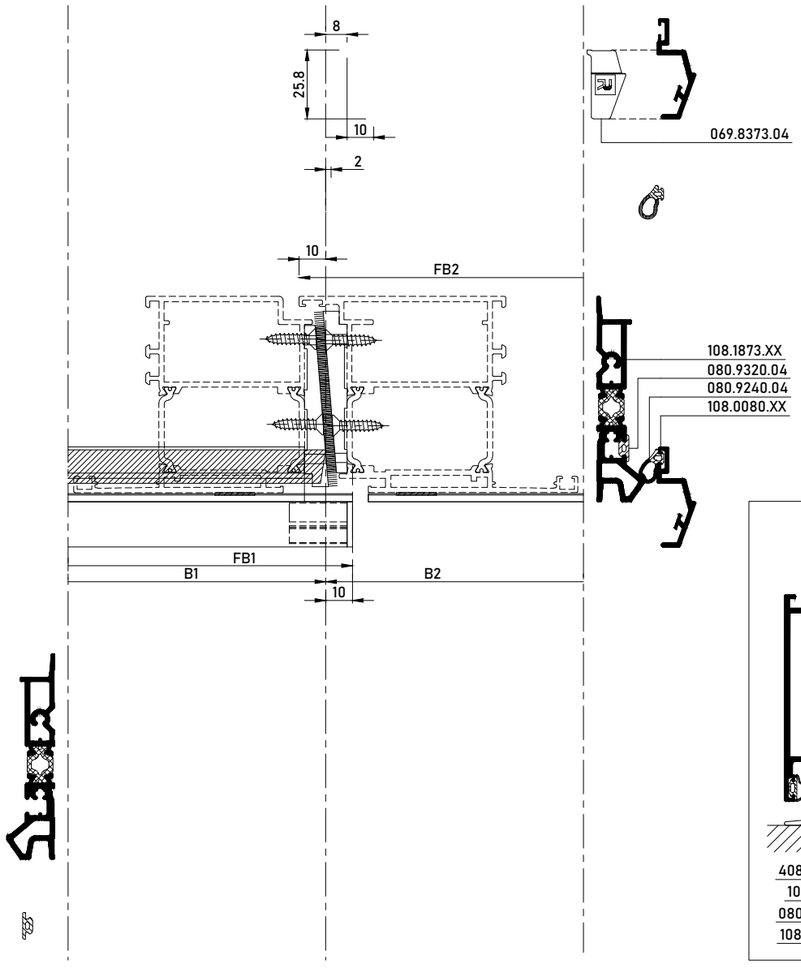

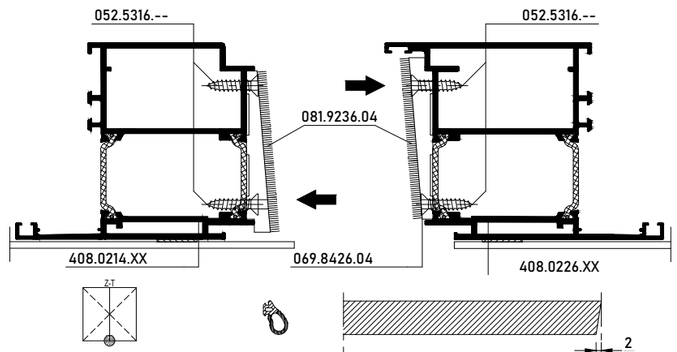

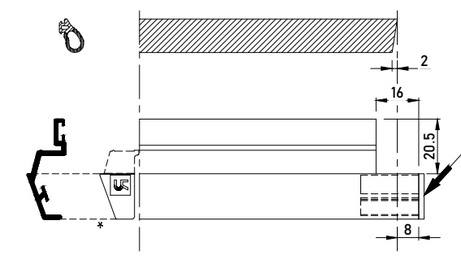

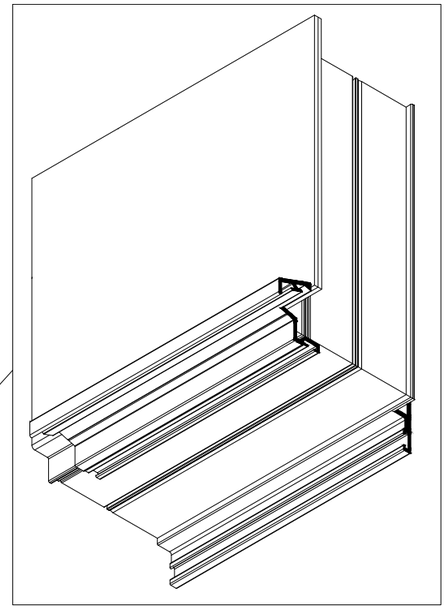

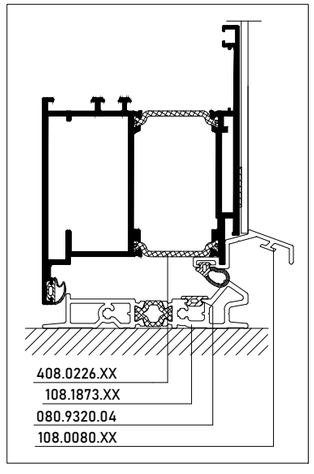

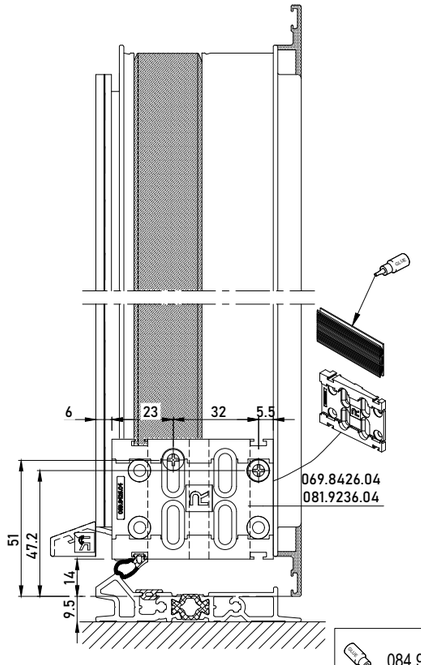

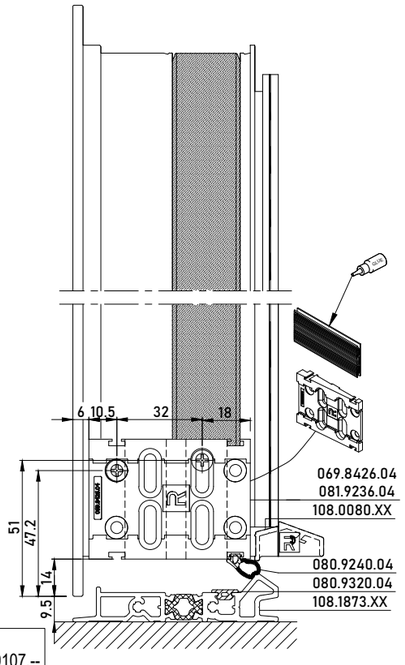



MAGNETUDE PANEL DOOR WEATHER STRIP OUTWARD OPENING

MAGNETUDE PANEL DOOR OUTW. OPENING WITH DOUBLE WEATHER STRIP

MASTERLINE 8-FP, MASTERLINE 8-Fu

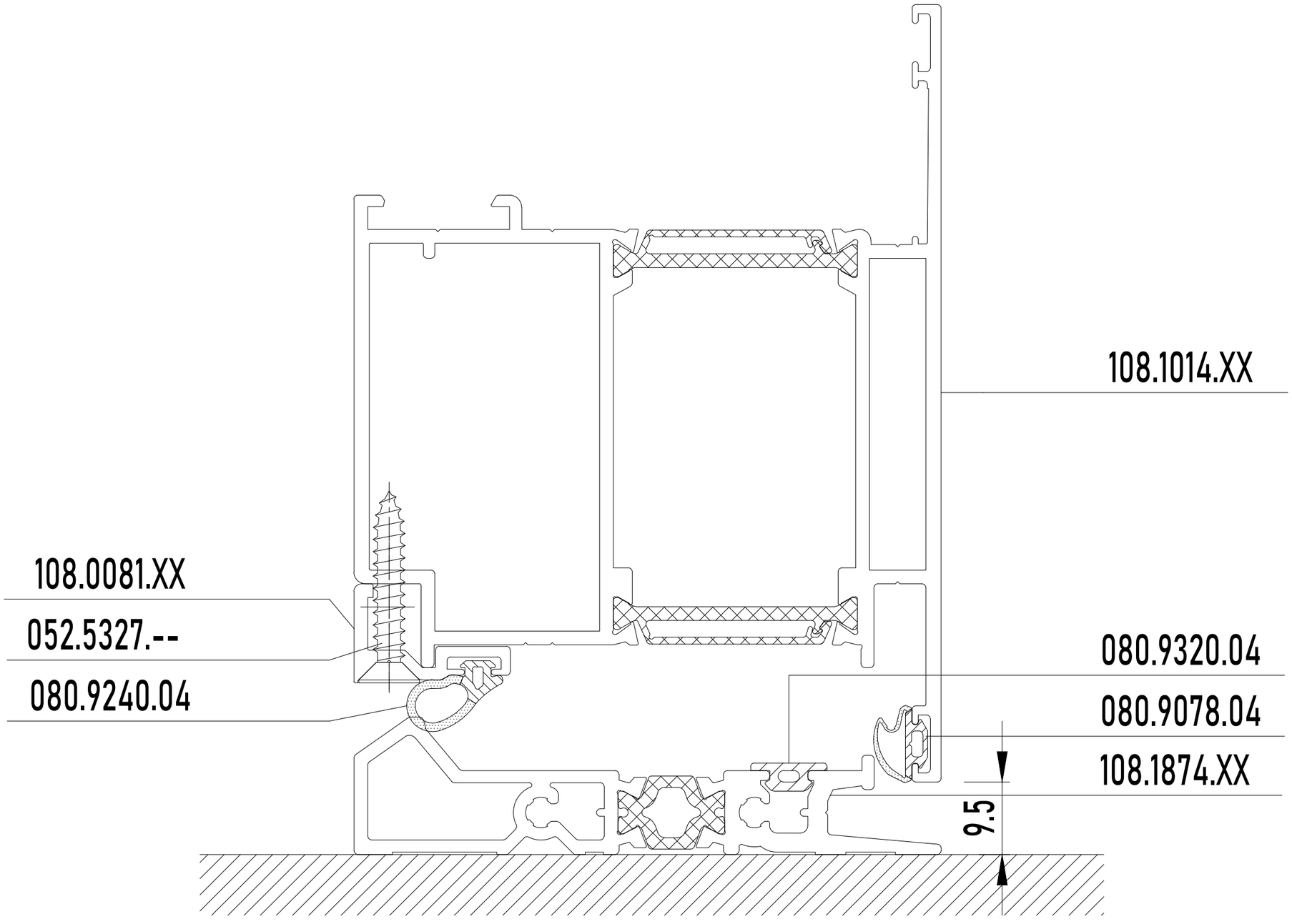

MILLING EURONUT BALCONY DOOR 2024

OPENING EURONUT | 197.F500.00

MASTERLINE 8-Fu

	097.0183.00	408.0112.XX 4F8.1015.XX 408.0502.XX

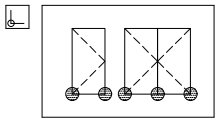

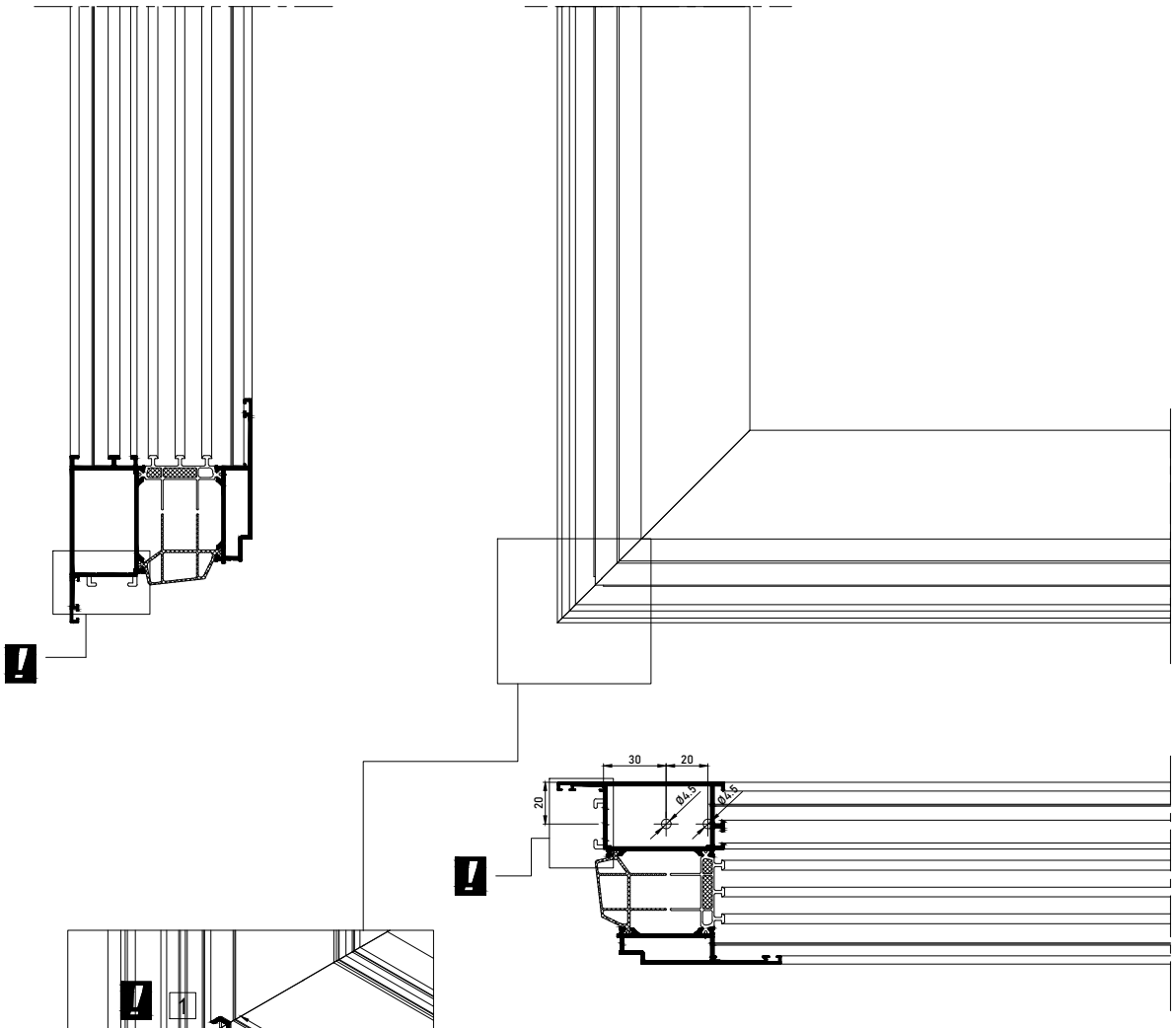

MONTAGEVOLGORDE
L 'ORDRE DE MONTAGE
THE ORDER OF ASSEMBLY
MONTAGEREIHENFOLGE
1 2 3 .

HOEK EURO-GROEF VERWIJDERD + ONDERPROFIEL DOORLOOPGAT
EURO-GROVE D'ANGLE ENLEVÉE + PROFIL DE FOND TROU DE PASSAGE
CORNER EURO-GROVE REMOVED + BOTTOM PROFILE THROUGH HOLE
ECKE EURO-NUT ENTFERNT + BODENPROFIL MIT DURCHGANGSLOCH

MILLING EURONUT BALCONY DOOR 2024

OPENING EURONUT | 095.E000.00

MASTERLINE 8-Fu

095.C300.00	408.0112.XX 4F8.1015.XX 408.0502.XX

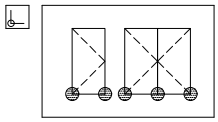

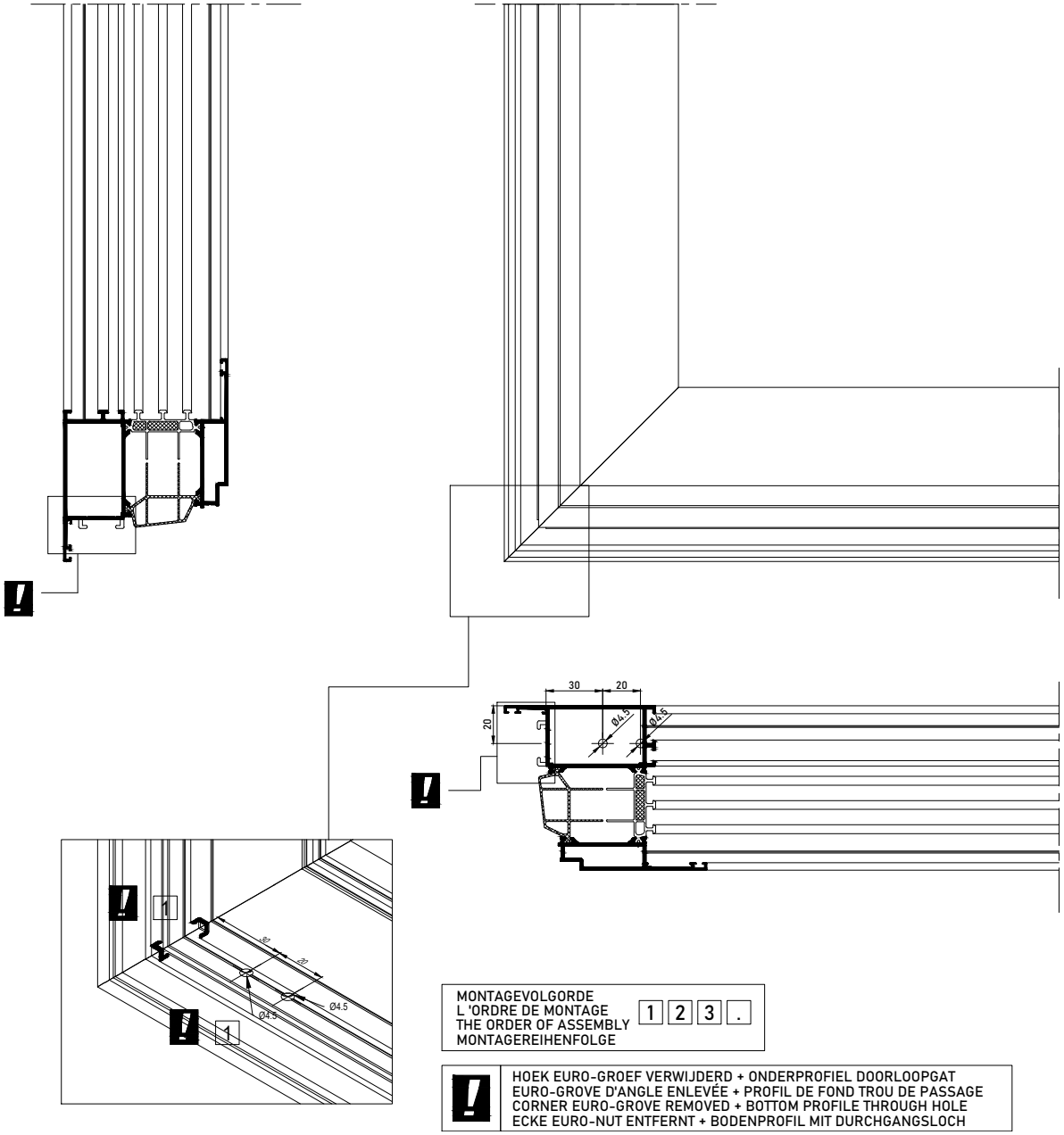

MONTAGEVOLGORDE
L 'ORDRE DE MONTAGE
THE ORDER OF ASSEMBLY
MONTAGEREIHENFOLGE
1 2 3 .

HOEK EURO-GROEF VERWIJDERD + ONDERPROFIEL DOORLOOPGAT
EURO-GROVE D'ANGLE ENLEVÉE + PROFIL DE FOND TROU DE PASSAGE
CORNER EURO-GROVE REMOVED + BOTTOM PROFILE THROUGH HOLE
ECKE EURO-NUT ENTFERNT + BODENPROFIL MIT DURCHGANGSLOCH

Hardware Info
Beslaginformatie
Informations de quincaillerie
Beschlag-informationen

Reynaers Aluminium

MILLING HANDLE PIVOT WNDOW HORIZONTAL

PIVOT WINDOW INVISIBLE - OPERATION PROFILES

MASTERLINE 8-Fu, OPENING WINDOWS

NOT FOR MASTERLINE 10
ONLY FOR MASTERLINE 8

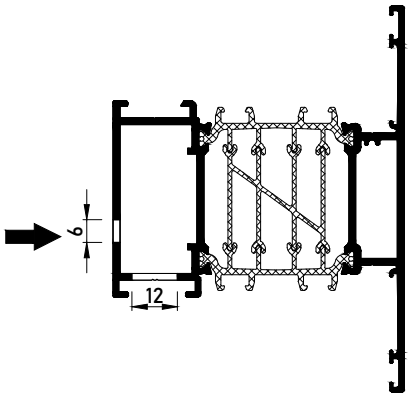

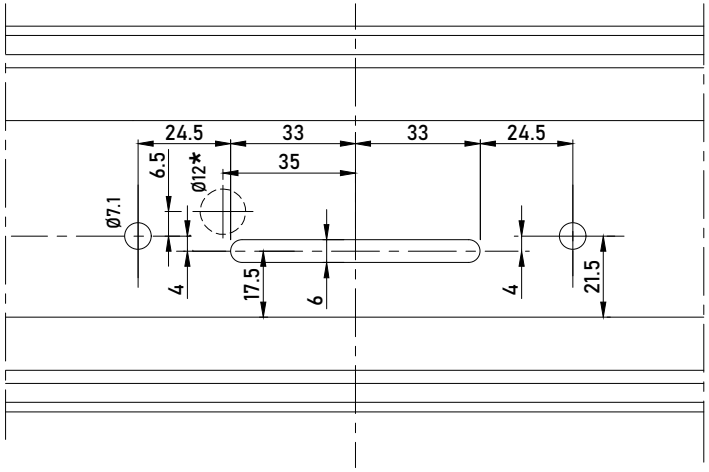

DIN L GETEKEND, DIN R = SPIEGELBEELD
DIN L DESSIN, DIN R = MIROIR
DIN L DRAWN, DIN R = MIRROR
DIN L GEZEICHNET, DIN R = SPIEGEL

MILLING HANDLE PIVOT WNDOW HORIZONTAL

PIVOT WINDOW INVISIBLE - OPERATION PROFILES

MASTERLINE 8-Fu, OPENING WINDOWS

NOT FOR MASTERLINE 10
ONLY FOR MASTERLINE 8

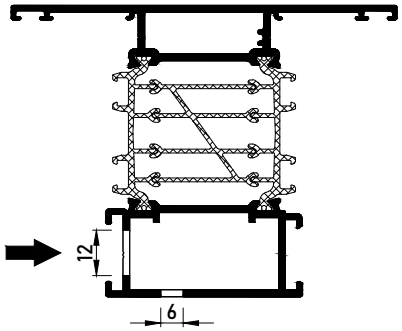

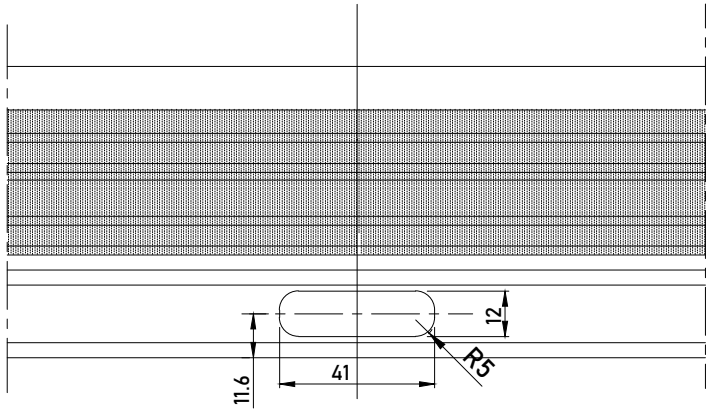

MILLING HANDLE PIVOT WNDOW HORIZONTAL

PIVOT WINDOW INVISIBLE - OPERATION PROFILES

MASTERLINE 8-Fu, OPENING WINDOWS

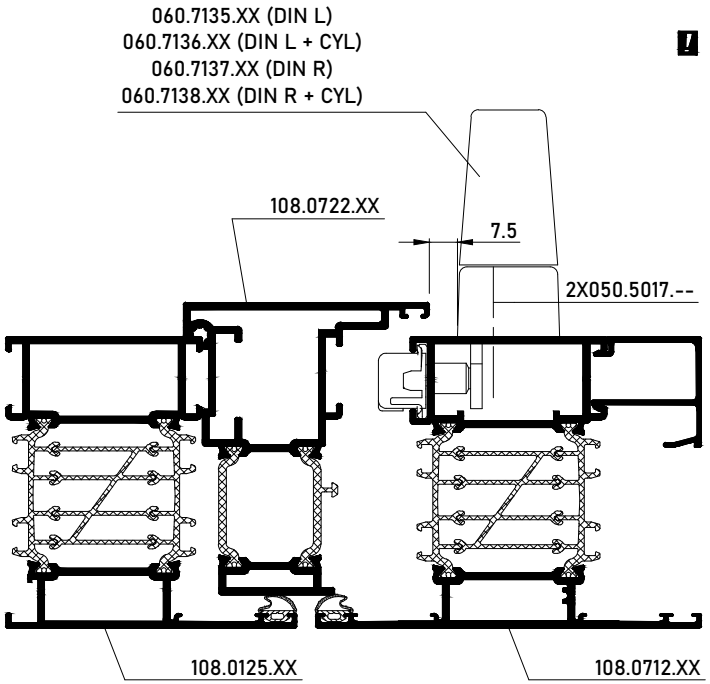

NOT FOR MASTERLINE 10
ONLY FOR MASTERLINE 8

Production Steps
Productiestappen
Étapes de production
Verarbeitungs-Zeichnungen

Reynaers Aluminium

MILLING HINGE DR HAHN VL BAND AT

VL-BAND - DECISION MATRIX ARTICLES + MILLING

MASTERLINE 8-Fu

FB MIN = 500mm / FB MIN RC2 = 624mm

Fh \ Fb	800	900	1000	1100	1200	1300	1400
3000	180Kg	180Kg	180Kg	180Kg	180Kg	180Kg	180Kg
2950	180Kg	180Kg	180Kg	180Kg	180Kg	180Kg	180Kg
2900	180Kg	180Kg	180Kg	180Kg	180Kg	180Kg	180Kg
2850	180Kg	180Kg	180Kg	180Kg	180Kg	180Kg	180Kg
2800	180Kg	180Kg	180Kg	180Kg	180Kg	180Kg	180Kg
2750	180Kg	180Kg	180Kg	180Kg	180Kg	180Kg	180Kg
2700	180Kg	180Kg	180Kg	180Kg	180Kg	180Kg	180Kg
2650	180Kg	180Kg	180Kg	180Kg	180Kg	180Kg	180Kg
2600	180Kg	180Kg	180Kg	180Kg	180Kg	180Kg	180Kg
2550	180Kg	180Kg	180Kg	180Kg	180Kg	180Kg	175Kg
2500	180Kg	180Kg	180Kg	180Kg	180Kg	180Kg	170Kg
2450	180Kg	180Kg	180Kg	180Kg	180Kg	180Kg	165Kg
2400	180Kg	180Kg	180Kg	180Kg	180Kg	175Kg	160Kg
2350	180Kg	180Kg	180Kg	180Kg	180Kg	170Kg	155Kg
2300	180Kg	180Kg	180Kg	180Kg	180Kg	165Kg	150Kg
2250	180Kg	180Kg	180Kg	180Kg	175Kg	160Kg	150Kg
2200	180Kg	180Kg	180Kg	180Kg	170Kg	155Kg	145Kg
2150	180Kg	180Kg	180Kg	180Kg	165Kg	150Kg	140Kg
2100	180Kg	180Kg	180Kg	170Kg	160Kg	145Kg	135Kg
2050	180Kg	180Kg	180Kg	165Kg	155Kg	140Kg	130Kg
2000	180Kg	180Kg	180Kg	160Kg	150Kg	135Kg	125Kg

Max. vleugelgewicht 180Kg
Poids d' ouvrant max. 180Kg
Max. vent weight 180Kg
Max. Flügelgewicht 180Kg

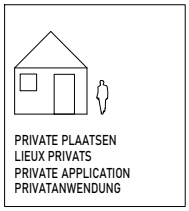

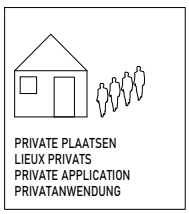



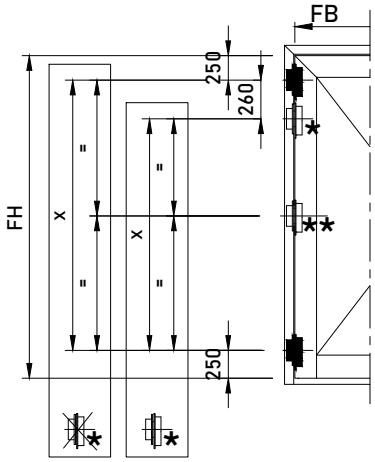

EXTRA SCHARNIEREN - EXTRA CHARNIERES EXTRA BAENDER - EXTRA HINGES	
2xFB ≥ FH	
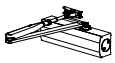	
Bij openbare gebouwen en in zwaar belaste gevallen. Pour les lieux publics en des cas lourdement chargés. In public buildings and for heavily charged cases. In öffentlichen Gebäuden und für hoch beanspruchte Tür.	*
X ≥ 2000 mm	**

(RC2) FB MIN = 624mm	CLASS 2 NETHERLANDS ONLY FB MIN = 500mm

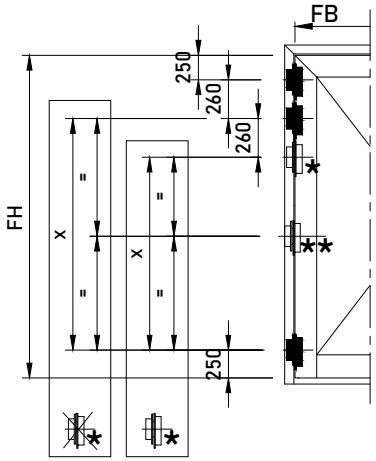

EXTRA SCHARNIEREN - EXTRA CHARNIERES EXTRA BAENDER - EXTRA HINGES	
2xFB ≥ FH	
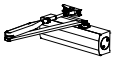	
Bij openbare gebouwen en in zwaar belaste gevallen. Pour les lieux publics en des cas lourdement chargés. In public buildings and for heavily charged cases. In öffentlichen Gebäuden und für hoch beanspruchte Tür.	*
X ≥ 2000 mm	
(RC2) FH ≥ 2700 mm	**
CLASS 2 FH ≥ 2200 mm	
(RC2) 2200 ≤ FH ≤ 2700	OPTIONAL **

MILLING HINGE DR HAHN VL BAND AT

VL-BAND - DECISION MATRIX ARTICLES + MILLING

MASTERLINE 8-Fu

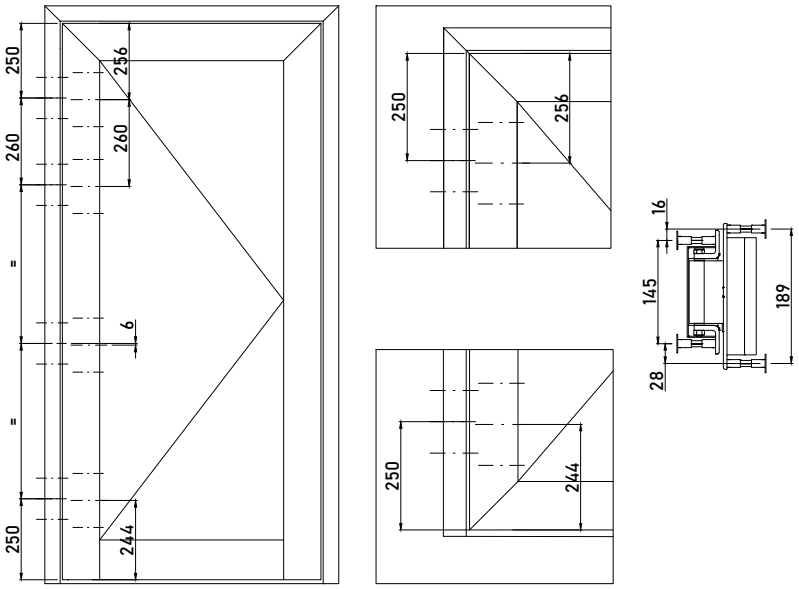

BIJ ELKE VERSTELLING MOET DE DEURVLEUGEL ONTLAST WORDEN.
AVANT TOUT REGLAGE SOULAGER LE VANTAIL. AUCUN REGLAGE NE DOIT ETRE EFFECTUER EN CHARGE.
WHENEVER READJUSTING THE DOOR VENT, THE LOAD MUST BE TAKEN OFF THE CENTRE OF GRAVITY.
BEI ALLEN VERSTELLUNGEN IST DER TURFLUGEL IM SCHWERPUNKT ZU ENTLASTEN.

ONDERSTE SCHARNIER MOET ALTIJD HET GEWICHT DRAGEN, ALLEEN DE BOVENSTE SCHARNIEREN VERSTELLEN.
LA PAUMELLE INFERIEURE DOIT PORTER, AJUSTEZ UNIQUEMENT LES PAUMELLES SUPERIEURES.
LOWER HINGE SHOULD BEAR WEIGHT, ONLY ADJUST THE UPPER HINGES.
UNTERES BAND SOLL TRAGEN, OBERE BANDER NUR NACHSTELLEN.

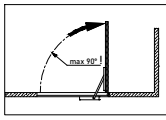

OPENINGSBEGRENZER 90° NOODZAKELIJK
LIMITEURS D'OVERTURE 90° NECESSAIRE
OPENING LIMITATION 90° NECESSARY
OEFFNUNGSBEGRENZUNG 90° ERFORDERLICH

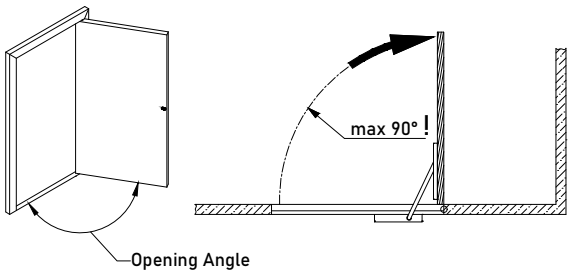

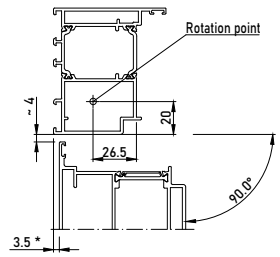

*) OPGELET VOOR MUURAFWERKING = GEBRUIK LANGERE KADER
ATTENTION POUR LA FINITION DES MURS = UTILISER UN CADRE PLUS GRAND
BE AWARE FOR WALL FINISHING = USE LARGER FRAME
ACHTUNG BEI WANDVERKLEIDUNG = GRÖSSEREN RAHMEN VERWENDEN

MILLING HINGE DR HAHN VL BAND AT

VL-BAND - DECISION MATRIX ARTICLES + MILLING

MASTERLINE 8-Fu

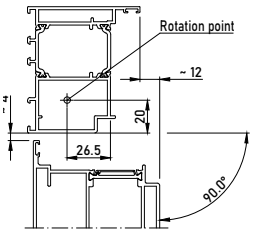

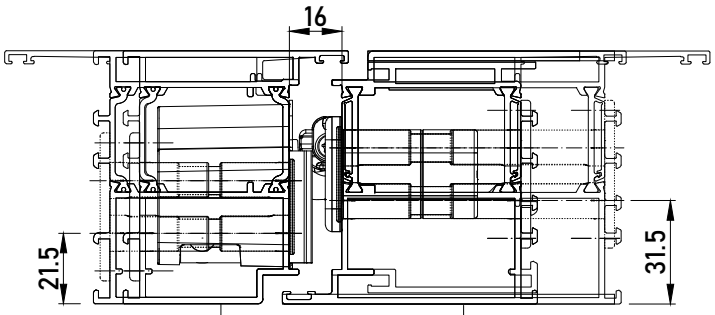

MASTERLINE 8			
408.0498.XX	065.6660.--	F01	ONLY CNC
408.0598.XX	065.6660.--	F01	ONLY CNC
408.0798.XX	065.6660.--	F01	ONLY CNC
408.0898.XX	065.6660.--	F01	ONLY CNC

065.6663.35

MASTERLINE 8			
408.0026.XX	065.6660.--	V20	ONLY CNC
408.1316.XX	065.6660.--	V20	ONLY CNC
408.1334.XX	065.6660.--	V20	ONLY CNC
408.0096.XX	065.6662.--	V20	ONLY CNC

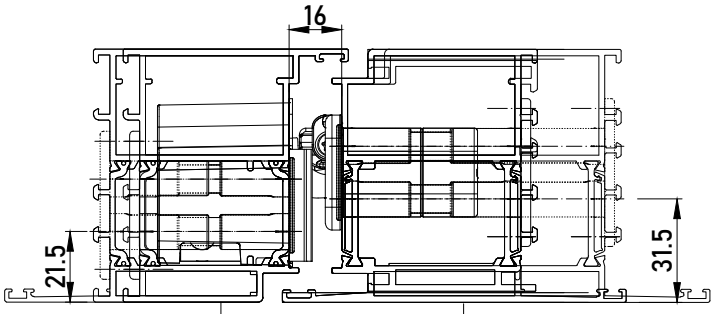

MASTERLINE 8			
408.0869.XX	065.6660.--	F02	ONLY CNC
408.0469.XX	065.6660.--	F02	ONLY CNC
408.0569.XX	065.6660.--	F02	ONLY CNC
408.0769.XX	065.6660.--	F02	ONLY CNC

065.6663.35

MASTERLINE 8			
408.0014.XX	065.6660.--	V21	ONLY CNC
408.0016.XX	065.6660.--	V21	ONLY CNC
408.1314.XX	065.6660.--	V21	ONLY CNC
408.1334.XX	065.6660.--	V21	ONLY CNC
408.0094.XX	065.6662.--	V21	ONLY CNC

MILLING HINGE DR HAHN VL BAND AT

VL-BAND - DECISION MATRIX ARTICLES + MILLING

MASTERLINE 8-Fu

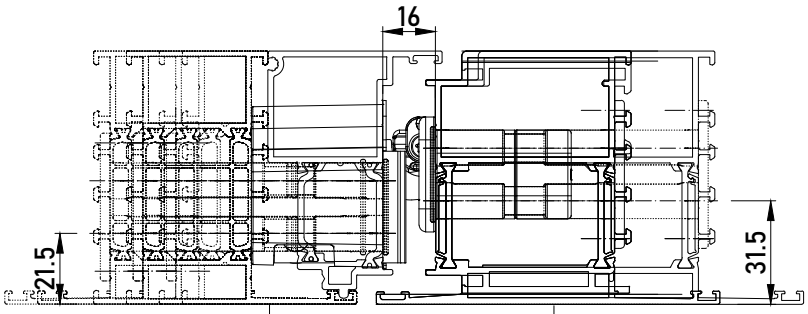

MASTERLINE 8			
G1 + 408.1028.XX	065.6661.--	F03	ONLY CNC
G2 + 408.1028.XX	065.6662.--	F03	ONLY CNC

065.6663.35

MASTERLINE 8			
408.0014.XX	065.6660.--	V21	ONLY CNC
408.0016.XX	065.6660.--	V21	ONLY CNC
408.1314.XX	065.6660.--	V21	ONLY CNC
408.1334.XX	065.6660.--	V21	ONLY CNC
408.0094.XX	065.6662.--	V21	ONLY CNC

G1				
408.1036.XX	508.1036.XX	408.0183.XX	508.0183.XX	408.0442.XX
508.0442.XX	408.0443.XX	508.0443.XX	408.0186.XX	508.0186.XX
408.0113.XX	508.0113.XX	408.0120.XX	508.0120.XX	408.0120.XX
508.0120.XX	408.0118.XX	508.0118.XX	408.0890.XX	508.0890.XX
408.0892.XX	508.0892.XX	408.0170.XX	508.0170.XX	408.0171.XX
508.0171.XX	408.0172.XX	508.0172.XX	408.1073.XX	508.1073.XX
408.0174.XX	508.0174.XX			

G2				
408.0160.XX	508.0160.XX	408.0165.XX	508.0165.XX	408.0111.XX
508.0111.XX	408.0894.XX	508.0894.XX		

	MOGELIJKE KABELDOORGANG PASSAGE DE CABLE POSSIBLES POSSIBLE CABLE PASSAGE MOGLICHE KABELDURCHGANG	
061.6636.--	√	√
061.6637.--	-	√
061.8416.--	-	√
061.8413.--	√	√
061.8414.--	√	√
061.8310.--	-	√
061.8410.--	-	√
061.8411.--	-	√

RC3 NIET TOEGESTAAN
RC3 INTERDIT
RC3 NOT ALLOWED
RC3 NICHT ERLAUBT

FP NIET TOEGESTAAN
FP INTERDIT
FP NOT ALLOWED
FP NICHT ERLAUBT

!!!!!! (RC2) / CLASS 2 : GEEN EXTRA INBRAAKBEVEILIGING NODIG - AUCUNE PIECE ANTI-VOL NECESSAIRE -
: NO EXTRA SECURITY DEVICES NEEDED - KEIN ZUSATZLICHER EINBRUCHSCHUTZ ERFORDERLICH

MILLING HINGE DR HAHN VL BAND AT

VL-BAND - DECISION MATRIX ARTICLES + MILLING

MASTERLINE 8-Fu

F01

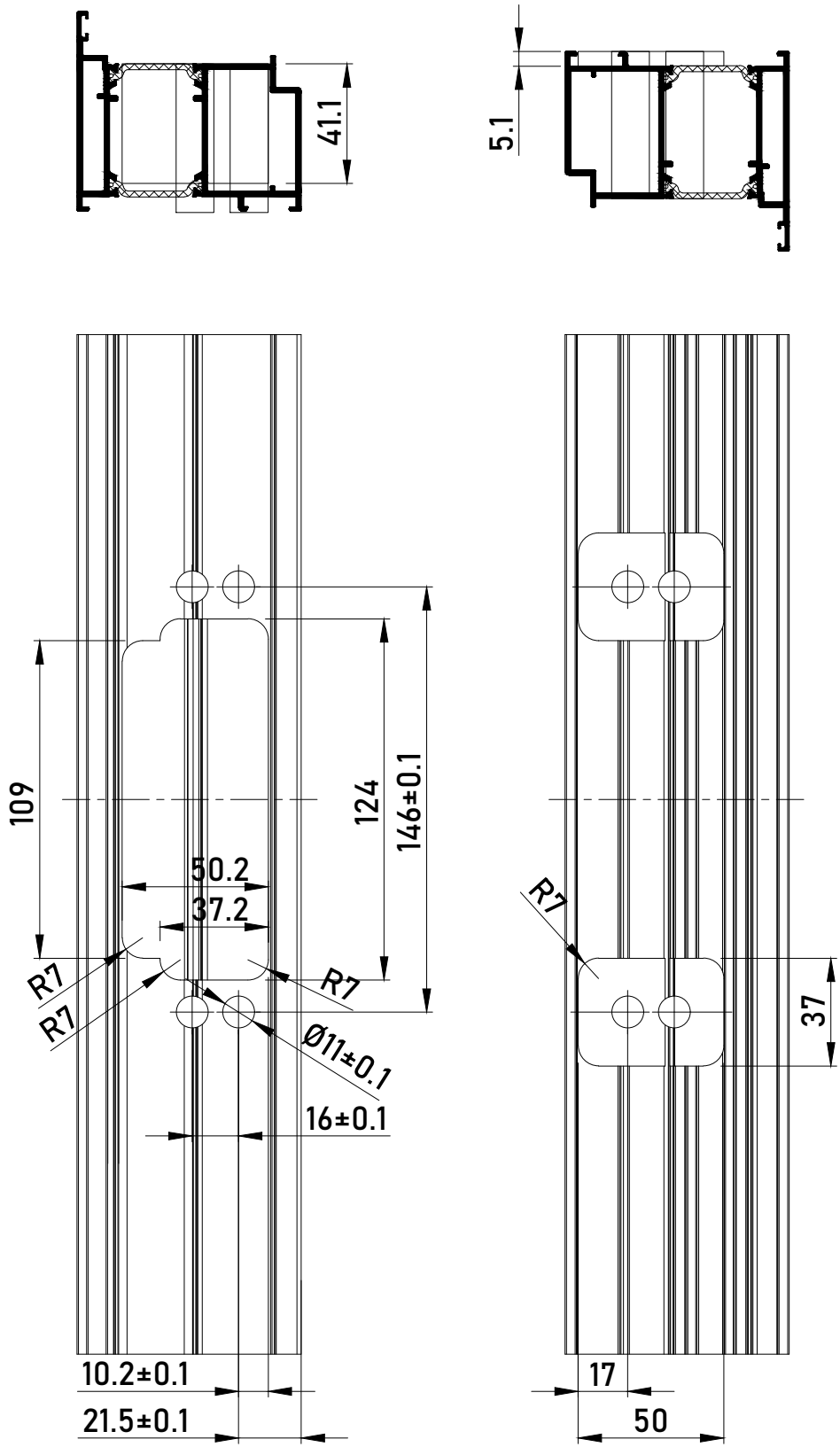

DIN R GETEKEND, DIN L = SPIEGELBEELD
DIN R DESSIN, DIN L = MIROIR
DIN R DRAWN, DIN L = MIRROR
DIN R GEZEICHNET, DIN L = SPIEGEL

F02

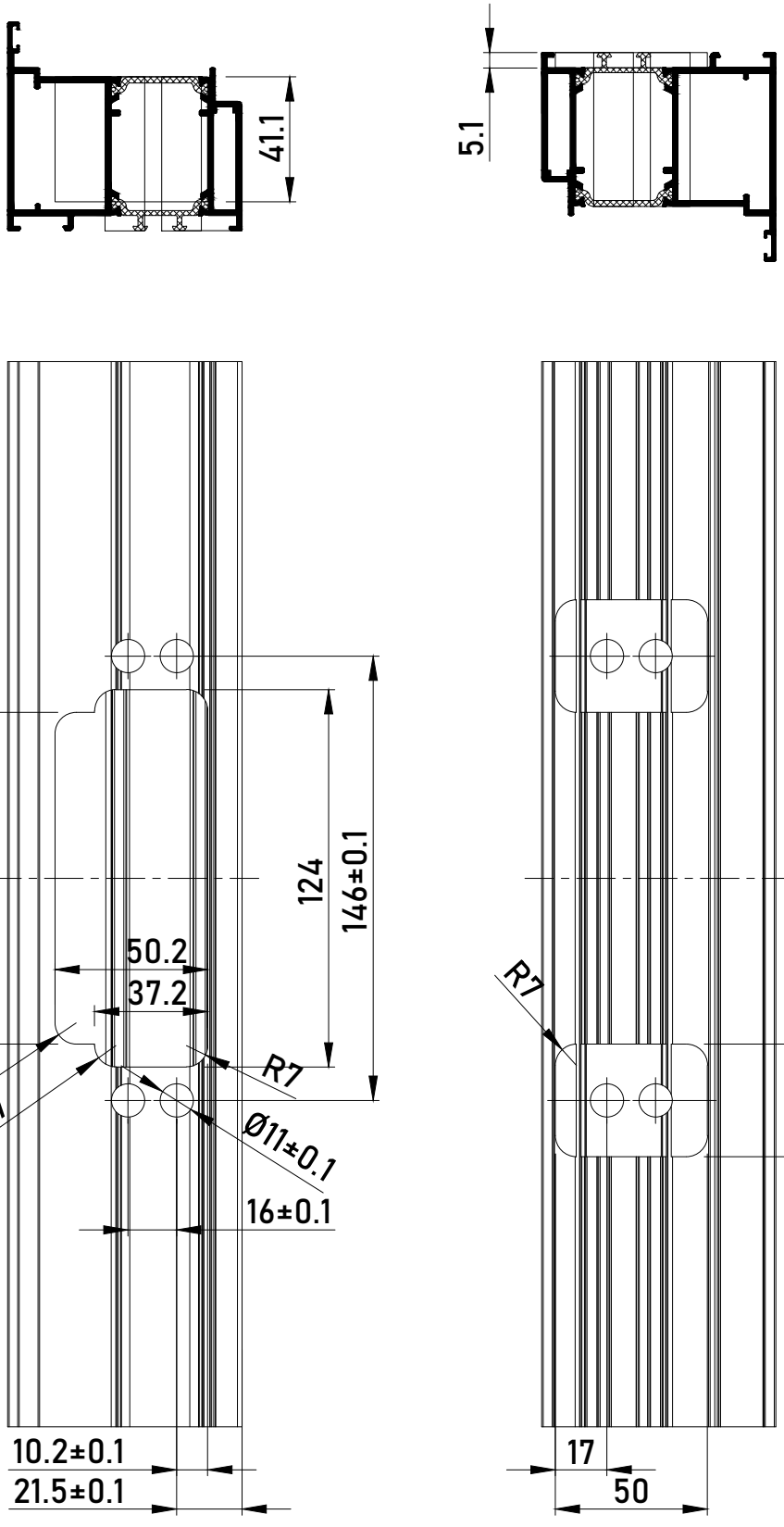

DIN R GETEKEND, DIN L = SPIEGELBEELD
DIN R DESSIN, DIN L = MIROIR
DIN R DRAWN, DIN L = MIRROR
DIN R GEZEICHNET, DIN L = SPIEGEL

MILLING HINGE DR HAHN VL BAND AT

VL-BAND - DECISION MATRIX ARTICLES + MILLING

MASTERLINE 8-Fu

F03

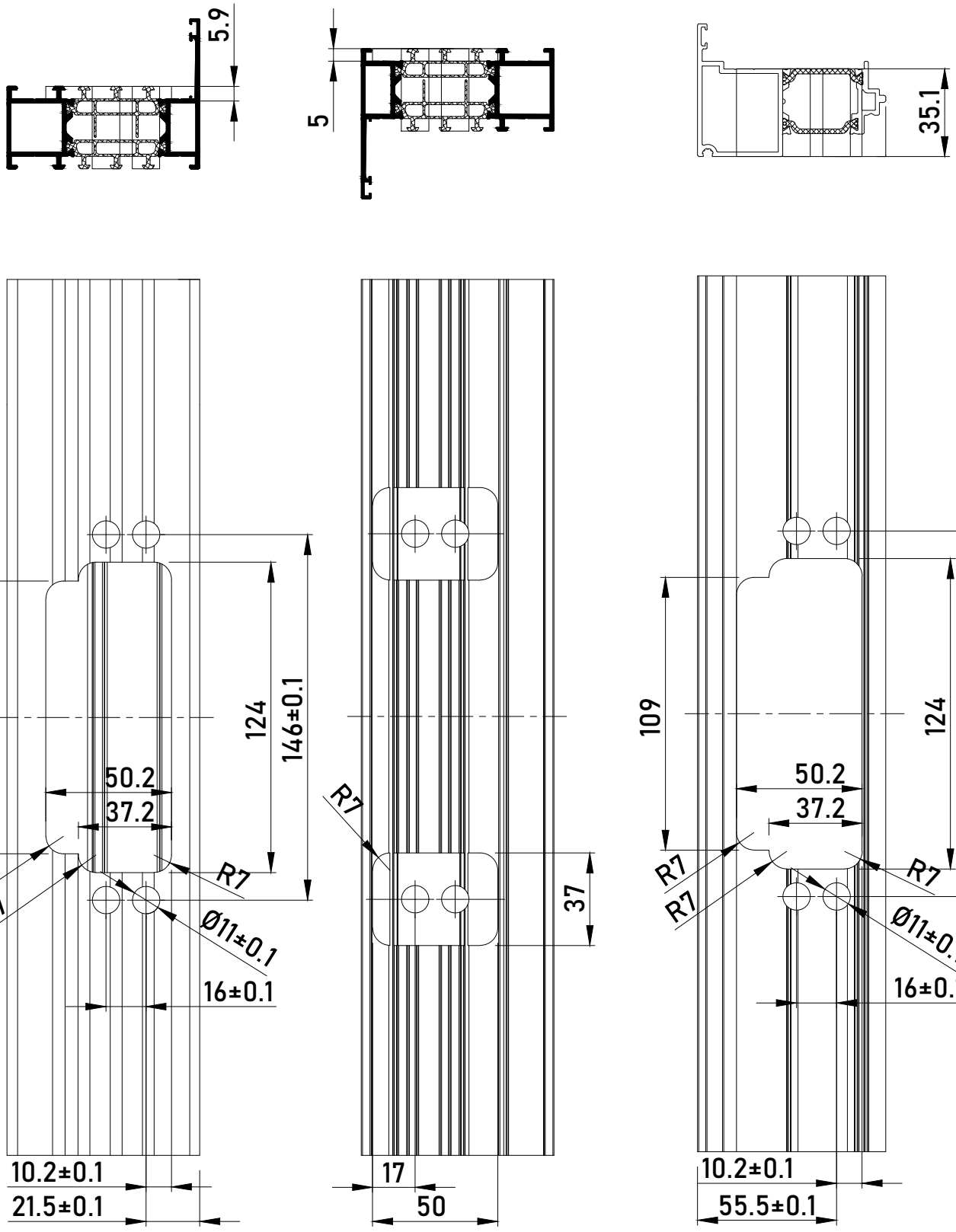

DIN R GETEKEND, DIN L = SPIEGELBEELD
DIN R DESSIN, DIN L = MIROIR
DIN R DRAWN, DIN L = MIRROR
DIN R GEZEICHNET, DIN L = SPIEGEL

V20

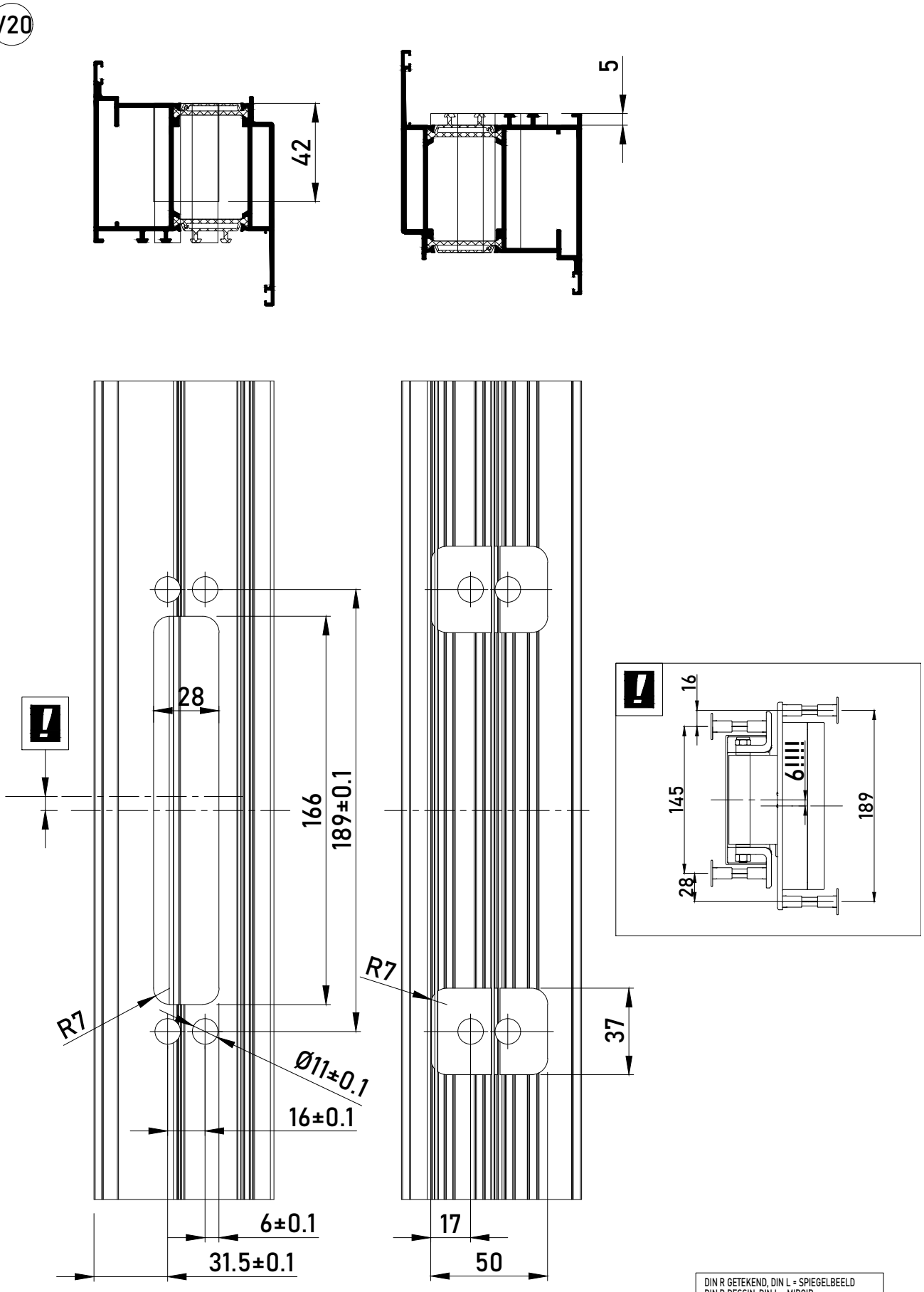

DIN R GETEKEND, DIN L = SPIEGELBEELD
DIN R DESSIN, DIN L = MIROIR
DIN R DRAWN, DIN L = MIRROR
DIN R GEZEICHNET, DIN L = SPIEGEL

MILLING HINGE DR HAHN VL BAND AT

VL-BAND - DECISION MATRIX ARTICLES + MILLING

MASTERLINE 8-Fu

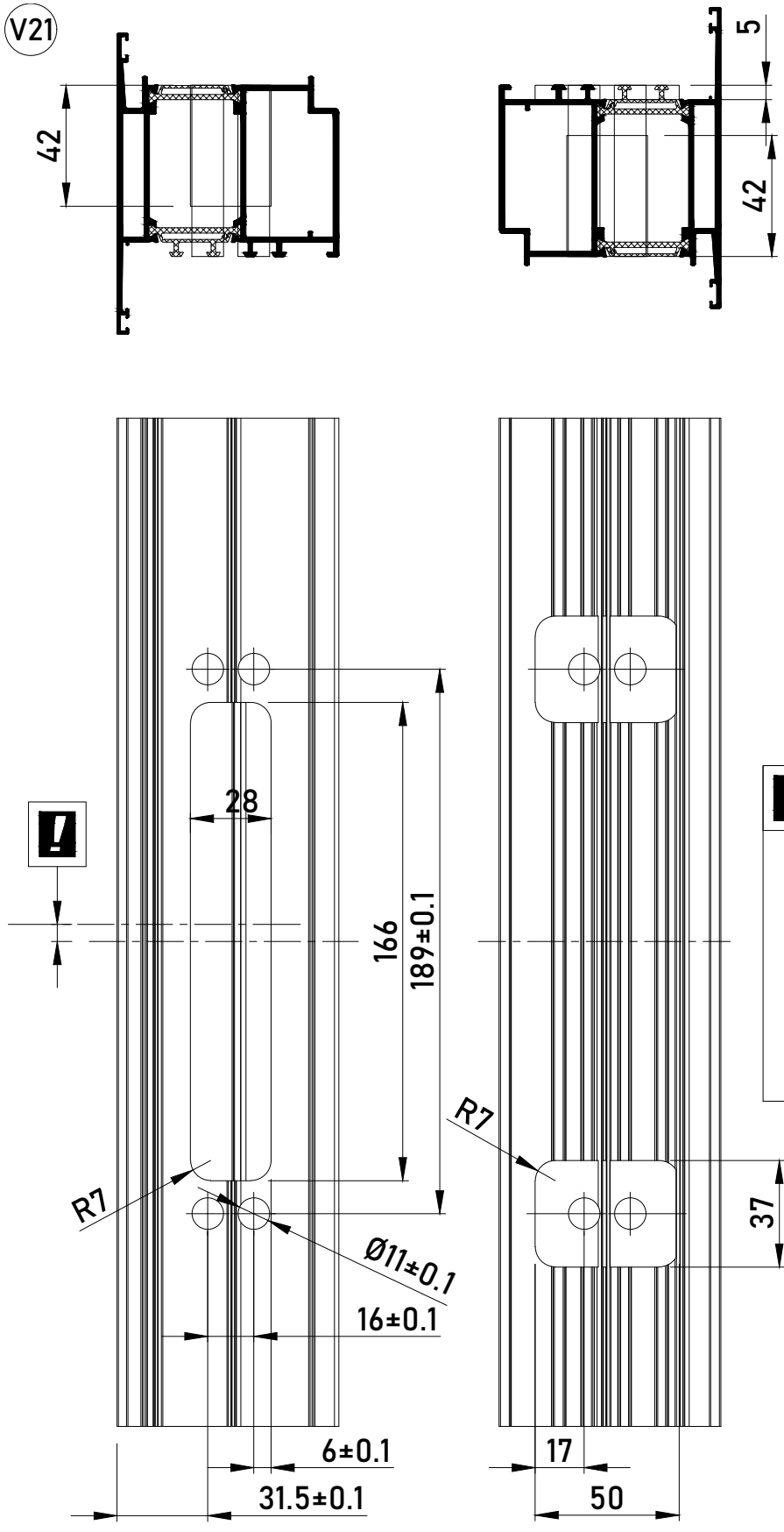

DIN R GETEKEND, DIN L = SPIEGELBEELD
DIN R DESSIN, DIN L = MIROIR
DIN R DRAWN, DIN L = MIRROR
DIN R GEZEICHNET, DIN L = SPIEGEL

MILLING HINGE DR HAHN VL BAND AT

VL-BAND - DECISION MATRIX ARTICLES + MILLING

MASTERLINE 8-Fu

ENKEL FREZEN OP CNC ==> NIET TOEPASBAAR OP SBZ 122
SEULEMENT FRAISE SUR CNC ==> NON APPLICABLE A SBZ 122
ONLY MILL ON CNC ==> NOT APPLICABLE ON SBZ 122
NUR FRAESEN AUF CNC ==> NICHT ANWENDBAR FUR SBZ 122

ALTIJD DE FREZINGEN & AFMETINGEN CONTROLEREN
VERIFIEZ TOUJOURS LES FRAISES ET LES DIMENSION
ALWAYS CHECK THE MILLINGS & DIMENSIONS
UBERPRUFEN SIE IMMER MUHLEN UND ABMESSUNGEN

PROFIELEN STEEDS VERWERKEN VOLGENS DE RICHTLIJNEN VAN DE REYNAERS AUTOMATION AFDELING
TRAITEZ TOUJOURS LES PROFILS SELON LES DIRECTIVES DU DEPARTMENT D'AUTOMATISATION DE REYNAERS
ALWAYS PROCESS PROFILES ACCORDING TO THE GUIDELINES OF THE REYNAERS AUTOMATION DEPARTMENT
VERARBEITEN SIE PROFILE IMMER GEMASS DEN RICHTLINIEN DER REYNAERS-AUTOMATIONABTEILUNG

- CONTROLEER PARAMETERS VAN FREESMACHINE, CORRECTE INSTELLING = CORRECTE FREZING
  VERIFIER LES PARAMETRES OU LA FRAISEUSE. AJUSTEMENT CORRECT = USINAGE CORRECT
  CHECK PARAMETERS OF MILLING MACHINE. CORRECT ADJUSTMENT = CORRECT MILLING
  PARAMETER ODER FRAMACHINE PRUFEN. RICHTIGE EINSTELLUNG = RICHTIGES FRASEN
- NIEUWE FREES GEBRUIKEN
  UTILISER UN NOUVEAU FRAISE
  USE A NEW MILLING HEAD
  VERWENDEN SIE EINEN NEUEN FRAESE
- PROFIELEN CORRECT OPSPANNEN
  SERREZ CORRECTEMENT LES PROFILS
  PROPERLY CLAMP THE PROFILES
  KLEMMEN SIE DIE PROFILE RICHTIG FEST

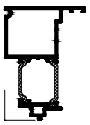

AANSLAGPROFIEL STEEDS APART FREZEN
PROFILE DE BUTEE SEPAREMENT FRAISER
CONNECTION PROFILE ALWAYS SEPARATE FRESEN
ANSCHLAGPROFIL IMMER SEPARAT FRASEN

LIJN DE PROFIELEN CORRECT UIT TIJDEN DE ASSEMBLAGE
ALIGNER CORRECTEMENT LES PROFILS PENDANT L'ASSEMBLAGE
ALIGN THE PROFILES CORRECTLY DURING ASSEMBLY
RICHTEN SIE DIE PROFILE WAHREND DER MONTAGE RICHTIG AUS

MILLING HINGE MASTERLINE 8-Fu Pivot Door

MILLING FOR PIVOT HINGE

MASTERLINE 8-Fu

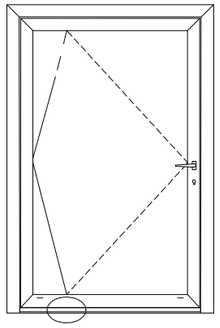

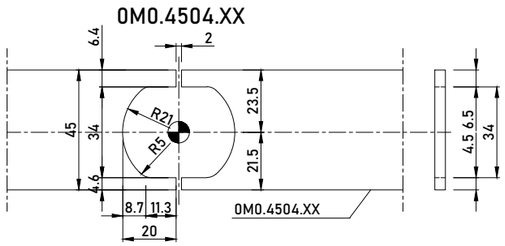

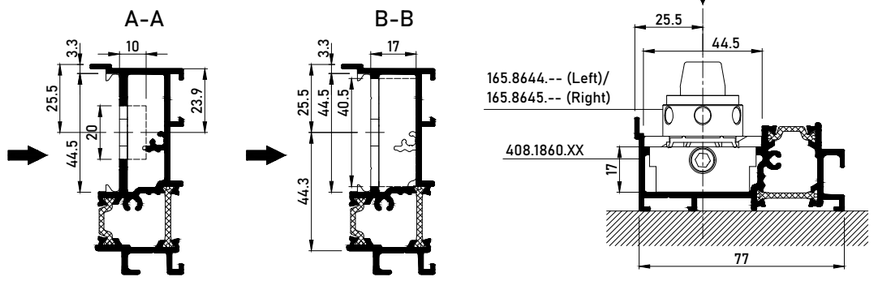

		-	
		-	
	095.C300.00 or 095.N300.00 095.N600.00		
	-		
	-		

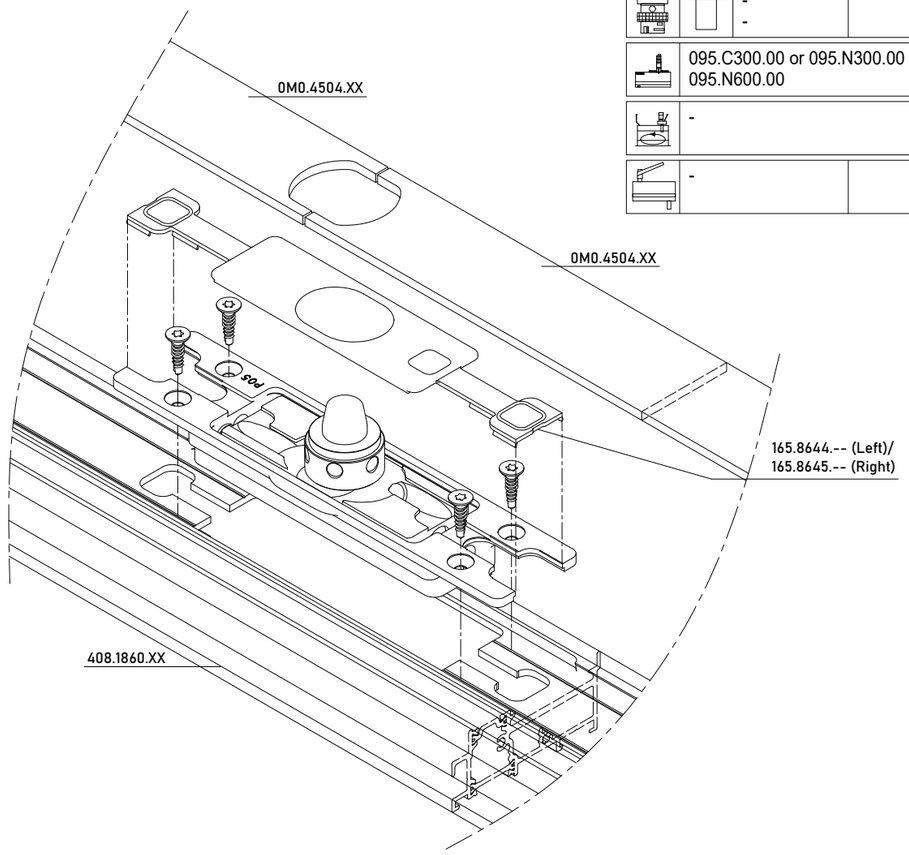

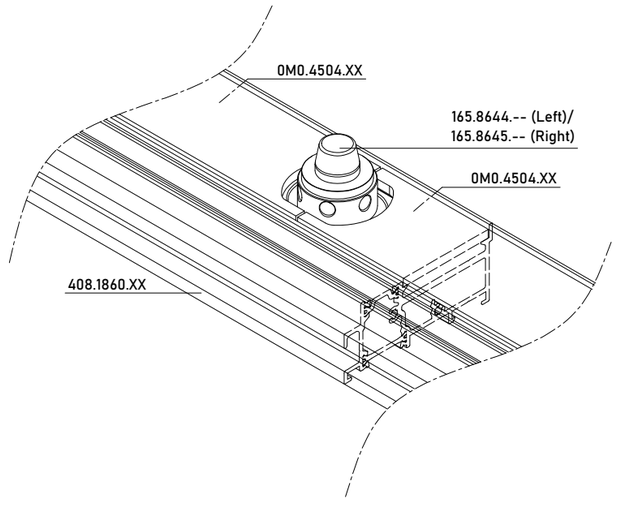

MILLING HINGE MASTERLINE 8-Fu Pivot Door

MILLING FOR PIVOT HINGE

MASTERLINE 8-Fu

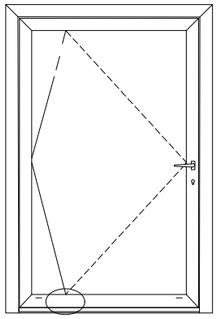

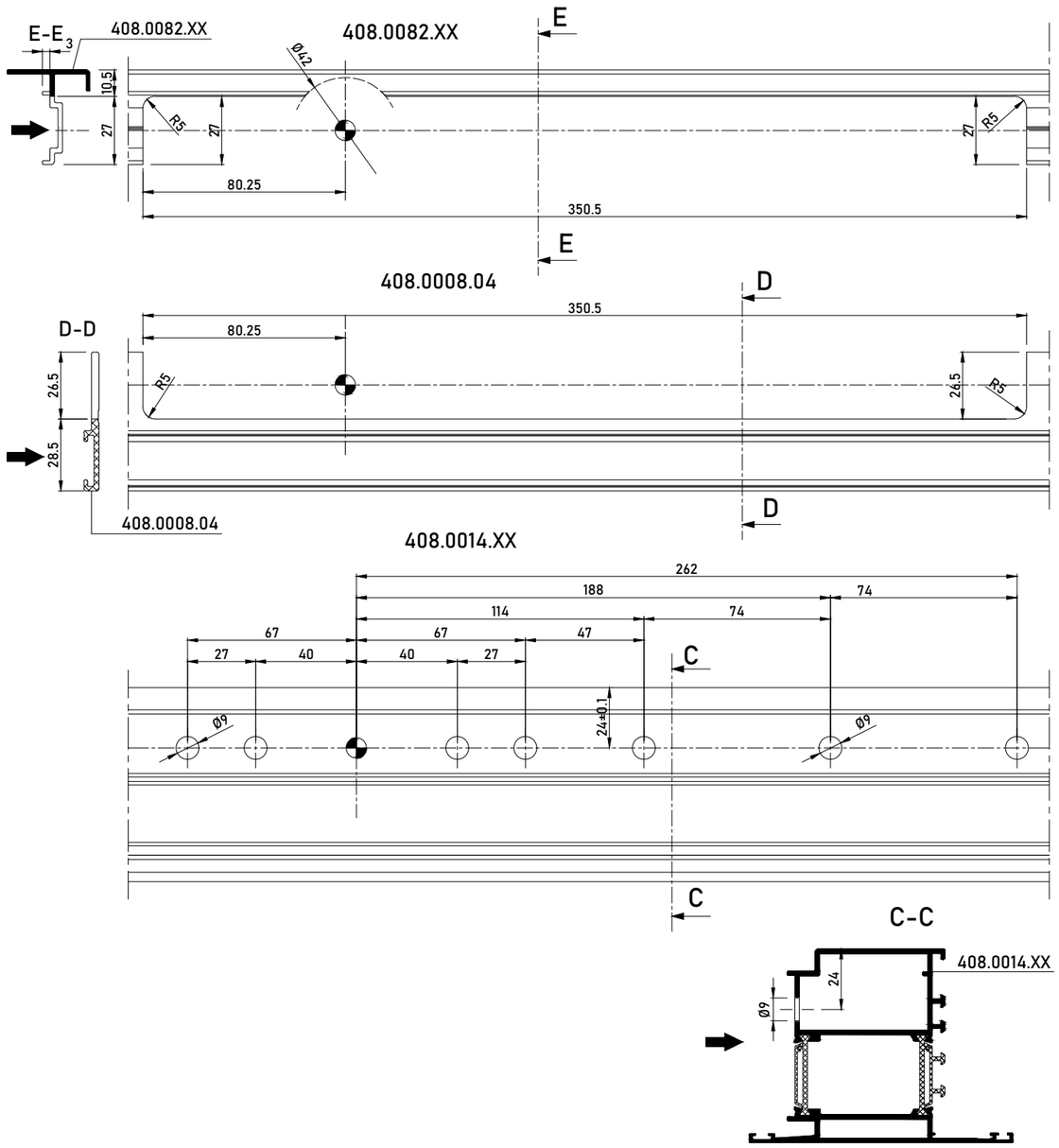

		- -	
	095.C300.00 or 095.N300.00 095.N600.00		
	-		
	-		

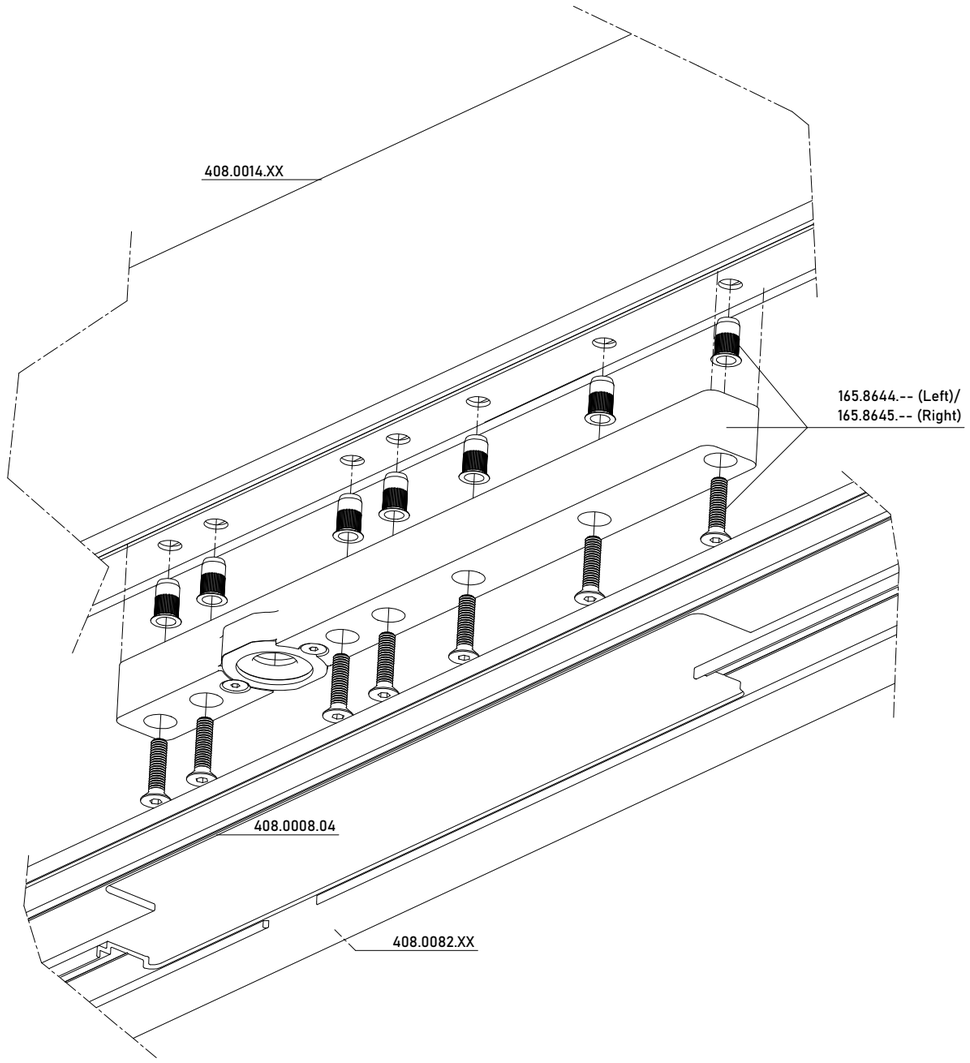

MILLING HINGE MASTERLINE 8-Fu Pivot Door

MILLING FOR PIVOT HINGE

MASTERLINE 8-Fu

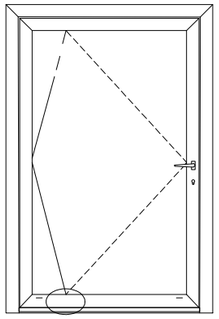

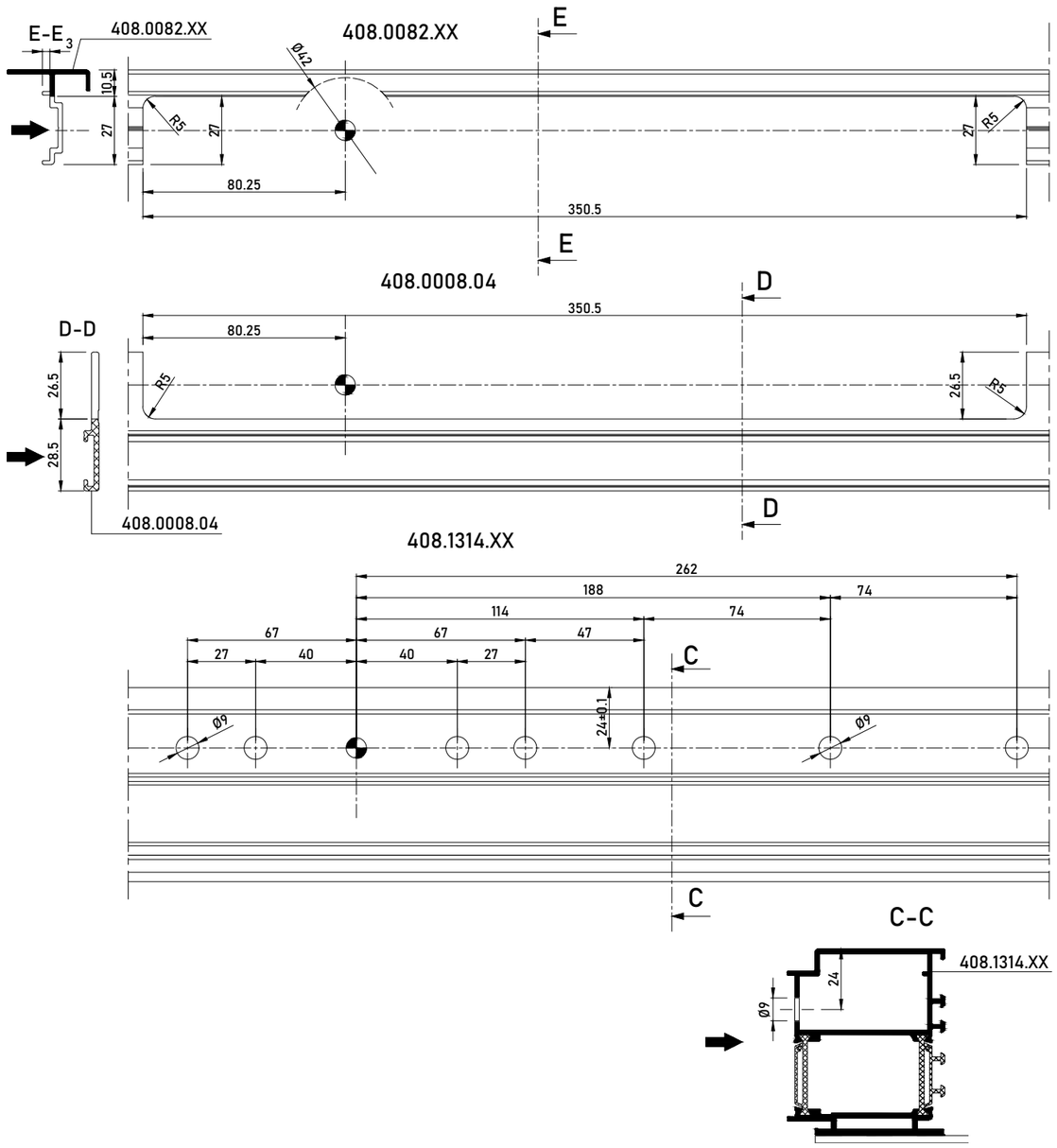

		- -	
	095.C300.00 or 095.N300.00 095.N600.00		
	-		
	-		

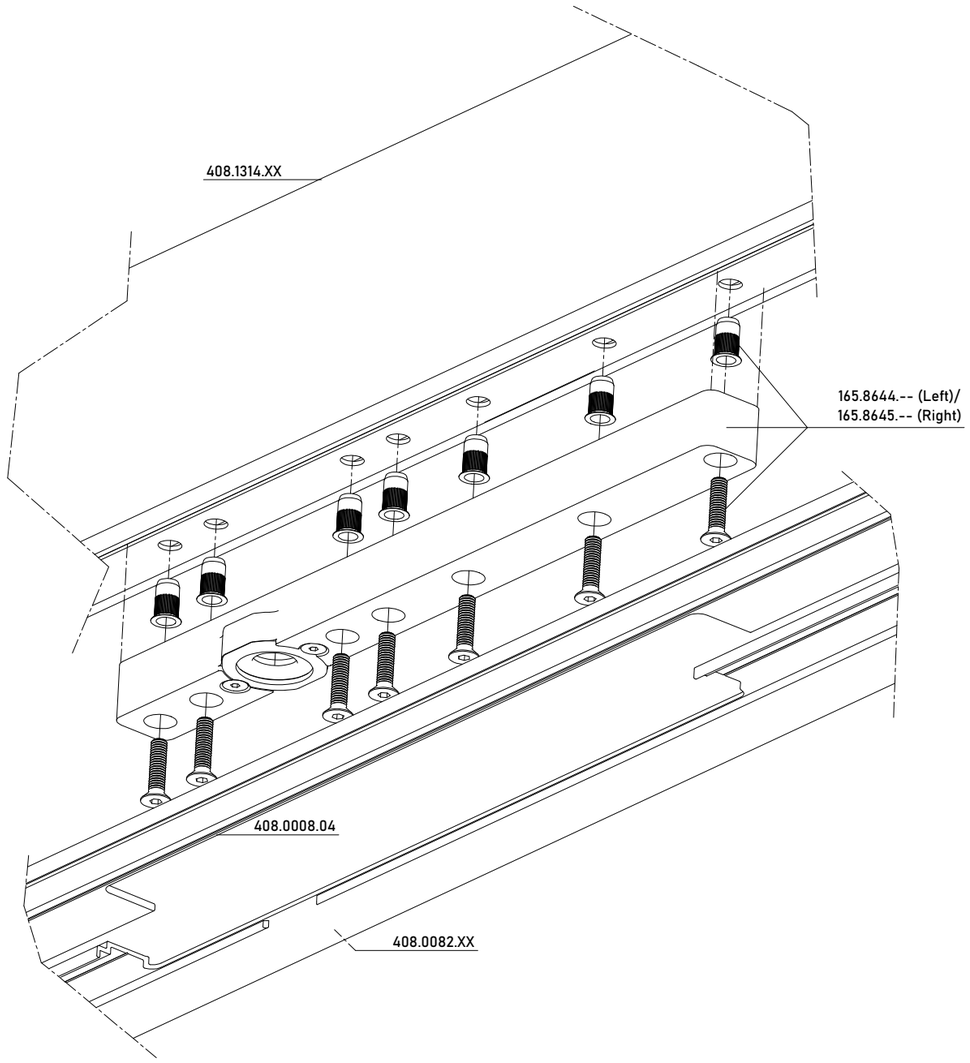

MILLING HINGE MASTERLINE 8-Fu Pivot Door

MILLING FOR PIVOT HINGE

MASTERLINE 8-Fu

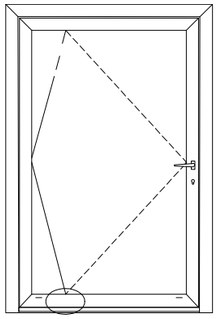

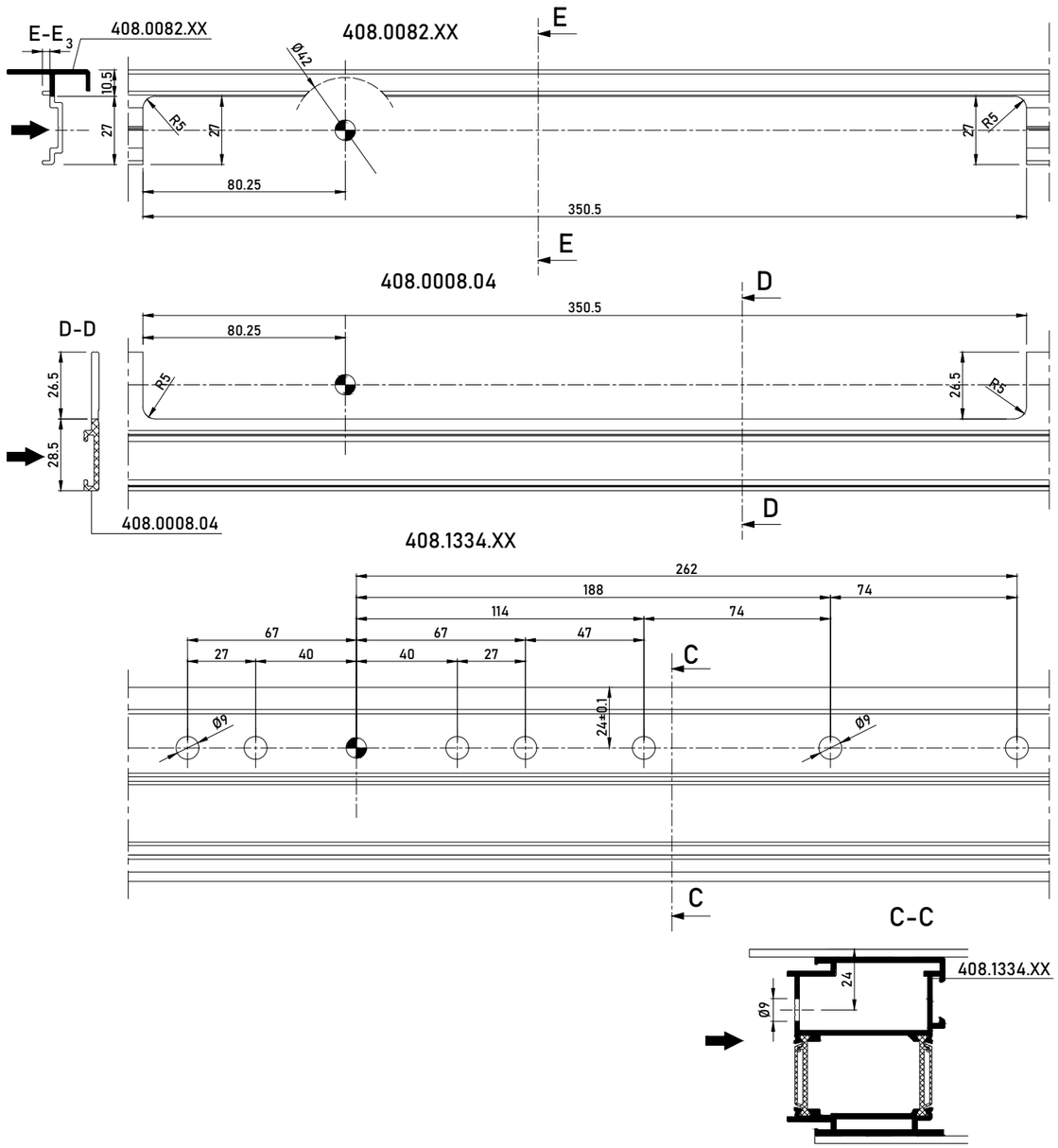

		- -	
	095.C300.00 or 095.N300.00 095.N600.00		
	-		
	-		

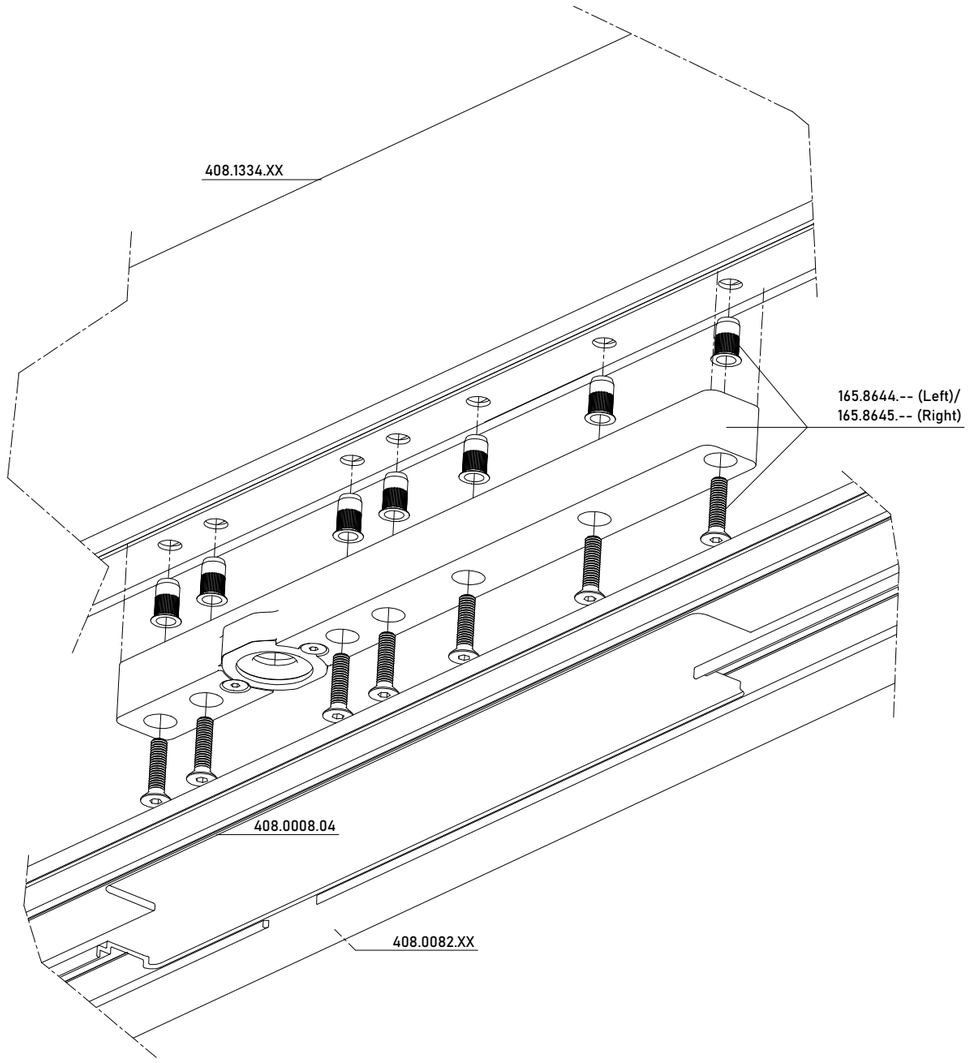

MILLING HINGE MASTERLINE 8-Fu Pivot Door

MILLING FOR PIVOT HINGE

MASTERLINE 8-Fu

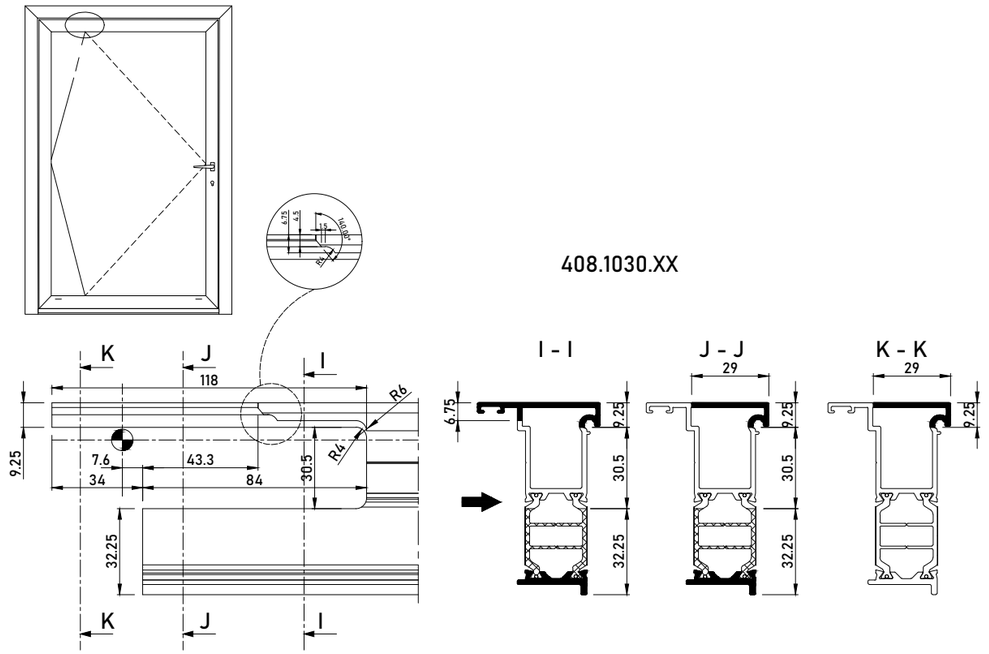

		-	
		-	
	095.C300.00 or 095.N300.00 095.N600.00		
	-		
	-		

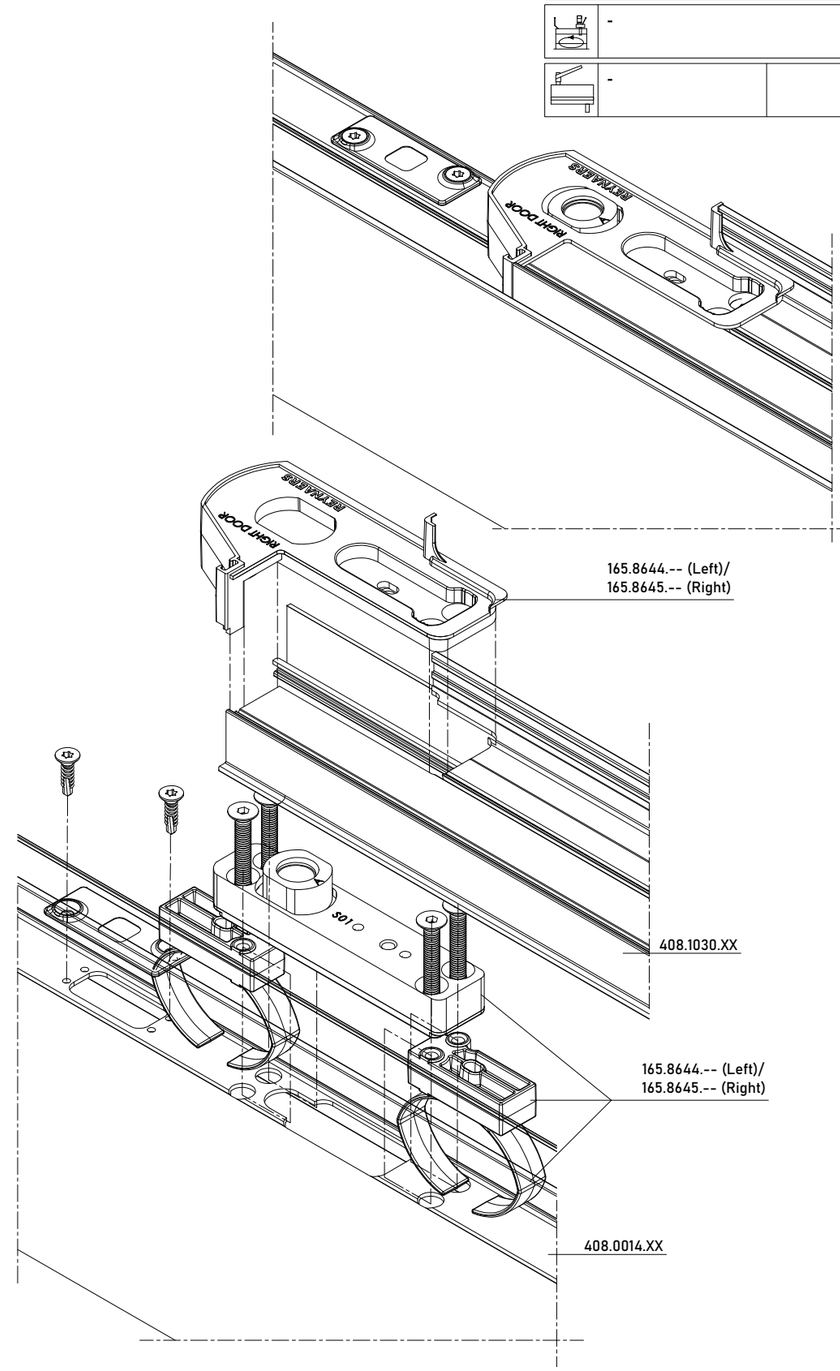

MILLING HINGE MASTERLINE 8-Fu Pivot Door

MILLING FOR PIVOT HINGE

MASTERLINE 8-Fu

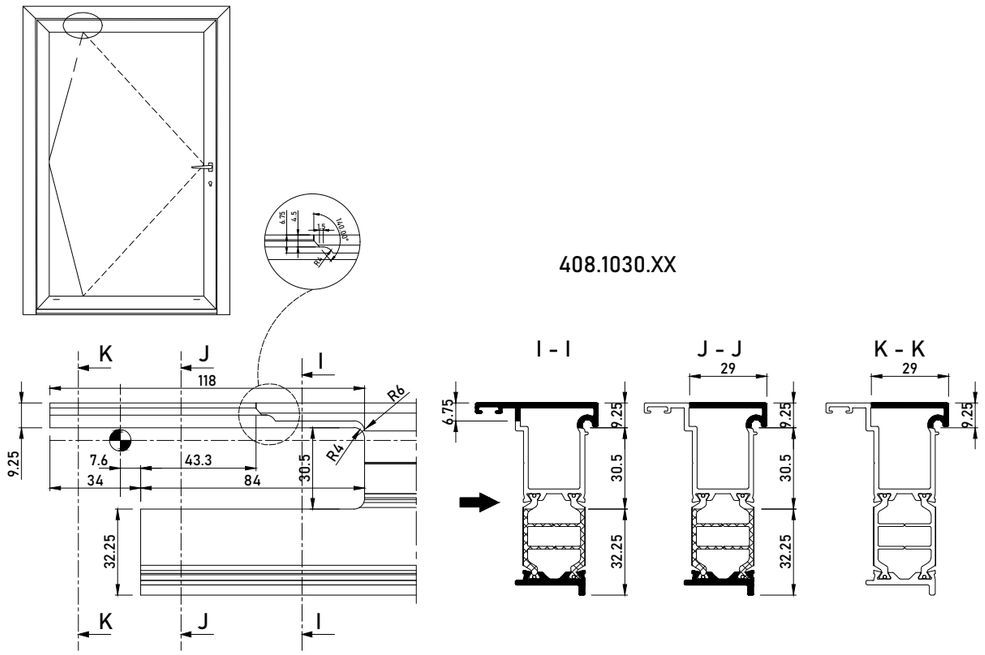

		-	
		-	
	095.C300.00 or 095.N300.00 095.N600.00		
	-		
	-		

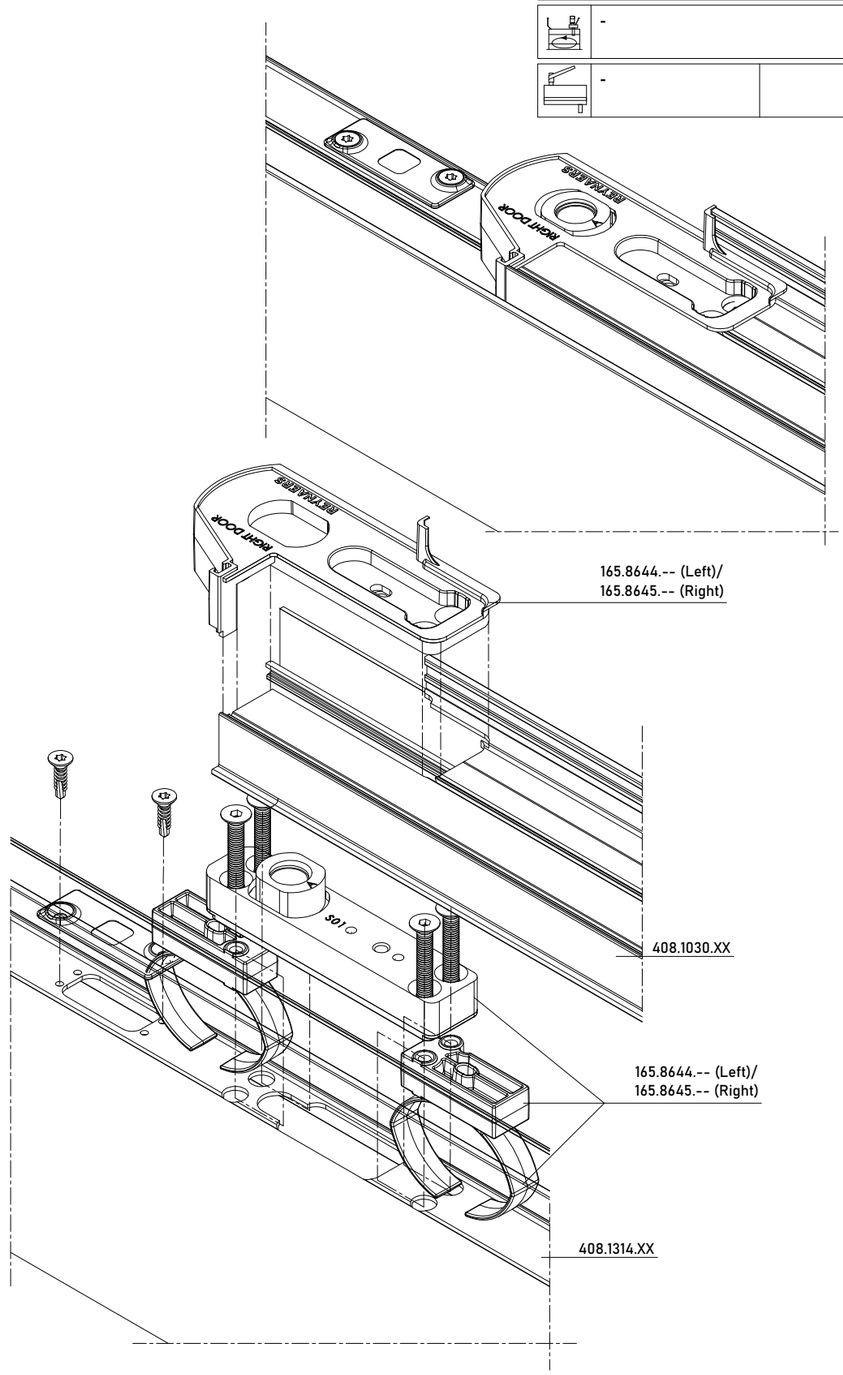

MILLING HINGE MASTERLINE 8-Fu Pivot Door

MILLING FOR PIVOT HINGE

MASTERLINE 8-Fu

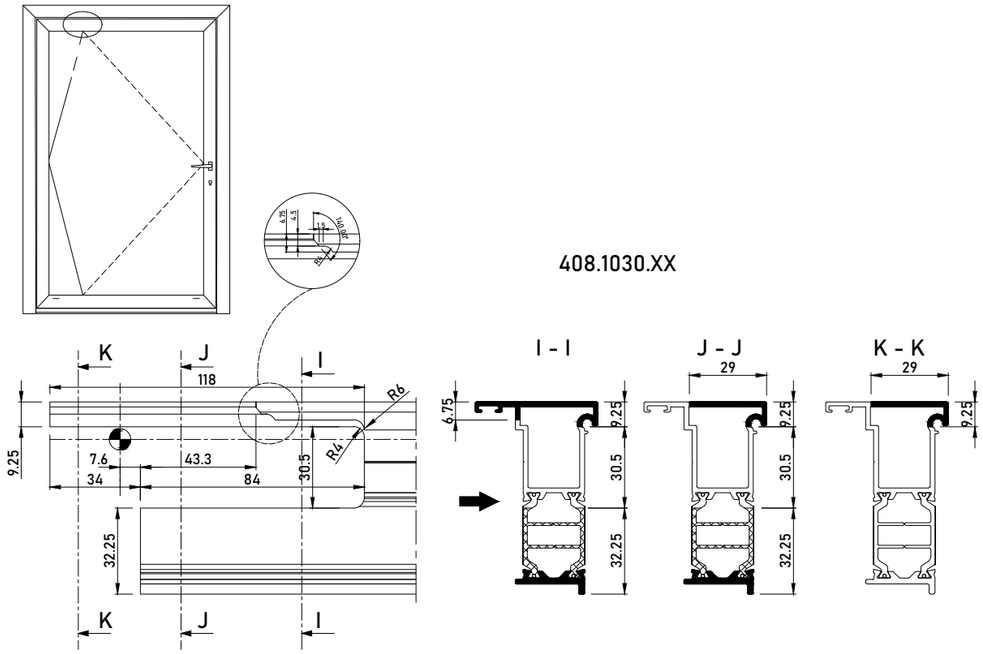

		-	
		-	
	095.C300.00 or 095.N300.00 095.N600.00		
	-		
	-		

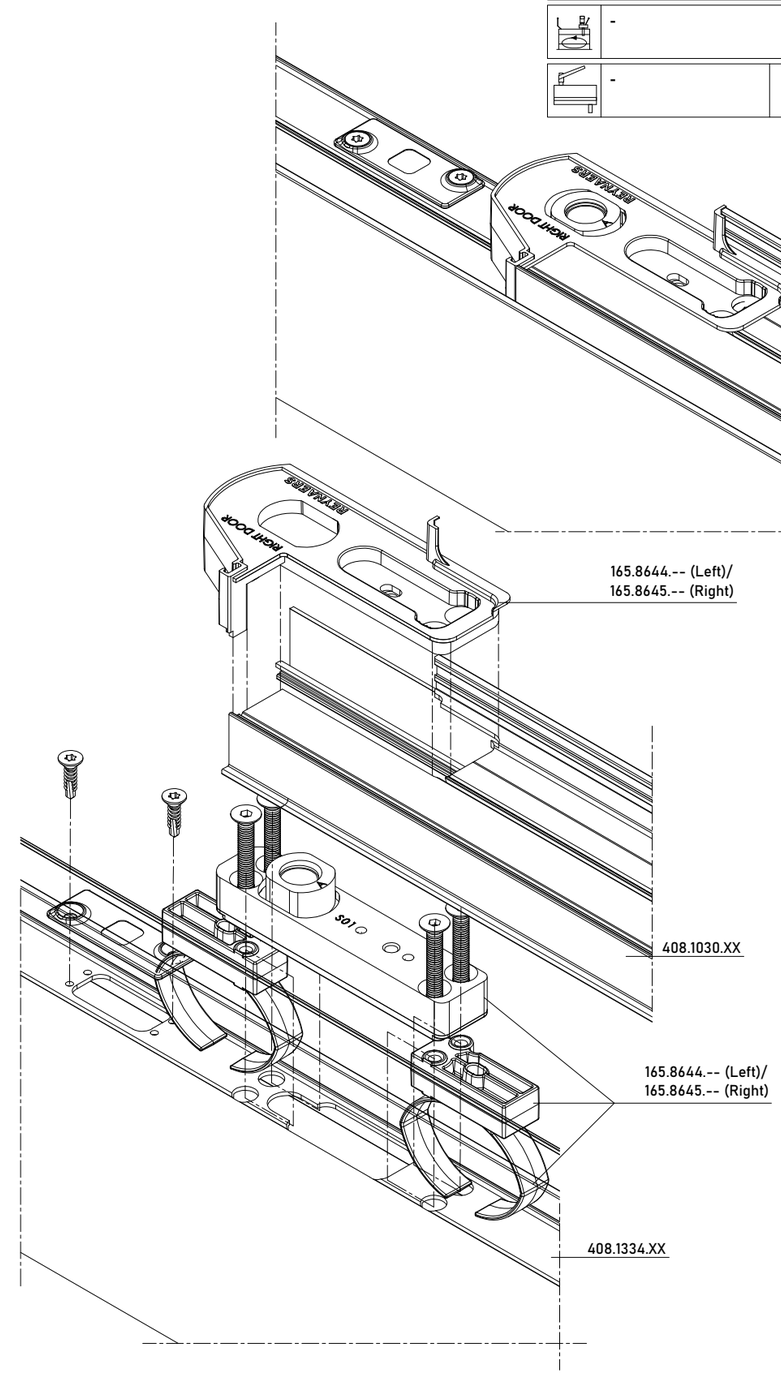

MILLING HINGE MASTERLINE 8-Fu Pivot Door

MILLING FOR PIVOT HINGE

MASTERLINE 8-Fu

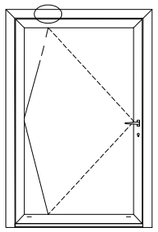

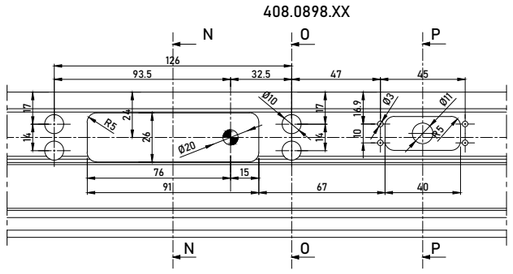

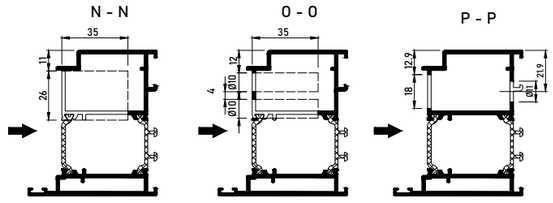

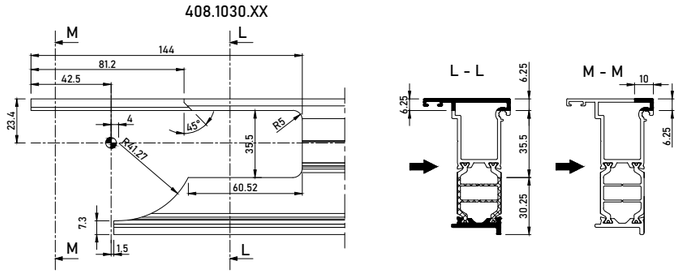

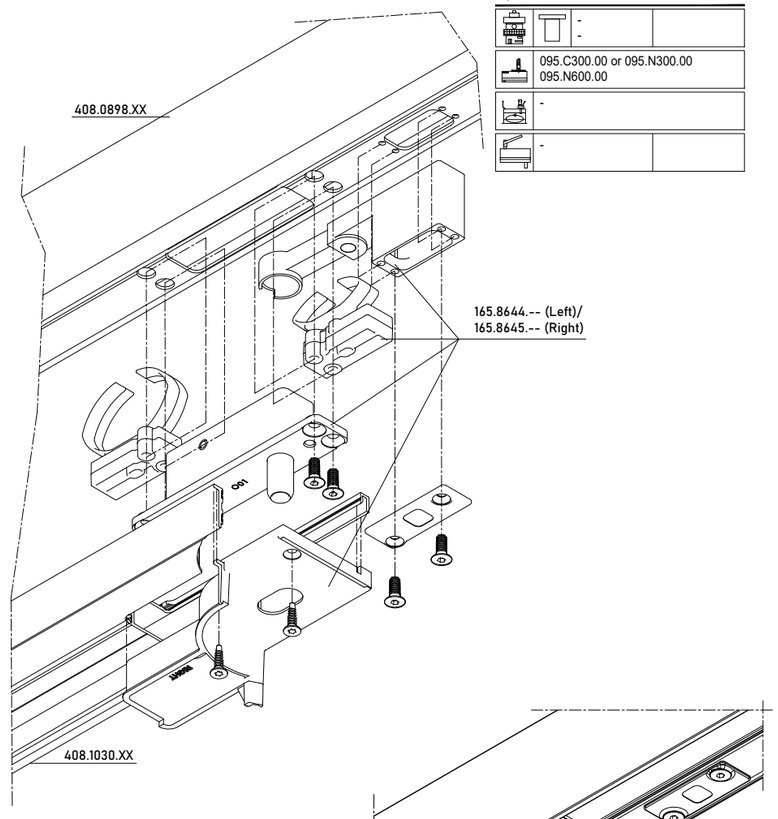

	-	-
	095.C300.00 or 095.N300.00	095.N600.00
	-	
	-	

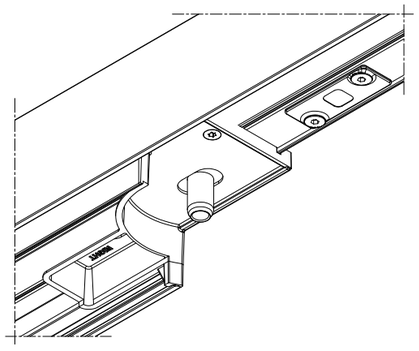

MILLING MOTOR MONORAIL OUTSIDE GLAZING

MOTOR MILLING TOP PROFILE ACCESSORIES

MasterPatio

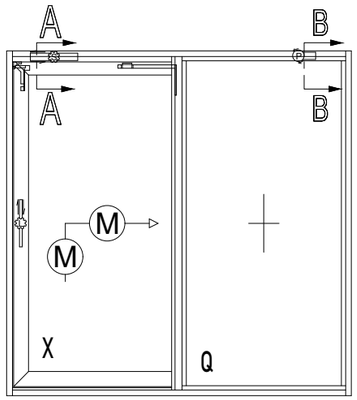

MONORAIL OG

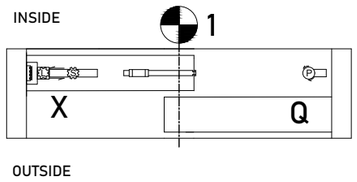

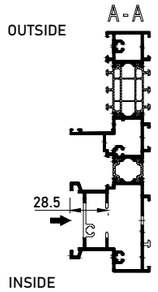

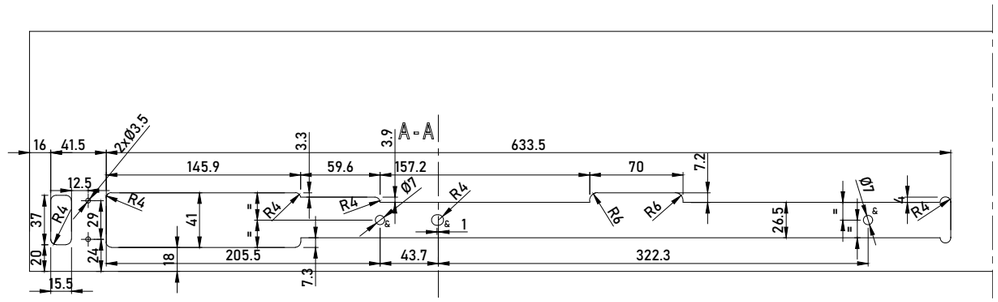

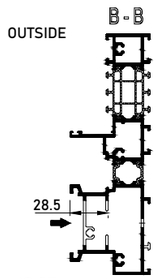

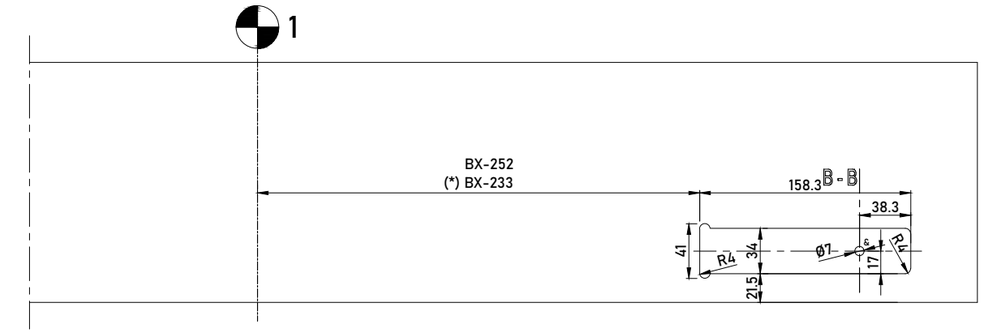

(*)

SMALLE CHICANE MOGELIJK (406.0330.XX)
CHICANE ETROITE POSSIBLE (406.0330.XX)
SLIM CHICANE POSSIBLE (406.0330.XX)
SCHMALE SCHIKANE MÖGLICH (406.0330.XX)

062.7308.-- VERWIJDER GROEF DETAIL VOOR VLAKKE BEVESTIGING
062.7308.-- ENLEVER LE DÉTAIL GORGE POUR LA FIXATION À PLAT
062.7308.-- REMOVE GROOVE DETAIL FOR FLUSH FIXATION
062.7308.-- ENTFERNEN SIE DIE RILLE DETAIL FÜR DIE FLACHBEFESTIGUNG

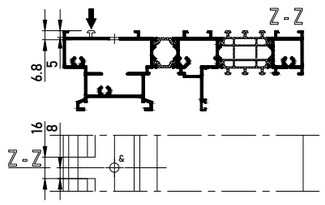

MILLING MOTOR MONORAIL OUTSIDE GLAZING

MOTOR MILLING TOP PROFILE ACCESSORIES

MasterPatio

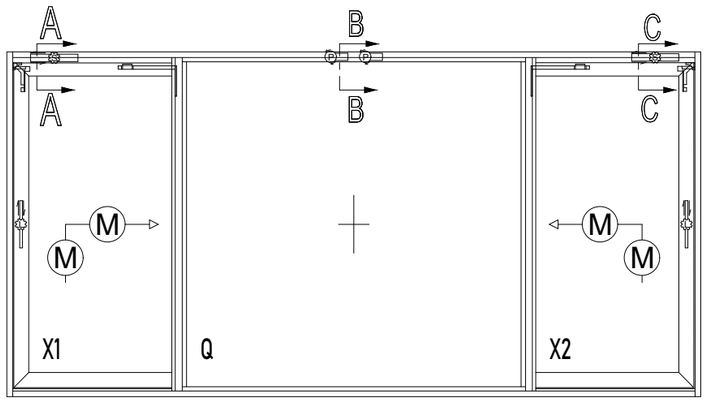

MONORAIL OG

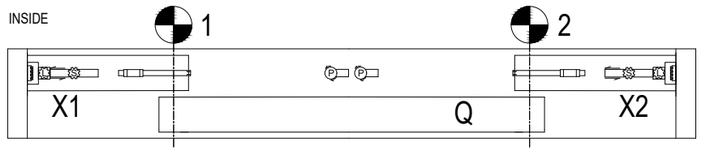

(*)

SMALLE CHICANE MOGELIJK (406.0330.XX)
CHICANE ETROITE POSSIBLE (406.0330.XX)
SLIM CHICANE POSSIBLE (406.0330.XX)
SCHMALE SCHIKANE MÖGLICH (406.0330.XX)

062.7308.-- VERWIJDER GROEF DETAIL VOOR VLAKKE BEVESTIGING
062.7308.-- ENLEVER LE DÉTAIL GORGE POUR LA FIXATION À PLAT
062.7308.-- REMOVE GROOVE DETAIL FOR FLUSH FIXATION
062.7308.-- ENTFERNEN SIE DIE RILLE DETAIL FÜR DIE FLACHBEFESTIGUNG

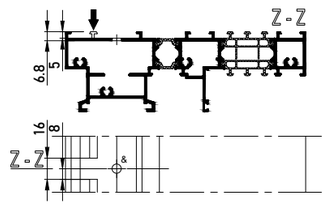

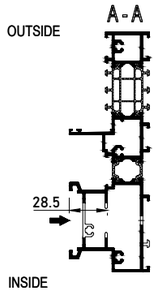

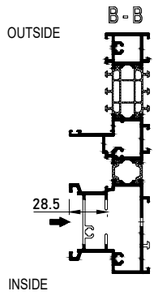

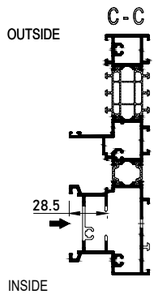

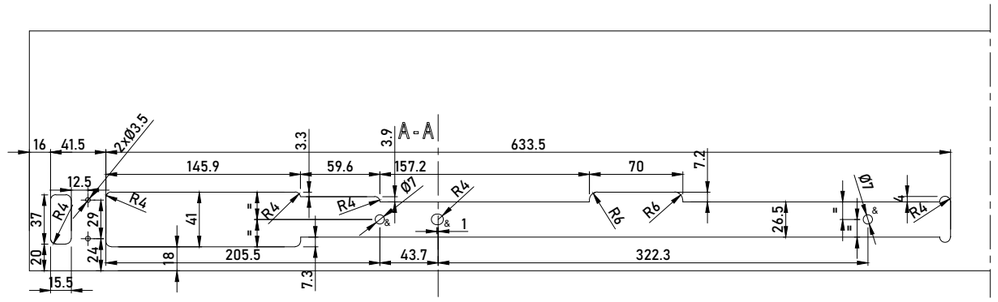

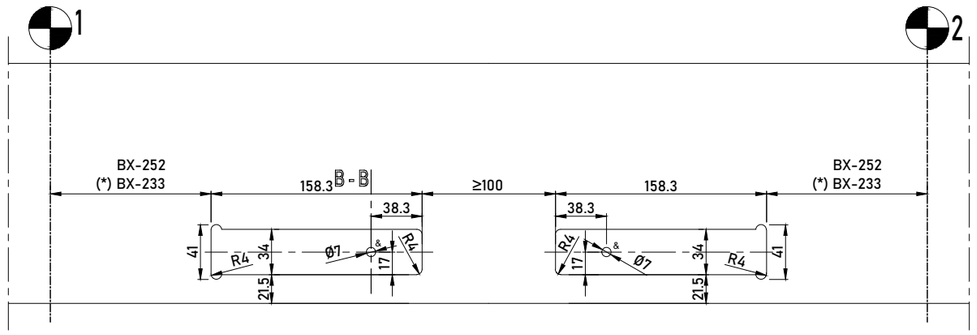

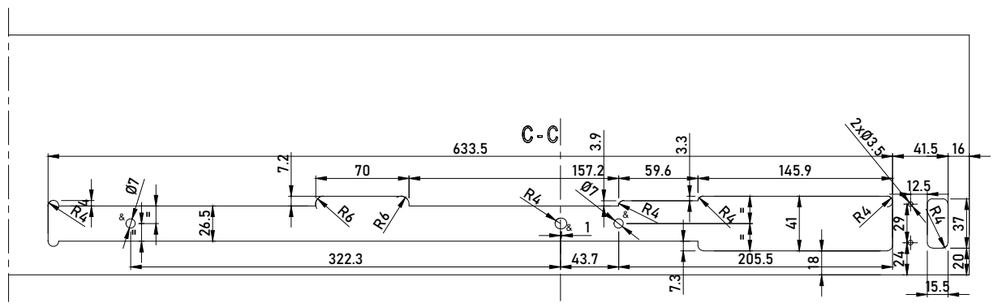

MILLING MOTOR MONORAIL OUTSIDE GLAZING

MOTOR MILLING TOP PROFILE ACCESSORIES

MasterPatio

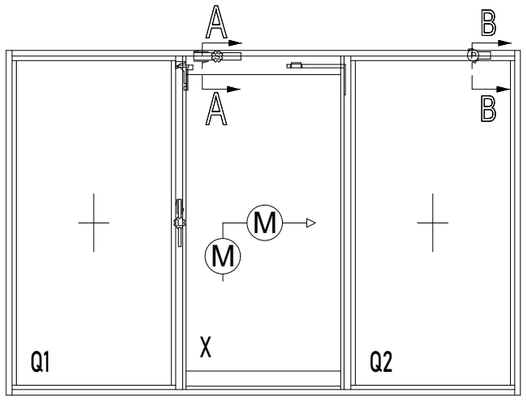

MONORAIL OG

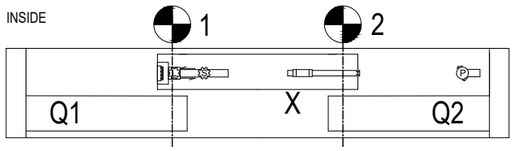

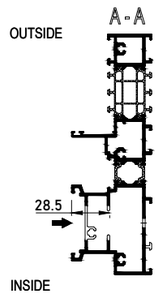

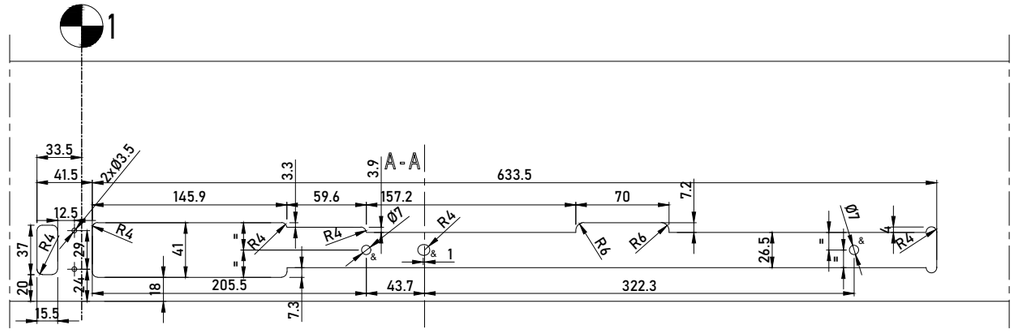

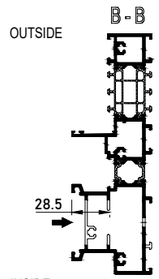

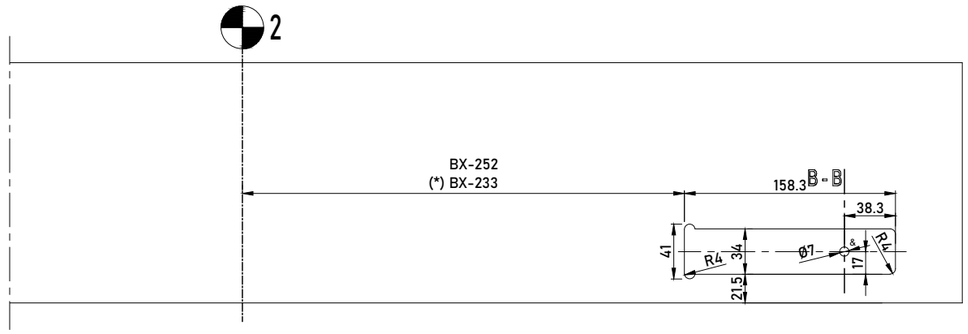

(*)

SMALLE CHICANE MOGELIJK (406.0330.XX)
CHICANE ETROITE POSSIBLE (406.0330.XX)
SLIM CHICANE POSSIBLE (406.0330.XX)
SCHMALE SCHIKANE MÖGLICH (406.0330.XX)

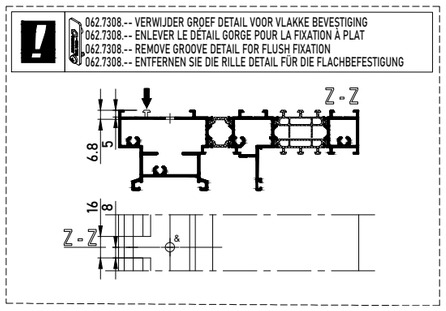

MILLING MOTOR MONORAIL OUTSIDE GLAZING

MOTOR MILLING TOP PROFILE ACCESSORIES

MasterPatio

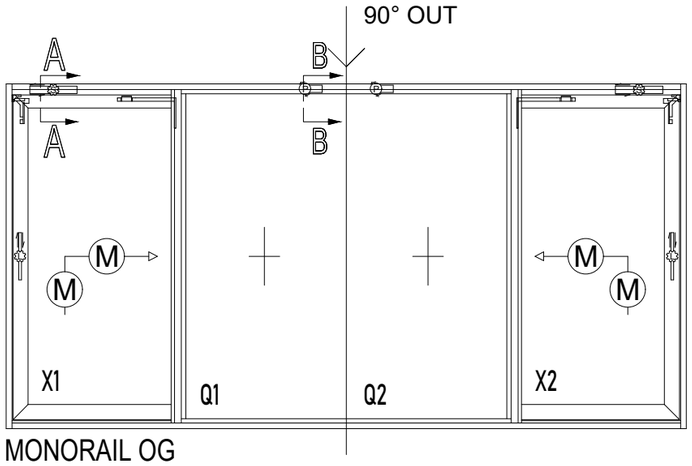

MONORAIL OG

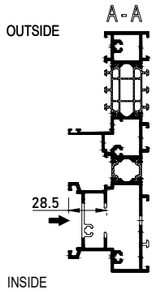

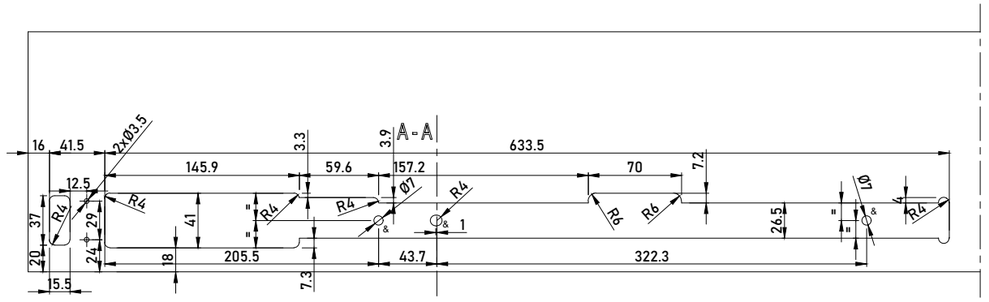

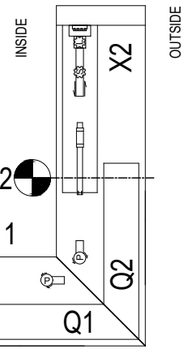

OUTSIDE

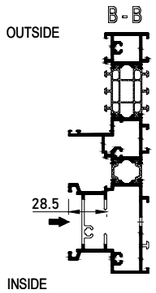

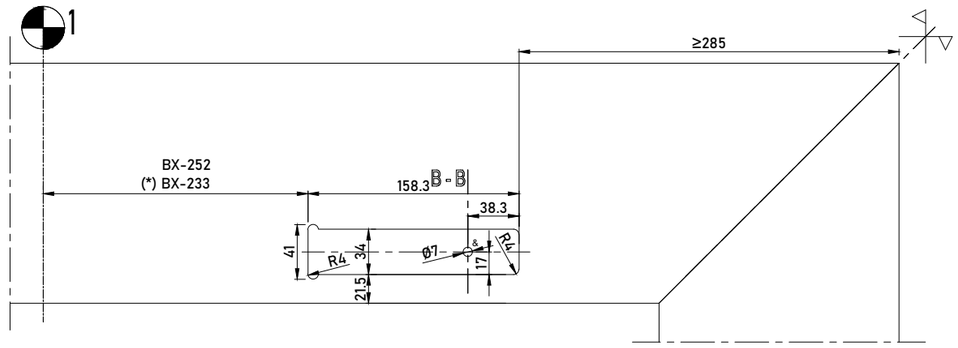

(*)

SMALLE CHICANE MOGELIJK (406.0330.XX) CHICANE ETROITE POSSIBLE (406.0330.XX) SLIM CHICANE POSSIBLE (406.0330.XX) SCHMALE SCHIKANE MÖGLICH (406.0330.XX)

062.7308.-- VERWIJDER GROEF DETAIL VOOR VLAKKE BEVESTIGING
062.7308.-- ENLEVER LE DÉTAIL GORGE POUR LA FIXATION À PLAT
062.7308.-- REMOVE GROOVE DETAIL FOR FLUSH FIXATION
062.7308.-- ENTFERNEN SIE DIE RILLE DETAIL FÜR DIE FLACHBEFESTIGUNG

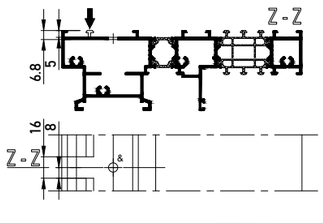

MILLING MOTOR MONORAIL OUTSIDE GLAZING

MOTOR MILLING TOP PROFILE ACCESSORIES

MasterPatio

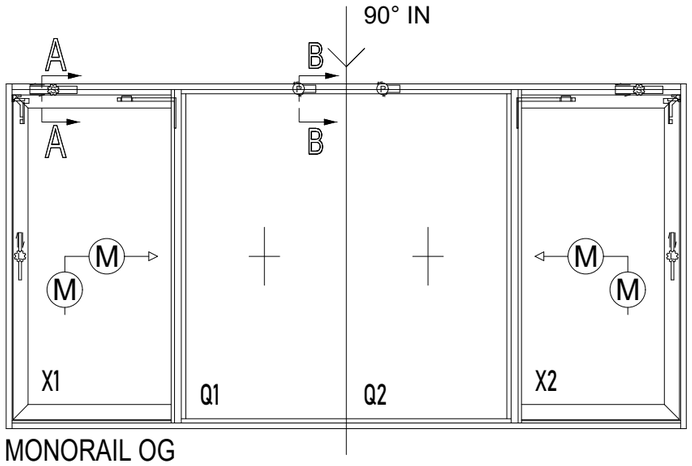

MONORAIL OG

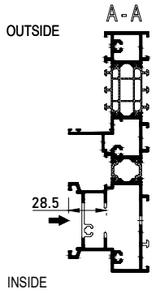

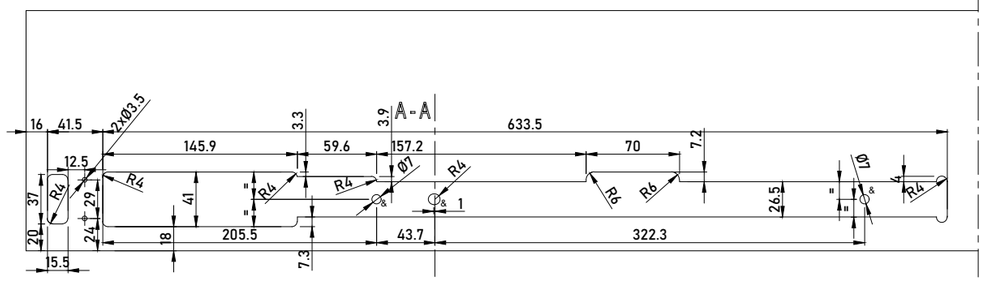

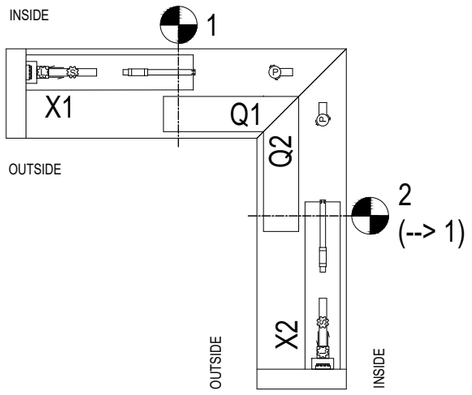

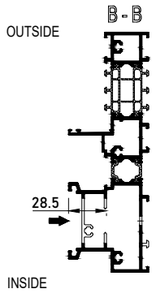

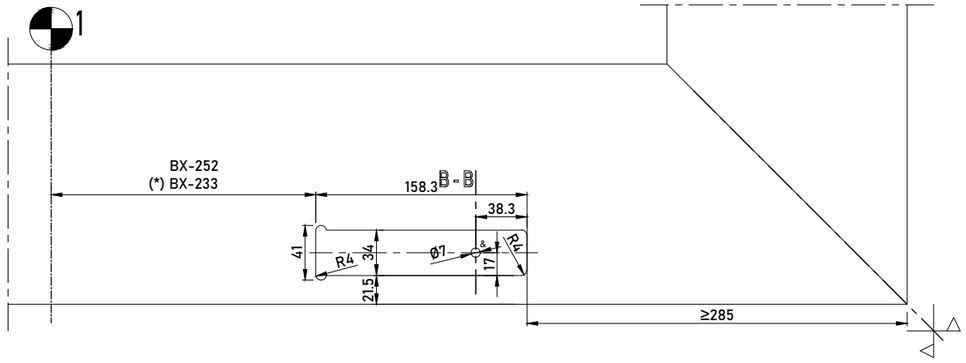

(*)

SMALLE CHICANE MOGELIJK (406.0330.XX)
CHICANE ETROITE POSSIBLE (406.0330.XX)
SLIM CHICANE POSSIBLE (406.0330.XX)
SCHMALE SCHIKANE MÖGLICH (406.0330.XX)

062.7308.-- VERWIJDER GROEF DETAIL VOOR VLAKKE BEVESTIGING
062.7308.-- ENLEVER LE DÉTAIL GORGE POUR LA FIXATION À PLAT
062.7308.-- REMOVE GROOVE DETAIL FOR FLUSH FIXATION
062.7308.-- ENTFERNEN SIE DIE RILLE DETAIL FÜR DIE FLACHBEFESTIGUNG

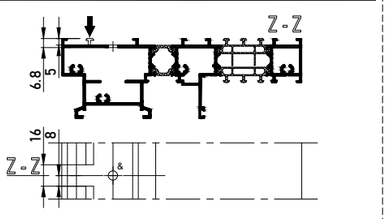

MILLING MOTOR ACCESSORIES PIVOT DOOR XL

CABLING VENT | 408.1790.XX

MASTERLINE 8-Fu, OPENING DOORS

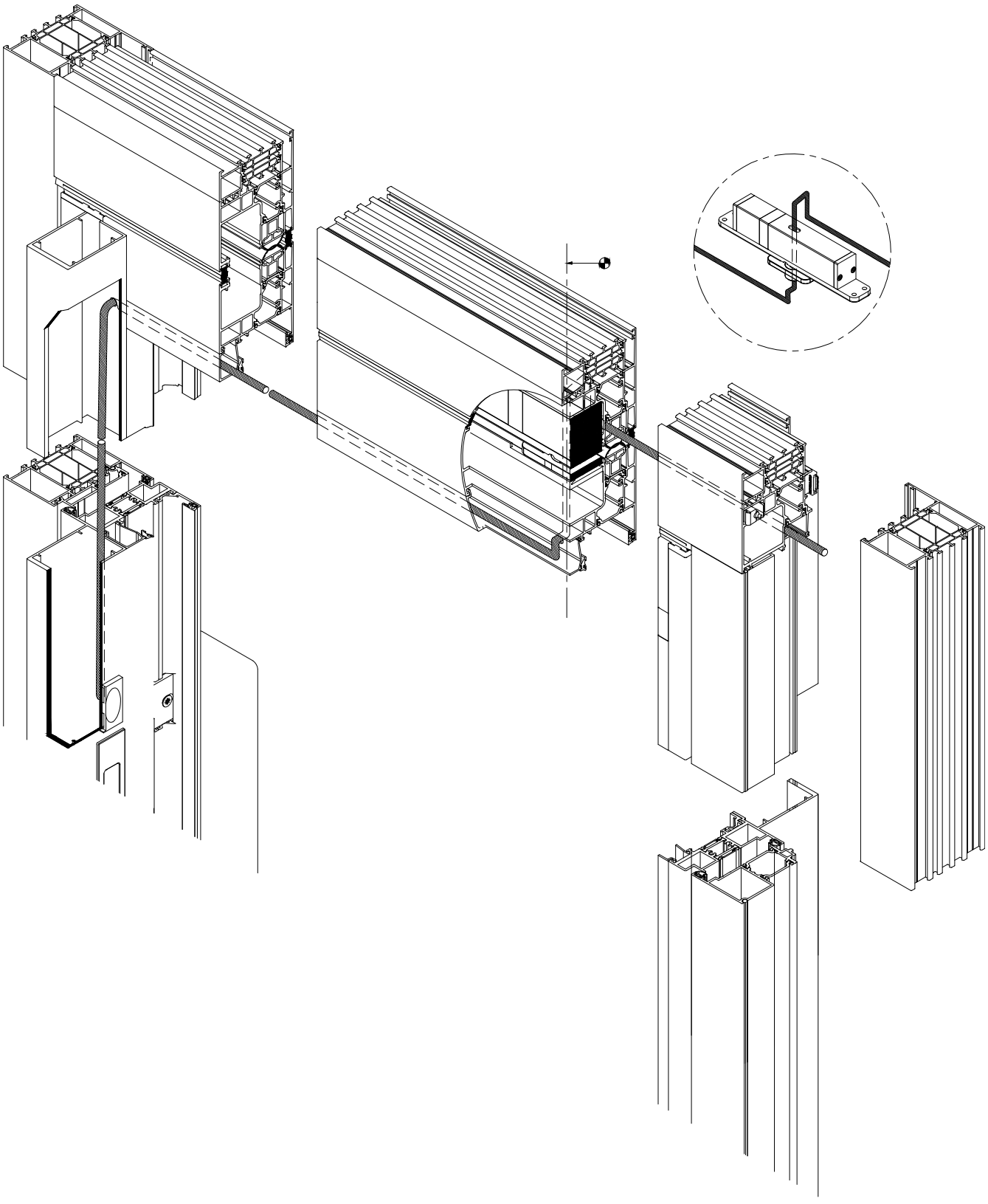

MILLING MOTOR ACCESSORIES PIVOT DOOR XL

CABLING VENT | 408.1790.XX

MASTERLINE 8-Fu, OPENING DOORS

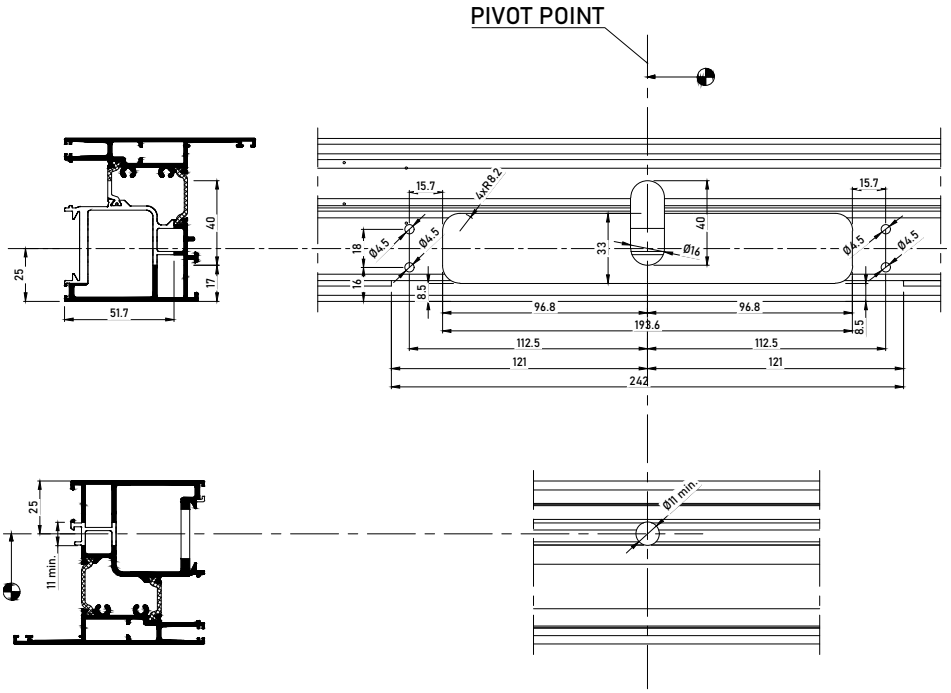

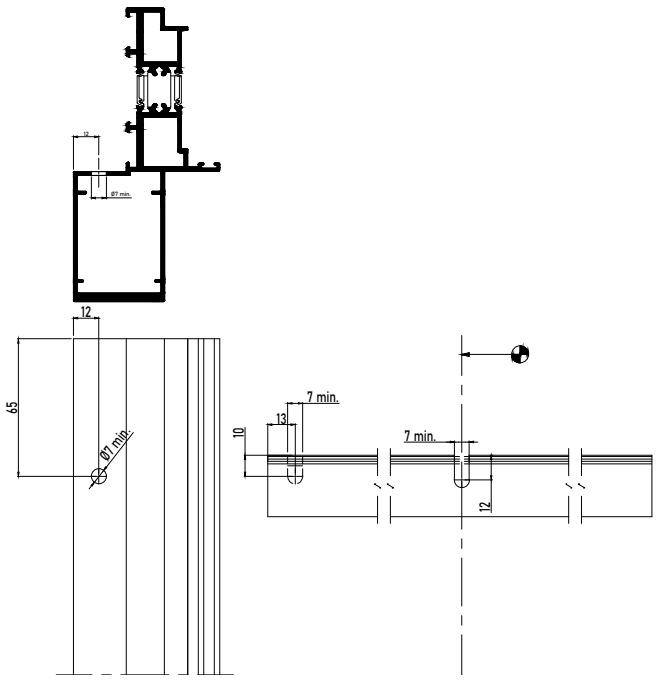

OVERVIEW END PIECES BALCONY DOOR 2024

ASSEMBLY END PIECES

MASTERLINE 8-Fu

PLAATSING EINDSTUKKEN
FINITION PIECES FINALES
SEALING END PIECES
MONTAGE ENDKAPPEN

169.7030.04 (7030) en/et/and/und 169.8380.04 (8380)
+
169.6871.04 (6871) of/ou/or/oder 169.6874.04 (6874)

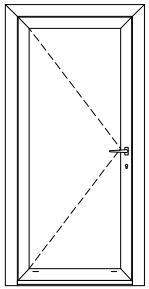

7030
8380

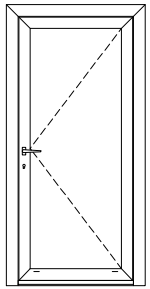

7030
8380

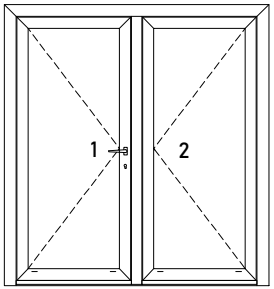

7030
8380
6871

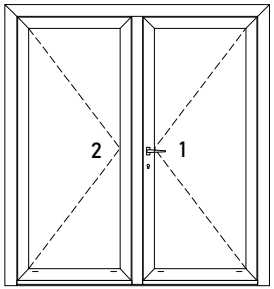

7030
8380
6874

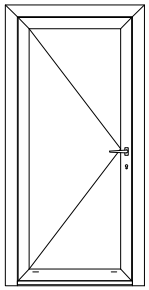

7030
8380

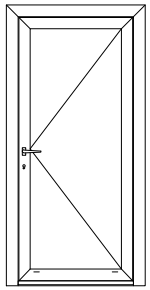

7030
8380

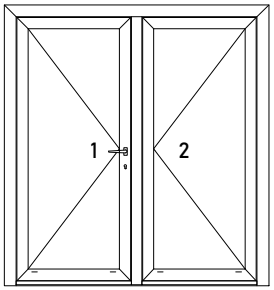

7030
8380
6874

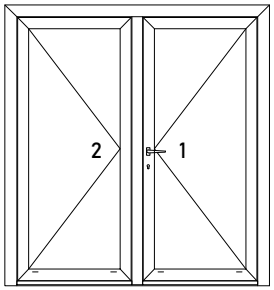

7030
8380
6871

OVERVIEW END PIECES BALCONY DOOR 2024

ASSEMBLY END PIECES

MASTERLINE 8-Fu

PLAATSING EINDSTUKKEN
FINITION PIECES FINALES
SEALING END PIECES
MONTAGE ENDKAPPEN

169.7500.SY + 169.8374.SY (7500) of/ou/or/oder
169.7510.SY +169.8374.SY (7510)

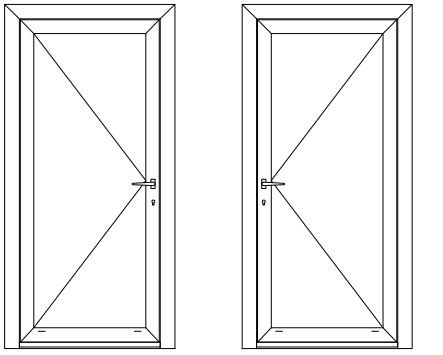

7500 7510 7500 7510

SILL DETAIL

SEALING SILL/THRESHOLD

MASTERLINE 8-Fu

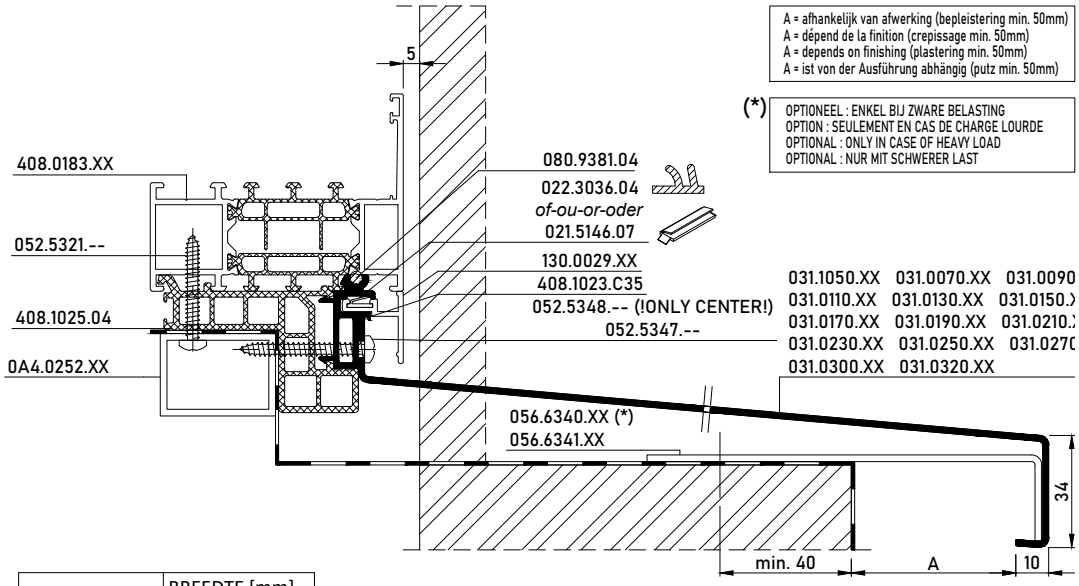

DORPEL BAVETTE SILL FENSTERBANK	BREEDTE [mm] LARGEUR [mm] WIDTH [mm] BREITE [mm]
031.1050.XX	50
031.0070.XX	70
031.0090.XX	90
031.0110.XX	110
031.0130.XX	130
031.0150.XX	150
031.0170.XX	170
031.0190.XX	190
031.0210.XX	210
031.0230.XX	230
031.0250.XX	250
031.0270.XX	270
031.0300.XX	300
031.0320.XX	320

SILL DETAIL

SEALING SILL/THRESHOLD

MASTERLINE 8-Fu

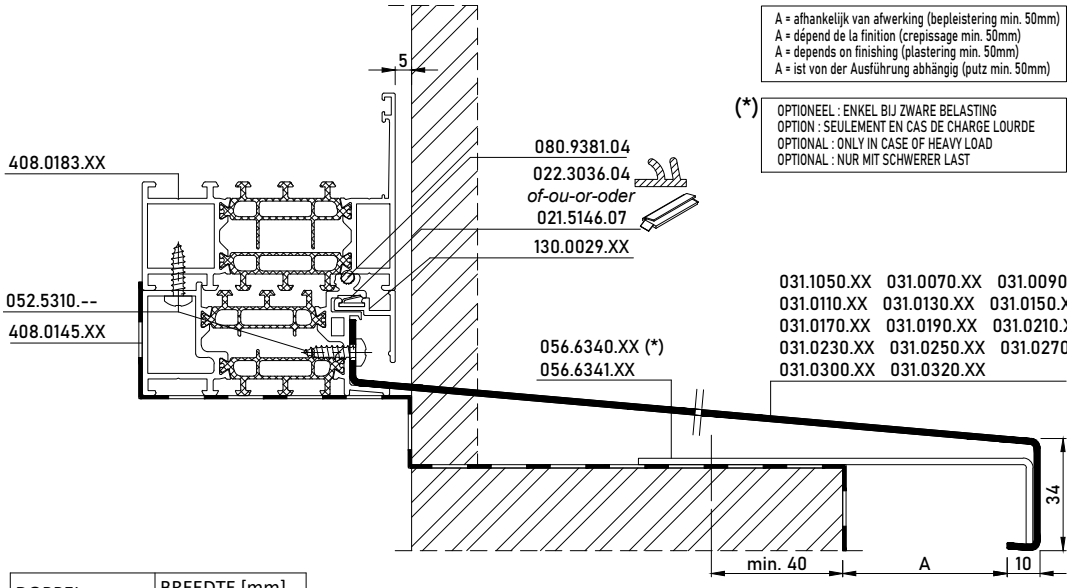

DORPEL BAVETTE SILL FENSTERBANK	BREEDTE [mm] LARGEUR [mm] WIDTH [mm] BREITE [mm]
031.1050.XX	50
031.0070.XX	70
031.0090.XX	90
031.0110.XX	110
031.0130.XX	130
031.0150.XX	150
031.0170.XX	170
031.0190.XX	190
031.0210.XX	210
031.0230.XX	230
031.0250.XX	250
031.0270.XX	270
031.0300.XX	300
031.0320.XX	320

		afm. dimen. d	afm. dimen. L	dimen. Masse k	D
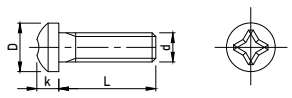 DIN 7985 ISO 7045	050.5065.--	M4	5	3.1	8
	050.5092.--	M4	8	3.1	8
	050.5109.--	M4	12	3.1	8
	050.5066.--	M4	14	2.5	6.5
	050.5019.--	M4	18	3.1	8
	050.5035.--	M4	60	3.1	8
	050.5010.--	M5	6	3.8	10
	050.5110.--	M5	8	3.8	10
	050.5106.--	M5	10	3.8	9.8
	050.5016.--	M5	12	3.8	10
	050.5013.--	M5	16	3.8	10
	050.5014.--	M5	20	3.8	10
	050.5111.--	M6	8	4.6	12
	050.5116.--	M6	16	4.6	12
	050.5112.--	M6	25	4.6	12
	050.5113.--	M6	115	4.6	10
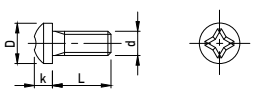 DIN 7985 ISO 7045	050.5118.--	M5	6	3.8	10
	050.5117.--	M5	8	3.8	10
	050.5119.--	M5	12	3.8	10
	050.5026.--	M5	14	3.8	10
	050.5020.--	M5	16	3.8	9.5
	SCHROEF MET BORGINGSVERF VIS AVEC COLLE DE BLOCAGE SCREW WITH LOCK PAINT SCHRAUBE MIT SICHERUNGSFARBE				
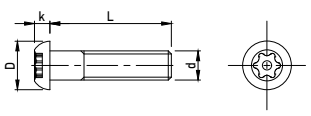 TORX + pin ISO 14583	030.5039.--	M6	20	3.2	10
	030.5040.--	M6	25	3.2	10
	030.5041.--	M10	40	5.2	17.5
	BEVEILIGINGSCHROEF SÉCURITÉ VIS SECURITY SCREW SICHERCHEITSSCHRAUBE				

		afm. dimen. L	dimen. Masse k	D
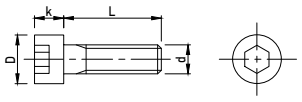	050.5025.--	20	4	7
	050.5071.--*	12	5	8.5
	050.5072.--	35	5	8.5
	050.5029.--	16	6	10
	050.5031.--	20	6	10
	050.5180.--	25	6	10
	050.5032.--	30	6	10
	050.5033.--	35	6	10
	050.5034.--	40	6	10
	050.5021.--	45	6	10
	050.5030.--	50	6	10
	050.5022.--	60	6	10
	050.5023.--	65	6	10
	050.5024.--	70	6	10
	050.5260.--	20	8	13
DIN 912 ISO 4762	* used in assembly, sales = no			

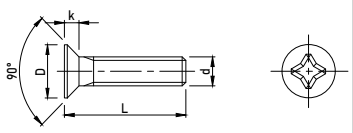	050.5002.--	8	2.2	7.5
	050.5170.--	10	2.2	7.5
	050.5003.--	12	2.2	7.5
	050.5018.--	16	2.2	7.5
	050.5077.--	25	2.2	7.3
	050.5078.--	30	2.2	7.3
	050.5132.--	6	2.5	11
	050.5015.--	8	2.5	9.2
	050.5130.--	10	2.5	9.2
	050.5131.--	12	2.5	9.2
	050.5161.--	16	2.5	9.2
	050.5162.--	18	2.5	9.2
	050.5011.--	20	2.5	9.2
	050.5001.--	25	2.5	9.2
	050.5017.--	30	2.5	9.2
	050.5047.--	40	2.5	9.2
	050.5081.--	45	2.5	9.2
	050.5048.--	50	2.5	9.2
	050.5005.--	55	2.5	9.2
	050.5004.--	60	2.5	9.2
	050.5073.--	65	2.5	9.2
DIN 965 ISO 7046	* used in assembly, sales = no			

		afm. dimen. d	afm. dimen. L	dimen. Masse k	D
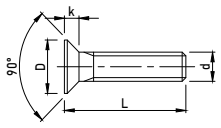  DIN 965 ISO 7046	050.5082.--	M5	70	2.5	9.2
	050.5074.--	M5	75	2.5	9.2
	050.5083.--	M5	80	2.5	9.2
	050.5086.--	M5	85	2.7	9.3
	050.5084.--	M5	90	2.5	9.2
	050.5008.--*	M5	95	2.5	9.2
	050.5036.--	M5	100	2.5	9.2
	050.5085.--	M5	110	2.5	9.2
	050.5139.--	M6	8	3	11
	050.5140.--	M6	10	3	11
	050.5053.--	M6	12	3	11
	050.5060.--	M6	16	4	11
	050.5050.--	M6	25	3	11
	050.5051.--	M6	30	3	11
	050.5052.--	M6	35	3	11
	050.5055.--	M6	45	3	11
	050.5126.--	M6	60	3.3	11.3
	050.5121.--	M6	65	3	11
	050.5141.--	M6	70	3	11
	050.5122.--	M6	75	3	11
	050.5142.--	M6	80	3	9.2
	050.5143.--	M6	85	3.3	11.3
	050.5123.--	M6	90	3	11
	050.5124.--	M6	100	3	11
	050.5125.--	M6	110	3.3	11.3
	050.5075.--	M8	20	4	14.5
	* used in assembly, sales = no				
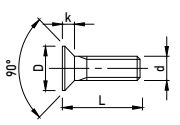  DIN 965 ISO 7046	050.5000.--	M5	10	2.5	9.2
	050.5009.--	M5	16	2.5	9.2
	050.5012.--	M5	12	2.5	9.2
	050.5080.--	M5	40	2.5	9.2
	SCHROEF MET BORGINGSVERF VIS AVEC COLLE DE BLOCAGE SCREW WITH LOCK PAINT SCHRAUBE MIT SICHERUNGSFARBE				
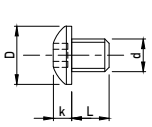  ISO 7380	050.5229.--*	M3	6	1.7	5.7
	050.5230.--	M8	10	4.4	14
	* used in assembly, sales = no				

OVERVIEW FIXATIONS

FIXINGS

CP 130, CP 130-LS, CP 155, CP 155-LS, CS 77, CW 50, CW 60, FIXATIONS, MASTERLINE 8-Fu, MasterPatio

			afm. dimen. d	afm. dimen. L	dimen. Masse k	D
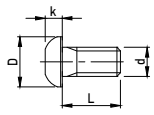	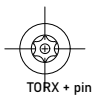 TORX + pin ISO 7380	050.5114.-- 050.5115.-- BEVEILIGINGSCHROEF SÉCURITÉ VIS SECURITY SCREW SICHERCHEITSSCHRAUBE	M6 M6	12 30	3.5 3.5	10.35 10.35
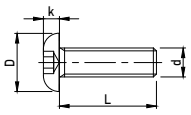	 ISO 7380	030.5042.-- 030.5043.-- 030.5044.--	M6 M6 M10	20 25 40	3.3 3.3 5.5	12 12 20
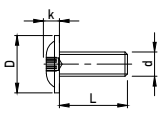	 TORX ISO 7380-f	050.5227.--	M5	14	2.7	11.8
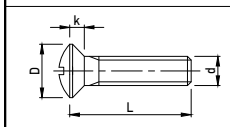	 DIN 966 ISO 7047	050.5191.--	M6	45	3	11
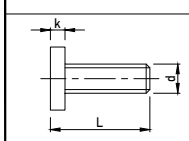	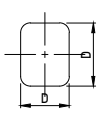 ISO 2768-m	050.5381.--	M6	16	3	10x14
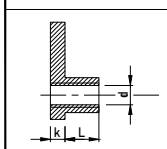	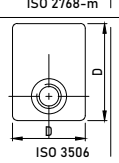 ISO 3506	050.5398.--	M5	7	3	15x20
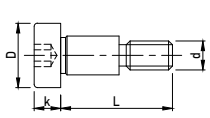	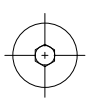 ISO 7379	050.5196.-- 050.5195.--	M6 M8	23 33	5.5 7	13.27 16
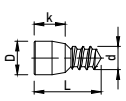	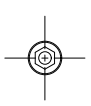 ISO 2768-m	050.5153.--	4.8	13.8	6.4	6.9

OVERVIEW FIXATIONS

FIXINGS

CP 130, CP 130-LS, CP 155, CP 155-LS, CS 77, CW 50, CW 60, FIXATIONS, MASTERLINE 8-Fu, MasterPatio

		d	afm. dimen. L	Masse dimen. k	D
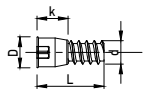 TORX	030.5047.--	4.8	13.8	6.4	6.4
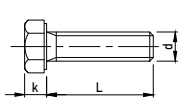 DIN 933 ISO 4017	050.5270.--	M4	6	2.8	7
	050.5271.--	M4	10	2.8	7
	050.5202.--*	M6	12	4	10
	050.5391.--	M6	20	4	10
	050.5204.--	M10	22	6.4	17
	050.5200.--	M10	40	6.4	17
	050.5203.--	M10	60	6.4	17
	050.5205.--	M10	70	6.4	17
	050.5201.--	M10	80	6.4	17
	* used in assembly, sales = no				
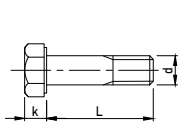 DIN 931 ISO 4014	050.5388.--	M10	100	6.4	17
	050.5389.--	M10	130	6.4	17
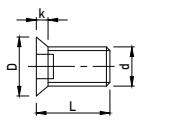 DIN 7991 ISO 10642	050.5042.--*	M5	10	2.8	10
	050.5040.--	M6	10	4	12
	050.5041.--	M6	12	3.3	12
	050.5090.59				
	050.5093.--	M8	8	2.4	12
	050.5091.--	M8	10	2.4	12
	050.5094.--	M8	15	2.4	12
	* used in assembly, sales = no				
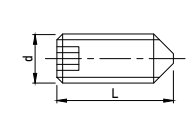 DIN 913 ISO 4026	051.5257.--	M5	12		
	051.5262.--	M6	8		
	051.5263.--*	M6	12		
	051.5277.--*	M6	16		
	051.5264.--*	M6	20		
	051.5291.--	M8	8		
	051.5292.--	M8	12		
	051.5299.--*	M12	12		
	* used in assembly, sales = no				

		afm. dimen. d	afm. dimen. L	dimen. Masse k	D
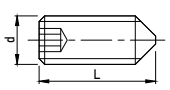 DIN 914 ISO 4027	051.5265.--	M4	4		
	051.5273.--	M4	5		
	051.5279.--	M4	10		
	151.5279.--	M4	12		
	051.5272.--	M5	6		
	051.5252.--	M5	12		
	051.5274.--	M6	6		
	051.5278.--	M6	16		
	051.5270.--	M8	8		
	051.5271.--	M6	10		
	051.5269.--	M8	12		
	*used in assembly, sales = no				
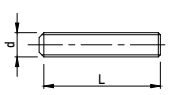 DIN 914 ISO 4027	051.5241.--	M5	25		
	051.5242.--	M5	35		
	051.5243.--	M5	50		
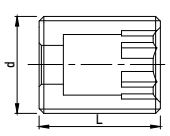 ISO 2768-m	051.5309.17*	M20	25		
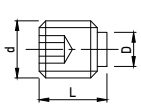 DIN 915 ISO 4028	051.5254.--	M5	6		3.5
	051.5255.--	M5	12		3.5
	051.5253.--	M5	35		3.8
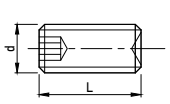 DIN 916 ISO 4029	051.5284.--	M4	5		
	051.5266.--	M4	6		
	051.5282.--	M4	8		
	051.5281.--	M4	10		
	051.5240.--	M5	6		
	051.5285.--	M5	8		
	051.5250.--	M5	10		
	051.5280.--	M5	12		
	051.5290.--	M8	10		

		d	afm. dimen. L	dimen. Masse k	D
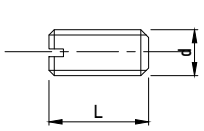  DIN 438 ISO 7436	051.5100.--	M4	6		
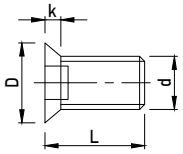 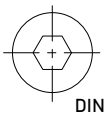 DIN 7991 ISO 10642	050.5076.-- SCHROEF MET BORGINGSVERF VIS AVEC COLLE DE BLOCAGE SCREW WITH LOCK PAINT SCHRAUBE MIT SICHERUNGSFARBE	M4	6	2.2	7.5
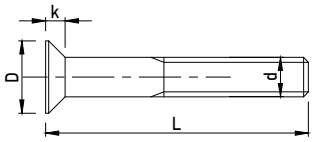 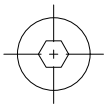 DIN 7991	050.5054.--	M6	40	3	11
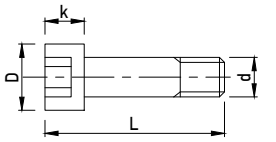 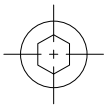 DIN 7984	050.5043.-- 050.5045.--	M6 M6	29 54	4 4	10 10
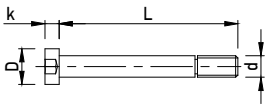 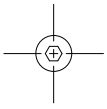 DIN 7984	050.5045.-- SCHROEF MET BORGINGSVERF VIS AVEC COLLE DE BLOCAGE SCREW WITH LOCK PAINT SCHRAUBE MIT SICHERUNGSFARBE	M6	50	4	10
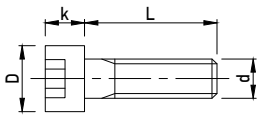 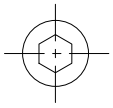 DIN 912 ISO 4762	050.5028.-- 050.5039.-- SCHROEF MET BORGINGSVERF VIS AVEC COLLE DE BLOCAGE SCREW WITH LOCK PAINT SCHRAUBE MIT SICHERUNGSFARBE	M6 M6	16 18	6 6	10 10

		d	afm. dimen. L	dimen. Masse k	D
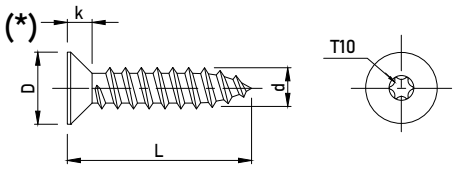 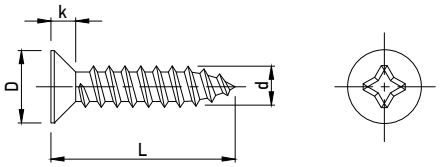 DIN 7982 ISO 7050	050.5108.--(*)	3	6	2.3	5
	052.5308.--(*)	3.5	13	2.1	6.8
	052.5355.--	3.5	19	2.1	6.8
	152.5310.--	3.5	32	3.3	7.3
	052.5309.--	3.9	19	2.3	7.5
	052.5201.--	3.9	25	2.3	7.5
	052.5345.--	4.2	9.5	2.5	8.1
	052.5312.--	4.2	13	2.5	8.1
	052.5311.--	4.2	16	2.5	8.1
	052.5316.--	4.2	19	2.5	8.1
	052.5327.--	4.2	25	2.5	8.1
	052.5313.--	4.2	32	2.5	8.1
	052.5318.--	4.2	38	2.5	8.1
	052.5329.--	4.2	50	2.5	8.1
	052.5328.--	4.2	60	2.5	8.1
	052.5322.--	4.2	70	2.5	8.1
	052.5332.--	4.8	13	3	9.5
	052.5331.--	4.8	19	3	9.5
	052.5333.--	4.8	25	3	9.5
	052.5336.--	4.8	32	3	9.5
	052.5337.--	4.8	38	3	9.5
	052.5335.--	4.8	45	3	9.5
	052.5338.--	4.8	50	3	9.5
	052.5334.--	4.8	70	3	9.5
	052.5339.--	5.5	13	3	9.5
	052.5346.--	5.5	19	3.4	10.8
	052.5380.--	6.3	13	3.8	12.4
	152.5340.--	6.3	25	3.8	12.4
	052.5381.--	6.3	38	3.8	12.4
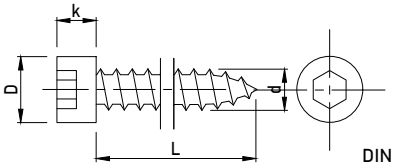 DIN 912 ISO 4762	052.5372.--	6.3	13	6	10
	052.5371.--	6.3	38	6	10
	052.5373.--	6.3	70	6	10
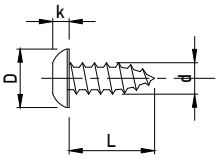 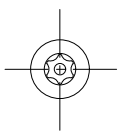 TORX DIN 7981 ISO 3506	052.5307.--	3.5	19	4.5	6.9
	052.6330.--	4.8	13	3.1	9.5
	152.5299.--	4.8	16	3.55	9.5
	152.5301.--	4.8	38	3.55	9.5
	152.5381.--	6.3	38	4.55	12.5

		afm. dimen. d	afm. dimen. L	dimen. Masse k	D
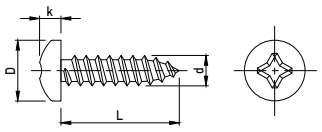 DIN 7981 ISO 7049	052.5320.--	3.5	9.5	2.6	6.9
	052.5200.--	3.9	19	2.8	7.5
	052.5360.--	4.2	9.5	3.05	8.2
	052.5317.--	4.2	13	3.05	8.2
	052.5310.--	4.2	16	3.05	8.2
	052.5347.--	4.2	19	3.05	6.2
	052.5315.--	4.2	25	3.05	8.2
	052.5321.--	4.2	32	3.05	8.2
	052.5314.--	4.2	50	3.05	8.2
	052.5330.--	4.8	13	3.55	9.5
	052.5300.--	4.8	19	3.55	9.5
	052.5301.--	4.8	38	3.55	9.5
	052.5302.--	4.8	50	3.55	9.5
	052.5323.--	4.8	60	3.55	9.5
	052.5306.--	4.8	70	3.55	9.5
	052.5305.--	4.8	80	3.55	9.5
	052.5304.--	4.8	90	3.55	9.5
	052.5348.--				
	052.5349.--				
	052.5344.--	5.5	13	3.95	10.8
	052.5343.--	5.5	25	3.95	10.8
	052.5342.--	5.5	32	3.95	10.8
	052.5341.--	5.5	38	3.95	10.8
	052.5340.--	5.5	45	3.95	10.8
	052.5350.--	6.3	25	4.55	12.5
	052.5351.--	6.3	38	4.55	12.5
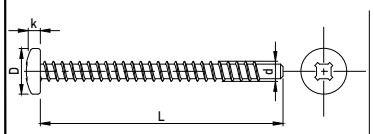	052.5325.--	4.2	50	3	9.4
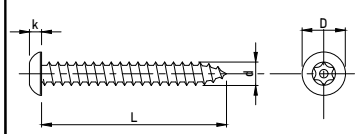 TORX + pin ISO 3506-1 BEVEILIGINGSCHROEF SÉCURITÉ VIS SECURITY SCREW SICHERCHEITSSCHRAUBE	052.5400.--	4.8	38	2.5	8.9

OVERVIEW FIXATIONS

FIXINGS

CP 130, CP 130-LS, CP 155, CP 155-LS, CS 77, CW 50, CW 60, FIXATIONS, MASTERLINE 8-Fu, MasterPatio

		afm. dimen. d	afm. dimen. L	dimen. Masse k	D
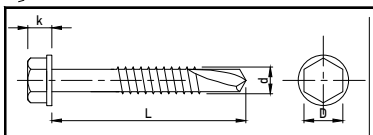 BIMETAL DRILL IN STEEL DIN 7168m	053.5199.--	5.5	70	5	8
	053.5200.--	5.5	90	5	8
	053.5201.--	5.5	110	5	8
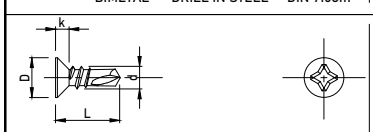 DIN 7504N	053.5403.--	4.2	13	2.5	8.1
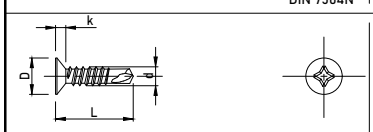 DIN 7504P	053.5409.--	3.9	16	2.1	7.5
	053.5406.--	4.2	16	3.1	8.1
	053.5401.--	4.2	25	2.5	8.1
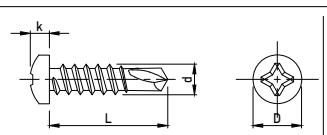 DIN 7504N	053.5412.--	4.2	19	2.5	8.1
	053.5404.--	4.2	19	2.5	10
	053.5402.--	4.2	38	2.5	8.1
	0FR.9881.--	4.8	25	3.55	9.5
	053.5411.--	4.8	32	3.55	9.5
	053.5413.--	4.8	50	3.55	9.5
	053.5414.--	4.8	60	3.7	9.5
	053.5415.--	4.8	70	3.7	9.5
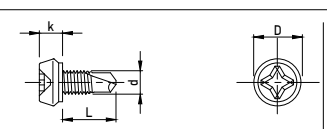	021.5169.--	M5	11	4.8	9.7
	024.5521.--	M5	14	4.8	9.7
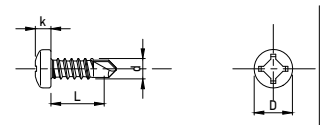	053.5405.--	4.2	13	3.2	7.9

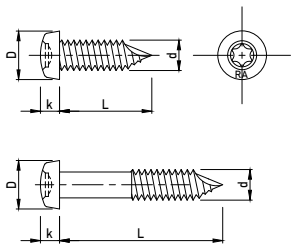

TORX
ISO 2768-f

	d	afm. dimen. L	dimen. Masse k	D
053.5460.--	6.3	19	3.95	10
053.5461.--	6.3	22	3.95	10
053.5462.--	6.3	25	3.95	10
053.5463.--	6.3	28	3.95	10
053.5464.--	6.3	31	3.95	10
053.5465.--	6.3	34	3.95	10
053.5466.--	6.3	37	3.95	10
053.5467.--	6.3	40	3.95	10
053.5468.--	6.3	43	3.95	10
053.5469.--	6.3	46	3.95	10
053.5470.--	6.3	49	3.95	10
053.5471.--	6.3	52	3.95	10
053.5472.--	6.3	55	3.95	10
053.5473.--	6.3	58	3.95	10
053.5474.--	6.3	61	3.95	10
053.5475.--	6.3	64	3.95	10
053.5476.--	6.3	67	3.95	10
053.5477.--	6.3	70	3.95	10
053.5478.--	6.3	73	3.95	10
053.5479.--	6.3	76	3.95	10
053.5480.--	6.3	109	3.95	10

		afm. dimen. L	dimen. Masse k	D
 DIN 934 ISO 4032	050.5400.-- M4	3.2		7
	050.5396.-- M5	4		8
	050.5395.-- M6	5		10
	050.5392.-- M8	5.5		13
	079.5398.--* M10	8		17
	* UK market			
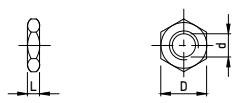 DIN 439 ISO 4035	050.5401.-- M10	5		17
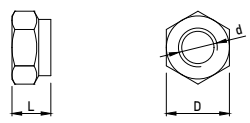 DIN 985 ISO 10511	050.5407.-- M6	6		10
	050.5394.-- M8	8		13
	050.5403.-- M10	10		17
	050.5393.-- M12	12		19
	ZESKANTMOER ZELFBORGEND ECROU HEXAGONALE AUTOBLOQANTE HEXAGON NUT SELF-LOCKING SECHSKANTMUTTER SELBSTSICHERND			
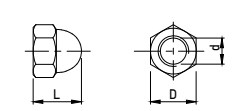 DIN 1587	067.5200.-- M6	12		10
	067.5201.-- M10	18		17
	067.5202.-- M12	22		19
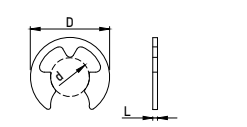 DIN 6799	054.5451.--* 8	1		16.3
	* used in assembly, sales = no			
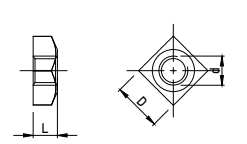	030.5711.-- M6	5		10.1

OVERVIEW FIXATIONS

FIXINGS

CP 130, CP 130-LS, CP 155, CP 155-LS, CS 77, CW 50, CW 60, FIXATIONS, MASTERLINE 8-Fu, MasterPatio

		d	afm. dimen. L	dimen. Masse k	D
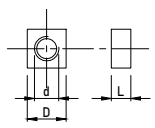 DIN 562	050.5406.--	M4	2.2		7
	050.5404.--	M5	4		8
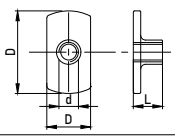 ISO 3506	050.5387.--	M5	7.5		11x19
	050.5386.--	M4	6		9x17
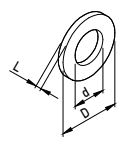 DIN 125A ISO 7089	054.5455.--	4.3	0.8		9
	054.5458.--	8.4	1.6		16
	067.5203.--	5.3	1		10
	067.5205.--	10.5	2		20
	067.5206.--	13	2.5		24
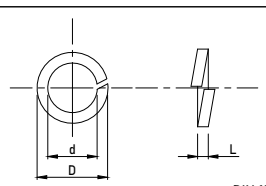 DIN 127B	054.5450.--	10.2	2.2		18.1
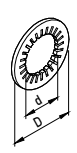 DIN 6797 J	072.5208.--	6.4			11
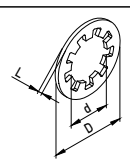 DIN 6797 J	079.5206.--	10.5	0.9		18
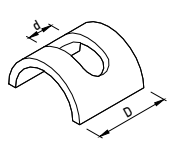	072.5209.--	5			14

OVERVIEW FIXATIONS

FIXINGS

CP 130, CP 130-LS, CP 155, CP 155-LS, CS 77, CW 50, CW 60, FIXATIONS, MASTERLINE 8-Fu, MasterPatio

		d	afm. dimen. L	dimen. Masse k	D
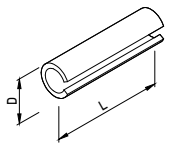 DIN 1481 ISO 8752	058.5950.--*	3	24		
	058.5943.--	3	40		
	065.6507.--	3.5	6		
	073.6517.--	3.5	12		
	058.5945.--	4.3	50		
	058.5944.--	4.4	26		
	058.5941.--	5	20		
	* used in assembly, sales = no				
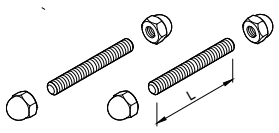	079.5212.--	M6	75		
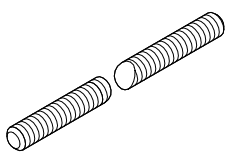 DIN 975	079.5211.--	M6	75		
	050.5210.--	M6	1000		
	050.5214.--	M8	2000		
	050.5221.--*	M10	45		
	050.5220.--	M10	1000		
	050.5215.--	M10	2000		
	079.5222.--	M10	3000		
	050.5216.--	M12	3000		
	* used in assembly, sales = no				
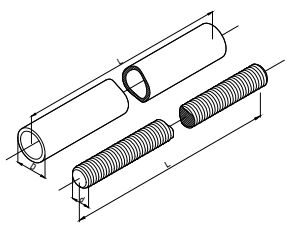	071.6350.XX	M10	3000		15.9

OVERVIEW FIXATIONS

FIXINGS

CP 130, CP 130-LS, CP 155, CP 155-LS, CS 77, CW 50, CW 60, FIXATIONS, MASTERLINE 8-Fu, MasterPatio

		d	afm. dimen. L	dimen. Masse k	D
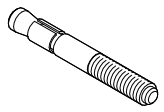	054.5475.--	10	80		
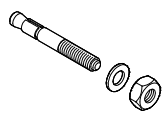	054.5480.--	10	95		
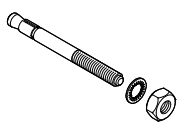	054.5469.--	12	110		
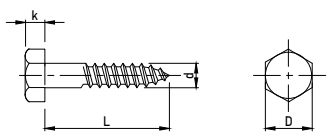 DIN 571	0FR.9884.-- 0FR.9883.--	6 6	80 90	4 4	10 10

OVERVIEW FIXATIONS

FIXINGS

CP 130, CP 130-LS, CP 155, CP 155-LS, CS 77, CW 50, CW 60, FIXATIONS, MASTERLINE 8-Fu, MasterPatio

		afm. dimen. d	afm. dimen. L	dimen. Masse k	D
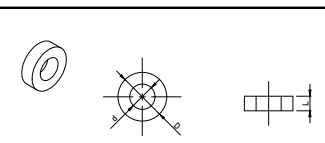	054.5452.01	5.2	3		10
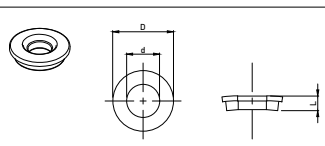	054.5440.-- 073.5204.--	6.8 6.6	3 4		12.5 19
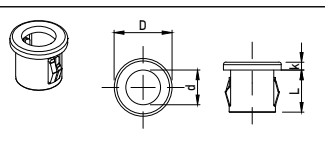	073.5222.04	7.1	8.7	1.6	11.9
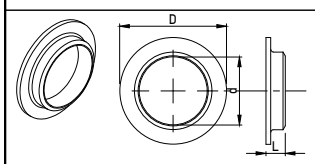	073.5221.07	14	4		22
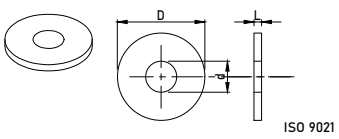 ISO 9021	067.5216.-- 067.5217.--	6.4	1.4		18
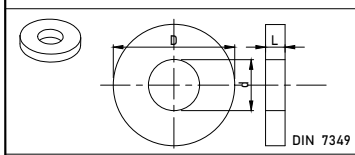 DIN 7349	054.5465.--	10.5	4		25
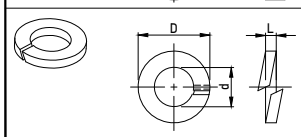 DIN 127B	054.5464.--	8.1	2		14.8

		d	afm. dimen. L	dimen. Masse k	D
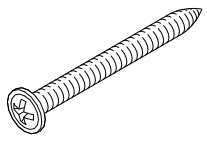	052.5303.--	5	50		
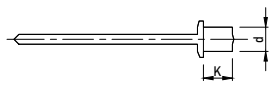	055.5631.-- 055.5620.-- 055.5640.-- 055.5650.-- 055.5660.--	3 4 4 4 4		8 6 8 10 15	
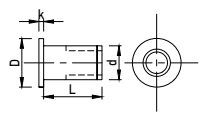 ISO 2760-m	057.5710.-- ALU. 057.5717.-- INOX 057.5720.-- ALU.	M5 M5 M6	12 12 14		
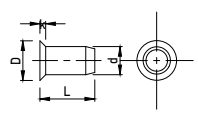	057.5709.-- ALU. 057.5711.-- ALU. 057.5713.-- (200 pc) INOX 057.5714.-- INOX 057.5721.-- ALU. 057.5722.-- 057.5715.--	M4 M5 M5 M5 M6 M6 M5	11.5 12 13.7 11.6 15 15.5 11.6		
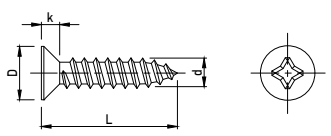	052.5328.--	4.2	60	2.5	8.1
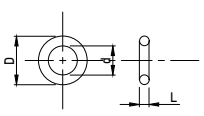	054.5454.04 073.8206.04	5 6	1.5 2		8 10
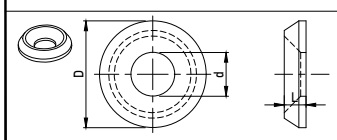	073.5209.--	9	4.5		22

OVERVIEW FIXATIONS

FIXINGS

CP 130, CP 130-LS, CP 155, CP 155-LS, CS 77, CW 50, CW 60, FIXATIONS, MASTERLINE 8-Fu, MasterPatio

		d	afm. dimen. L	dimen. Masse k	D
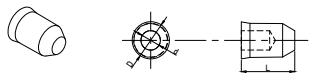	068.5932.-- 068.5933.--	4 4	11 16		7 7
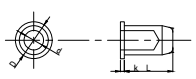	068.5934.00	5	10.8	0.8	7.6
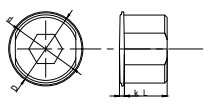	062.8188.--	15.3	8.8	1	7.6
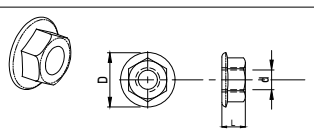	024.5042.--	M5	4.85		11.2
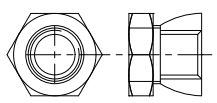	030.5710.--	M10	15		17
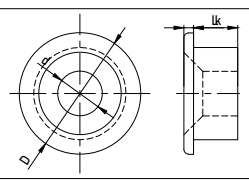	073.5211.--* AFSTANDSBUS PIECE DE DISTANCE DISTANCE BUSH DISTANZBUCHSE * used with a screw 050.5075.-- (x1)	9.2	2	9.1	25
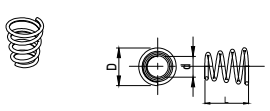	054.5500.--	4.3	9		7.77

OVERVIEW FIXATIONS

FIXINGS

CP 130, CP 130-LS, CP 155, CP 155-LS, CS 77, CW 50, CW 60, FIXATIONS, MASTERLINE 8-Fu, MasterPatio

		afm. dimen. L	dimen. Masse k	D
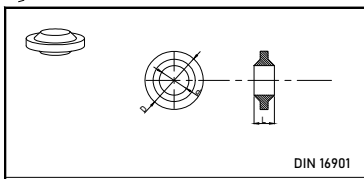 DIN 16901	**073.8201.01**	4.2		12
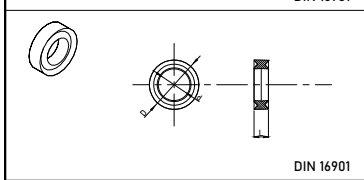 DIN 16901	**073.8201.01** BORGING 6.55/10 RONDELLE DE BLOCAGE 6.55/10 SAFETY RING 6.55/10 SICHERINGSRING 6.55/10	3		10.2
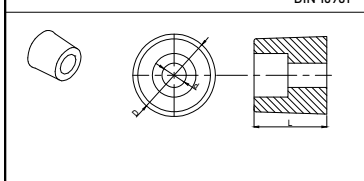	**062.6744.04**	15		16
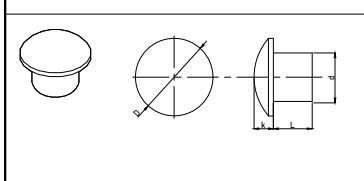	**065.6550.01** STOP 10MM BOUCHE-TROU 10MM VERSCHLUSSKAPPE 10MM PLUG 10MM	8	4	16
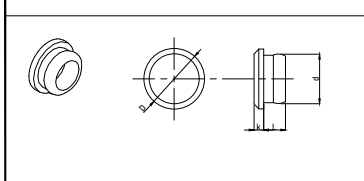	**065.6555.04** STOP 10MM BOUCHE-TROU 10MM VERSCHLUSSKAPPE 10MM PLUG 10MM	4.5	2	12.3
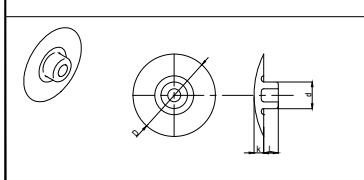	**071.5440.SY** AFDEKKAP Ø17MM CAPUCHON Ø17MM FACE CAP Ø17MM ABDECKKAPPE Ø17MM	3	2	17
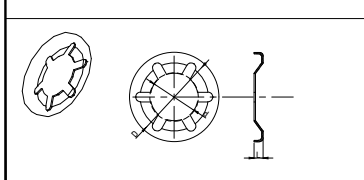	**073.5207.--** **073.5208.--** SNELBORGER ZONDER KAP RONDELLE ELAST. DENTS ESPACEES TOOTHED LOCK WASHER ZAHNSCHEIBEN INNENGEZAHNT	1.9 1.47		18.4 15.4

SILL INNER CORNER

SEALING SILL/THRESHOLD - INNER CORNER 135° | 0M0.1304.XX

CF 68, CF 77, CS 104-HI, CS 77, MASTERLINE 8-Fu, SlimLine 38, SlimLine 68, SlimLine 68

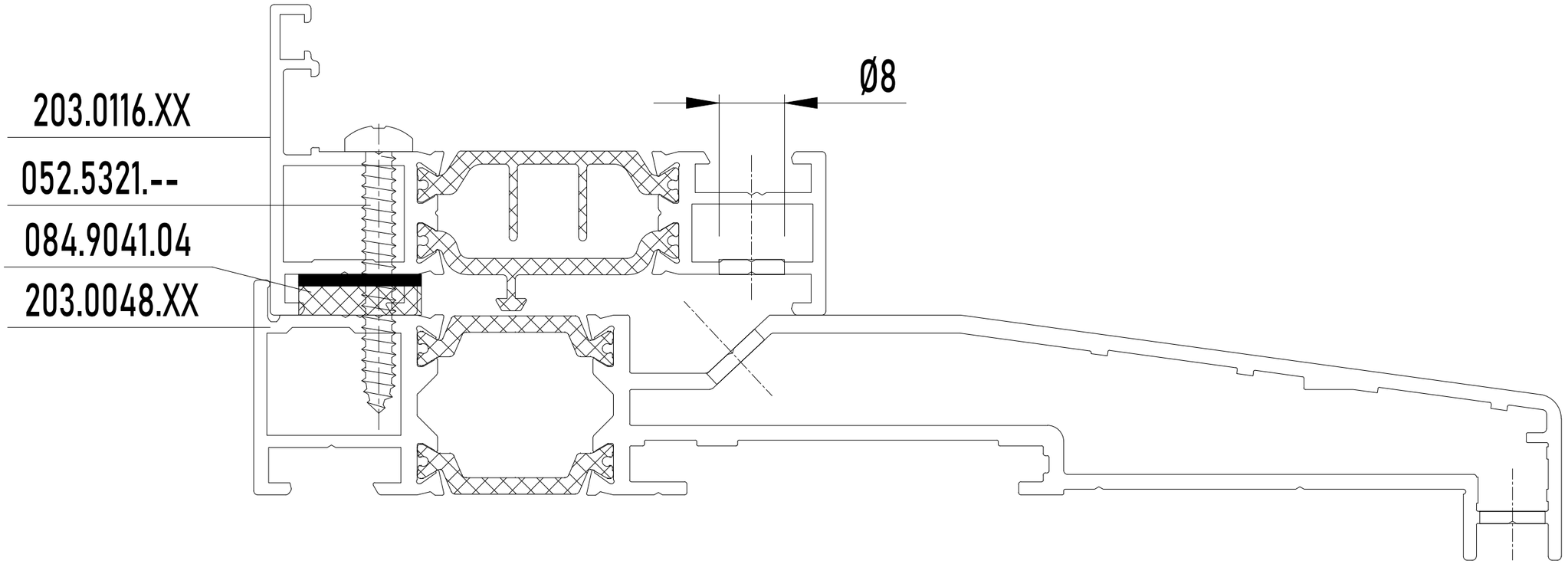

PANEL DOOR AUTOMATIC SEALING OUTWARD OPENING

PANEL DOOR OUTWARD OPENING WITH DOOR LATCH

MASTERLINE 8-Fu

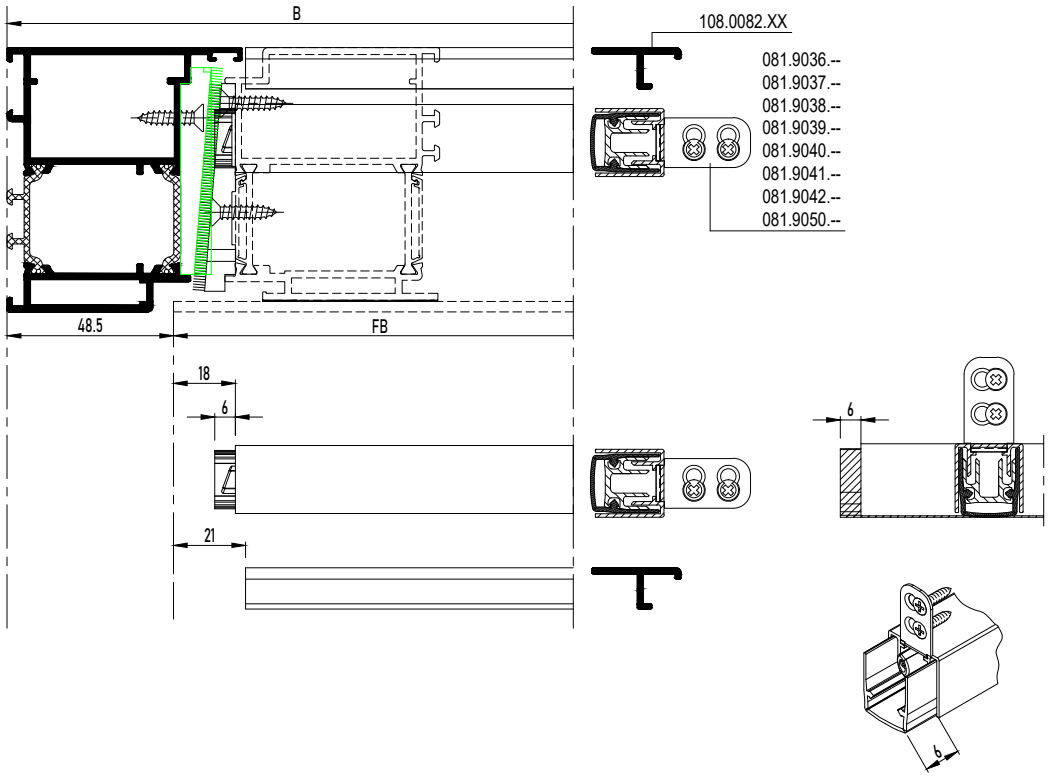

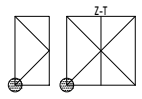

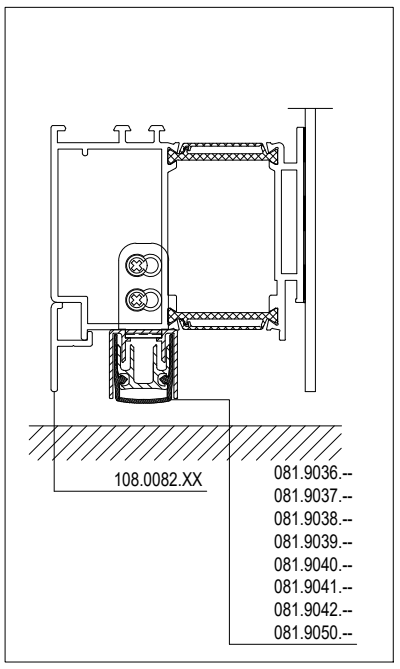

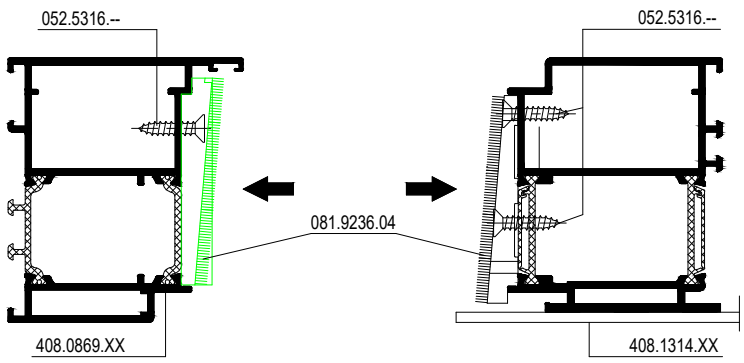

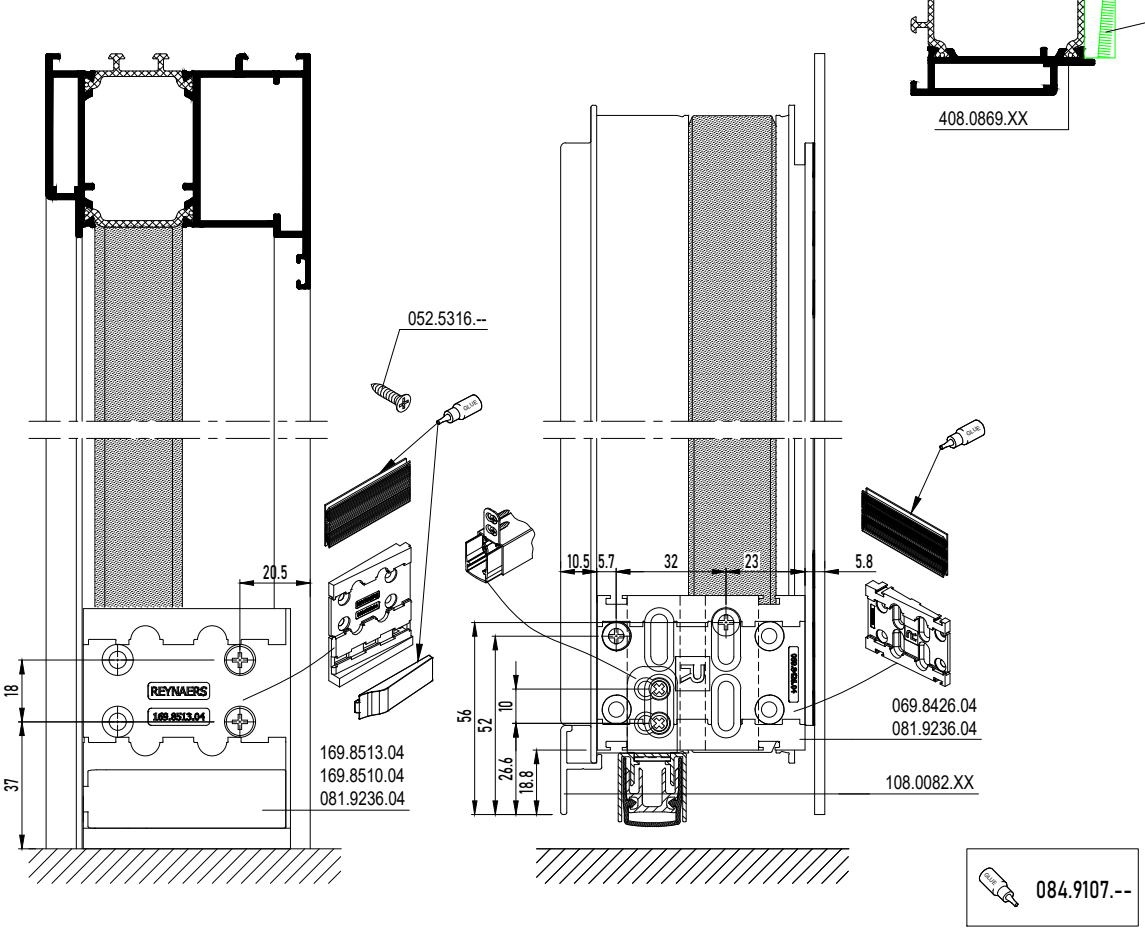

PANEL DOOR AUTOMATIC SEALING OUTWARD OPENING

PANEL DOOR OUTWARD OPENING WITH DOOR LATCH

MASTERLINE 8-Fu

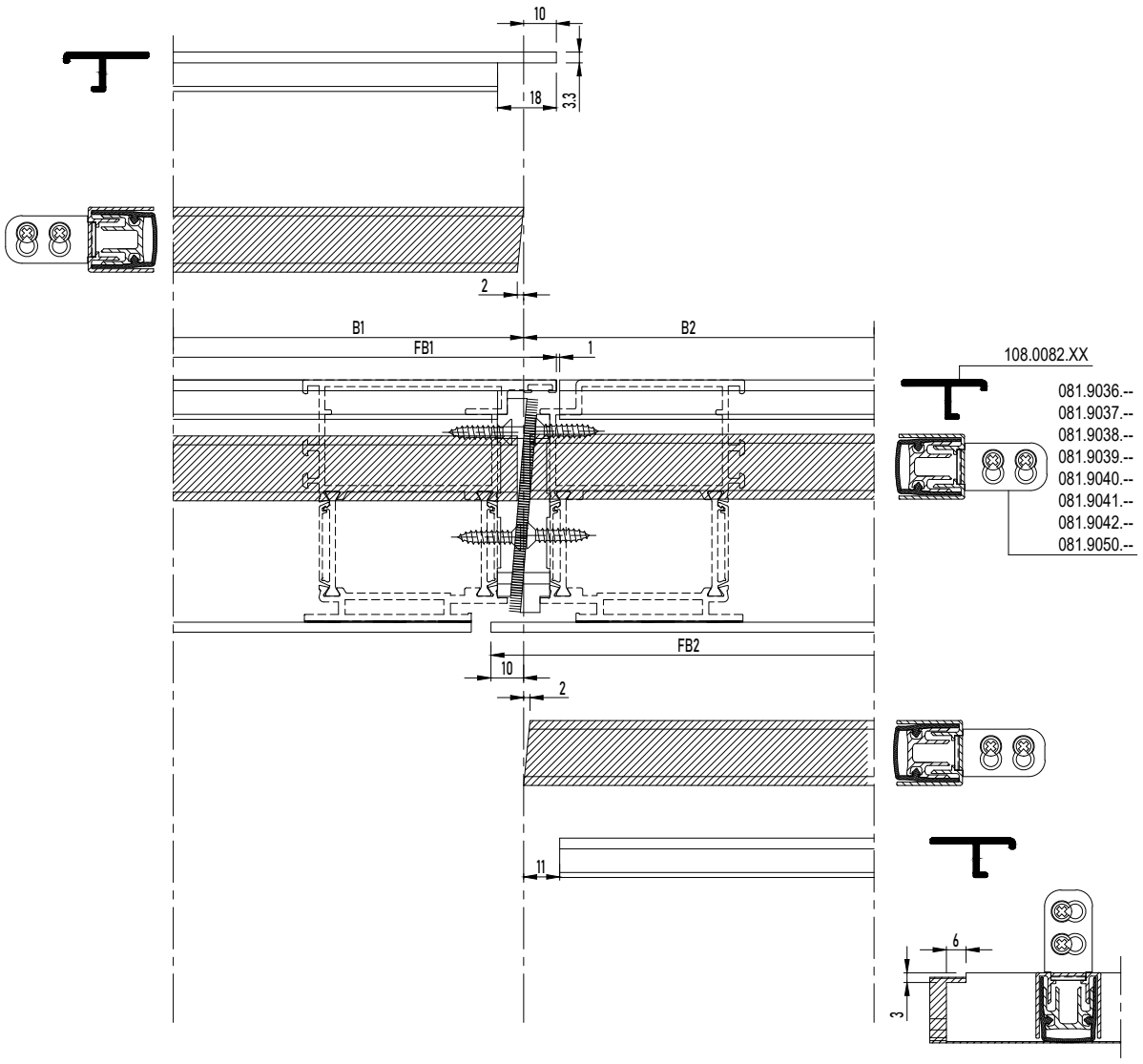

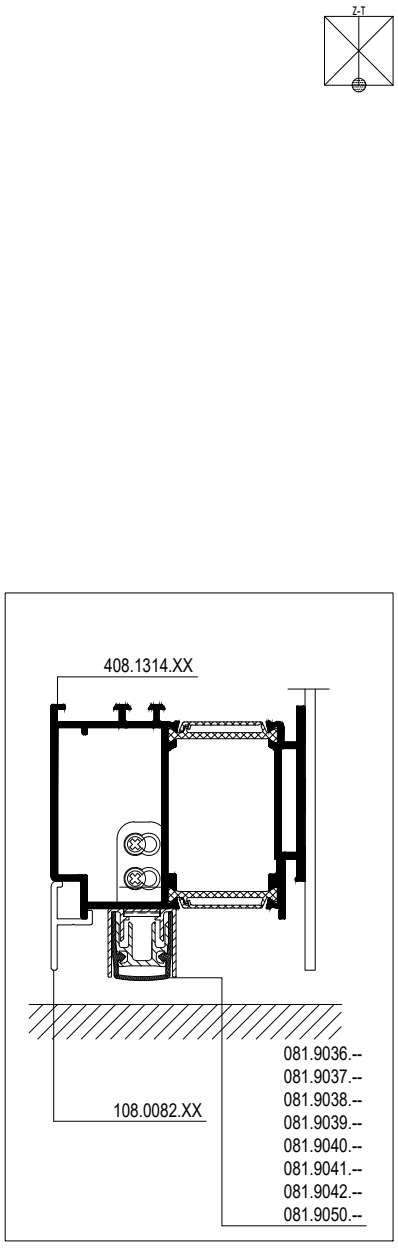

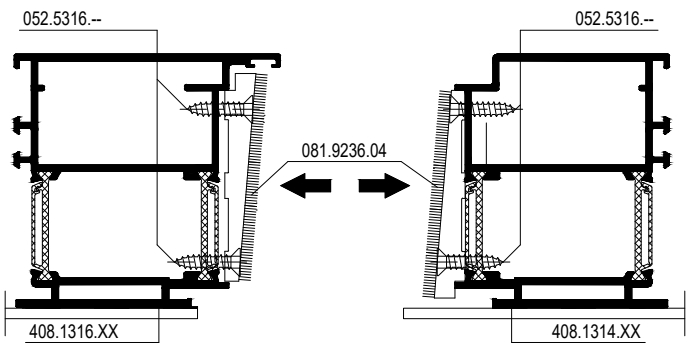

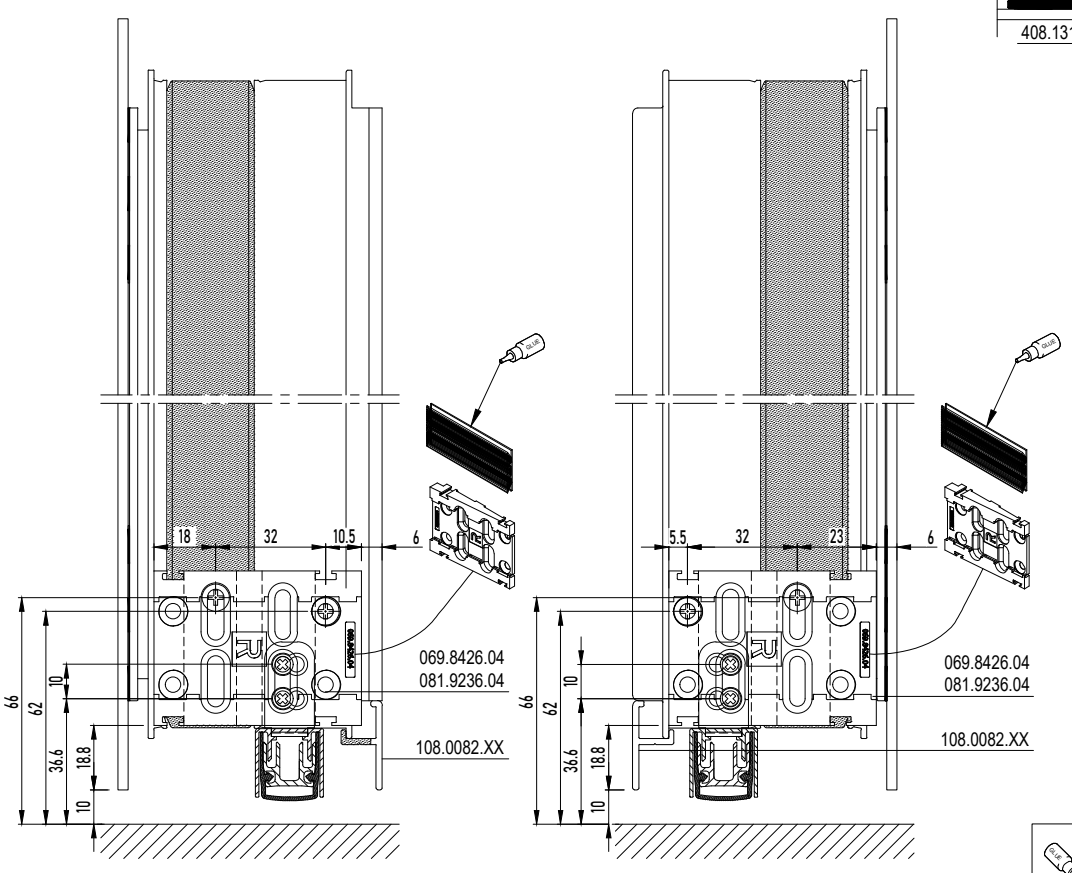

SAWING CLAMP VENT

CLAMP BLOCKS SAW 095.B600.00

MASTERLINE 8-De, MASTERLINE 8-Fu

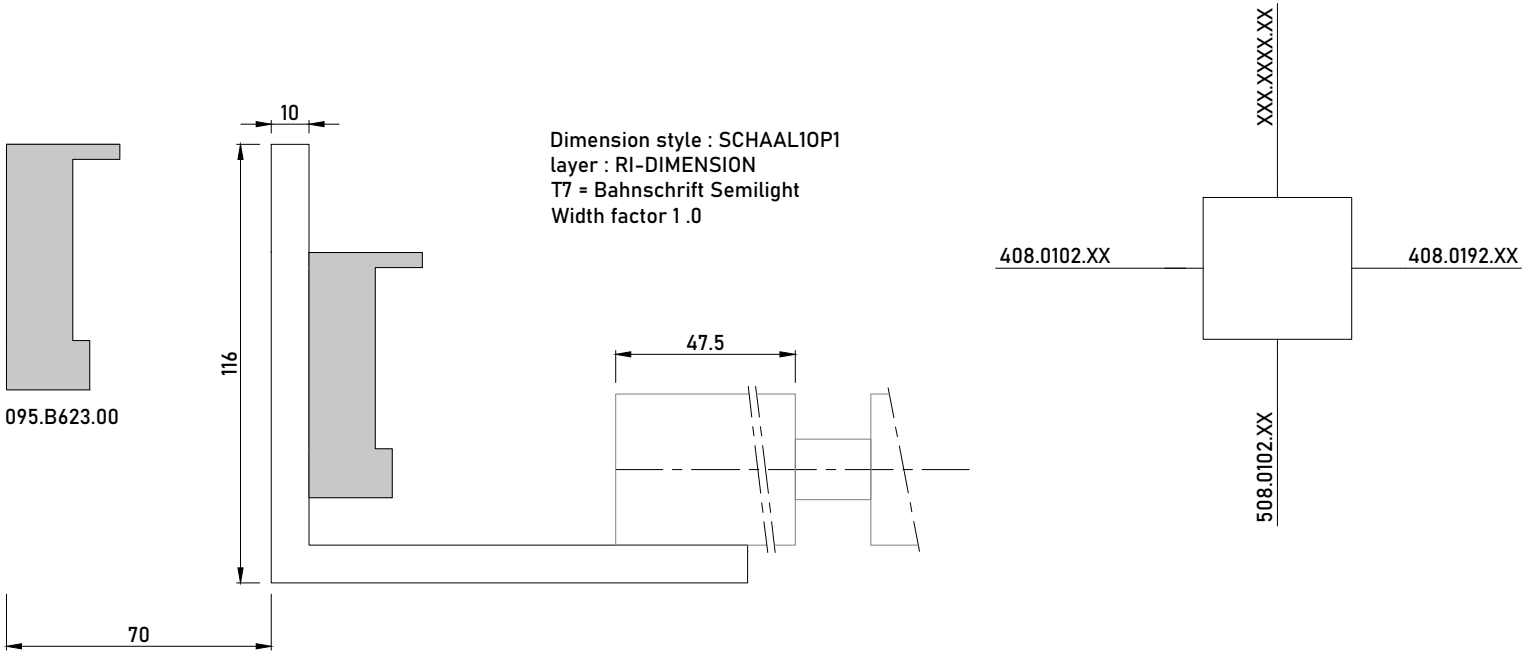

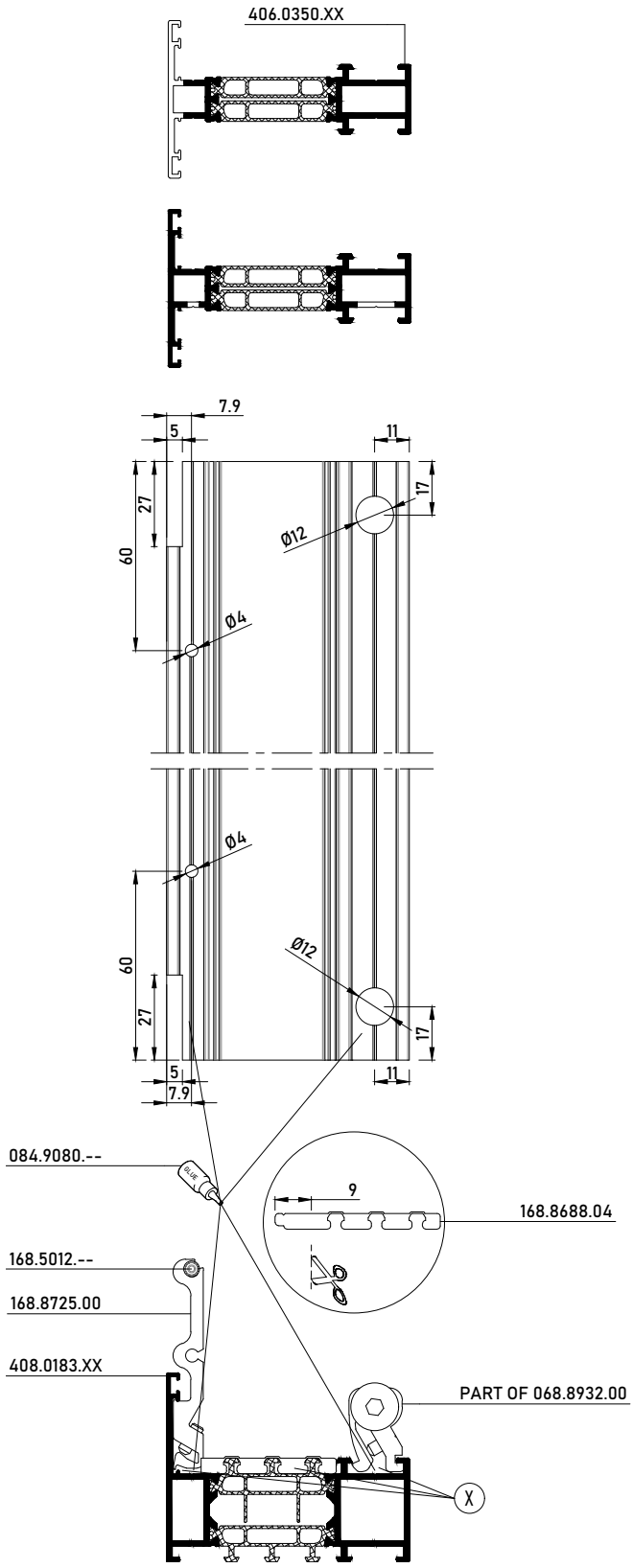
406.0350.XX
7.9
5
11
27
17
60
Ø12
Ø4
Ø4
Ø12
60
27
17
5
7.9
11
084.9080.--
9
168.8688.04
168.5012.--
168.8725.00
408.0183.XX
PART OF 068.8932.00
X


150kg
Max. draaggewicht per set 150kg
Poids de portée maximale par set 150kg
Maximal bearing weight per set 150kg
Maximales Traggewicht pro Satz 150kg

T SCREW JIG PANEL DOOR

TRANSOM-MULLION - DOUBLE-SIDED PANEL DOOR

MASTERLINE 8-Fu

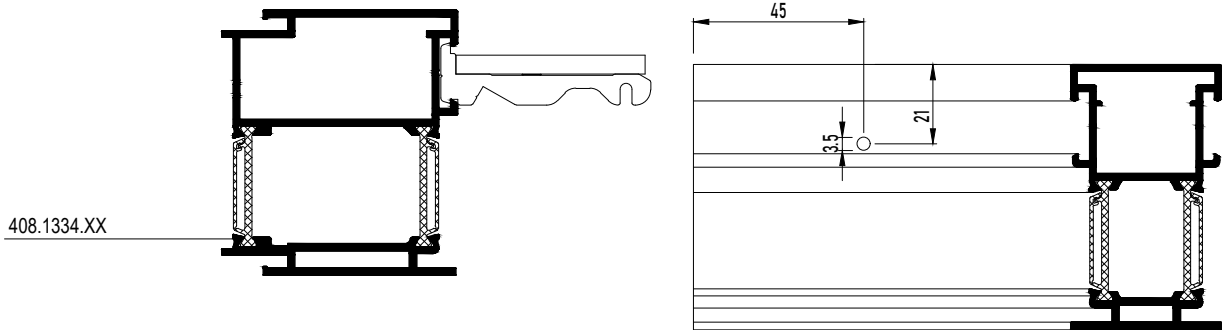

T SCREW JIG PANEL DOOR

TRANSOM-MULLION - DOUBLE-SIDED PANEL DOOR

MASTERLINE 8-Fu

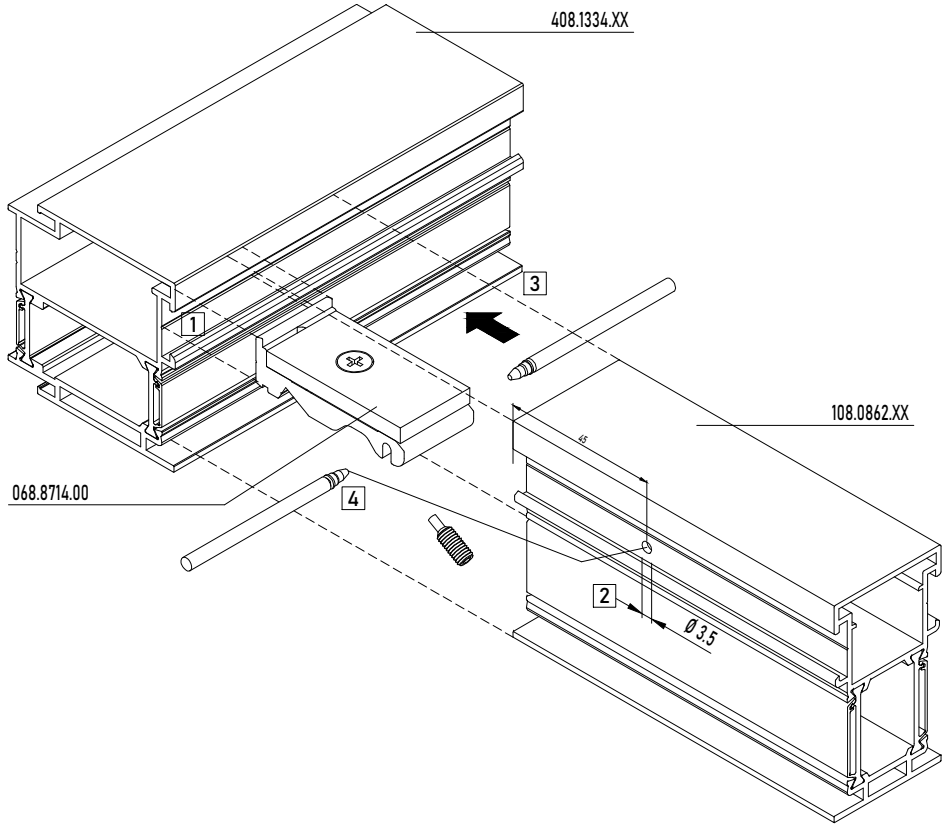

MONTAGEVOLGORDE L 'ORDRE DE MONTAGE THE ORDER OF ASSEMBLY MONTAGEREIHENFOLGE	1	2	3	.

T SCREW MC PANEL DOOR

TRANSOM-MULLION - DOUBLE-SIDED PANEL DOOR

MASTERLINE 8-Fu

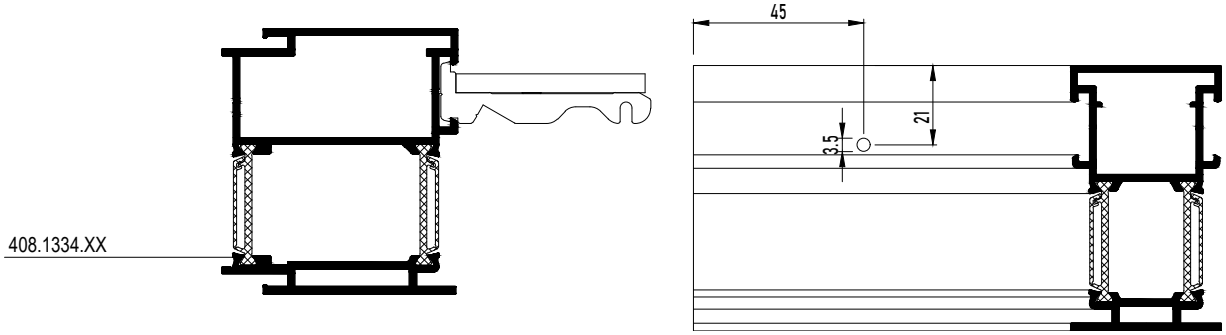

T SCREW MC PANEL DOOR

TRANSOM-MULLION - DOUBLE-SIDED PANEL DOOR

MASTERLINE 8-Fu

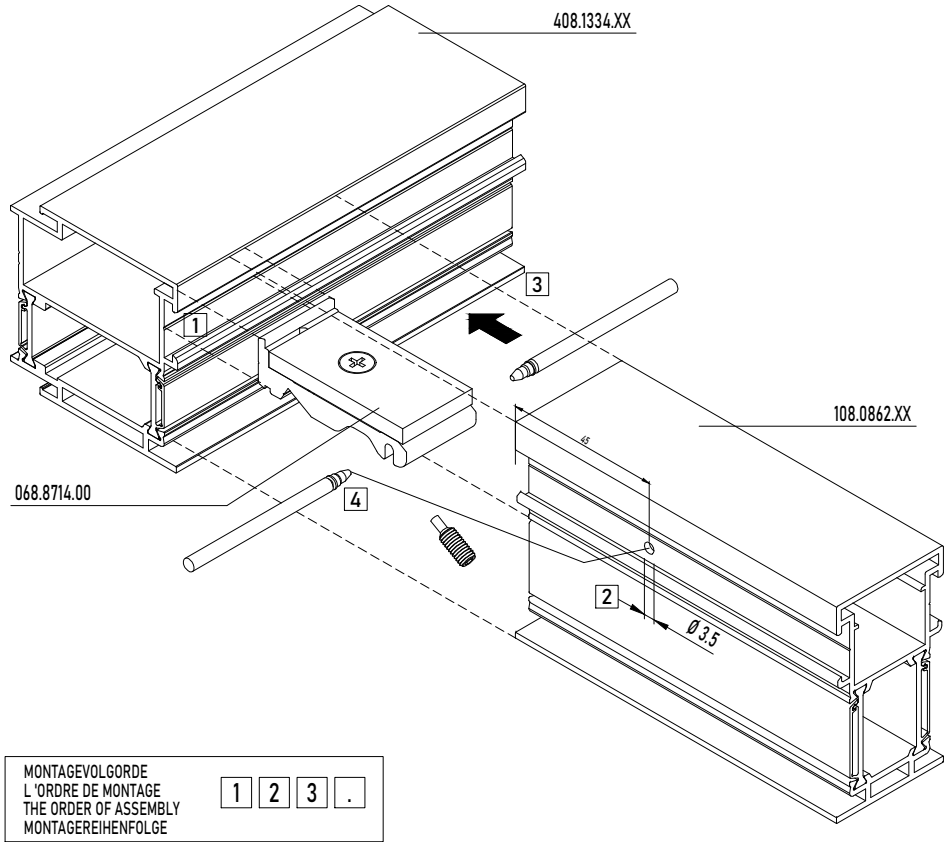

MONTAGEVOLGORDE L'ORDRE DE MONTAGE THE ORDER OF ASSEMBLY MONTAGEREIHENFOLGE	1	2	3	.

Max Dimensions
Maximale afmetingen
Dimensions maximales
Maximale Abmessungen

Reynaers Aluminium

MAXIMAL DIMENSIONS FIXED WINDOW

MAX. SIZES FIXED WINDOW

MASTERLINE 8-De, MASTERLINE 8-Fu, MASTERLINE 8-Re

VAST RAAM
FENETRE FIXE
FIXED WINDOW
FESTVERGLASUNG

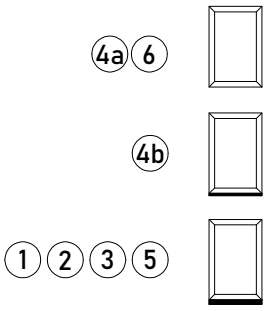

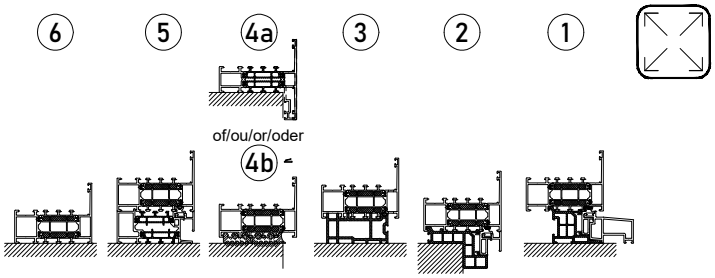

408.0145.XX 180.9136.04 108.0035.04 408.1025.04 408.1024.04
508.0145.XX 408.1023.C35 408.1023.C35

408.0146.XX
508.0146.XX

408.0147.XX

BOUWAANSLUITING - PLAATSING ONDERDORPEL
RACCORDEMENT AU BATIMENT - FINITION LATERALE SEUIL
BUILDING CONNECTION - SEALING SILL/THRESHOL
BAUANSCHLUSS - MONTAGE WETTERSCHENKEL

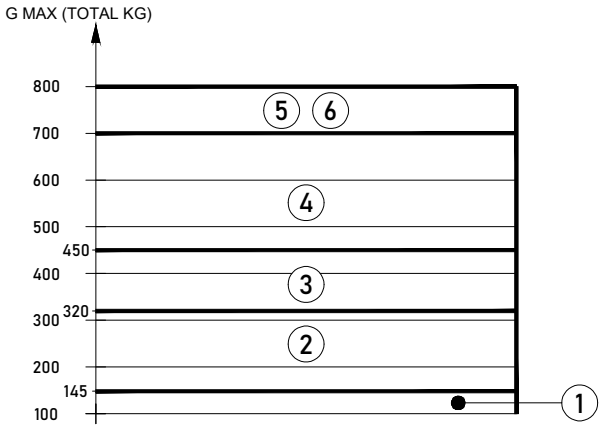

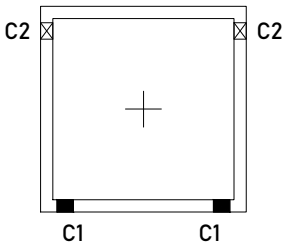

C1 = 1 x 169.8748.04 (G MAX <800KG)

THE SUB STRUCTURE AND THE CONNECTION SHOULD BE ABLE TO TAKE UP THE WEIGHT OF THE ELEMENTS.
IN CASE OF DOUBT, PLEASE CONTACT A STRUCTURAL ENGINEER.

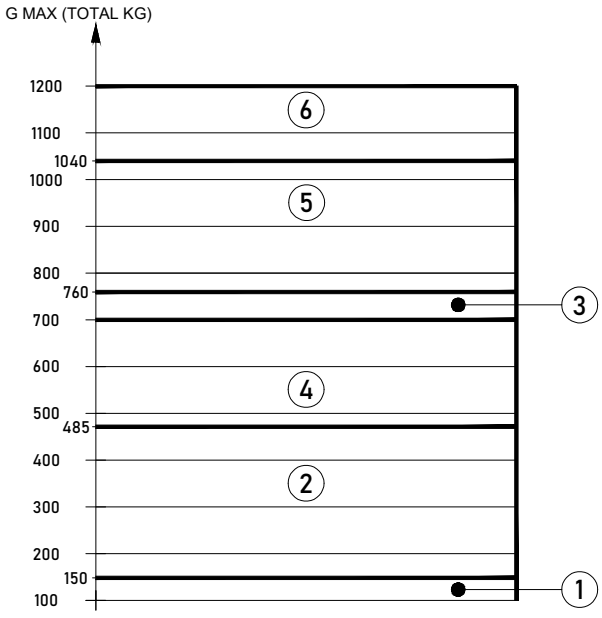

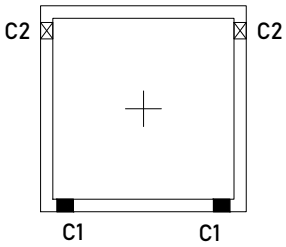

C1 = 2 x 169.8748.04 (G MAX <1200KG)

THE SUB STRUCTURE AND THE CONNECTION SHOULD BE ABLE TO TAKE UP THE WEIGHT OF THE ELEMENTS.
IN CASE OF DOUBT, PLEASE CONTACT A STRUCTURAL ENGINEER.

MAXIMAL DIMENSIONS SOBINCO

MAX. ADMISSIBLE SIZES

MASTERLINE 8-De, MASTERLINE 8-Fu, MASTERLINE 8-Re

DRAAIKIPRAAM
FENETRE OSCILLANT-BATTANTE
TURN AND TILT WINDOW
DREHKIPPFENSTER

TOEBEHOREN: SOBINCO COSMO 130 kg
ACCESSOIRES: SOBINCO COSMO 130 kg
ACCESSORIES: SOBINCO COSMO 130 kg
ZUBEHOER: SOBINCO COSMO 130 kg

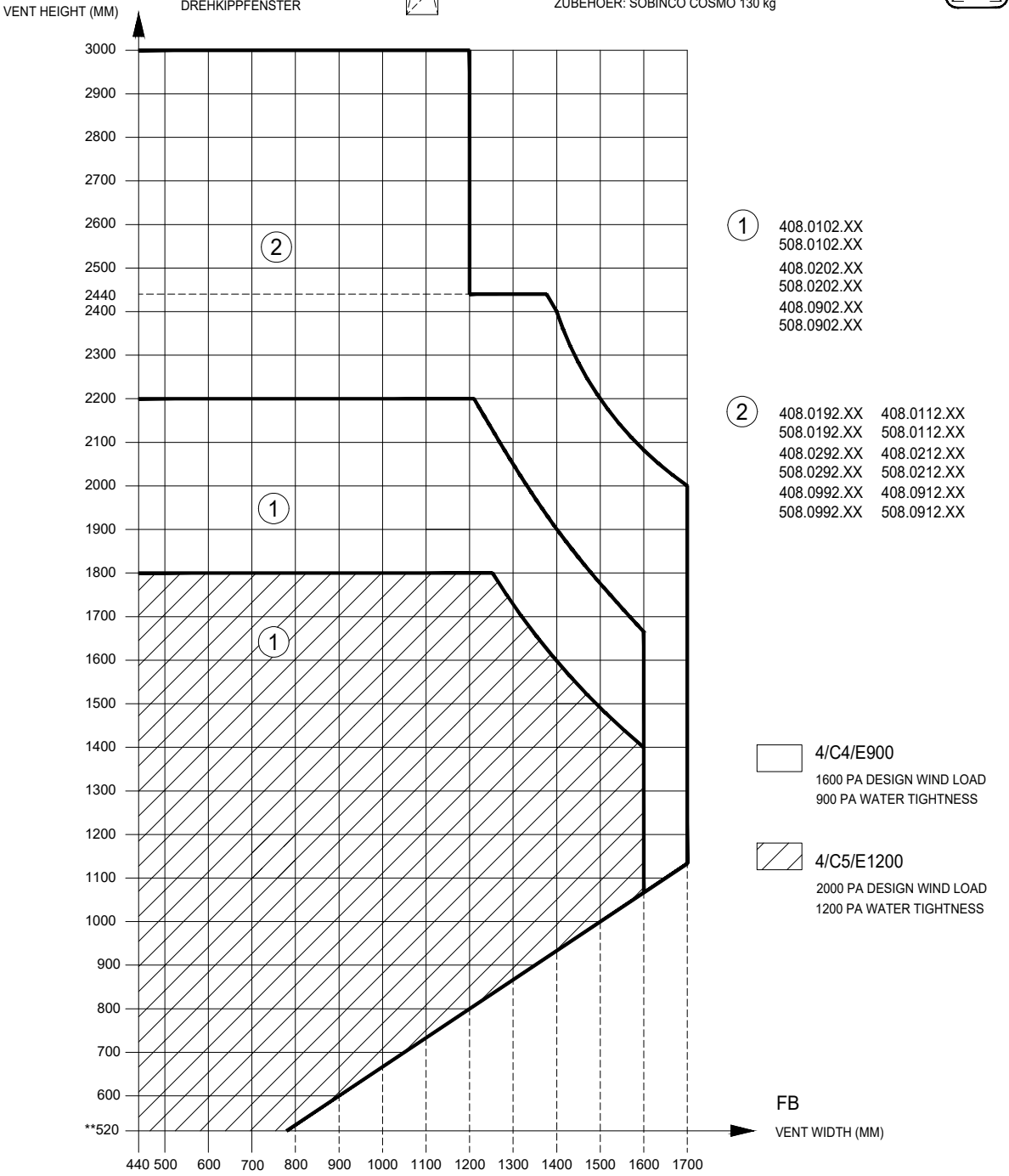

408.0102 - 508.0102	130	130	130	130	130	126	112	101	92	83	77	71	
408.0192 - 508.0192	130	130	130	130	130	130	130	130	130	130	130	130	130
408.0112 - 508.0112	130	130	130	130	130	130	130	130	130	130	130	130	130

Maximum vent weight (kg) *

* THE SPECIFIED VENT WEIGHT IS ONLY POSSIBLE WHEN THE CHOSEN ACCESSORIES CAN WITHSTAND THIS LOAD.
** MINIMUM FH OF 495 MM POSSIBLE WITH FIXED HANDLE POSITION

MAXIMAL DIMENSIONS SOBINCO

MAX. ADMISSIBLE SIZES

MASTERLINE 8-De, MASTERLINE 8-Fu, MASTERLINE 8-Re

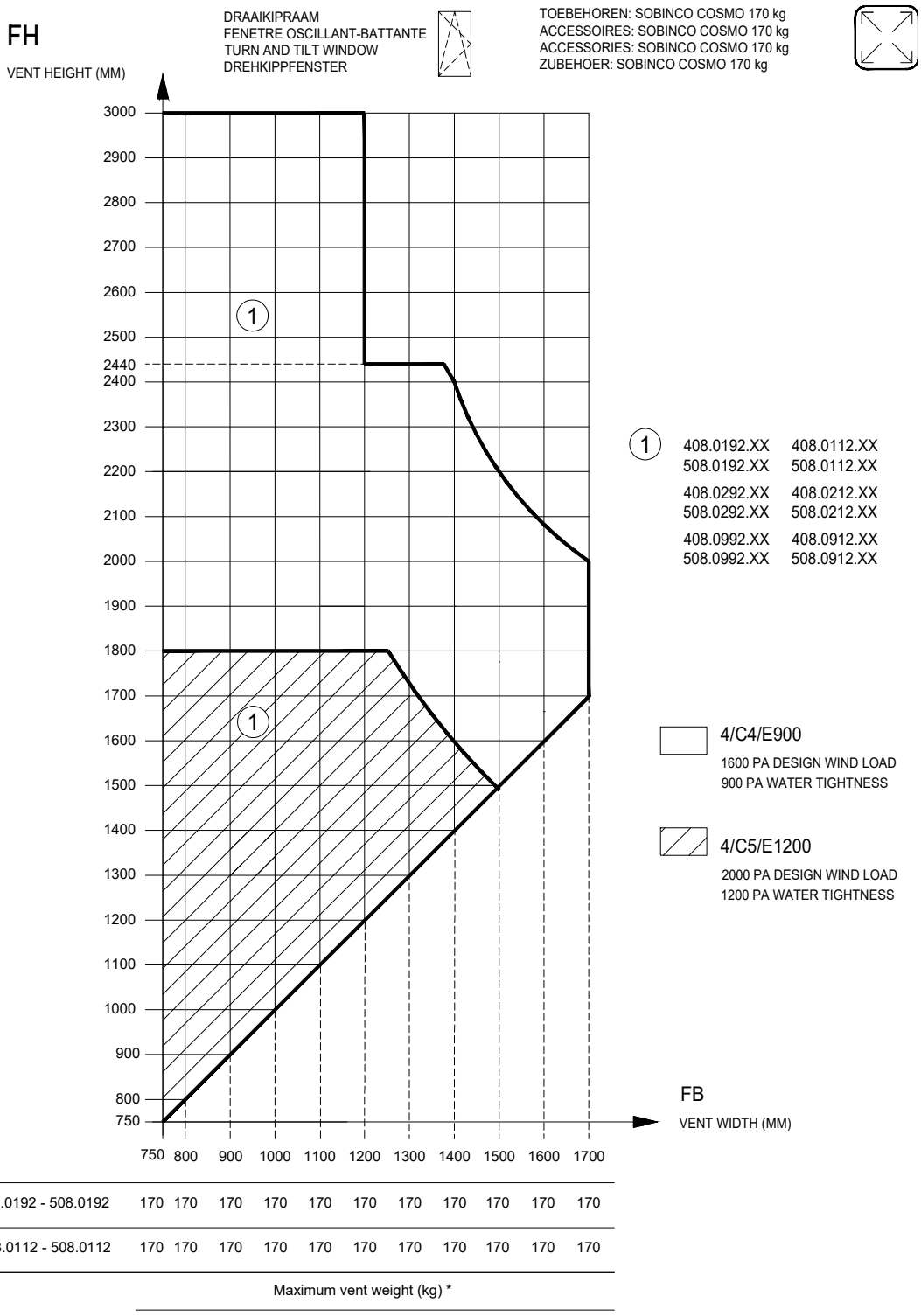

408.0192 - 508.0192	170	170	170	170	170	170	170	170	170	170	170
408.0112 - 508.0112	170	170	170	170	170	170	170	170	170	170	170

Maximum vent weight (kg) *

* THE SPECIFIED VENT WEIGHT IS ONLY POSSIBLE WHEN THE CHOSEN ACCESSORIES CAN WITHSTAND THIS LOAD.

MAXIMAL DIMENSIONS SOBINCO

MAX. ADMISSIBLE SIZES

MASTERLINE 8-De, MASTERLINE 8-Fu, MASTERLINE 8-Re

DRAAIKIPRAAM
FENETRE OSCILLANT-BATTANTE
TURN AND TILT WINDOW
DREHKIPPFENSTER



TOEBEHOREN: SOBINCO COSMO 200 kg
ACCESSOIRES: SOBINCO COSMO 200 kg
ACCESSORIES: SOBINCO COSMO 200 kg
ZUBEHOER: SOBINCO COSMO 200 kg



FH

VENT HEIGHT (MM)

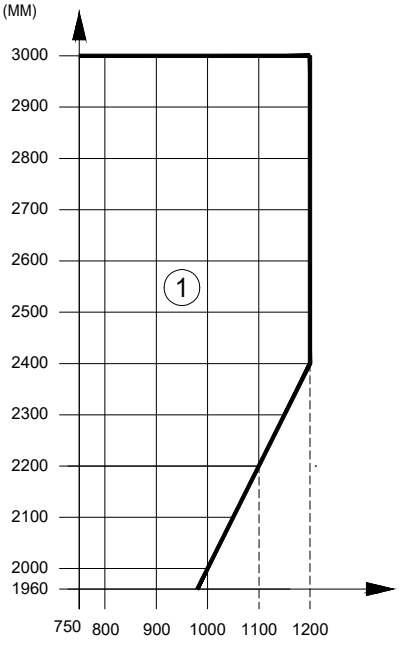

FB

VENT WIDTH (MM)

① 408.0192.XX 408.0112.XX
508.0192.XX 508.0112.XX
408.0292.XX 408.0212.XX
508.0292.XX 508.0212.XX
408.0992.XX 408.0912.XX
508.0992.XX 508.0912.XX

4/C4/E900
1600 PA DESIGN WIND LOAD
900 PA WATER TIGHTNESS

	750	800	900	1000	1100	1200
408.0192 - 508.0192	200	200	200	200	200	200
408.0112 - 508.0112	200	200	200	200	200	200

Maximum vent weight (kg) *

* THE SPECIFIED VENT WEIGHT IS ONLY POSSIBLE WHEN THE CHOSEN ACCESSORIES CAN WITHSTAND THIS LOAD.

MAXIMAL DIMENSIONS SOBINCO

MAX. ADMISSIBLE SIZES

MASTERLINE 8-De, MASTERLINE 8-Fu, MASTERLINE 8-Re

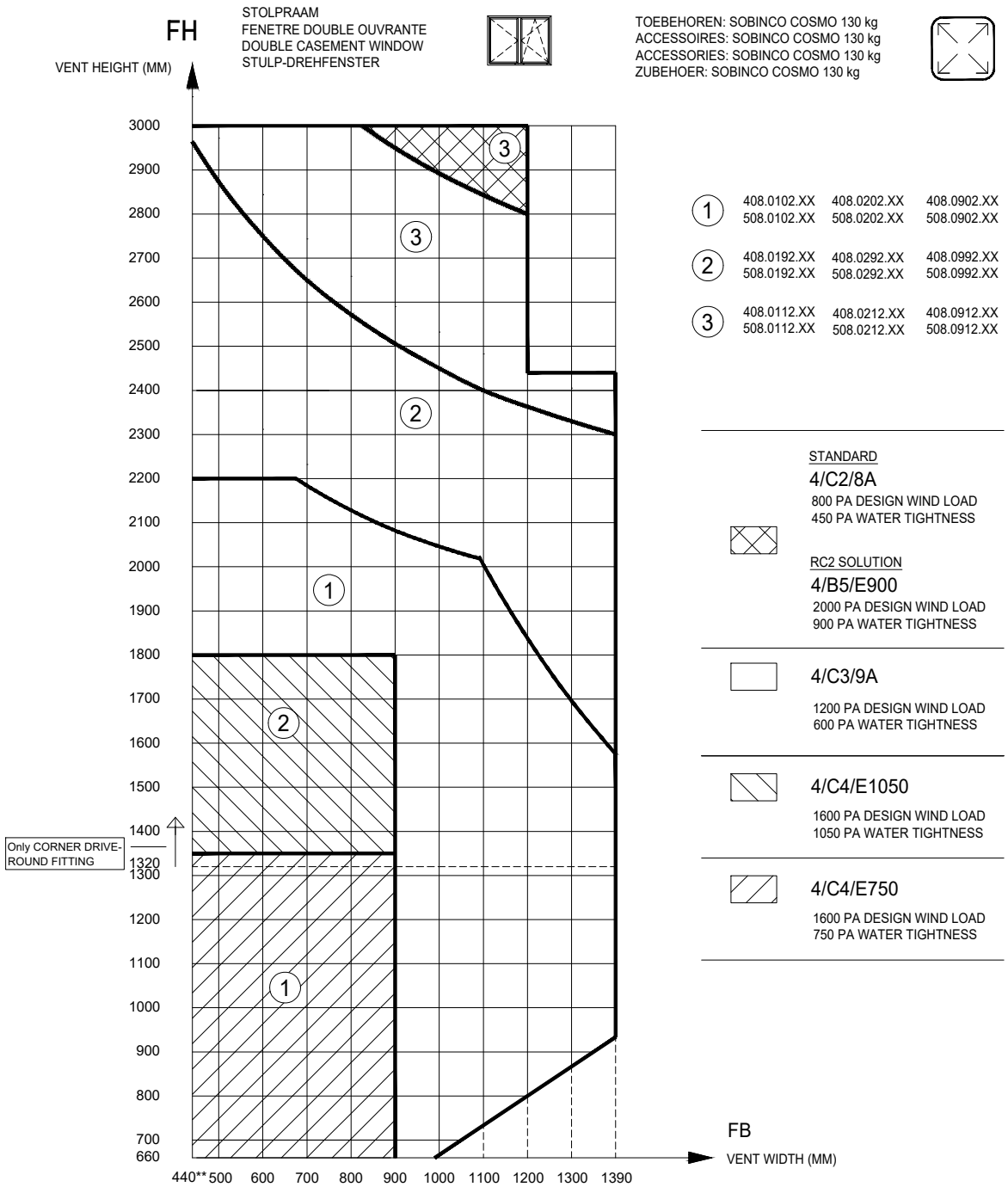

Maximum vent weight (kg) *	440**	500	600	700	800	900	1000	1100	1200	1300	1390
408.0102 - 508.0102	130	130	130	130	130	130	126	112	101	92	83
408.0192 - 508.0192	130	130	130	130	130	130	130	130	130	130	130
408.0112 - 508.0112	130	130	130	130	130	130	130	130	130	130	130

* THE SPECIFIED VENT WEIGHT IS ONLY POSSIBLE WHEN THE CHOSEN ACCESSORIES CAN WITHSTAND THIS LOAD.

** FB2 MIN 400 MM POSSIBLE (CLAMPING PIECES)

MAXIMAL DIMENSIONS SOBINCO

MAX. ADMISSIBLE SIZES

MASTERLINE 8-De, MASTERLINE 8-Fu, MASTERLINE 8-Re

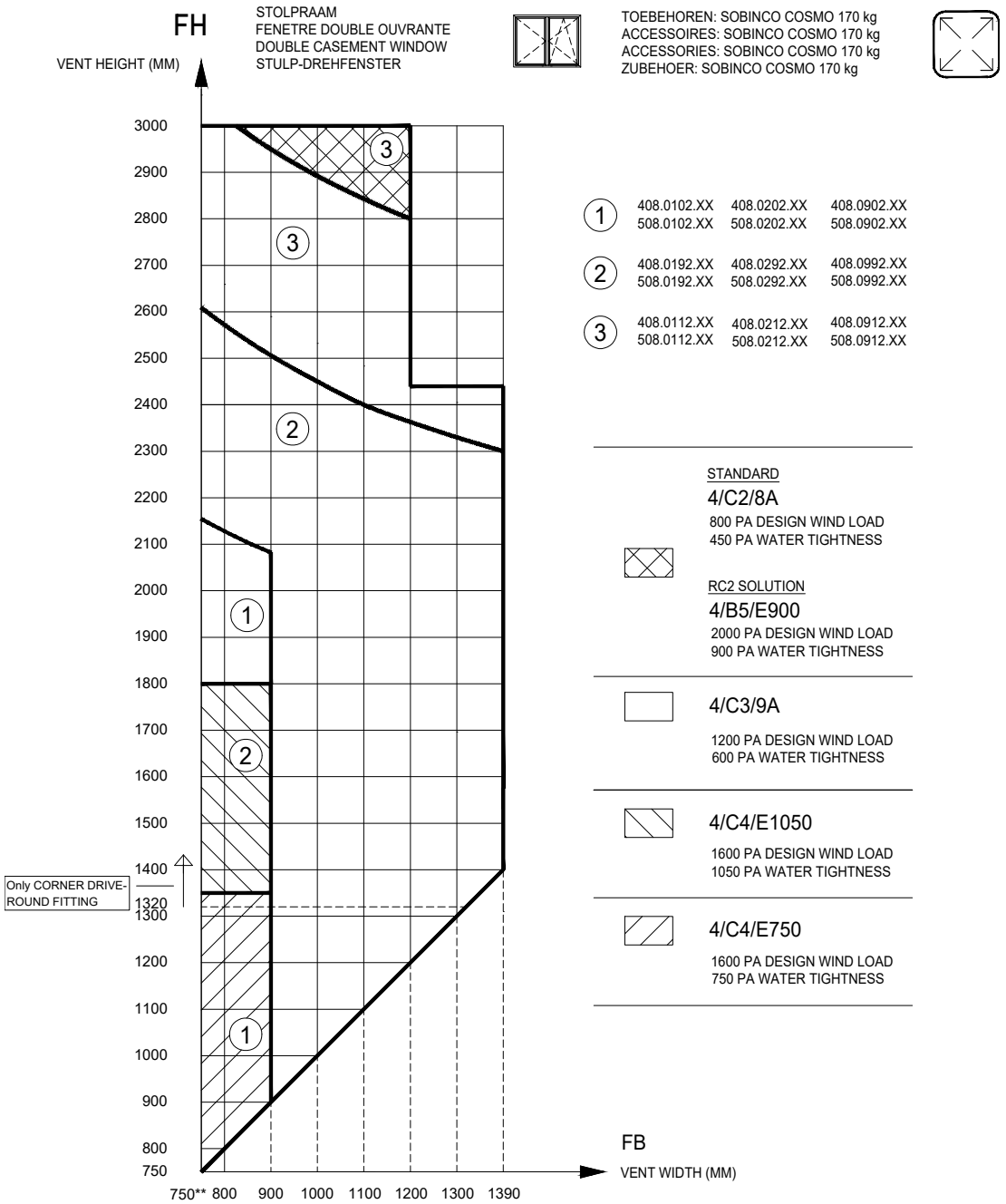

408.0102 - 508.0102	140	140	140					
408.0192 - 508.0192	170	170	170	170	170	170	170	170
408.0112 - 508.0112	170	170	170	170	170	170	170	170

Maximum vent weight (kg) *

* THE SPECIFIED VENT WEIGHT IS ONLY POSSIBLE WHEN THE CHOSEN ACCESSORIES CAN WITHSTAND THIS LOAD.

** FB2 MIN 620 MM POSSIBLE

MAXIMAL DIMENSIONS SOBINCO

MAX. ADMISSIBLE SIZES

MASTERLINE 8-De, MASTERLINE 8-Fu, MASTERLINE 8-Re

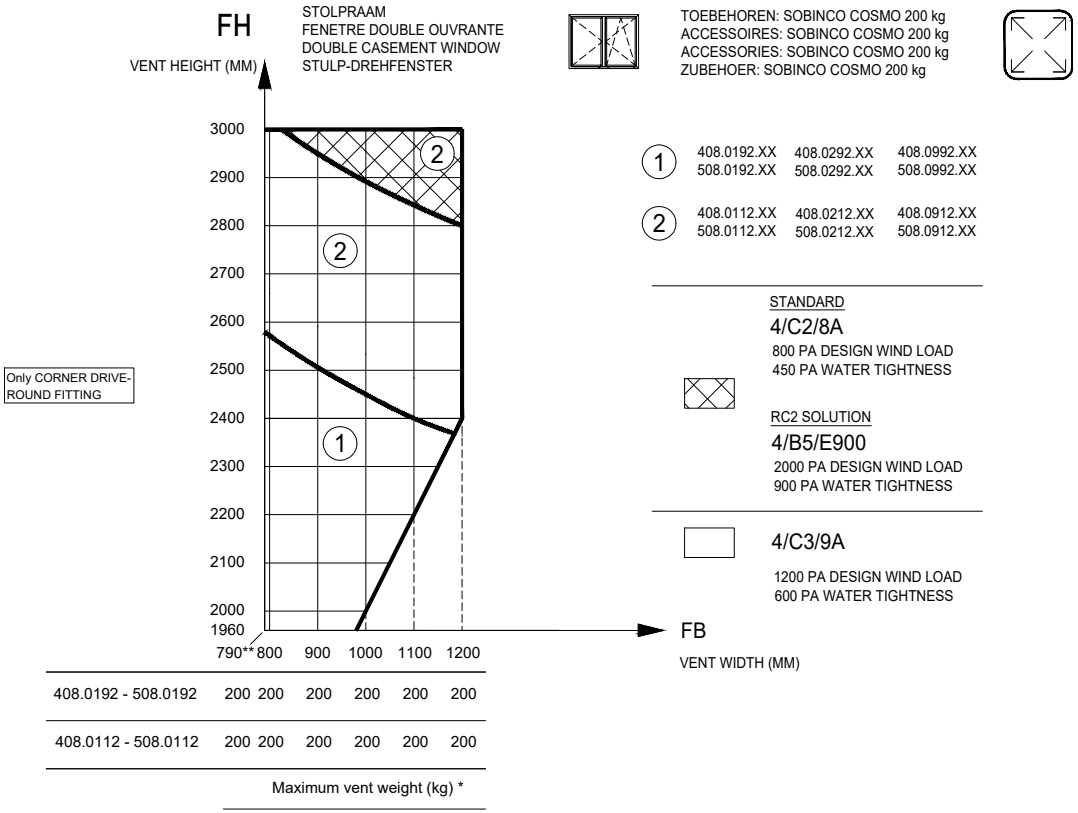

STOLPRAAM
FENETRE DOUBLE OUVRANTE
DOUBLE CASEMENT WINDOW
STULP-DREHFENSTER

TOEBEHOREN: SOBINCO COSMO 200 kg
ACCESSOIRES: SOBINCO COSMO 200 kg
ACCESSORIES: SOBINCO COSMO 200 kg
ZUBEHOER: SOBINCO COSMO 200 kg

1	408.0192.XX 508.0192.XX	408.0292.XX 508.0292.XX	408.0992.XX 508.0992.XX
2	408.0112.XX 508.0112.XX	408.0212.XX 508.0212.XX	408.0912.XX 508.0912.XX

STANDARD

4/C2/8A

800 PA DESIGN WIND LOAD
450 PA WATER TIGHTNESS

RC2 SOLUTION

4/B5/E900

2000 PA DESIGN WIND LOAD
900 PA WATER TIGHTNESS

4/C3/9A

1200 PA DESIGN WIND LOAD
600 PA WATER TIGHTNESS

* THE SPECIFIED VENT WEIGHT IS ONLY POSSIBLE WHEN THE CHOSEN ACCESSORIES CAN WITHSTAND THIS LOAD.

** FB2 MIN 750 MM POSSIBLE

MAXIMAL DIMENSIONS SOBINCO

MAX. ADMISSIBLE SIZES

MASTERLINE 8-De, MASTERLINE 8-Fu, MASTERLINE 8-Re

FH

INTEGRATED DOUBLE CASEMENT WINDOW

ACCESSOIRES: SOBINCO COSMO 130 kg

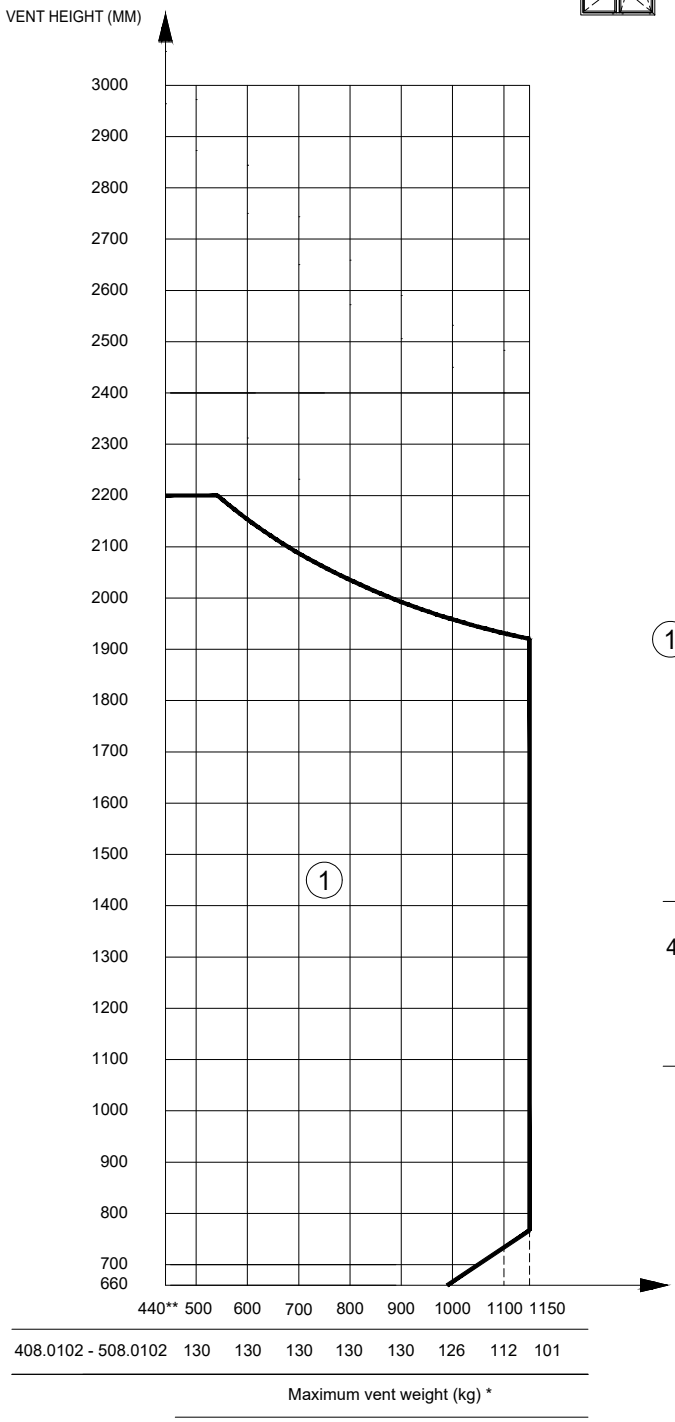

① 408.0102.XX + 408.0105.XX
508.0102.XX + 508.0105.XX

4/C3/9A — 1200 PA DESIGN WIND LOAD
600 PA WATER TIGHTNESS

	440**	500	600	700	800	900	1000	1100	1150
408.0102 - 508.0102	130	130	130	130	130	130	126	112	101

Maximum vent weight (kg) *

* THE SPECIFIED VENT WEIGHT IS ONLY POSSIBLE WHEN THE CHOSEN ACCESSORIES CAN WITHSTAND THIS LOAD.

** FB2 MIN 400MM POSSIBLE (CLAMPING PIECES)

MAXIMAL DIMENSIONS SOBINCO

MAX. ADMISSIBLE SIZES

MASTERLINE 8-De, MASTERLINE 8-Fu, MASTERLINE 8-Re

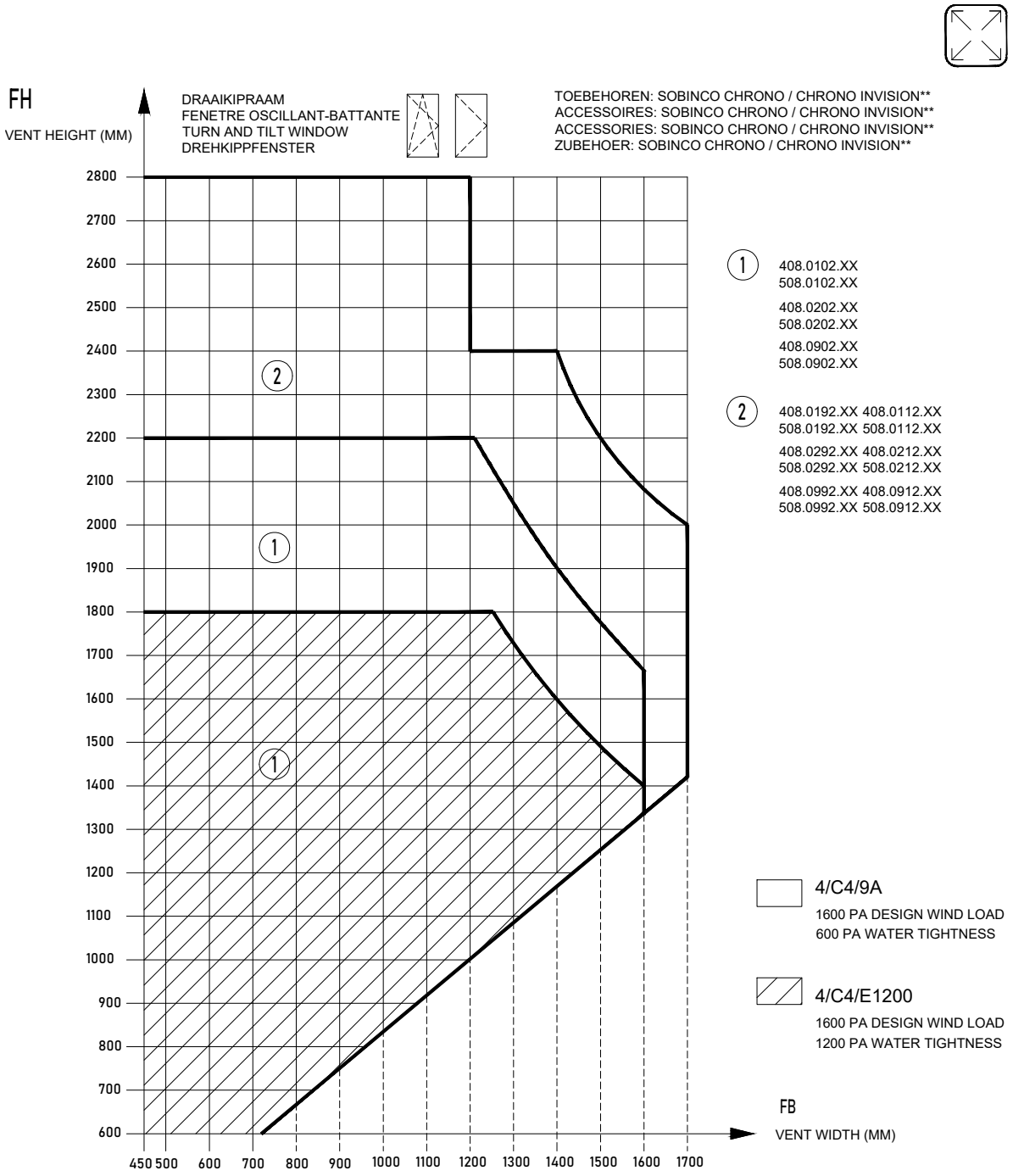

Maximum vent weight (kg) *													
408.0102 - 508.0102	140	140	140	140	140	126	112	101	92	83	77	71	
408.0192 - 508.0192	200	200	200	200	200	200	200	200	200	200	200	187	174
408.0112 - 508.0112	200	200	200	200	200	200	200	200	200	200	200	200	200

* THE SPECIFIED VENT WEIGHT IS ONLY POSSIBLE WHEN THE CHOSEN ACCESSORIES CAN WITHSTAND THIS LOAD.
** FOR SOBINCO CHRONO PLUS / SOBINCO CHRONO SAFE / SOBINCO CHRONO SAFE INVISION > SEE "OPENING WINDOWS"

MAXIMAL DIMENSIONS SOBINCO

MAX. ADMISSIBLE SIZES

MASTERLINE 8-De, MASTERLINE 8-Fu, MASTERLINE 8-Re

STOLPRAAM
FENETRE DOUBLE OUVRANTE
DOUBLE CASEMENT WINDOW
STULP-DREHFENSTER

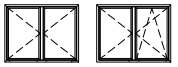



TOEBEHOREN: SOBINCO CHRONO / CHRONO INVISION**
ACCESSOIRES: SOBINCO CHRONO / CHRONO INVISION**
ACCESSORIES: SOBINCO CHRONO / CHRONO INVISION**
ZUBEHOER: SOBINCO CHRONO / CHRONO INVISION**

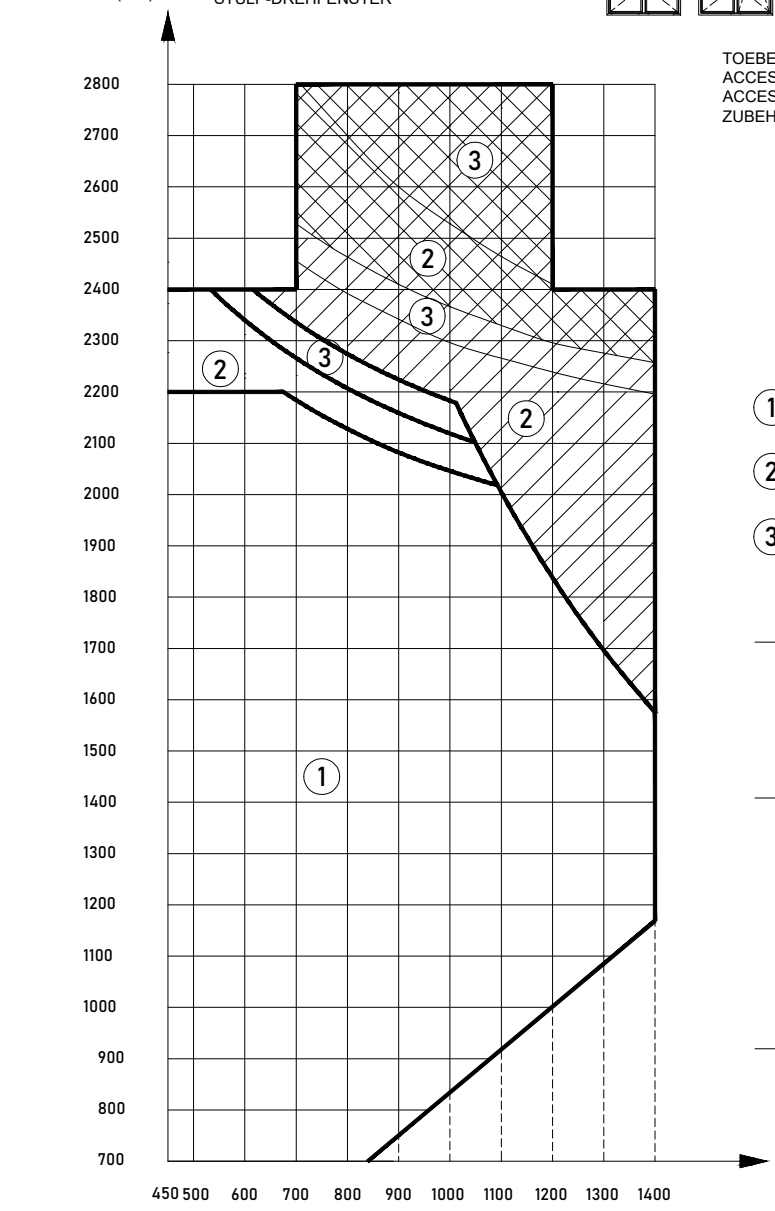

408.0X02 - 508.0X02	140	140	140	140	140	126	112	101	92	83
408.0X92 - 508.0X92	170	170	170	170	170	170	170	170	170	170
408.0X12 - 508.0X12	170	170	170	170	170	170	170	170	170	170

Maximum vent weight (kg) *

1	408.0102.XX 508.0102.XX	408.0202.XX 508.0202.XX	408.0902.XX 508.0902.XX
2	408.0192.XX 508.0192.XX	408.0292.XX 508.0292.XX	408.0992.XX 508.0992.XX
3	408.0112.XX 508.0112.XX	408.0212.XX 508.0212.XX	408.0912.XX 508.0912.XX

4/B3/8A	1200 PA DESIGN WIND LOAD 450 PA WATER TIGHTNESS
	Additional locking points at central closure - Solution with internal gearbox (central lock)
4/C3/9A	1200 PA DESIGN WIND LOAD 600 PA WATER TIGHTNESS
	Additional locking points at central closure - Solution with internal gearbox (central lock)
	Standard

* THE SPECIFIED VENT WEIGHT IS ONLY POSSIBLE WHEN THE CHOSEN ACCESSORIES CAN WITHSTAND THIS LOAD.
** FOR SOBINCO CHRONO PLUS / SOBINCO CHRONO SAFE / SOBINCO CHRONO SAFE INVISION > SEE "OPENING WINDOWS"

MAXIMAL DIMENSIONS SOBINCO

MAX. ADMISSIBLE SIZES

MASTERLINE 8-De, MASTERLINE 8-Fu, MASTERLINE 8-Re

GEINTEGREERDE STOLPRAAM
FENETRE DOUBLE OUVRANTE INTEGREE
INTEGRATED DOUBLE CASEMENT WINDOW
INTEGRIERTE STULP-DREHFENSTER

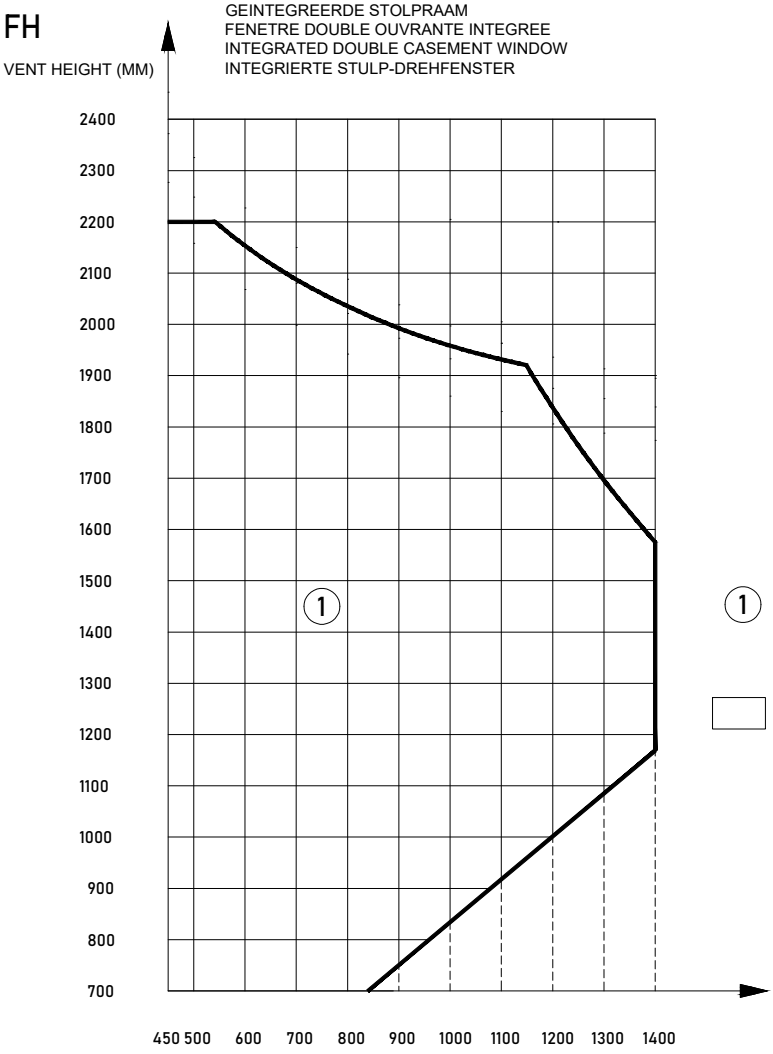

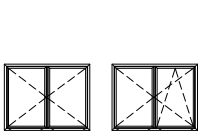

TOEBEHOREN: SOBINCO CHRONO / CHRONO INVISION**
ACCESSOIRES: SOBINCO CHRONO / CHRONO INVISION**
ACCESSORIES: SOBINCO CHRONO / CHRONO INVISION**
ZUBEHOER: SOBINCO CHRONO / CHRONO INVISION**

① 408.0102.XX
408.0105.XX

4/C3/9A

1200 PA DESIGN WIND LOAD
600 PA WATER TIGHTNESS

408.0102	140	140	140	140	140	140	126	112	101	92	83

Maximum vent weight (kg) *

* THE SPECIFIED VENT WEIGHT IS ONLY POSSIBLE WHEN THE CHOSEN ACCESSORIES CAN WITHSTAND THIS LOAD.
** FOR SOBINCO CHRONO PLUS / SOBINCO CHRONO SAFE / SOBINCO CHRONO SAFE INVISION > SEE "OPENING WINDOWS"

MAXIMAL DIMENSIONS SOBINCO

MAX. ADMISSIBLE SIZES

MASTERLINE 8-De, MASTERLINE 8-Fu, MASTERLINE 8-Re

VALRAAM - KRUK VER.
FENETRE BATTANTE - POIGNEE VER.
TILT WINDOW - HANDLE VER.
KIPFENSTER - GRIFFE VER.

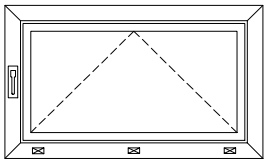

SCHARNIER
PAUMELLE
HINGE
BAND

Accessories: Sobinco/Siegenia
Zubehör: Sobinco/Siegenia
Toebehoren: Sobinco/Siegenia
Quincaillerie: Sobinco/Siegenia

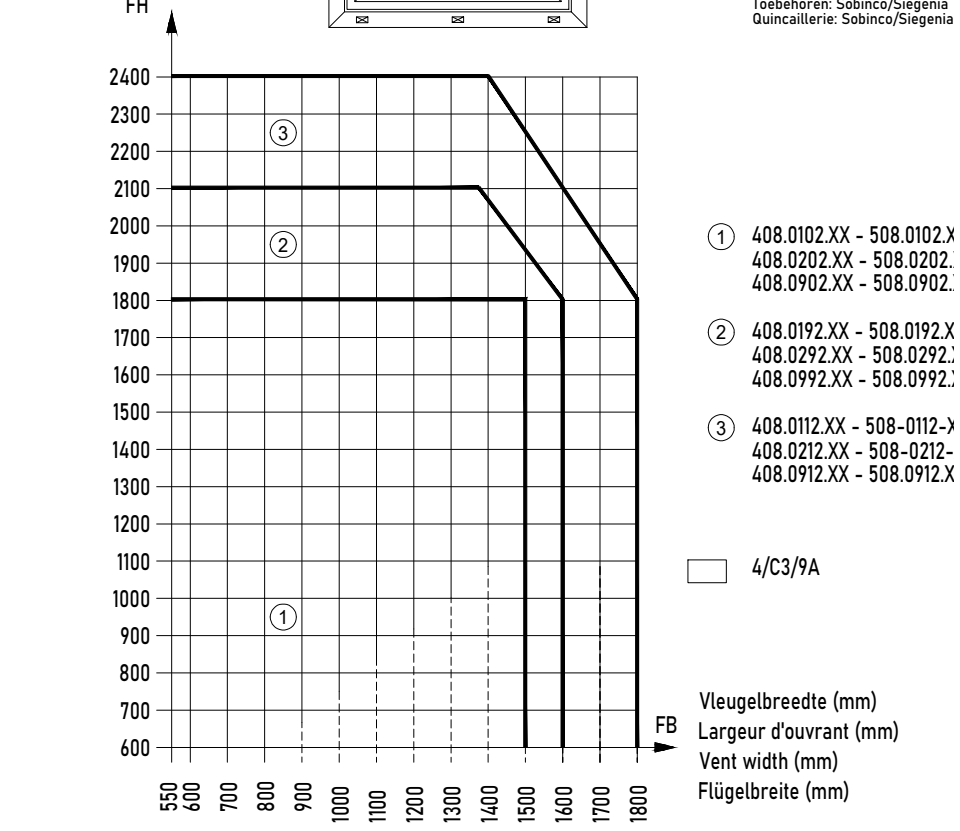

① 408.0102.XX - 508.0102.X
408.0202.XX - 508.0202.
408.0902.XX - 508.0902.

② 408.0192.XX - 508.0192.X
408.0292.XX - 508.0292.
408.0992.XX - 508.0992.

③ 408.0112.XX - 508-0112-X
408.0212.XX - 508-0212-
408.0912.XX - 508.0912.X

4/C3/9A

Positie and sluitpuntenaantal : zie cataloog " Opening systems "
Position et Nombre de points de verrouillage: voire catalogue " Opening systems "
Position and number of locking points: see catalogue " Opening systems "
Position and anzahl der Schliesspunkte: siehe katalog " Opening systems "

Lucht doordringbaarheid: Klasse4	Perméabilité à l'air: Classe4	Air permeability: Class4	Air Durchlässigkeit: Klasse4
Waterdichtheid: Klasse 9A	Etanchéité à l'eau: Classe 9A	Watertightness: Class 9A	Wasserdichtigkeit: Klasse 9A
Wind weerstand : klasse C3	Résistance au vent: Classe C3	Wind Resistance: Class C3	Luftwiderstand : Klasse C3

MAXIMAL DIMENSIONS SOBINCO

MAX. ADMISSIBLE SIZES

MASTERLINE 8-De, MASTERLINE 8-Fu, MASTERLINE 8-Re

VALRAAM - KRUK HOR.
FENETRE BATTANTE - POIGNEE HOR.
TILT WINDOW - HANDLE HOR.
KIPFENSTER - GRIFFE HOR.

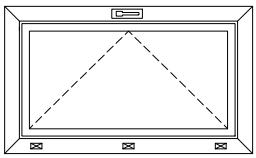

SCHARNIER
PAUMELLE
HINGE
BAND

Accessories: Sobinco/Siegenia
Zubehör: Sobinco/Siegenia
Toebehoren: Sobinco/Siegenia
Quincaillerie: Sobinco/Siegenia

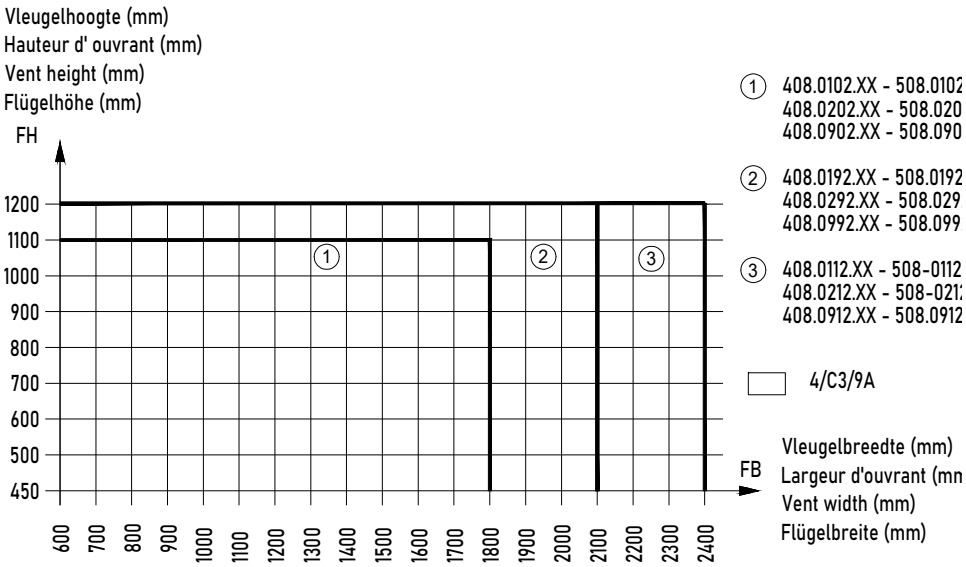

Positie and sluitpuntenaantal : zie cataloog " Opening systems "
Position et Nombre de points de verrouillage: voire catalogue " Opening systems "
Position and number of locking points: see catalogue " Opening systems "
Position and anzahl der Schliesspunkte: siehe katalog " Opening systems "

Lucht doordringbaarheid: Klasse4
Waterdichtheid: Klasse 9A
Wind weerstand : klasse C3

Perméabilité à l'air: Classe4
Etanchéité à l'eau: Classe 9A
Résistance au vent: Classe C3

Air permeability: Class4
Watertightness: Class 9A
Wind Resistance: Class C3

Air Durchlässigkeit: Klasse4
Wasserdichtigkeit: Klasse 9A
Luftwiderstand : Klasse C3

Accessories: Sobinco/Siegenia
Zubehör: Sobinco/Siegenia
Toebehoren: Sobinco/Siegenia
Quincaillerie: Sobinco/Siegenia

MAXIMAL DIMENSIONS SOBINCO

MAX. ADMISSIBLE SIZES

MASTERLINE 8-De, MASTERLINE 8-Fu, MASTERLINE 8-Re

VALRAAM BUITENDRAAIEND - KRUK HOR.
FENETRE BATTANTE VERS A L'EXTERIEUR - POIGNEE HOR.
BOTTOM HUNG WINDOW OUTWARD OPENING - HANDLE HOR.
KIPFENSTER AUSWARTS OFFNEND - GRIFFE HOR.

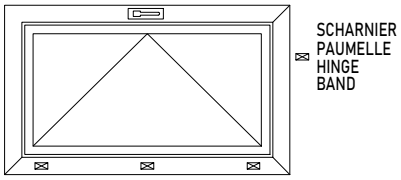

Vleugelhoogte (mm)
Hauteur d' ouvrant (mm)
Vent height (mm)
Flügelhöhe (mm)

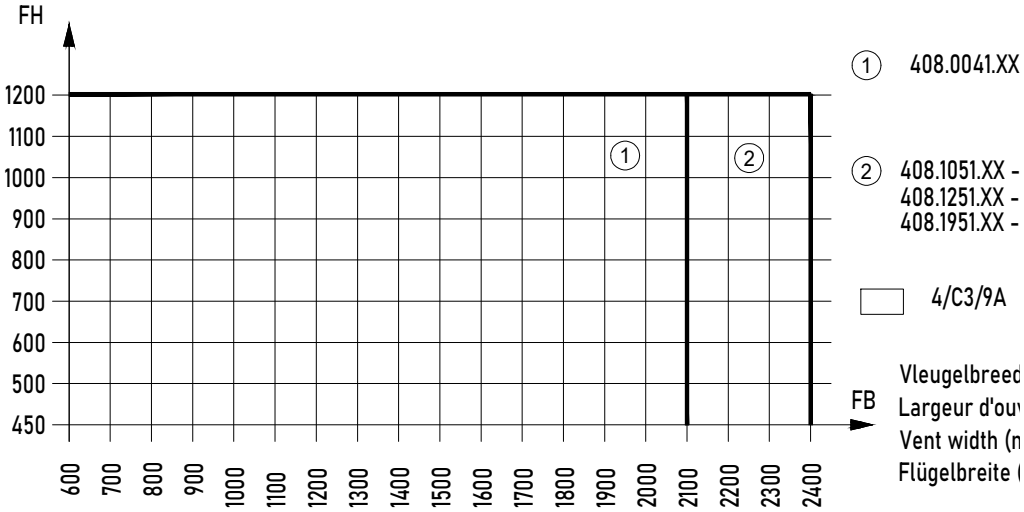

Positie and sluitpuntenaantal : zie cataloog " Opening systems "
Position et Nombre de points de verrouillage: voire catalogue " Opening systems "
Position and number of locking points: see catalogue " Opening systems "
Position und anzahl der Schliesspunkte: siehe katalog " Opening systems "

Lucht doordringbaarheid: Klasse4	Perméabilité à l'air: Classe4	Air permeability: Class4	Air Durchlässigkeit: Klasse4
Waterdichtheid: Klasse 9A	Etanchéité à l'eau: Classe 9A	Watertightness: Class 9A	Wasserdichtigkeit: Klasse 9A
Wind weerstand : klasse C3	Résistance au vent: Classe C3	Wind Resistance: Class C3	Luftwiderstand : Klasse C3

MAXIMAL DIMENSIONS SOBINCO

MAX. ADMISSIBLE SIZES

MASTERLINE 8-De, MASTERLINE 8-Fu, MASTERLINE 8-Re

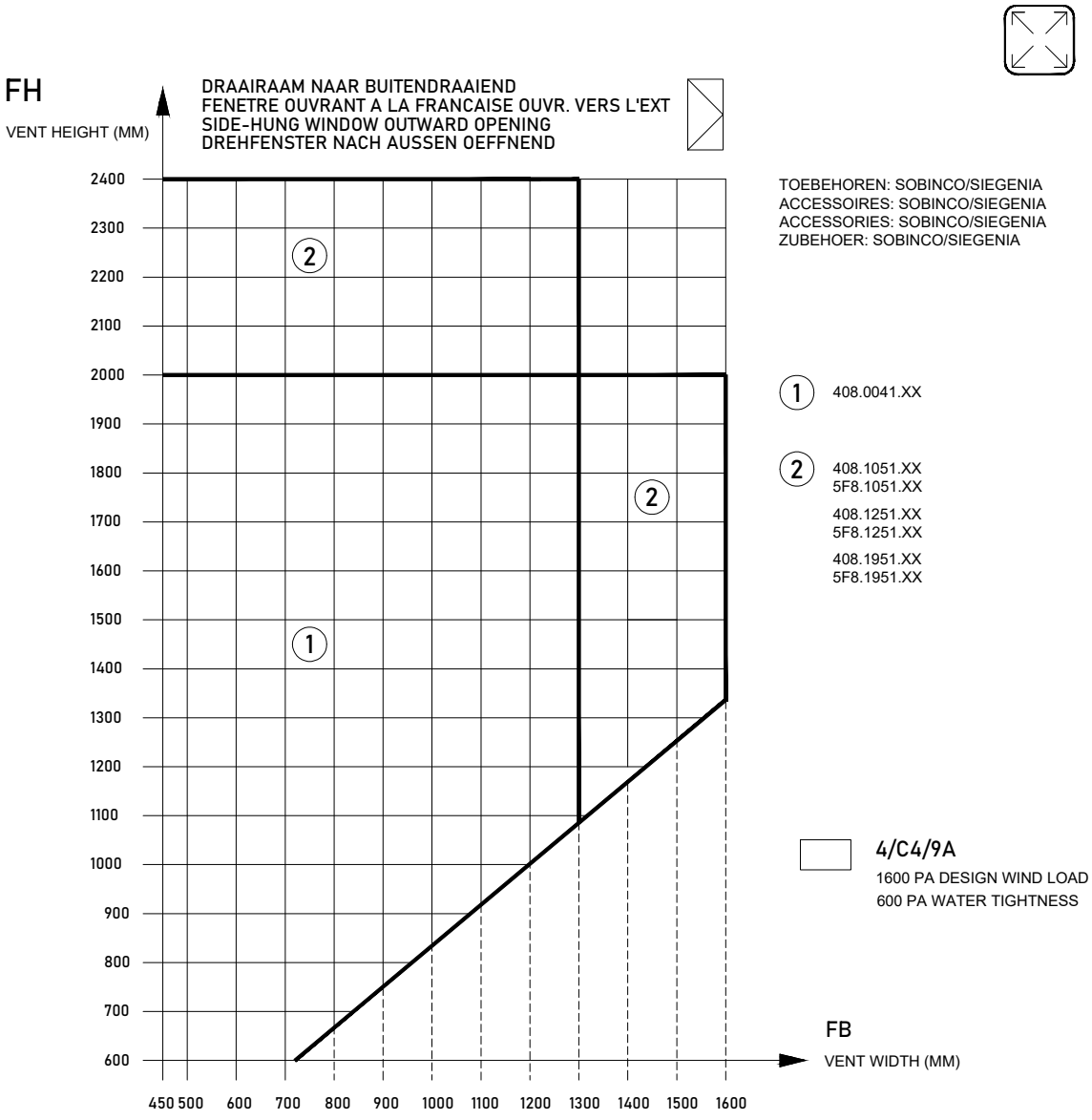

Max. vleugelgewicht Axxent = 130 kg	Poids d' ouvrant max. Axxent = 130 kg	Max. vent weight Axxent = 130 kg	Höchstflügelgewicht Axxent = 130 kg
Max. vleugelgewicht Invision = 130 kg	Poids d' ouvrant max. Invision = 130 kg	Max. vent weight Invision = 130 kg	Höchstflügelgewicht Invision = 130 kg

MAXIMAL DIMENSIONS SOBINCO

MAX. ADMISSIBLE SIZES

MASTERLINE 8-De, MASTERLINE 8-Fu, MASTERLINE 8-Re

TUIMEL- EN TAATSRAAM
FENETRE PIVOTANTE
PIVOT WINDOW
SCHWINGFLUEGEL

CHRONO 200 kg

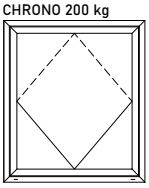



TOEBEHOREN SOBINCO
ACCESSOIRES SOBINCO
ACCESSORIES SOBINCO
ZUBEHOER SOBINCO

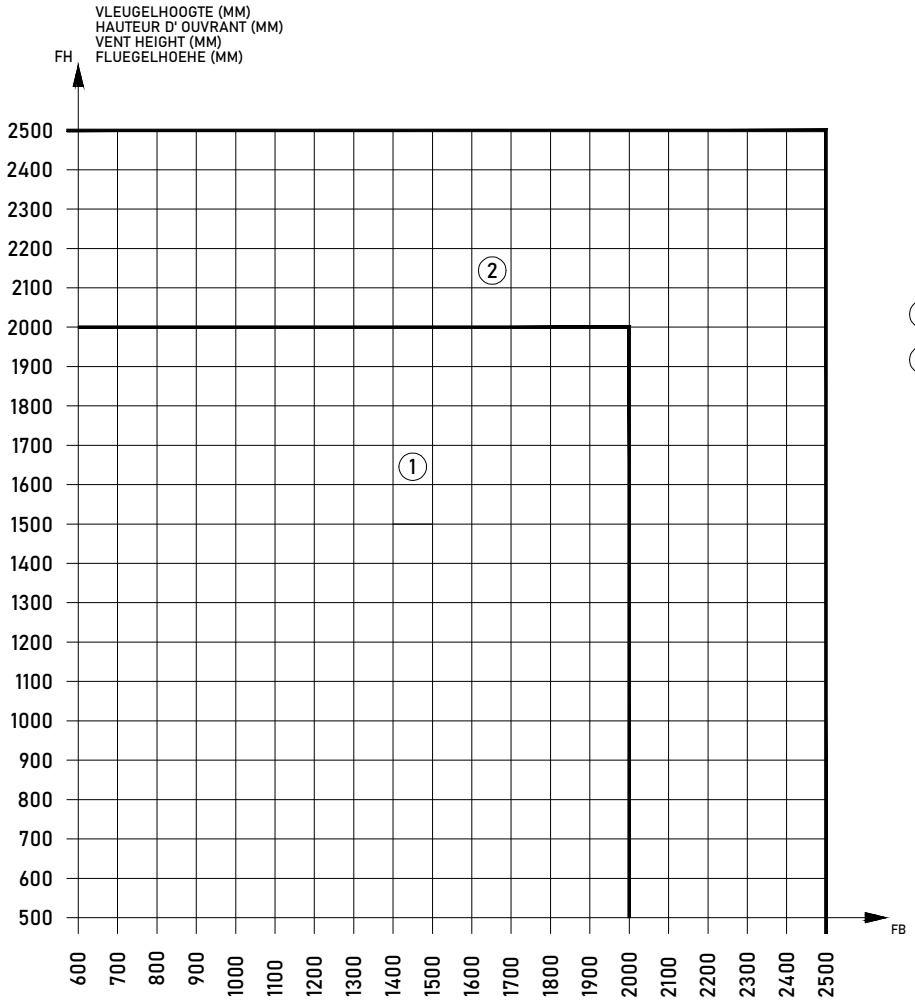

① 108.0792.XX

② 108.0712.XX

4/C4/9A

108.0792.XX	200	200	200	200	200	200	200	200	195	176	160	147	135	125	116	107	100	93	87	80
108.0712.XX	200	200	200	200	200	200	200	200	200	200	200	200	187	170	156	143	132	123	114	106
	Maximum vent weight (kg)																			

MAXIMAL DIMENSIONS SIEGENIA

MAX. ADMISSIBLE SIZES

MASTERLINE 8-De, MASTERLINE 8-Fu, MASTERLINE 8-Re



FH

VENT HEIGHT (MM)

DRAAIKIPRAAM
FENETRE OSCILLANT-BATTANTE
TURN AND TILT WINDOW
DREHKIPPFENSTER

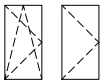

TOEBEHOREN: SIEGENIA Alu 5200 / AXXENT PLUS
ACCESSOIRES: SIEGENIA Alu 5200 / AXXENT PLUS
ACCESSORIES: SIEGENIA Alu 5200 / AXXENT PLUS
ZUBEHOER: SIEGENIA Alu 5200 / AXXENT PLUS

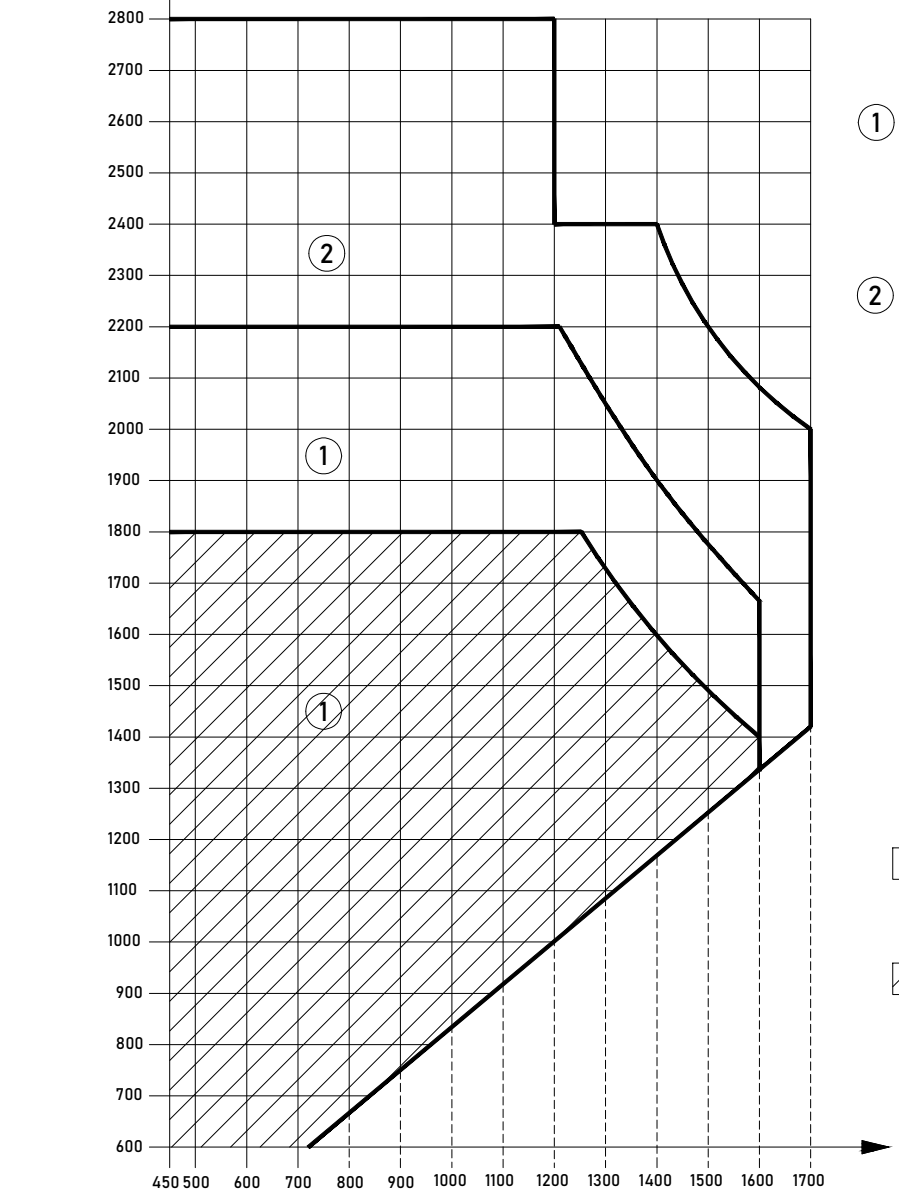

1 408.0102.XX 508.0102.XX 408.0202.XX 508.0202.XX 408.0902.XX 508.0902.XX

2 408.0192.XX 408.0112.XX 508.0192.XX 508.0112.XX 408.0292.XX 408.0212.XX 508.0292.XX 508.0212.XX 408.0992.XX 408.0912.XX 508.0992.XX 508.0912.XX

4/C4/9A
1600 PA DESIGN WIND LOAD
600 PA WATER TIGHTNESS

4/C4/E1200
1600 PA DESIGN WIND LOAD
1200 PA WATER TIGHTNESS

Maximum vent weight (kg) *													
408.0102 - 508.0102	140	140	140	140	140	126	112	101	92	83	77	71	
408.0192 - 508.0192	150	150	150	150	150	150	150	150	150	150	150	150	150
408.0112 - 508.0112	150	150	150	150	150	150	150	150	150	150	150	150	150

* THE SPECIFIED VENT WEIGHT IS ONLY POSSIBLE WHEN THE CHOSEN ACCESSORIES CAN WITHSTAND THIS LOAD.

MAXIMAL DIMENSIONS SIEGENIA

MAX. ADMISSIBLE SIZES

MASTERLINE 8-De, MASTERLINE 8-Fu, MASTERLINE 8-Re

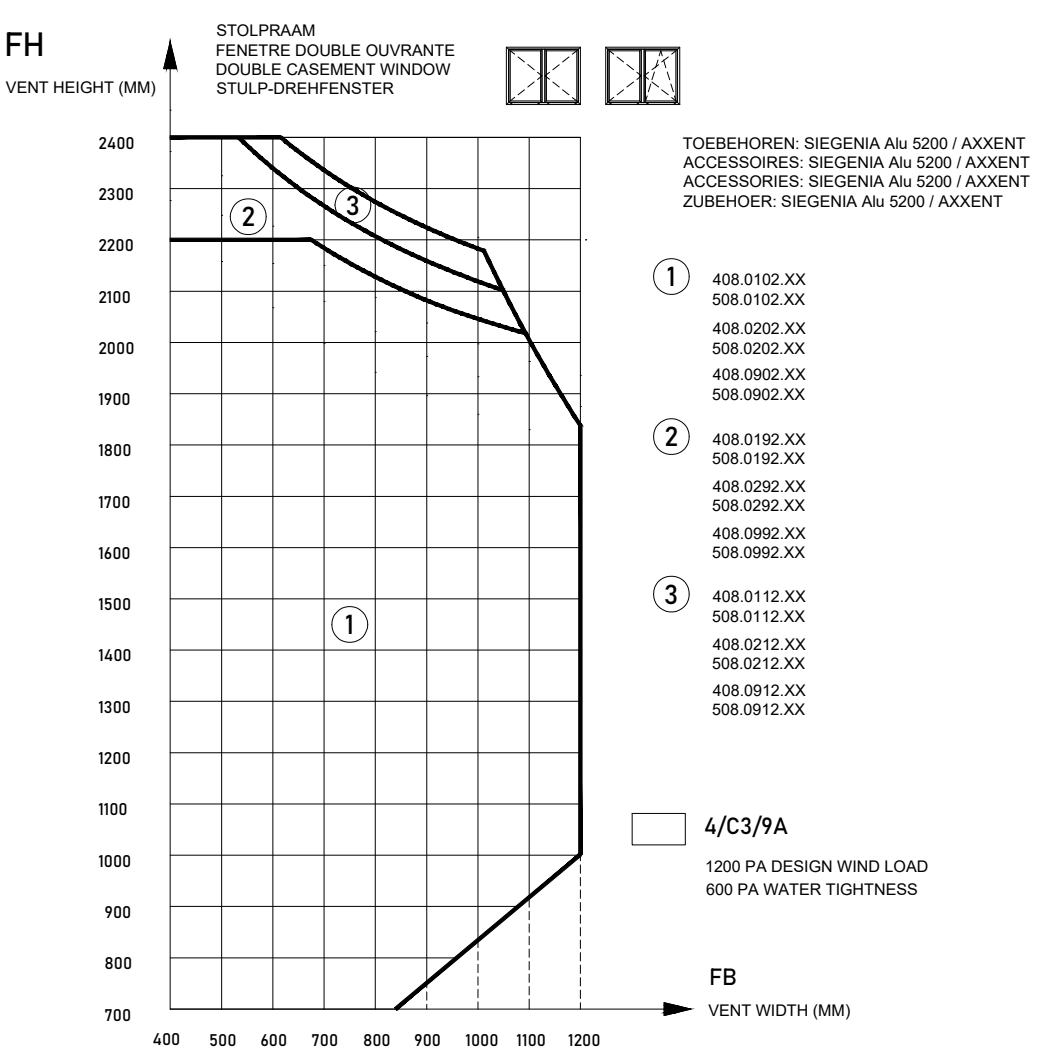

TOEBEHOREN: SIEGENIA Alu 5200 / AXXENT
ACCESSOIRES: SIEGENIA Alu 5200 / AXXENT
ACCESSORIES: SIEGENIA Alu 5200 / AXXENT
ZUBEHOER: SIEGENIA Alu 5200 / AXXENT

1
408.0102.XX
508.0102.XX
408.0202.XX
508.0202.XX
408.0902.XX
508.0902.XX

2
408.0192.XX
508.0192.XX
408.0292.XX
508.0292.XX
408.0992.XX
508.0992.XX

3
408.0112.XX
508.0112.XX
408.0212.XX
508.0212.XX
408.0912.XX
508.0912.XX

4/C3/9A

1200 PA DESIGN WIND LOAD
600 PA WATER TIGHTNESS

408.0102	130	130	130	130	130	130	126	112	101
508.0102	130	130	130	130	130	130	126	112	101
408.0192	130	130	130	130	130	130	130	130	130
508.0192	130	130	130	130	130	130	130	130	130
408.0112	130	130	130	130	130	130	130	130	130
508.0112	130	130	130	130	130	130	130	130	130

Maximum vent weight (kg) *

* THE SPECIFIED VENT WEIGHT IS ONLY POSSIBLE WHEN THE CHOSEN ACCESSORIES CAN WITHSTAND THIS LOAD.

MAXIMAL DIMENSIONS SIEGENIA

MAX. ADMISSIBLE SIZES

MASTERLINE 8-De, MASTERLINE 8-Fu, MASTERLINE 8-Re

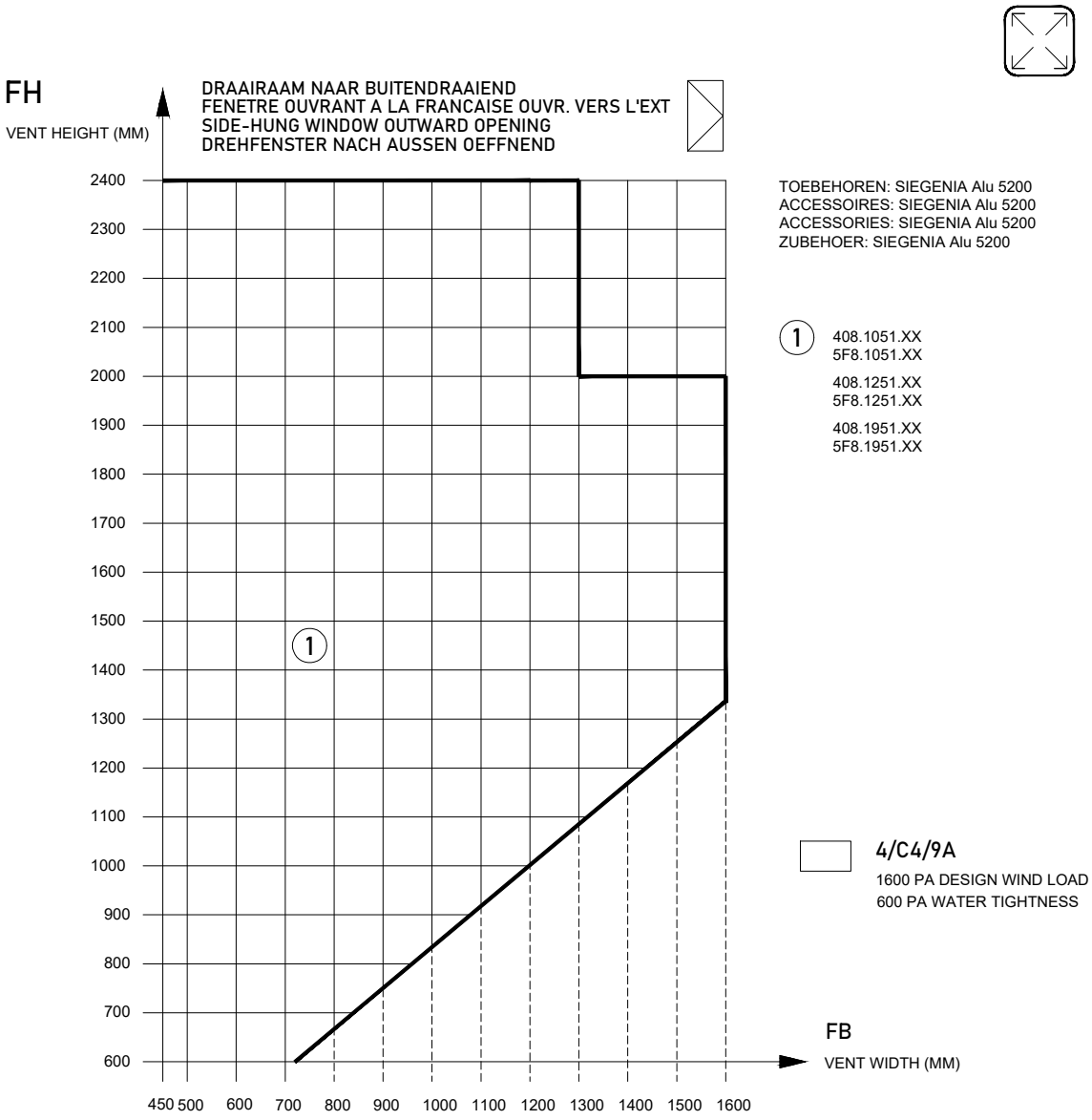

Max. vleugelgewicht Axxent = 130 kg	Poids d' ouvrant max. Axxent = 130 kg	Max. vent weight Axxent = 130 kg	Höchstflügelgewicht Axxent = 130 kg
Max. vleugelgewicht Invision = 170 kg	Poids d' ouvrant max. Invision = 170 kg	Max. vent weight Invision = 170 kg	Höchstflügelgewicht Invision = 170 kg

MAXIMAL DIMENSIONS ERRETI

MAX. ADMISSIBLE SIZES

MASTERLINE 8-De, MASTERLINE 8-Fu, MASTERLINE 8-Re

DRAAIKIPRAAM
FENETRE OSCILLANT-BATTANTE
TURN AND TILT WINDOW
DREHKIPPFENSTER

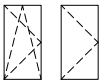

TOEBEHOREN: ERRETI RINOVA GTT
ACCESSOIRES: ERRETI RINOVA GTT
ACCESSORIES: ERRETI RINOVA GTT
ZUBEHOER: ERRETI RINOVA GTT

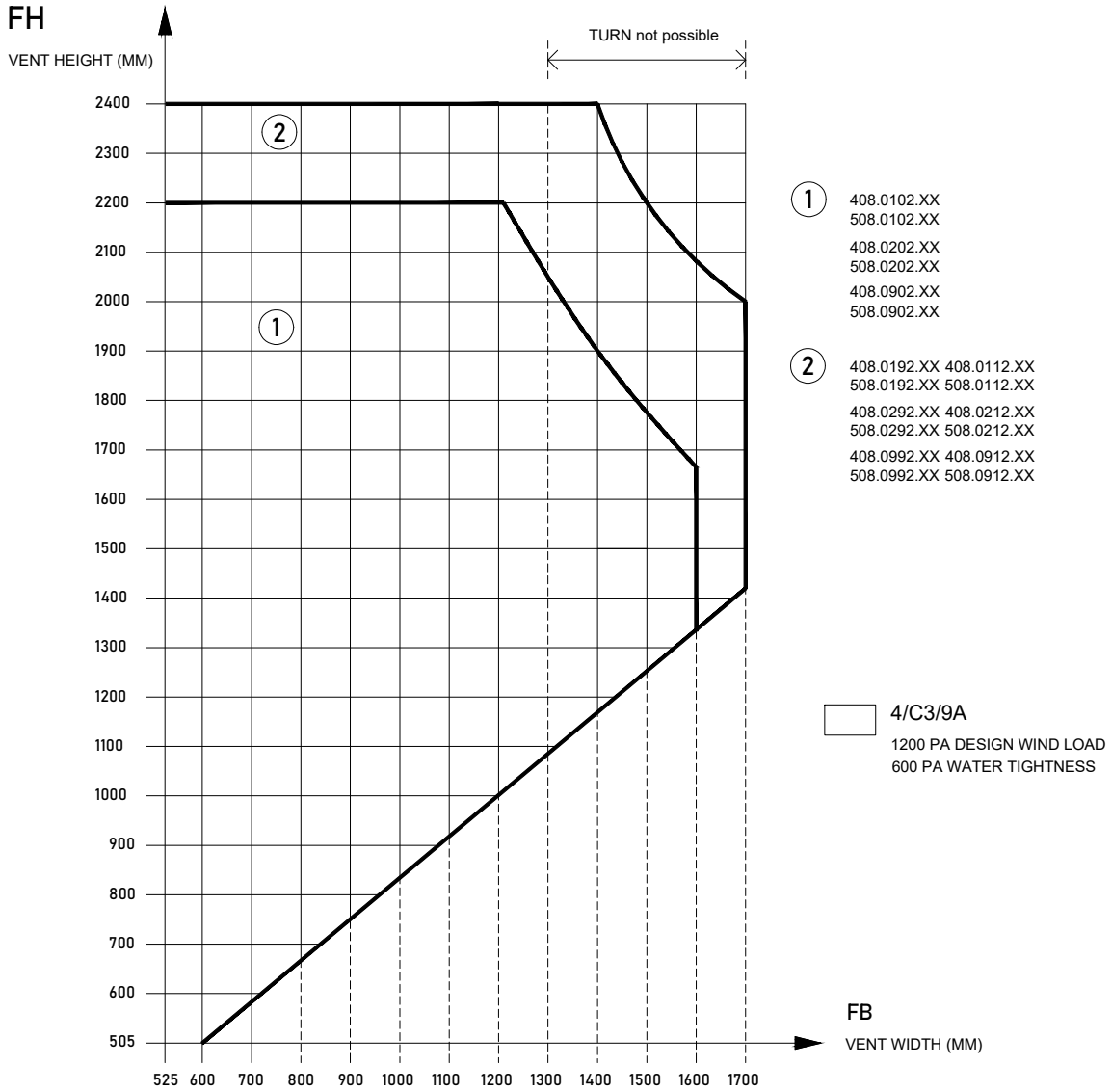

1 408.0102.XX
508.0102.XX
408.0202.XX
508.0202.XX
408.0902.XX
508.0902.XX

2 408.0192.XX 408.0112.XX
508.0192.XX 508.0112.XX
408.0292.XX 408.0212.XX
508.0292.XX 508.0212.XX
408.0992.XX 408.0912.XX
508.0992.XX 508.0912.XX

4/C3/9A
1200 PA DESIGN WIND LOAD
600 PA WATER TIGHTNESS

Maximum vent weight (kg) *													
408.0102 - 508.0102	120	120	120	120	120	120	112	101	92	83	77	71	
408.0192 - 508.0192	120	120	120	120	120	120	120	120	120	120	120	120	120
408.0112 - 508.0112	120	120	120	120	120	120	120	120	120	120	120	120	120

* THE SPECIFIED VENT WEIGHT IS ONLY POSSIBLE WHEN THE CHOSEN ACCESSORIES CAN WITHSTAND THIS LOAD.

MAXIMAL DIMENSIONS WINDOW-DOOR

MAX. ADMISSIBLE SIZES

MASTERLINE 8-De, MASTERLINE 8-Fu, MASTERLINE 8-Re

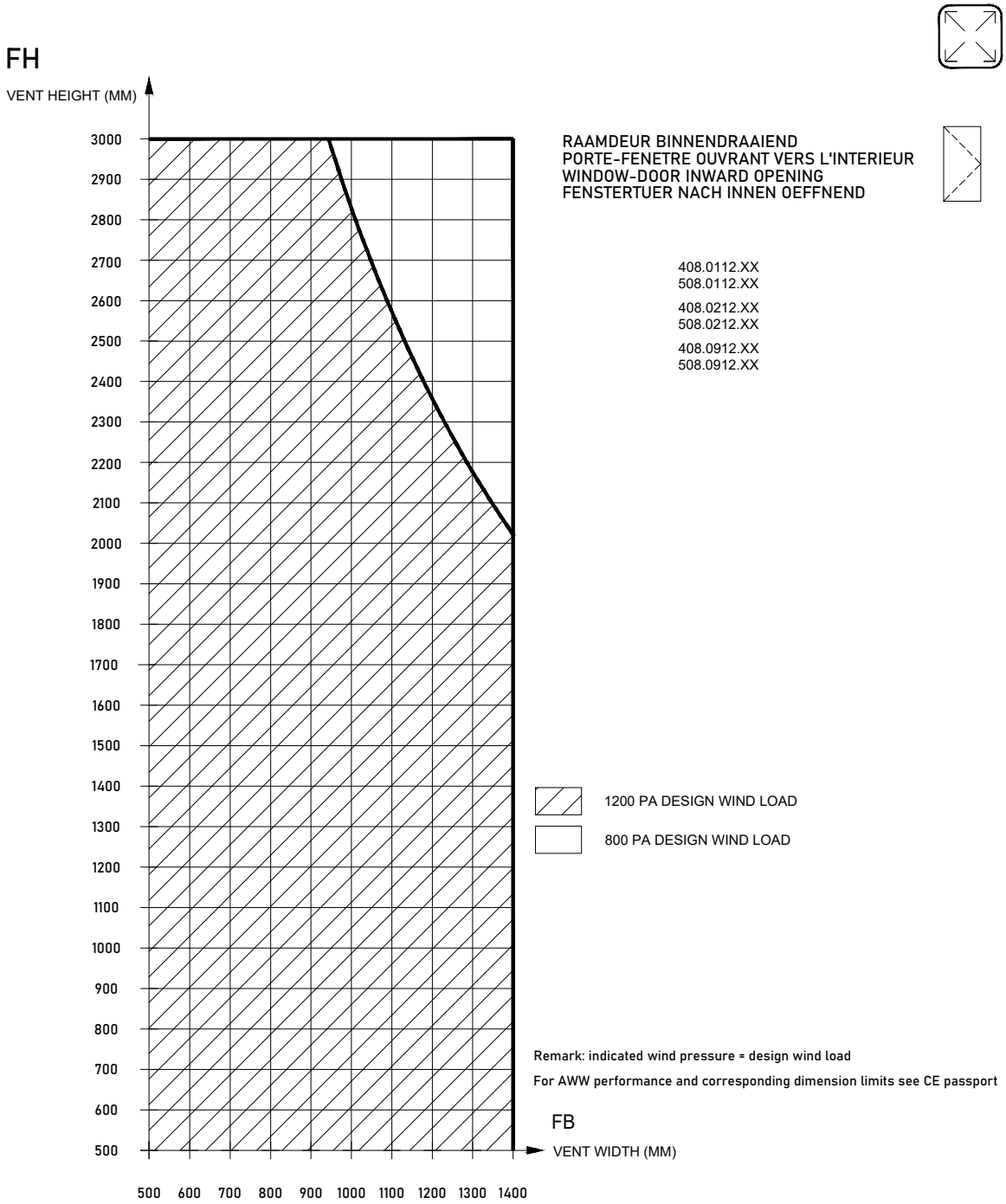

Remark: indicated wind pressure = design wind load

For AWW performance and corresponding dimension limits see CE passport

DE MAXIMALE AFMETINGEN ZIJN ENKEL GEBASEERD OP PROFIELEIGENSCHAPPEN.
ER DIENT OOK STEEDS REKENING GEHOUDEN TE WORDEN MET DE BESLAG SPECIFICATIES.
LES DIMENSIONS MAXIMALES NE SONT BASEES QUE SUR LES CARACTERISTIQUES DU PROFILE.
IL FAUT EN TOUS CAS TENIR COMPTE DES SPECIFICATIONS DE ACCESSOIRES.
THE MAXIMUM SIZES ARE ONLY BASED ON PROFILE CHARACTERISTICS.
ONE SHOULD AT ALL TIMES TAKE INTO ACCOUNT THE ACCESSORY SPECIFICATIONS.
DIE MAXIMALABMESSUNGEN SIND NUR AUF DIE PROFILEIGENSCHAFTEN BASIERT.
MAN SOLL IMMER MIT DEN ZUBEHOERSPZIFIKATIONEN RECHNEN.

MAXIMAL DIMENSIONS WINDOW-DOOR

MAX. ADMISSIBLE SIZES

MASTERLINE 8-De, MASTERLINE 8-Fu, MASTERLINE 8-Re

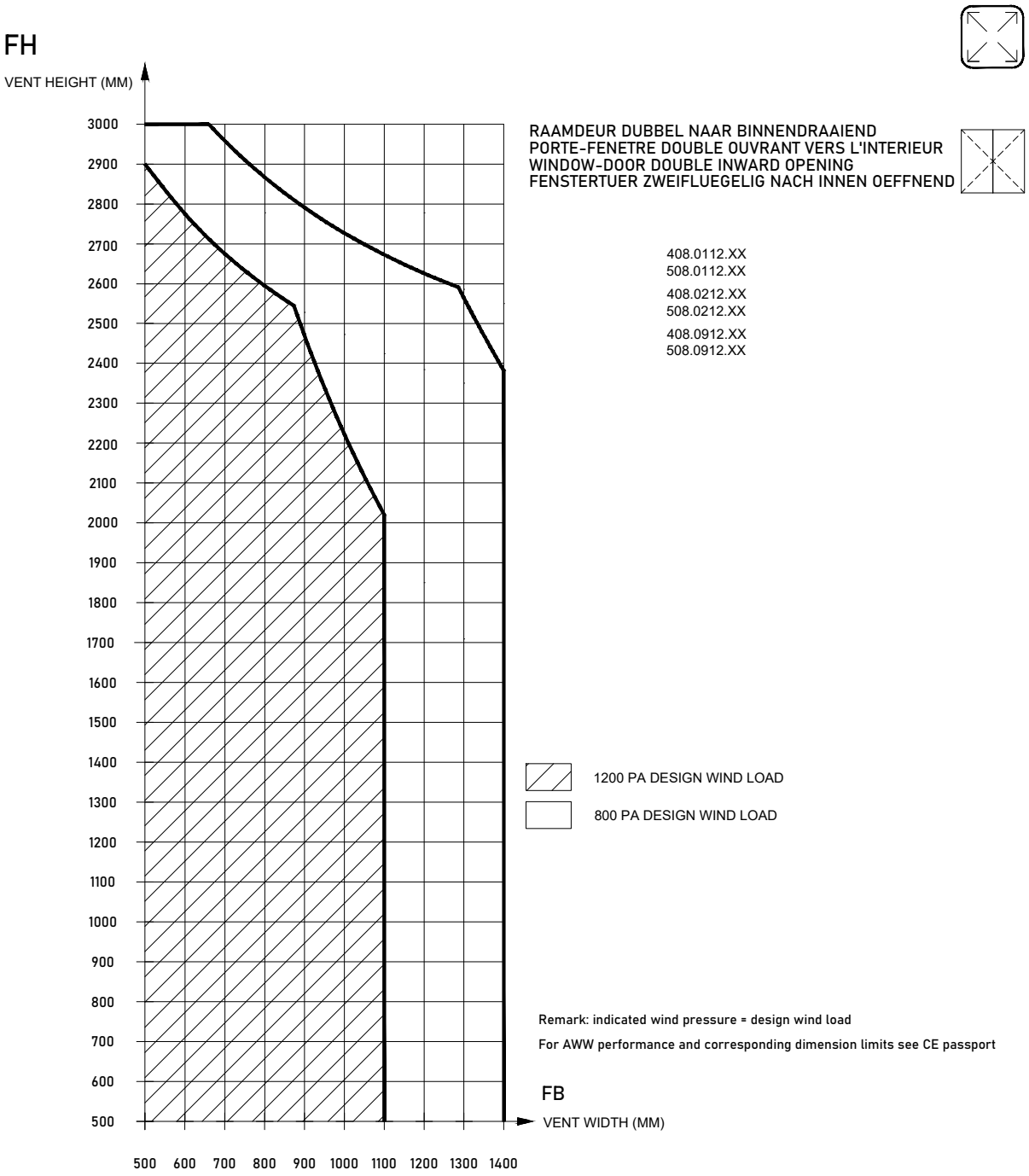

Remark: indicated wind pressure = design wind load

For AWW performance and corresponding dimension limits see CE passport

DE MAXIMALE AFMETINGEN ZIJN ENKEL GEBASEERD OP PROFIELEIGENSCHAPPEN.
ER DIENT OOK STEEDS REKENING GEHOUDEN TE WORDEN MET DE BESLAG SPECIFICATIES.
LES DIMENSIONS MAXIMALES NE SONT BASEES QUE SUR LES CARACTERISTIQUES DU PROFILE.
IL FAUT EN TOUS CAS TENIR COMPTE DES SPECIFICATIONS DE ACCESSOIRES.
THE MAXIMUM SIZES ARE ONLY BASED ON PROFILE CHARACTERISTICS.
ONE SHOULD AT ALL TIMES TAKE INTO ACCOUNT THE ACCESSORY SPECIFICATIONS.
DIE MAXIMALABMESSUNGEN SIND NUR AUF DIE PROFILEIGENSCHAFTEN BASIERT.
MAN SOLL IMMER MIT DEN ZUBEHOERSPZIFIKATIONEN RECHNEN.

MAXIMAL DIMENSIONS WINDOW-DOOR

MAX. ADMISSIBLE SIZES

MASTERLINE 8-De, MASTERLINE 8-Fu, MASTERLINE 8-Re

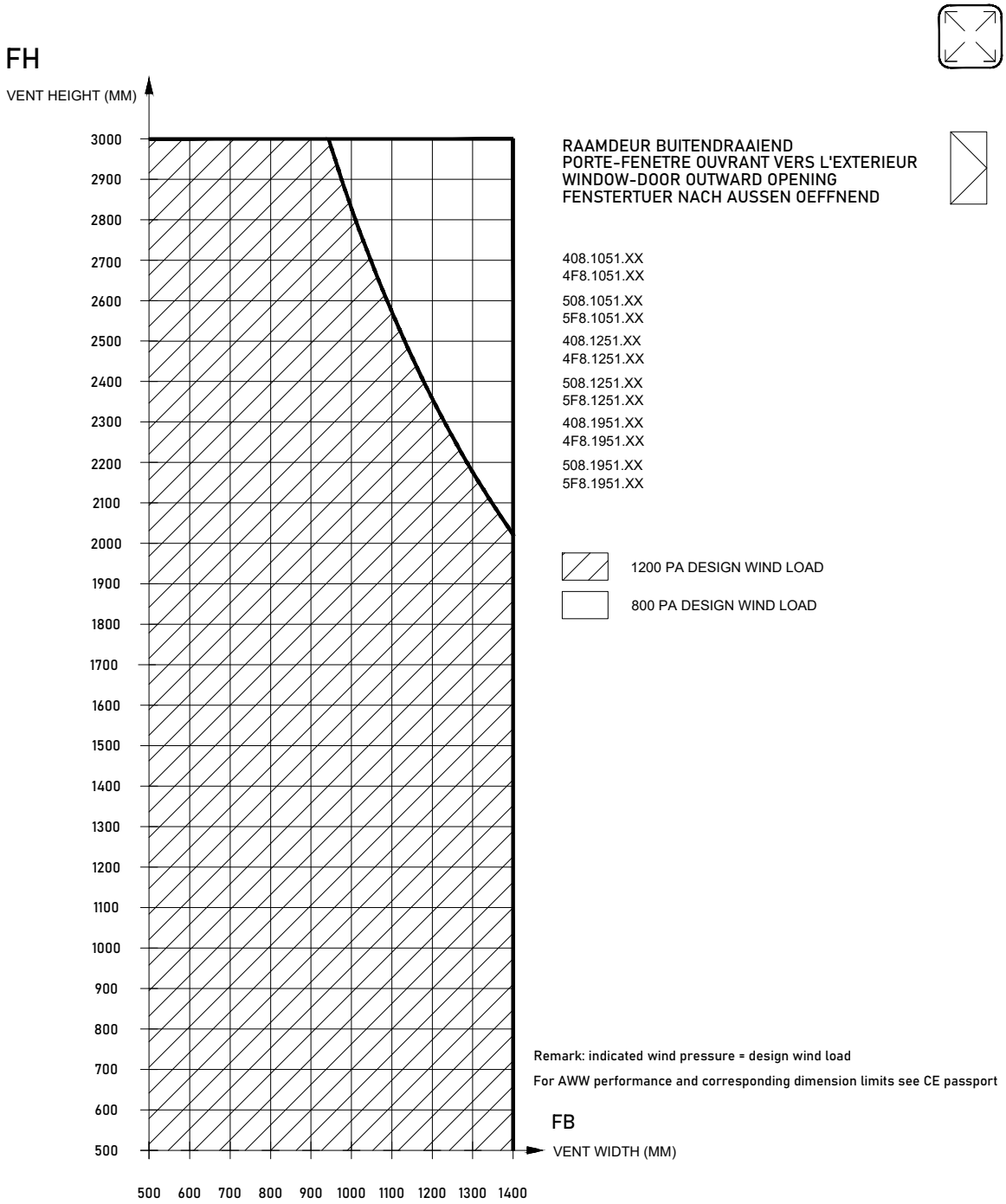

RAAMDEUR BUITENDRAAIEND
PORTE-FENETRE OUVRANT VERS L'EXTERIEUR
WINDOW-DOOR OUTWARD OPENING
FENSTERTUER NACH AUSSEN OEFFNEND

408.1051.XX
4F8.1051.XX

508.1051.XX
5F8.1051.XX

408.1251.XX
4F8.1251.XX

508.1251.XX
5F8.1251.XX

408.1951.XX
4F8.1951.XX

508.1951.XX
5F8.1951.XX

1200 PA DESIGN WIND LOAD

800 PA DESIGN WIND LOAD

Remark: indicated wind pressure = design wind load

For AWW performance and corresponding dimension limits see CE passport

DE MAXIMALE AFMETINGEN ZIJN ENKEL GEBASEERD OP PROFIELEIGENSCHAPPEN.
ER DIENT OOK STEEDS REKENING GEHOUDEN TE WORDEN MET DE BESLAG SPECIFICATIES.
LES DIMENSIONS MAXIMALES NE SONT BASEES QUE SUR LES CARACTERISTIQUES DU PROFILE.
IL FAUT EN TOUS CAS TENIR COMPTE DES SPECIFICATIONS DE ACCESSOIRES.
THE MAXIMUM SIZES ARE ONLY BASED ON PROFILE CHARACTERISTICS.
ONE SHOULD AT ALL TIMES TAKE INTO ACCOUNT THE ACCESSORY SPECIFICATIONS.
DIE MAXIMALABMESSUNGEN SIND NUR AUF DIE PROFILEIGENSCHAFTEN BASIERT.
MAN SOLL IMMER MIT DEN ZUBEHOERSPZIFIKATIONEN RECHNEN.

MAXIMAL DIMENSIONS WINDOW-DOOR

MAX. ADMISSIBLE SIZES

MASTERLINE 8-De, MASTERLINE 8-Fu, MASTERLINE 8-Re

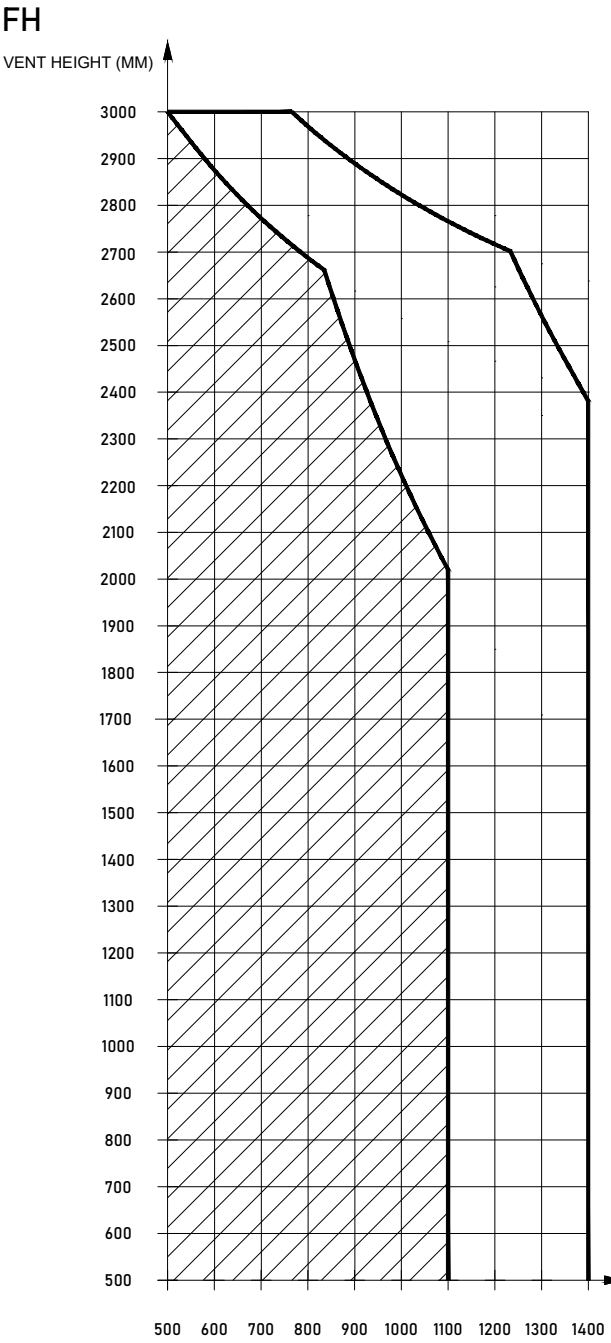

RAAMDEUR DUBBEL NAAR BUITENDRAAIEND
PORTE-FENETRE DOUBLE OUVRANT VERS L'EXTERIEUR
WINDOW-DOOR DOUBLE OUTWARD OPENING
FENSTERTUER ZWEIFLUEGELIG NACH AUSSEN OEFFNEND

408.1051.XX
4F8.1051.XX

508.1051.XX
5F8.1051.XX

408.1251.XX
4F8.0251.XX

508.1251.XX
5F8.1251.XX

408.1951.XX
4F8.1951.XX

508.1951.XX
5F8.1951.XX

1200 PA DESIGN WIND LOAD

800 PA DESIGN WIND LOAD

Remark: indicated wind pressure = design wind load

For AWW performance and corresponding dimension limits see CE passport

DE MAXIMALE AFMETINGEN ZIJN ENKEL GEBASEERD OP PROFIELEIGENSCHAPPEN.
ER DIENT OOK STEEDS REKENING GEHOUDEN TE WORDEN MET DE BESLAG SPECIFICATIES.
LES DIMENSIONS MAXIMALES NE SONT BASEES QUE SUR LES CARACTERISTIQUES DU PROFILE.
IL FAUT EN TOUS CAS TENIR COMPTE DES SPECIFICATIONS DE ACCESSOIRES.
THE MAXIMUM SIZES ARE ONLY BASED ON PROFILE CHARACTERISTICS.
ONE SHOULD AT ALL TIMES TAKE INTO ACCOUNT THE ACCESSORY SPECIFICATIONS.
DIE MAXIMALABMESSUNGEN SIND NUR AUF DIE PROFILEIGENSCHAFTEN BASIERT.
MAN SOLL IMMER MIT DEN ZUBEHOERSPZIFIKATIONEN RECHNEN.

MAXIMAL DIMENSIONS BALCONY DOOR SOBINCO

MAX. ADMISSIBLE SIZES

MASTERLINE 8-Fu

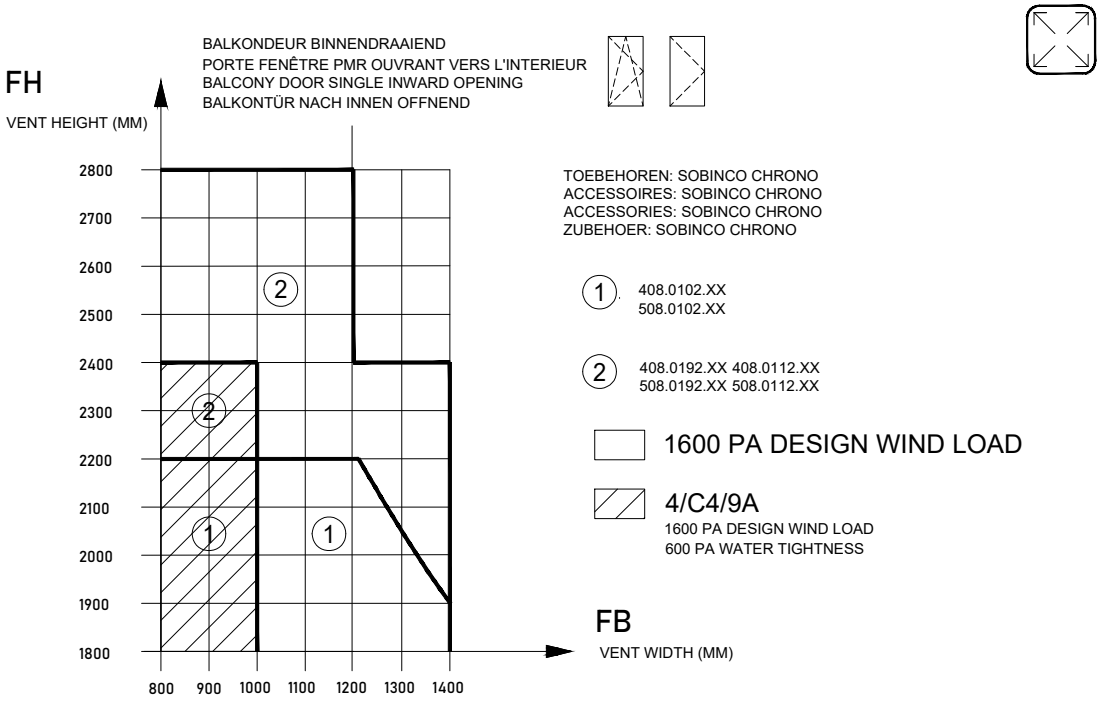

408.0102 - 508.0102	130	130	126	112	101	92	83
408.0192 - 508.0192	130	130	130	130	130	130	130
408.0112 - 508.0112	130	130	130	130	130	130	130

Maximum vent weight (kg) *

* THE SPECIFIED VENT WEIGHT IS ONLY POSSIBLE WHEN THE CHOSEN ACCESSORIES CAN WITHSTAND THIS LOAD.

MAXIMAL DIMENSIONS BALCONY DOOR SOBINCO

MAX. ADMISSIBLE SIZES

MASTERLINE 8-Fu

BALKONDEUR DUBBEL BINNENDRAAIEND
PORTE FENÊTRE PMR DOUBLE OUVRANT VERS L'INTERIEUR
BALCONY DOOR DOUBLE INWARD OPENING
BALKONTÜR DOPPEL NACH INNEN OFFNEND







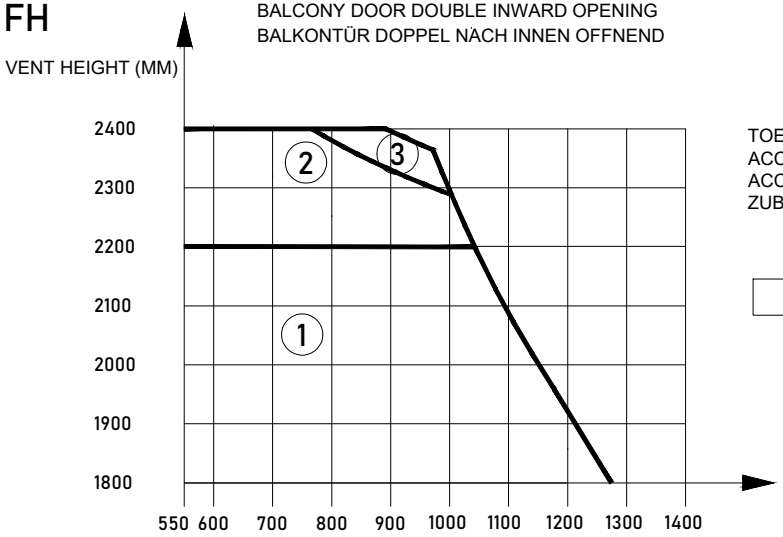

TOEBEHOREN: SOBINCO CHRONO
ACCESSOIRES: SOBINCO CHRONO
ACCESSORIES: SOBINCO CHRONO
ZUBEHOER: SOBINCO CHRONO

4/C3/9A
1200 PA DESIGN WIND LOAD
600 PA WATER TIGHTNESS

1 408.0102.XX
508.0102.XX

2 408.0192.XX
508.0192.XX

3 408.0112.XX
508.0112.XX

Maximum vent weight (kg) *										
408.0102 - 508.0102	130	130	130	130	130	126	112	101	92	83
408.0192 - 508.0192	130	130	130	130	130	130	130	130	130	130
408.0112 - 508.0112	130	130	130	130	130	130	130	130	130	130

* THE SPECIFIED VENT WEIGHT IS ONLY POSSIBLE WHEN THE CHOSEN ACCESSORIES CAN WITHSTAND THIS LOAD.

MAXIMAL DIMENSIONS BALCONY DOOR SIEGENIA

MAX. ADMISSIBLE SIZES

MASTERLINE 8-Fu

BALKONDEUR BINNENDRAAIEND
PORTE FENÊTRE PMR OUVRANT VERS L'INTERIEUR
BALCONY DOOR SINGLE INWARD OPENING
BALKONTÜR NACH INNEN OFFNEND

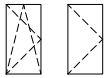

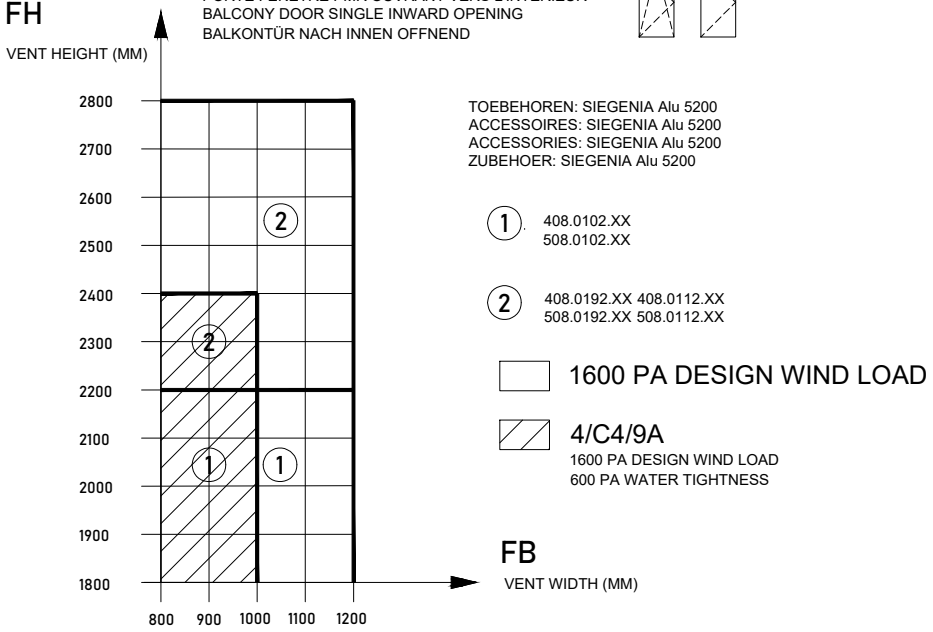

TOEBEHOREN: SIEGENIA Alu 5200
ACCESSOIRES: SIEGENIA Alu 5200
ACCESSORIES: SIEGENIA Alu 5200
ZUBEHOER: SIEGENIA Alu 5200

1. 408.0102.XX
508.0102.XX

2. 408.0192.XX 408.0112.XX
508.0192.XX 508.0112.XX

1600 PA DESIGN WIND LOAD

4/C4/9A
1600 PA DESIGN WIND LOAD
600 PA WATER TIGHTNESS

Maximum vent weight (kg) *					
408.0102 - 508.0102	130	130	126	112	101
408.0192 - 508.0192	130	130	130	130	130
408.0112 - 508.0112	130	130	130	130	130

* THE SPECIFIED VENT WEIGHT IS ONLY POSSIBLE WHEN THE CHOSEN ACCESSORIES CAN WITHSTAND THIS LOAD.

MAXIMAL DIMENSIONS BALCONY DOOR SIEGENIA

MAX. ADMISSIBLE SIZES

MASTERLINE 8-Fu

BALKONDEUR DUBBEL BINNENDRAAIEND
PORTE FENÊTRE PMR DOUBLE OUVRANT VERS L'INTERIEUR
BALCONY DOOR DOUBLE INWARD OPENING
BALKONTÜR DOPPEL NACH INNEN OFFNEND

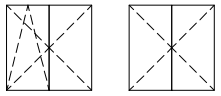

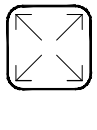

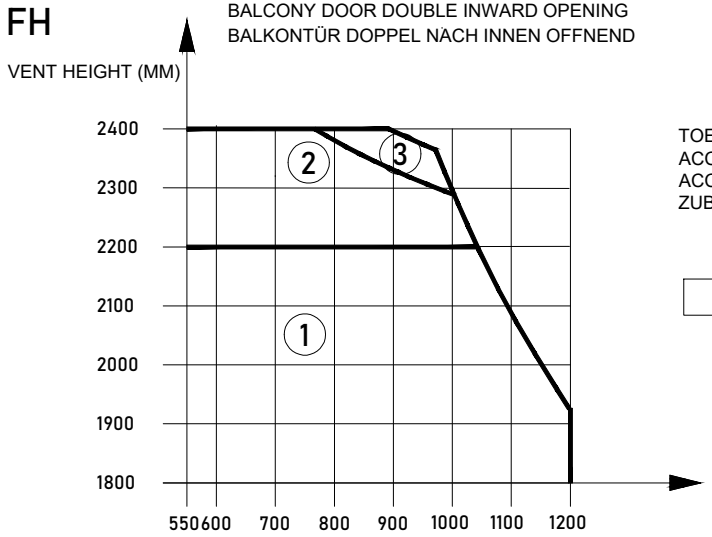

TOEBEHOREN: SIEGENIA Alu 5200
ACCESSOIRES: SIEGENIA Alu 5200
ACCESSORIES: SIEGENIA Alu 5200
ZUBEHOER: SIEGENIA Alu 5200

4/C3/8A
1200 PA DESIGN WIND LOAD
450 PA WATER TIGHTNESS

1. 408.0102.XX
   508.0102.XX
2. 408.0192.XX
   508.0192.XX
3. 408.0112.XX
   508.0112.XX

	Maximum vent weight (kg) *							
408.0102 - 508.0102	130	130	130	130	130	126	112	101
408.0192 - 508.0192	130	130	130	130	130	130	130	130
408.0112 - 508.0112	130	130	130	130	130	130	130	130

* THE SPECIFIED VENT WEIGHT IS ONLY POSSIBLE WHEN THE CHOSEN ACCESSORIES CAN WITHSTAND THIS LOAD.

MAXIMAL DIMENSIONS BALCONY DOOR SIEGENIA

MAX. ADMISSIBLE SIZES

MASTERLINE 8-Fu

BALKONDEUR BUITENDRAAIEND
PORTE FENÊTRE PMR OUVRANT VERS L'EXTERIEUR
BALCONY DOOR SINGLE OUTWARD OPENING
BALKONTÜR NACH AUSSEN OFFNEND

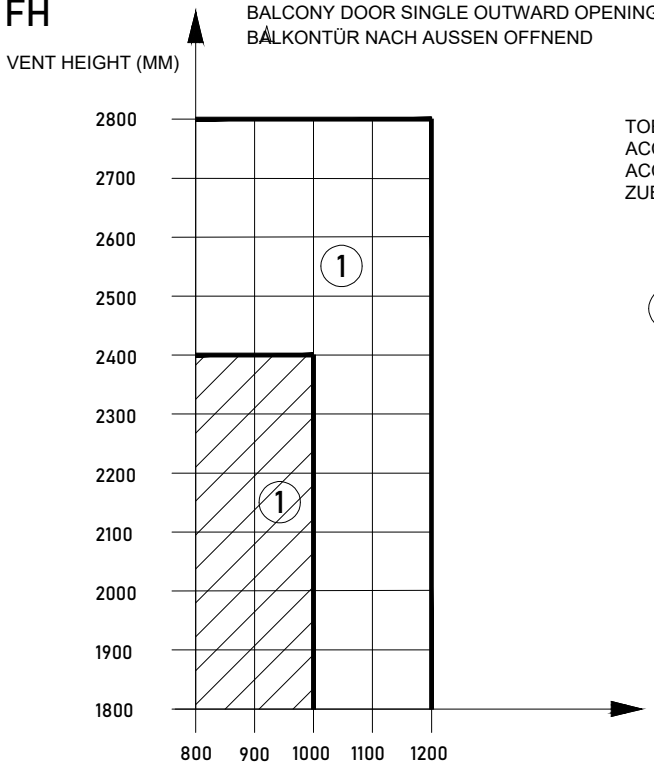

TOEBEHOREN: SIEGENIA Alu 5200
ACCESSOIRES: SIEGENIA Alu 5200
ACCESSORIES: SIEGENIA Alu 5200
ZUBEHOER: SIEGENIA Alu 5200

(1) 408.1051.XX
508.1051.XX

4/C4/9A
1600 PA DESIGN WIND LOAD
600 PA WATER TIGHTNESS

4/C4/E1200
1600 PA DESIGN WIND LOAD
1200 PA WATER TIGHTNESS

408.1051 - 508.1051	130	130	130	130	130

Maximum vent weight (kg) *

* THE SPECIFIED VENT WEIGHT IS ONLY POSSIBLE WHEN THE CHOSEN ACCESSORIES CAN WITHSTAND THIS LOAD.

MAXIMAL DIMENSIONS BALCONY DOOR SIEGENIA

MAX. ADMISSIBLE SIZES

MASTERLINE 8-Fu

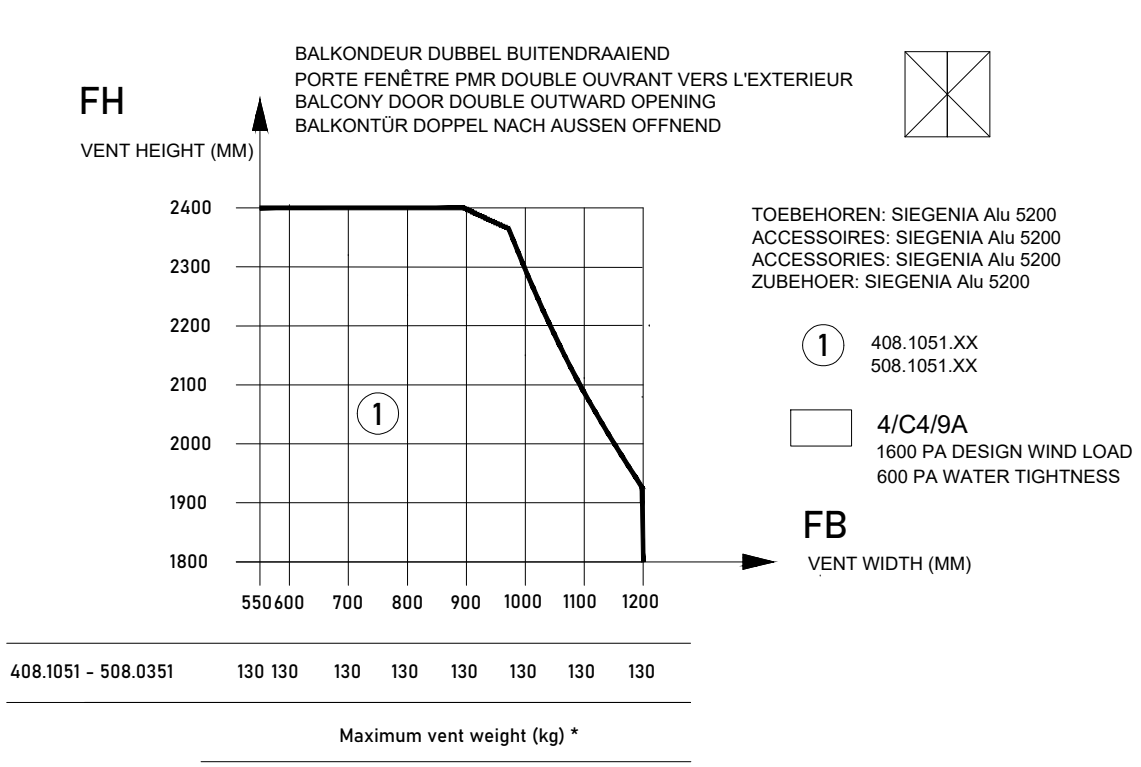

408.1051 - 508.0351	130	130	130	130	130	130	130	130

Maximum vent weight (kg) *

* THE SPECIFIED VENT WEIGHT IS ONLY POSSIBLE WHEN THE CHOSEN ACCESSORIES CAN WITHSTAND THIS LOAD.

MAXIMAL DIMENSIONS FAPIM

MAX. ADMISSIBLE SIZES

MASTERLINE 8-Fu

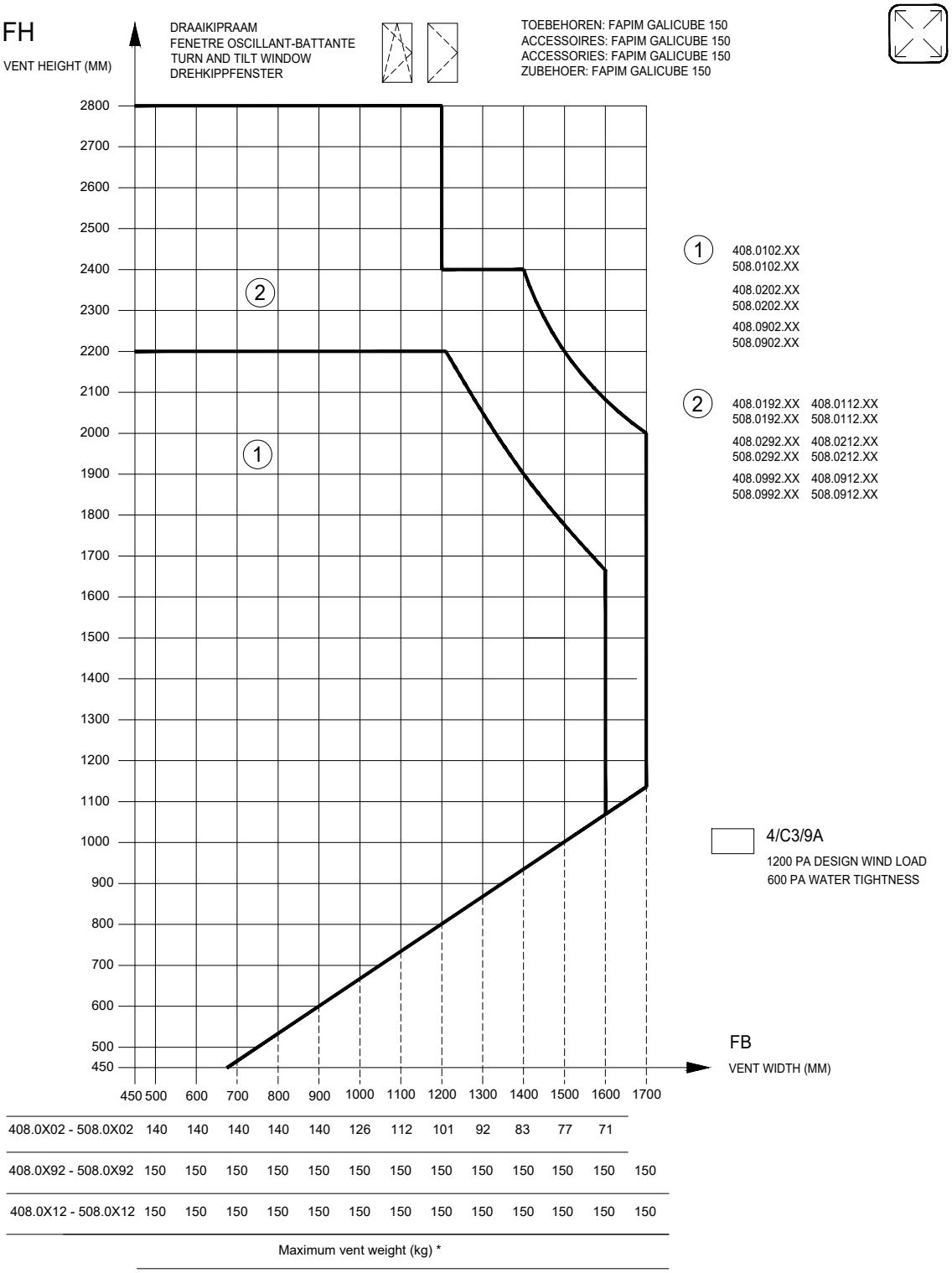

408.0X02 - 508.0X02	140	140	140	140	140	126	112	101	92	83	77	71	
408.0X92 - 508.0X92	150	150	150	150	150	150	150	150	150	150	150	150	150
408.0X12 - 508.0X12	150	150	150	150	150	150	150	150	150	150	150	150	150

Maximum vent weight (kg) *

* THE SPECIFIED VENT WEIGHT IS ONLY POSSIBLE WHEN THE CHOSEN ACCESSORIES CAN WITHSTAND THIS LOAD.

* VERIFY THE WEIGHT AND DIMENSIONS WITH THE MAXIMUM POSSIBLE GLASS THICKNESS TABLE INDICATED IN THE HARDWARE PLANS.

MAXIMAL DIMENSIONS FAPIM

MAX. ADMISSIBLE SIZES

MASTERLINE 8-Fu

STOLPRAAM
FENETRE DOUBLE OUVRANTE
DOUBLE CASEMENT WINDOW
STULP-DREHFENSTER

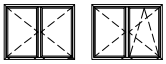

TOEBEHOREN: FAPIM GALICUBE 150
ACCESSOIRES: FAPIM GALICUBE 150
ACCESSORIES: FAPIM GALICUBE 150
ZUBEHOER: FAPIM GALICUBE 150



FH

VENT HEIGHT (MM)

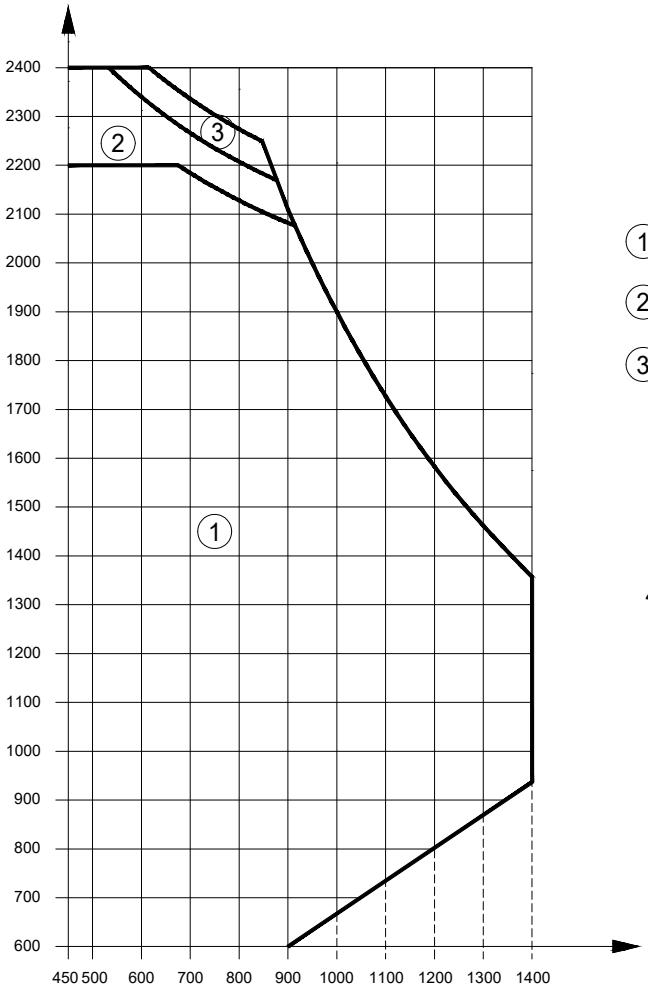

408.0X02 - 508.0X02	140	140	140	140	140	126	112	101	92	83
408.0X92 - 508.0X92	150	150	150	150	150	150	150	150	150	150
408.0X12 - 508.0X12	150	150	150	150	150	150	150	150	150	150

Maximum vent weight (kg) *

1	408.0102.XX 508.0102.XX	408.0202.XX 508.0202.XX	408.0902.XX 508.0902.XX
2	408.0192.XX 508.0192.XX	408.0292.XX 508.0292.XX	408.0992.XX 508.0992.XX
3	408.0112.XX 508.0112.XX	408.0212.XX 508.0212.XX	408.0912.XX 508.0912.XX

4/C3/9A

1200 PA DESIGN WIND LOAD
600 PA WATER TIGHTNESS

* THE SPECIFIED VENT WEIGHT IS ONLY POSSIBLE WHEN THE CHOSEN ACCESSORIES CAN WITHSTAND THIS LOAD.
* VERIFY THE WEIGHT AND DIMENSIONS WITH THE MAXIMUM POSSIBLE GLASS THICKNESS TABLE INDICATED IN THE HARDWARE PLANS.

MAXIMAL DIMENSIONS DOOR

MAX. ADMISSIBLE SIZES

MASTERLINE 8-Fu

Vleugelhoogte (mm)
Hauteur d' ouvrant (mm)
Vent height (mm)
Flügelhöhe (mm)

DEUR NAAR BINNENDRAAIEND
PORTE OUVRANT VERS L'INTERIEUR
DOOR INWARD OPENING
TUER NACH INNEN OEFFNEND



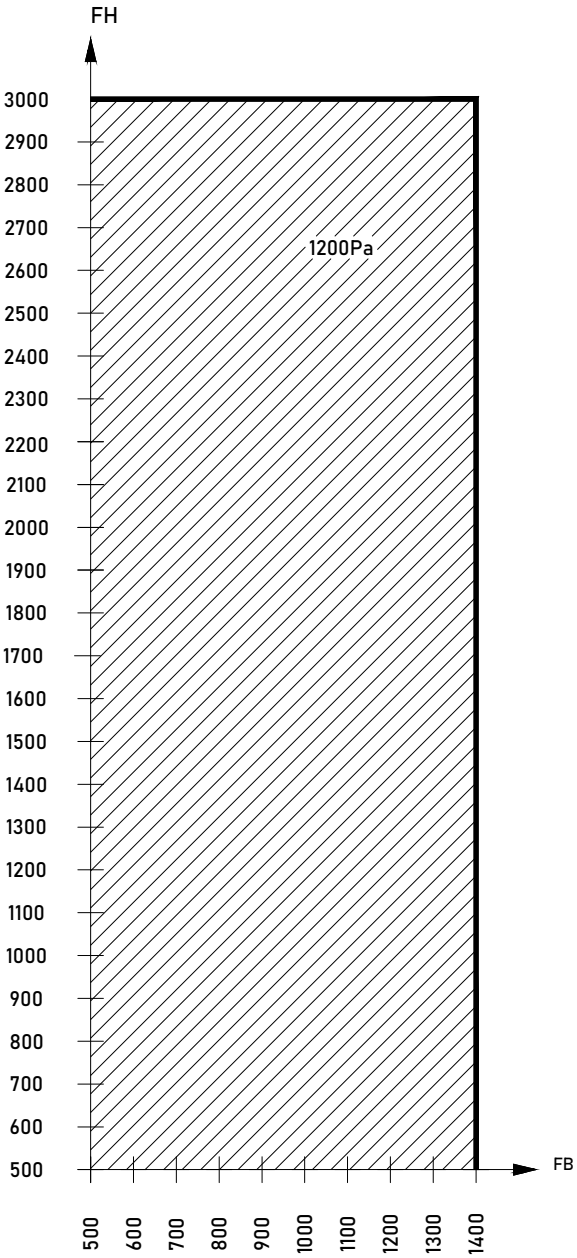

408.0026.XX
408.0096.XX
408.1334.XX
408.1316.XX

LUCHTDOORLAATBAARHEID EN WATERDICHTHEID AFHANKELIJK VAN BODEM-OPLOSSING EN OPENINGSRICHTING.

PERMÉABILITÉ À L'AIR ET ÉTANCHÉITÉ À L'EAU EN FONCTION DE LA SOLUTION DE RACCORD AU SOL ET DU SENS D'OUVERTURE.

AIR PERMEABILITY AND WATER TIGHTNESS DEPENDING ON BOTTOM SOLUTION AND OPENING DIRECTION.

LUFTDURCHLÄSSIGKEIT UND WASSERDICHTHEIT JE NACH BODENLÖSUNG UND ÖFFNUNGSRICHTUNG.

Vleugelbreedte (mm)
Largeur d'ouvrant (mm)
Vent width (mm)
Flügelbreite (mm)

DE MAXIMALE AFMETINGEN ZIJN ENKEL GEBASEERD OP PROFIELEIGENSCHAPPEN.
ER DIENT OOK STEEDS REKENING GEHOUDEN TE WORDEN MET DE BESLAG SPECIFICATIES.
LES DIMENSIONS MAXIMALES NE SONT BASEES QUE SUR LES CARACTERISTIQUES DU PROFILE.
IL FAUT EN TOUS CAS TENIR COMPTE DES SPECIFICATIONS DE ACCESSOIRES.
THE MAXIMUM SIZES ARE ONLY BASED ON PROFILE CHARACTERISTICS.
ONE SHOULD AT ALL TIMES TAKE INTO ACCOUNT THE ACCESSORY SPECIFICATIONS.
DIE MAXIMALABMESSUNGEN SIND NUR AUF DIE PROFILEIGENSCHAFTEN BASIERT.
MAN SOLL IMMER MIT DEN ZUBEHOERSPZIFIKATIONEN RECHNEN.

MAXIMAL DIMENSIONS DOOR

MAX. ADMISSIBLE SIZES

MASTERLINE 8-Fu

Vleugelhoogte (mm)
Hauteur d' ouvrant (mm)
Vent height (mm)
Flügelhöhe (mm)

DUBBELE DEUR NAAR BINNENDRAAIEND
PORTE DOUBLE OUVRANT VERS L'INTERIEUR
DOUBLE DOOR INWARD OPENING
ZWEIFLUEGELIGE TUER NACH INNEN OEFFNEND



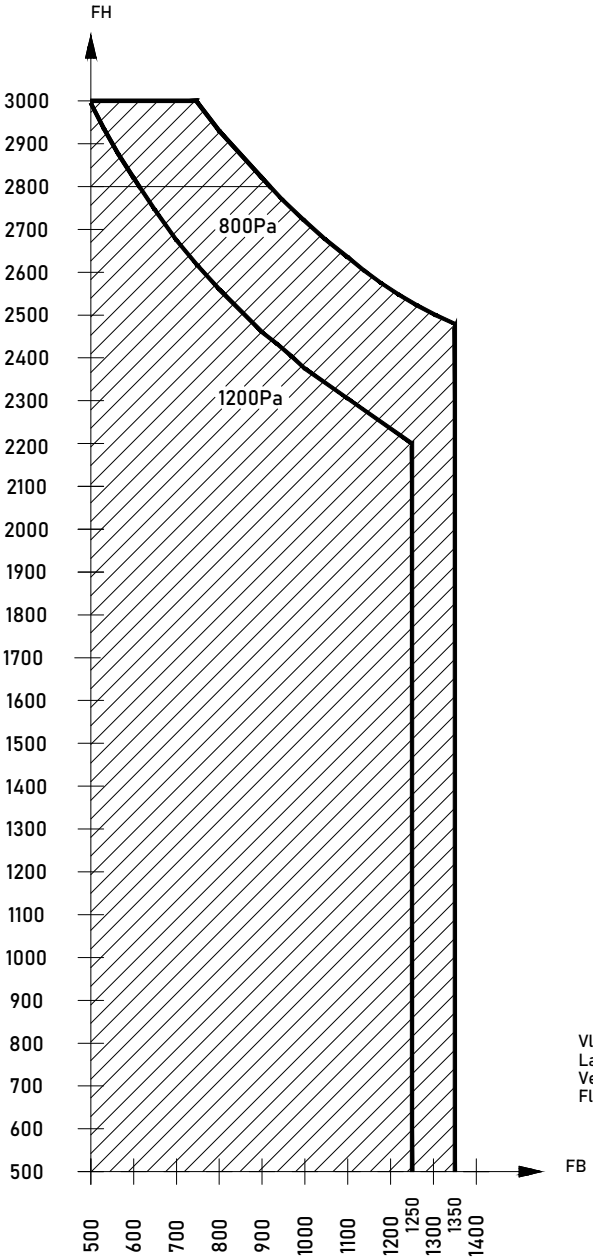

408.0026.XX
408.0096.XX
108.1015.XX
408.1316.XX
408.1334.XX

LUCHTDOORLAATBAARHEID EN WATERDICHTHEID AFHANKELIJK VAN BODEM-OPLOSSING EN OPENINGSRICHTING.

PERMÉABILITÉ À L'AIR ET ÉTANCHÉITÉ À L'EAU EN FONCTION DE LA SOLUTION DE RACCORD AU SOL ET DU SENS D'OUVERTURE.

AIR PERMEABILITY AND WATER TIGHTNESS DEPENDING ON BOTTOM SOLUTION AND OPENING DIRECTION.

LUFTDURCHLÄSSIGKEIT UND WASSERDICHTHEIT JE NACH BODENLÖSUNG UND ÖFFNUNGSRICHTUNG.

Vleugelbreedte (mm)
Largeur d'ouvrant (mm)
Vent width (mm)
Flügelbreite (mm)

DE MAXIMALE AFMETINGEN ZIJN ENKEL GEBASEERD OP PROFIELEIGENSCHAPPEN.
ER DIENT OOK STEEDS REKENING GEHOUDEN TE WORDEN MET DE BESLAG SPECIFICATIES.
LES DIMENSIONS MAXIMALES NE SONT BASEES QUE SUR LES CARACTERISTIQUES DU PROFILE.
IL FAUT EN TOUS CAS TENIR COMPTE DES SPECIFICATIONS DE ACCESSOIRES.
THE MAXIMUM SIZES ARE ONLY BASED ON PROFILE CHARACTERISTICS.
ONE SHOULD AT ALL TIMES TAKE INTO ACCOUNT THE ACCESSORY SPECIFICATIONS.
DIE MAXIMALABMESSUNGEN SIND NUR AUF DIE PROFILEIGENSCHAFTEN BASIERT.
MAN SOLL IMMER MIT DEN ZUBEHOERSPZIFIKATIONEN RECHNEN.

MAXIMAL DIMENSIONS DOOR

MAX. ADMISSIBLE SIZES

MASTERLINE 8-Fu

Vleugelhoogte (mm)
Hauteur d' ouvrant (mm)
Vent height (mm)
Flügelhöhe (mm)

DEUR NAAR BUITENDRAAIEND
PORTE OUVRANT VERS L'EXTERIEUR
DOOR OUTWARD OPENING
TUER NACH AUSSEN OEFFNEND



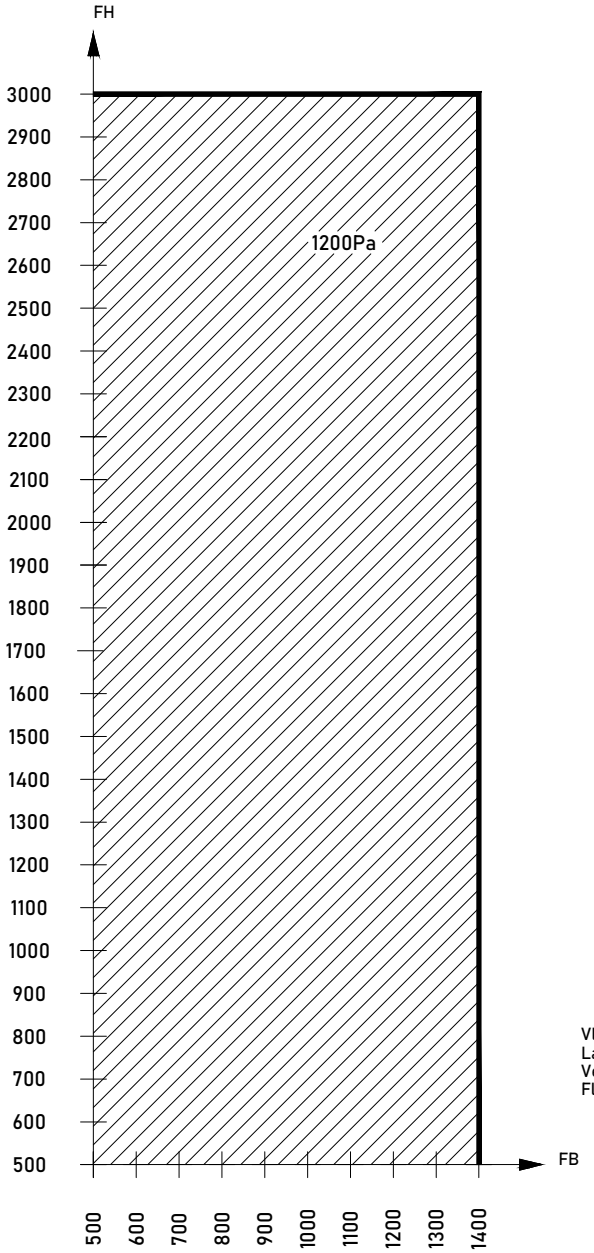

408.0014.XX
408.0094.XX
408.1314.XX
408.1334.XX

LUCHTDOORLAATBAARHEID EN WATERDICHTHEID AFHANKELIJK VAN BODEM-OPLOSSING EN OPENINGSRICHTING.

PERMÉABILITÉ À L'AIR ET ÉTANCHÉITÉ À L'EAU EN FONCTION DE LA SOLUTION DE RACCORD AU SOL ET DU SENS D'OUVERTURE.

AIR PERMEABILITY AND WATER TIGHTNESS DEPENDING ON BOTTOM SOLUTION AND OPENING DIRECTION.

LUFTDURCHLÄSSIGKEIT UND WASSERDICHTHEIT JE NACH BODENLÖSUNG UND ÖFFNUNGSRICHTUNG.

Vleugelbreedte (mm)
Largeur d'ouvrant (mm)
Vent width (mm)
Flügelbreite (mm)

DE MAXIMALE AFMETINGEN ZIJN ENKEL GEBASEERD OP PROFIELEIGENSCHAPPEN.
ER DIENT OOK STEEDS REKENING GEHOUDEN TE WORDEN MET DE BESLAG SPECIFICATIES.
LES DIMENSIONS MAXIMALES NE SONT BASEES QUE SUR LES CARACTERISTIQUES DU PROFILE.
IL FAUT EN TOUS CAS TENIR COMPTE DES SPECIFICATIONS DE ACCESSOIRES.
THE MAXIMUM SIZES ARE ONLY BASED ON PROFILE CHARACTERISTICS.
ONE SHOULD AT ALL TIMES TAKE INTO ACCOUNT THE ACCESSORY SPECIFICATIONS.
DIE MAXIMALABMESSUNGEN SIND NUR AUF DIE PROFILEIGENSCHAFTEN BASIERT.
MAN SOLL IMMER MIT DEN ZUBEHOERSPZIFIKATIONEN RECHNEN.

MAXIMAL DIMENSIONS DOOR

MAX. ADMISSIBLE SIZES

MASTERLINE 8-Fu

Vleugelhoogte (mm)
Hauteur d' ouvrant (mm)
Vent height (mm)
Flügelhöhe (mm)

DUBBELE DEUR NAAR BUITENDRAAIEND
PORTE DOUBLE OUVRANT VERS L'EXTERIEUR
DOUBLE DOOR OUTWARD OPENING
ZWEIFLUEGELIGE TUER NACH AUSSEN OEFFNEND



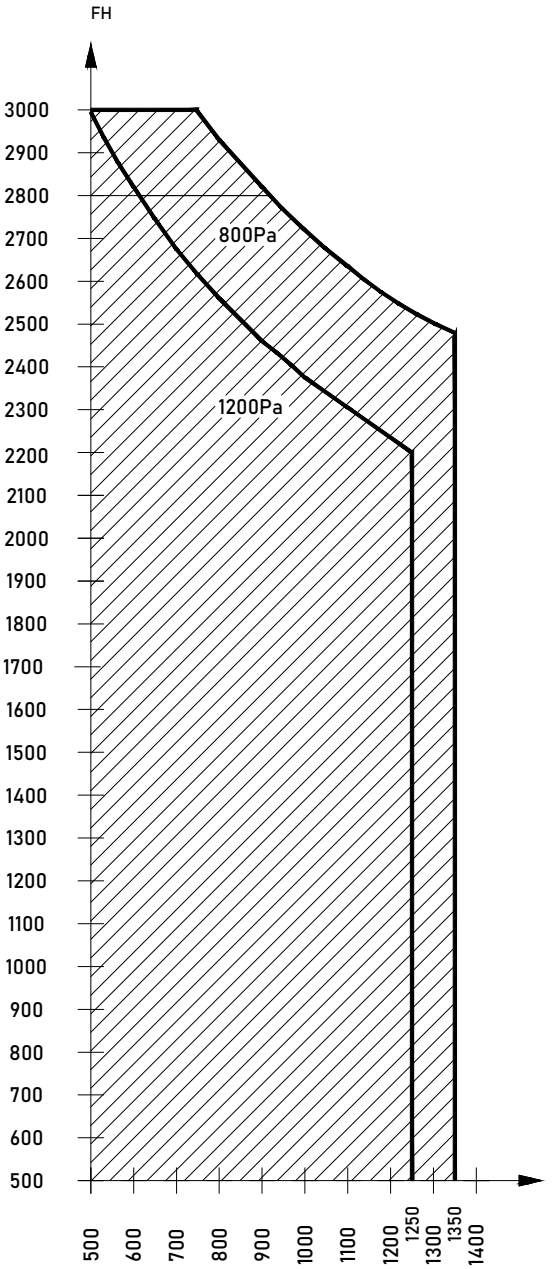

408.0014.XX
408.0094.XX
108.1815.XX
408.1314.XX
408.1334.XX

LUCHTDOORLAATBAARHEID EN WATERDICHTHEID AFHANKELIJK VAN BODEM-OPLOSSING EN OPENINGSRICHTING.

PERMÉABILITÉ À L'AIR ET ÉTANCHÉITÉ À L'EAU EN FONCTION DE LA SOLUTION DE RACCORD AU SOL ET DU SENS D'OUVERTURE.

AIR PERMEABILITY AND WATER TIGHTNESS DEPENDING ON BOTTOM SOLUTION AND OPENING DIRECTION.

LUFTDURCHLÄSSIGKEIT UND WASSERDICHTHEIT JE NACH BODENLÖSUNG UND ÖFFNUNGSRICHTUNG.

Vleugelbreedte (mm)
Largeur d'ouvrant (mm)
Vent width (mm)
Flügelbreite (mm)

DE MAXIMALE AFMETINGEN ZIJN ENKEL GEBASEERD OP PROFIELEIGENSCHAPPEN.
ER DIENT OOK STEEDS REKENING GEHOUDEN TE WORDEN MET DE BESLAG SPECIFICATIES.
LES DIMENSIONS MAXIMALES NE SONT BASEES QUE SUR LES CARACTERISTIQUES DU PROFILE.
IL FAUT EN TOUS CAS TENIR COMPTE DES SPECIFICATIONS DE ACCESSOIRES.
THE MAXIMUM SIZES ARE ONLY BASED ON PROFILE CHARACTERISTICS.
ONE SHOULD AT ALL TIMES TAKE INTO ACCOUNT THE ACCESSORY SPECIFICATIONS.
DIE MAXIMALABMESSUNGEN SIND NUR AUF DIE PROFILEIGENSCHAFTEN BASIERT.
MAN SOLL IMMER MIT DEN ZUBEHOERSPZIFIKATIONEN RECHNEN.

MAXIMAL DIMENSIONS DOOR

MAX. ADMISSIBLE SIZES

MASTERLINE 8-Fu

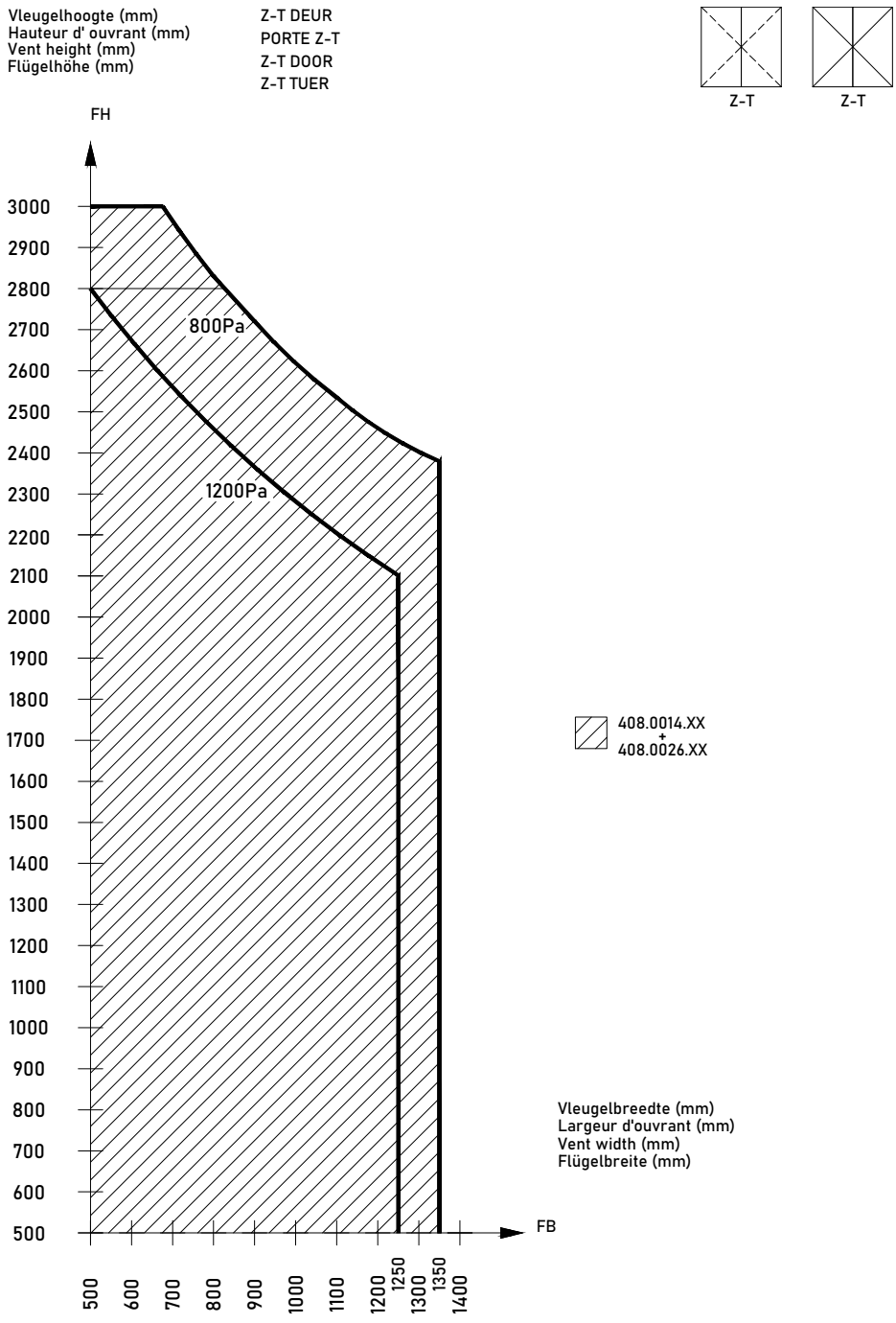

DE MAXIMALE AFMETINGEN ZIJN ENKEL GEBASEERD OP PROFIELEIGENSCHAPPEN.
ER DIENT OOK STEEDS REKENING GEHOUDEN TE WORDEN MET DE BESLAG SPECIFICATIES.
LES DIMENSIONS MAXIMALES NE SONT BASEES QUE SUR LES CARACTERISTIQUES DU PROFILE.
IL FAUT EN TOUS CAS TENIR COMPTE DES SPECIFICATIONS DE ACCESSOIRES.
THE MAXIMUM SIZES ARE ONLY BASED ON PROFILE CHARACTERISTICS.
ONE SHOULD AT ALL TIMES TAKE INTO ACCOUNT THE ACCESSORY SPECIFICATIONS.
DIE MAXIMALABMESSUNGEN SIND NUR AUF DIE PROFILEIGENSCHAFTEN BASIERT.
MAN SOLL IMMER MIT DEN ZUBEHOERSPZIFIKATIONEN RECHNEN.

MAXIMAL DIMENSIONS PIVOT DOOR

MAX. ADMISSIBLE SIZES

MASTERLINE 8-Fu

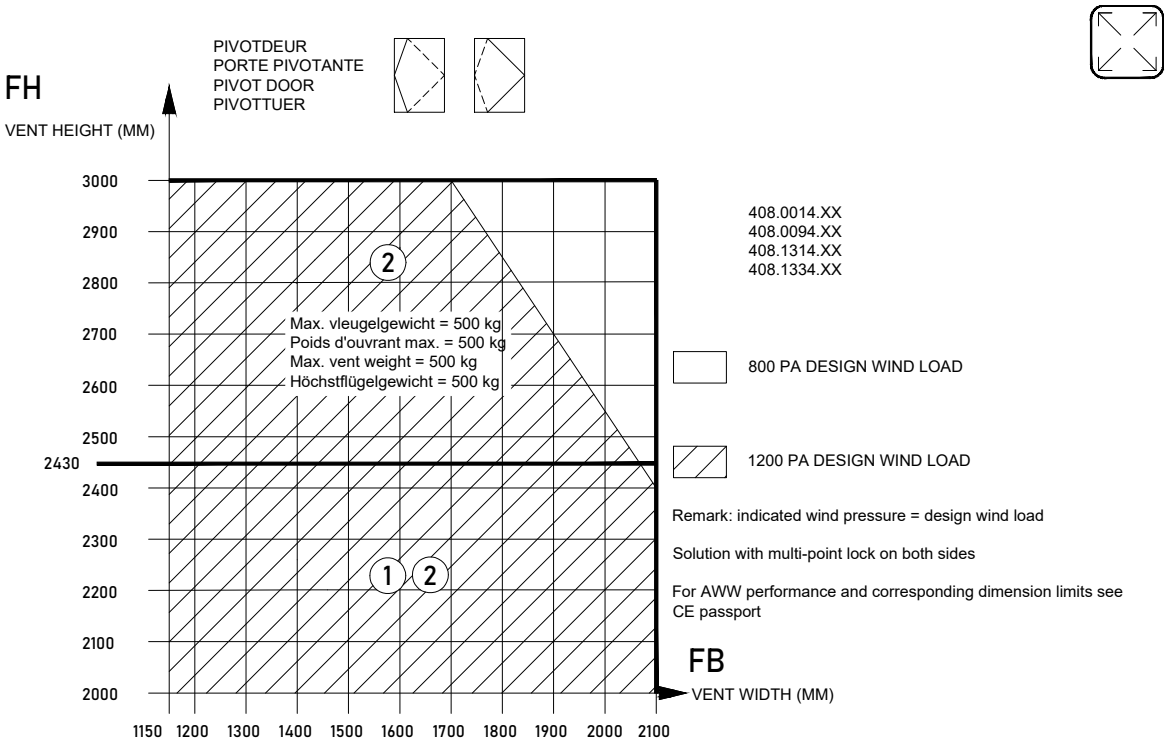

NL Het is mogelijk dat bepaalde accessoires de afmetingen en het gewicht verder beperken.
Er dient ook steeds rekening gehouden te worden met de beslag specificaties.

FR Il est possible que certains accessoires imposent des limitations supplémentaires en termes de dimensions et de poids.
Il faut en tous cas tenir compte des specifications des accessoires.

EN It is possible that certain accessories place further limitations on size and weights.
One should at all times take into account the accessory specifications.

DE Es ist möglich dass bestimmte Zubehörteile die Größe und das Gewicht weiter einschränken.
Man soll immer mit den Zubehörspezifikationen rechnen.

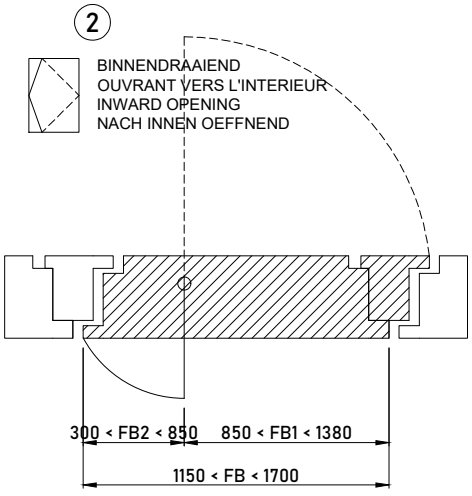

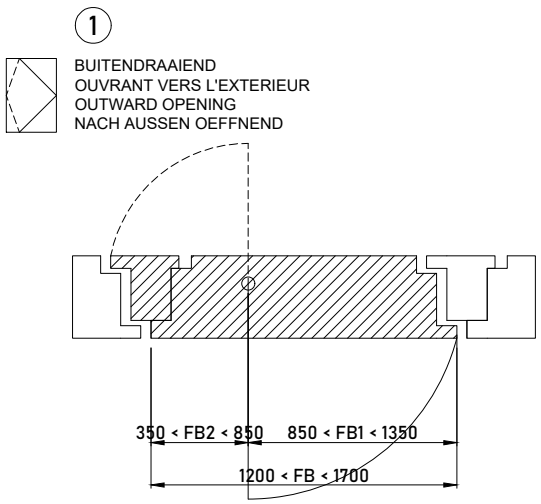

MAXIMAL DIMENSIONS PIVOT DOOR XL

MAX. ADMISSIBLE SIZES | 165.8542.--, 165.8544.--, 165.8546.--, 165.8548.--

MASTERLINE 8-Fu, OPENING DOORS

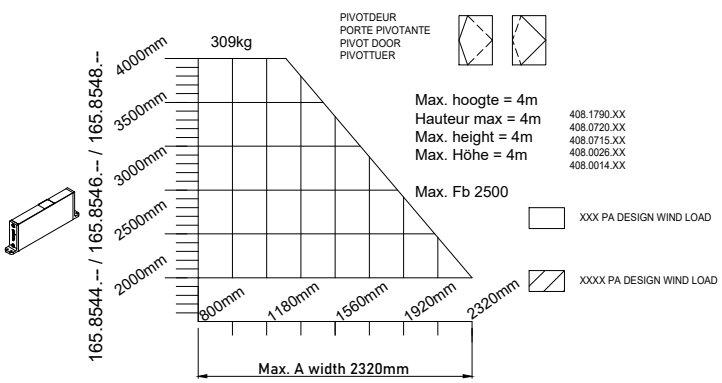

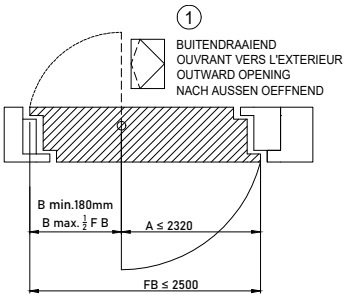

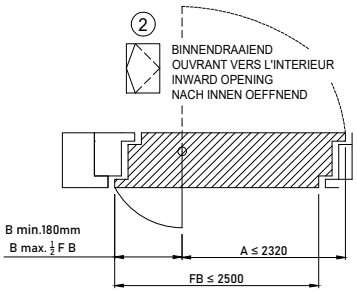

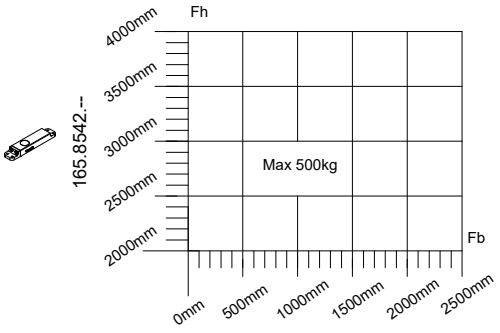

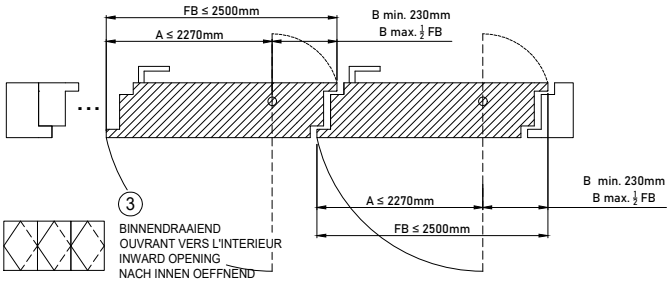

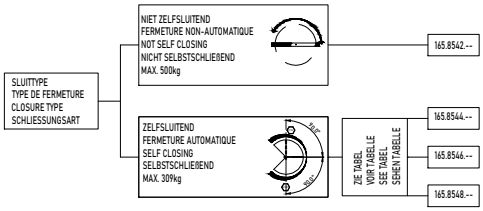

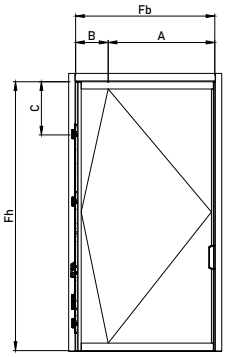

165.8544.-- / 165.8546.-- / 165.8548.--

300-309	165.8548																		
290-299	165.8548	165.8548																	
280-289	165.8548	165.8548	165.8548																
270-279	165.8548	165.8548	165.8548	165.8548															
260-269	165.8548	165.8548	165.8548	165.8548	165.8548														
250-259	165.8548	165.8548	165.8548	165.8548	165.8548	165.8548													
240-249	165.8548	165.8548	165.8548	165.8548	165.8548	165.8548	165.8548												
230-239	165.8546	165.8548	165.8548	165.8548	165.8548	165.8548	165.8548	165.8548											
220-229	165.8546	165.8546	165.8548	165.8548	165.8548	165.8548	165.8548	165.8548	165.8548										
210-219	165.8546	165.8546	165.8546	165.8548	165.8548	165.8548	165.8548	165.8548	165.8548	165.8548									
200-209	165.8546	165.8546	165.8546	165.8546	165.8548	165.8548	165.8548	165.8548	165.8548	165.8548	165.8548								
190-199	165.8546	165.8546	165.8546	165.8546	165.8546	165.8548	165.8548	165.8548	165.8548	165.8548	165.8548	165.8548							
180-189	165.8546	165.8546	165.8546	165.8546	165.8546	165.8546	165.8546	165.8548	165.8548	165.8548	165.8548	165.8548	165.8548						
170-179	165.8546	165.8546	165.8546	165.8546	165.8546	165.8546	165.8546	165.8546	165.8548	165.8548	165.8548	165.8548	165.8548	165.8548					
160-169	165.8544	165.8546	165.8546	165.8546	165.8546	165.8546	165.8546	165.8546	165.8546	165.8546	165.8548	165.8548	165.8548	165.8548	165.8548				
150-159	165.8544	165.8544	165.8546	165.8546	165.8546	165.8546	165.8546	165.8546	165.8546	165.8546	165.8546	165.8548	165.8548	165.8548	165.8548	165.8548	165.8548		
140-149	165.8544	165.8544	165.8544	165.8546	165.8546	165.8546	165.8546	165.8546	165.8546	165.8546	165.8546	165.8546	165.8548	165.8548	165.8548	165.8548	165.8548	165.8548	165.8548
130-139	165.8544	165.8544	165.8544	165.8544	165.8546	165.8546	165.8546	165.8546	165.8546	165.8546	165.8546	165.8546	165.8546	165.8546	165.8548	165.8548	165.8548	165.8548	165.8548
120-129	165.8544	165.8544	165.8544	165.8544	165.8544	165.8546	165.8546	165.8546	165.8546	165.8546	165.8546	165.8546	165.8546	165.8546	165.8548	165.8548	165.8548	165.8548	165.8548
110-119		165.8544	165.8544	165.8544	165.8544	165.8544	165.8546	165.8546	165.8546	165.8546	165.8546	165.8546	165.8546	165.8546	165.8546	165.8548	165.8548	165.8548	165.8548
100-109			165.8544	165.8544	165.8544	165.8544	165.8544	165.8546	165.8546	165.8546	165.8546	165.8546	165.8546	165.8546	165.8546	165.8546	165.8548	165.8548	165.8548
90-99				165.8544	165.8544	165.8544	165.8544	165.8544	165.8544	165.8546	165.8546	165.8546	165.8546	165.8546	165.8546	165.8546	165.8546	165.8548	165.8548
80-89					165.8544	165.8544	165.8544	165.8544	165.8544	165.8546	165.8546	165.8546	165.8546	165.8546	165.8546	165.8546	165.8546	165.8546	165.8548
70-79						165.8544	165.8544	165.8544	165.8544	165.8544	165.8546	165.8546	165.8546	165.8546	165.8546	165.8546	165.8546	165.8546	165.8546
60-69							165.8544	165.8544	165.8544	165.8544	165.8544	165.8546	165.8546	165.8546	165.8546	165.8546	165.8546	165.8546	165.8546
50-59								165.8544	165.8544	165.8544	165.8544	165.8544	165.8546	165.8546	165.8546	165.8546	165.8546	165.8546	165.8546
40-49									165.8544	165.8544	165.8544	165.8544	165.8544	165.8546	165.8546	165.8546	165.8546	165.8546	165.8546
A min-max mm	800-899	900-999	1000-1099	1100-1199	1200-1299	1300-1399	1400-1499	1500-1599	1600-1699	1700-1799	1800-1899	1900-1999	2000-2099	2100-2199	2200-2299	2300-2399	2400-2499		
Fb min-max mm	891-1600	991-1800	1091-2000	1191-2200	1291-2400	1391-2500	1491-2500	1591-2500	1691-2500	1791-2500	1891-2500	1991-2500	2091-2500	2191-2500	2291-2500	2391-2500	2491-2500		

MAXIMAL DIMENSIONS GLASS INTEGRATED BALLUSTRADE

MIN/MAX GLASS THICKNESS

MASTERLINE 8-Fu

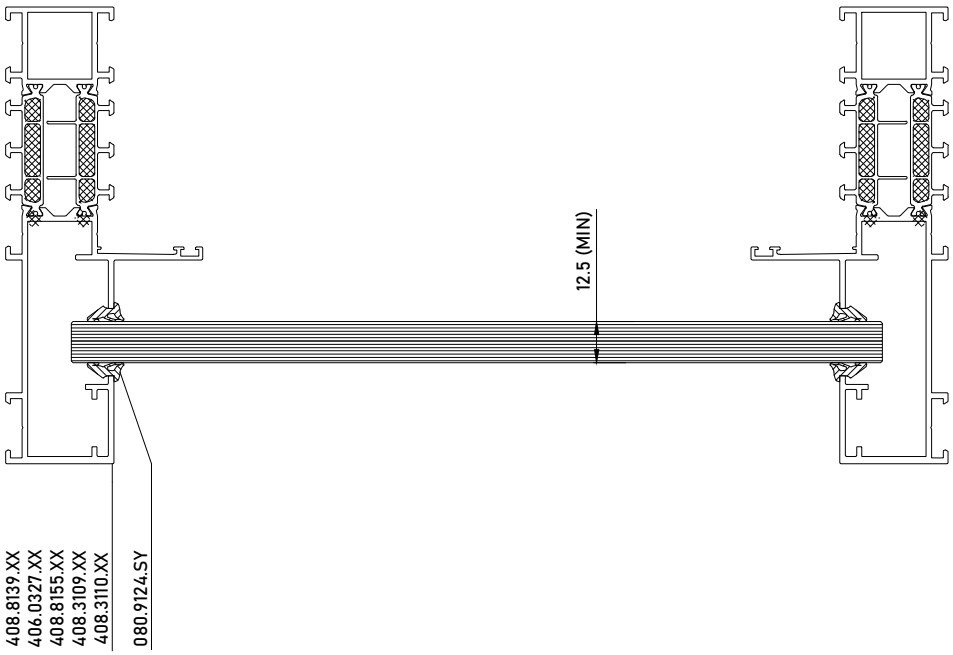

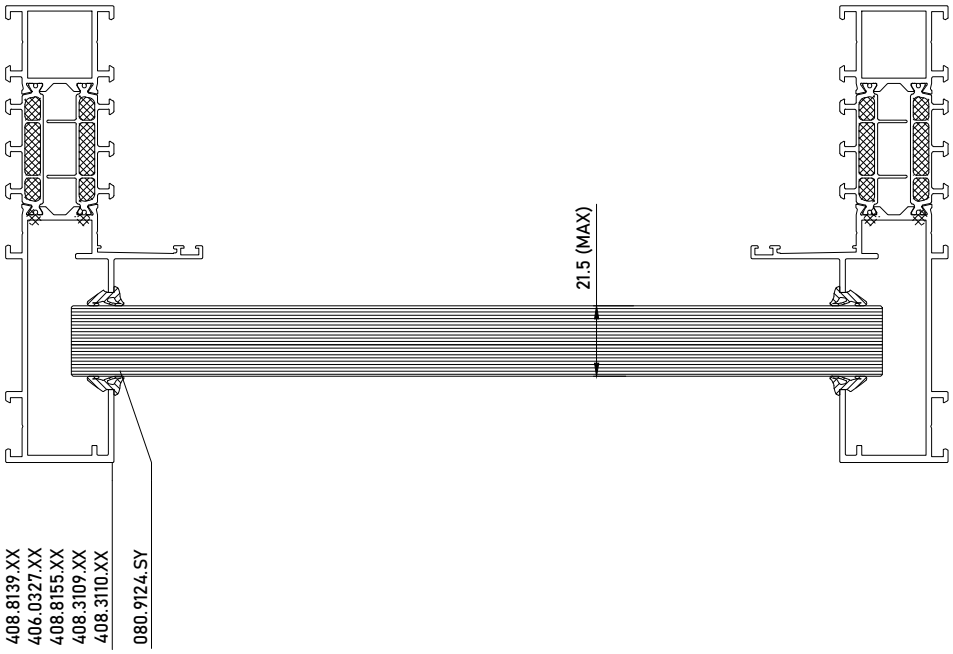

Hardware Info
Beslaginformatie
Informations de quincaillerie
Beschlag-informationen

Reynaers Aluminium

MAXIMAL DIMENSIONS PIVOT WINDOW SOBINCO

PIVOT WINDOW INVISIBLE - MAXIMUM DIMENSIONS

MASTERLINE 8-Fu, OPENING WINDOWS

NOT FOR MASTERLINE 10
ONLY FOR MASTERLINE 8

TUIMEL- EN TAATSRAAM
FENETRE PIVOTANTE
PIVOT WINDOW
SCHWINGFLUEGEL

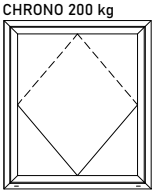

CHRONO 200 kg



TOEBEHOREN SOBINCO
ACCESSOIRES SOBINCO
ACCESSORIES SOBINCO
ZUBEHOER SOBINCO



NIET GETEST
NON TESTÉ
NOT TESTED
NICHT GETESTET

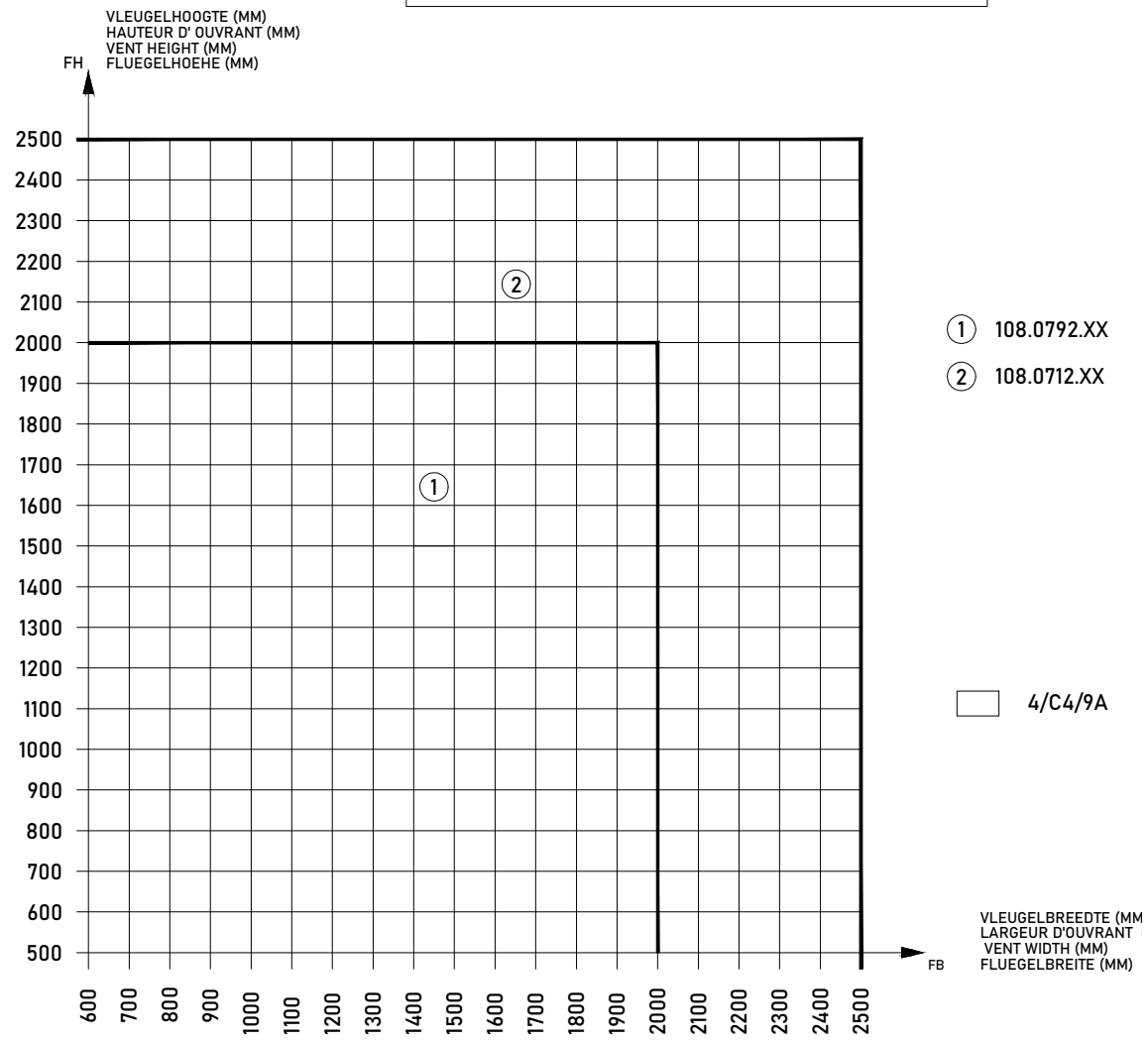

108.0792.XX	200	200	200	200	200	200	200	200	195	176	160	147	135	125	116	107	100	93	87	80
108.0712.XX	200	200	200	200	200	200	200	200	200	200	200	200	187	170	156	143	132	123	114	106
	Maximum vent weight (kg)																			

Max Dimensions
Maximale afmetingen
Dimensions maximales
Maximale Abmessungen

Reynaers Aluminium

TABLE MOMENTS OF INERTIA

TABLE WITH MOMENTS OF INERTIA

MASTERLINE 8-Fu

i VERSTERKING LANGS BINNEN
RENFORCEMENT DU CÔTÉ INTÉRIEUR
VERSTÄRKUNG DER INNENSEITE
REINFORCEMENT INSIDE

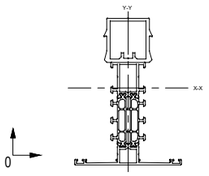

e VERSTERKING LANGS BUITEN
RENFORCEMENT DU CÔTÉ EXTÉRIEUR
VERSTÄRKUNG DER AUSSENSEITE
REINFORCEMENT OUTSIDE

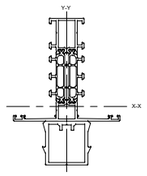

OPMERKING: VERSTEVIGING VAN BINNENZIJDE + SCHARNIER IS NIET MOGELIJK INDIEN DE BINNENZIJDE VAN EEN T-PROFIEL < 75 MM
BEVESTIGING: OM DE 300 MM

REMARQUE: RENFORCEMENT DU CÔTÉ INTÉRIEUR + PAUMELLE EST IMPOSSIBLE SI LE CÔTÉ INTÉRIEUR DE LA TRAVERSE < 75 MM
FIXATION: TOUS LES 300

ANMERKUNG: DAS ANBRINGEN EINER VERSTÄRKUNG AUF DER RAHMENINNENSEITE IST NUR MÖGLICH,
WENN KEINE BESCHLAGTEILE VORHANDEN SIND BZW. DIE PROFILBREITE <75MM BETRÄGT.
BEFESTIGUNG: JEDE 300 MM

REMARK: REINFORCEMENT OF INNER SIDE + HINGE IS NOT POSSIBLE IN CASE THE INNER SIDE OF A TRANSOM-MULLION < 75 MM
FIXING: EACH 300 MM

					030.1096.00		
		Ix cm⁴	Wx cm³		Ix cm⁴	Wx cm³	
408.0113.XX		23.636	5.165	e	50.215	7.608	
				i	67.531	11.667	
408.0120.XX	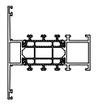	26.409	5.832	e	54.738	8.501	
				i	71.745	12.718	
408.0165.XX	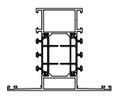	30.055	6.197	e	60.262	9.614	
				i	76.820	13.943	
408.0114.XX	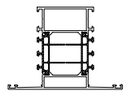	33.688	7.572	e	65.522	10.705	
				i	81.693	14.488	
408.1123.XX	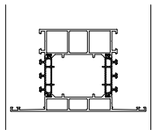	46.851	11.034	e	84.825	15.079	
				i	96.635	16.297	

i VERSTERKING LANGS BINNEN
RENFORCEMENT DU CÔTÉ INTÉRIEUR
VERSTÄRKUNG DER INNENSEITE
REINFORCEMENT INSIDE

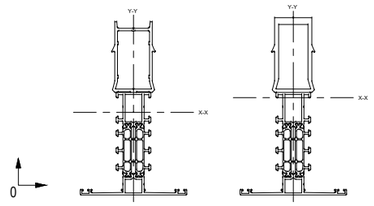

e VERSTERKING LANGS BUITEN
RENFORCEMENT DU CÔTÉ EXTÉRIEUR
VERSTÄRKUNG DER AUSSENSEITE
REINFORCEMENT OUTSIDE

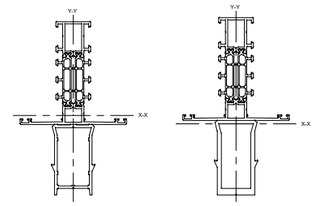

OPMERKING: VERSTEVIGING VAN BINNENZIJDE + SCHARNIER IS NIET MOGELIJK INDIEN DE BINNENZIJDE VAN EEN T-PROFIEL < 75 MM
BEVESTIGING: OM DE 300 MM

REMARQUE: RENFORCEMENT DU CÔTÉ INTÉRIEUR + PAUMELLE EST IMPOSSIBLE SI LE CÔTÉ INTÉRIEUR DE LA TRAVERSE < 75 MM
FIXATION: TOUS LES 300

ANMERKUNG: DAS ANBRINGEN EINER VERSTÄRKUNG AUF DER RAHMENINNENSEITE IST NUR MÖGLICH,
WENN KEINE BESCHLAGTEILE VORHANDEN SIND BZW. DIE PROFILBREITE <75MM BETRÄGT.
BEFESTIGUNG: JEDE 300 MM

REMARK: REINFORCEMENT OF INNER SIDE + HINGE IS NOT POSSIBLE IN CASE THE INNER SIDE OF A TRANSOM-MULLION < 75 MM
FIXING: EACH 300 MM

							030.1097.00		030.1098.00	
							Ix cm⁴	Wx cm³	Ix cm⁴	Wx cm³
408.0113.XX	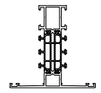	23.636	5.165	e	64.758	9.222	88.694	11.140		
				i	85.161	12.528	116.634	15.969		
408.0120.XX	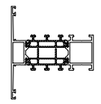	26.409	5.832	e	69.952	10.240	95.825	12.356		
				i	89.978	12.903	123.615	17.407		
408.0165.XX	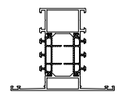	30.055	6.197	e	76.181	11.490	104.217	13.833		
				i	95.666	13.374	131.635	19.109		
408.0114.XX	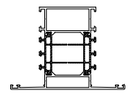	33.688	7.572	e	82.047	12.539	112.059	15.272		
				i	101.065	13.830	139.148	20.768		
408.1123.XX	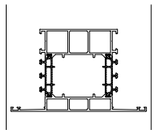	46.851	11.034	e	103.346	14.531	140.414	20.999		
				i	117.213	15.283	160.877	22.681		

TABLE MOMENTS OF INERTIA

TABLE WITH MOMENTS OF INERTIA

MASTERLINE 8-Fu

i+e

VERSTERKING LANGS BINNEN EN BUITEN
RENFORCEMENT DU CÔTÉ INTÉRIEUR ET EXTÉRIEUR
VERSTÄRKUNG DER INNENSEITE UND AUSSENSEITE
REINFORCEMENT INSIDE END OUTSIDE

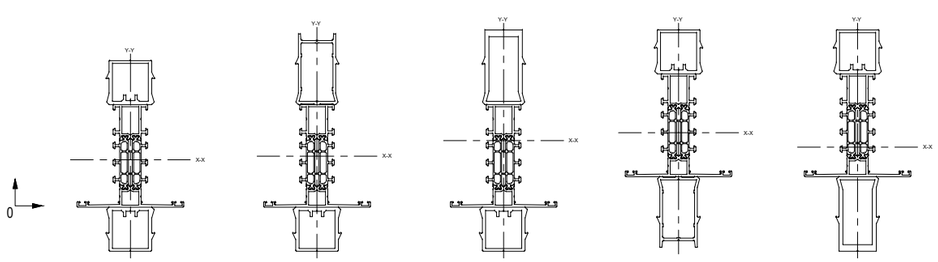

OPMERKING: VERSTEVIGING VAN BINNENZIJDE + SCHARNIER IS NIET MOGELIJK INDIEN DE BINNENZIJDE VAN EEN T-PROFIEL < 75 MM
BEVESTIGING: OM DE 300 MM

REMARQUE: RENFORCEMENT DU CÔTÉ INTÉRIEUR + PAUMELLE EST IMPOSSIBLE SI LE CÔTÉ INTÉRIEUR DE LA TRAVERSE < 75 MM
FIXATION: TOUS LES 300

ANMERKUNG: DAS ANBRINGEN EINER VERSTÄRKUNG AUF DER RAHMENINNENSEITE IST NUR MÖGLICH,
WENN KEINE BESCHLAGTEILE VORHANDEN SIND BZW. DIE PROFILBREITE <75MM BETRÄGT.
BEFESTIGUNG: JEDE 300 MM

REMARK: REINFORCEMENT OF INNER SIDE + HINGE IS NOT POSSIBLE IN CASE THE INNER SIDE OF A TRANSOM-MULLION < 75 MM
FIXING: EACH 300 MM

			e 030.1096.00 i 030.1096.00		e 030.1096.00 i 030.1097.00		e 030.1096.00 i 030.1098.00		e 030.1097.00 i 030.1096.00		e 030.1098.00 i 030.1096.00	
		Ix cm⁴	Wx cm³	Ix cm⁴	Wx cm³	Ix cm⁴	Wx cm³	Ix cm⁴	Wx cm³	Ix cm⁴	Wx cm³	Ix cm⁴	Wx cm³
408.0113.XX		23.626	5.165	143.728	19.337	169.714	18.527	233.253	28.099	167.693	19.516	222.991	25.390
408.0120.XX	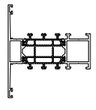	26.409	5.832	146.449	19.701	172.459	18.799	236.613	28.305	170.434	19.807	226.260	25.921
408.0165.XX	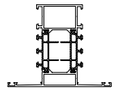	30.055	6.197	150.034	20.187	176.064	19.167	240.860	28.601	174.050	20.191	230.486	26.591
408.0114.XX	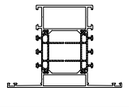	33.688	7.572	153.620	20.673	179.667	19.535	245.048	28.905	177.663	20.577	234.655	27.247
408.1123.XX	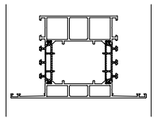	46.851	11.034	166.457	22.595	192.345	20.973	258.624	30.064	190.799	21.839	250.433	29.872

i+e

VERSTERKING LANGS BINNEN EN BUITEN
RENFORCEMENT DU CÔTÉ INTÉRIEUR ET EXTÉRIEUR
VERSTÄRKUNG DER INNENSEITE UND AUSSENSEITE
REINFORCEMENT INSIDE END OUTSIDE

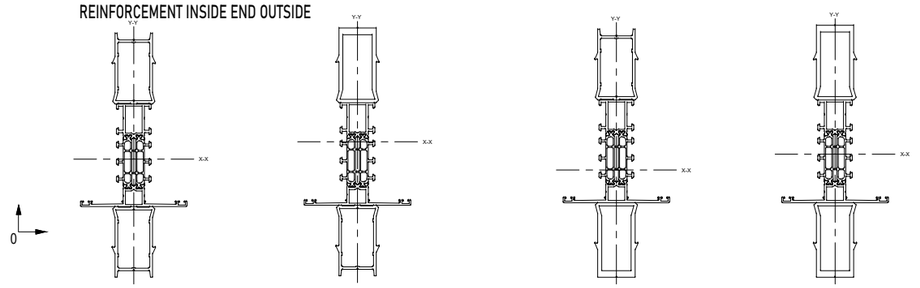

OPMERKING: VERSTEVIGING VAN BINNENZIJDE + SCHARNIER IS NIET MOGELIJK INDIEN DE BINNENZIJDE VAN EEN T-PROFIEL < 75 MM
BEVESTIGING: OM DE 300 MM

REMARQUE: RENFORCEMENT DU CÔTÉ INTÉRIEUR + PAUMELLE EST IMPOSSIBLE SI LE CÔTÉ INTÉRIEUR DE LA TRAVERSE < 75 MM
FIXATION: TOUS LES 300

ANMERKUNG: DAS ANBRINGEN EINER VERSTÄRKUNG AUF DER RAHMENINNENSEITE IST NUR MÖGLICH,
WENN KEINE BESCHLAGTEILE VORHANDEN SIND BZW. DIE PROFILBREITE <75MM BETRÄGT.
BEFESTIGUNG: JEDE 300 MM

REMARK: REINFORCEMENT OF INNER SIDE + HINGE IS NOT POSSIBLE IN CASE THE INNER SIDE OF A TRANSOM-MULLION < 75 MM
FIXING: EACH 300 MM

			e 030.1097.00 i 030.1097.00		e 030.1097.00 i 030.1098.00		e 030.1098.00 i 030.1097.00		e 030.1098.00 i 030.1098.00	
		Ix cm⁴	Wx cm³	Ix cm⁴	Wx cm³	Ix cm⁴	Wx cm³	Ix cm⁴	Wx cm³	Ix cm⁴	Wx cm³
408.0113.XX		23.636	5.165	194.653	20.629	262.349	26.056	253.764	24.040	341.915	35.393
408.0120.XX	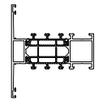	26.409	5.832	197.373	20.917	265.523	26.501	256.863	24.438	344.637	35.664
408.0165.XX	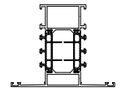	30.055	6.197	200.959	21.300	269.571	27.046	260.896	24.943	348.223	36.029
408.0114.XX	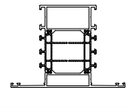	33.688	7.572	204.544	21.684	273.578	27.579	264.890	25.438	351.809	36.394
408.1123.XX	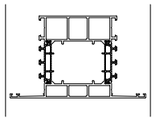	46.851	11.034	217.384	23.205	286.768	29.191	279.927	27.411	364.596	37.887

MAXIMAL DIMENSIONS SOBINCO

MAX. ADMISSIBLE SIZES

MASTERLINE 8-HV

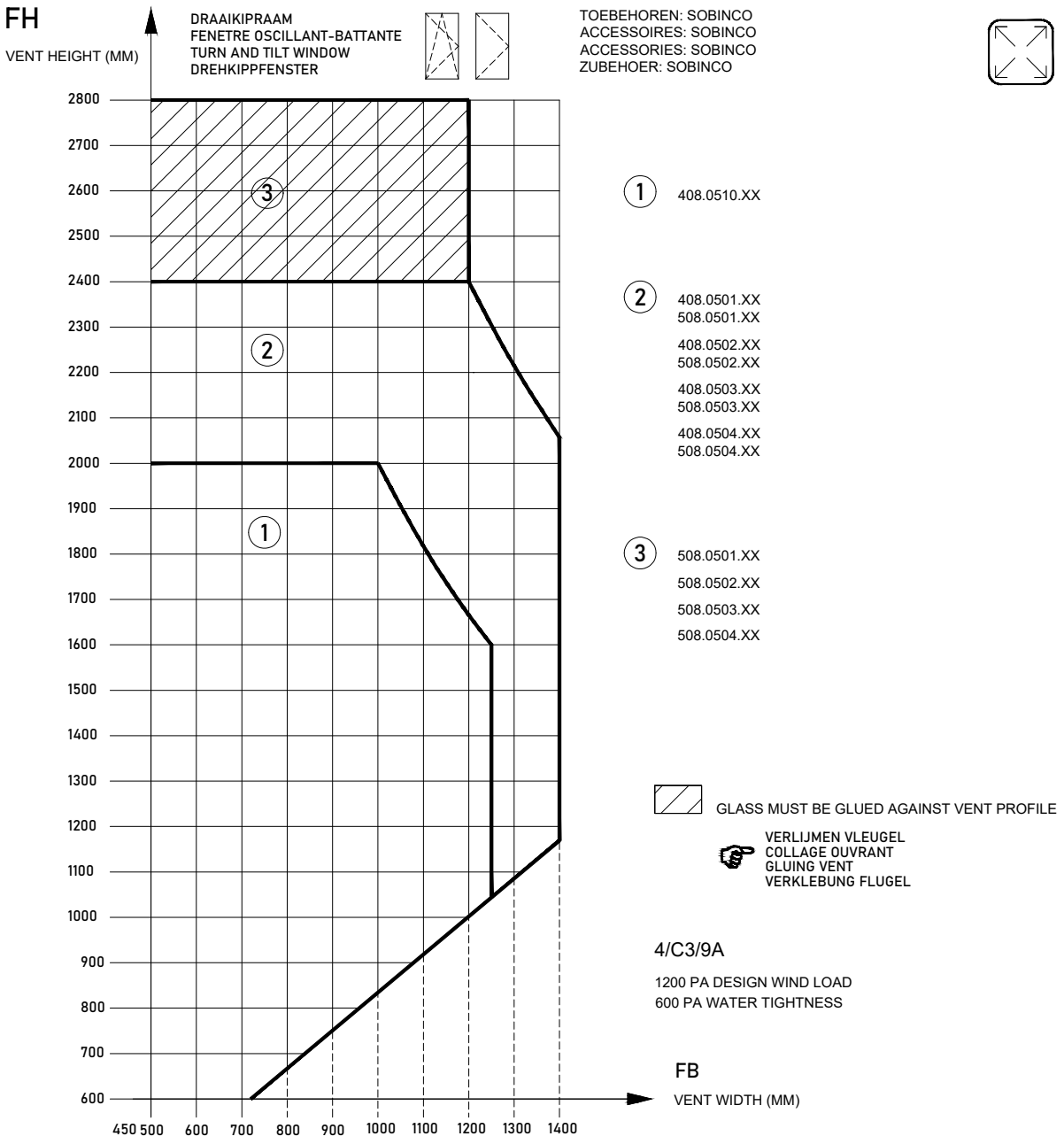

408.0510	120	120	120	108	93	82	73	65		
408.0501 - 508.0501	150	150	150	150	150	150	150	150	135	125
408.0502 - 508.0502	150	150	150	150	150	150	150	150	135	125
408.0503 - 508.0503	150	150	150	150	150	150	150	150	135	125
408.0504 - 508.0504	150	150	150	150	150	150	150	150	135	125
Maximum vent weight (kg) *										

* THE SPECIFIED VENT WEIGHT IS ONLY POSSIBLE WHEN THE CHOSEN ACCESSORIES CAN WITHSTAND THIS LOAD
VENT WEIGHT > 120 KG : GLUING OF GLASS AGAINST VENT PROFILE IS REQUIRED

MAXIMAL DIMENSIONS SOBINCO

MAX. ADMISSIBLE SIZES

MASTERLINE 8-HV

STOLPRAAM
FENETRE DOUBLE OUVRANTE
DOUBLE CASEMENT WINDOW
STULP-DREHFENSTER

TOEBEHOREN: SOBINCO
ACCESSOIRES: SOBINCO
ACCESSORIES: SOBINCO
ZUBEHOER: SOBINCO

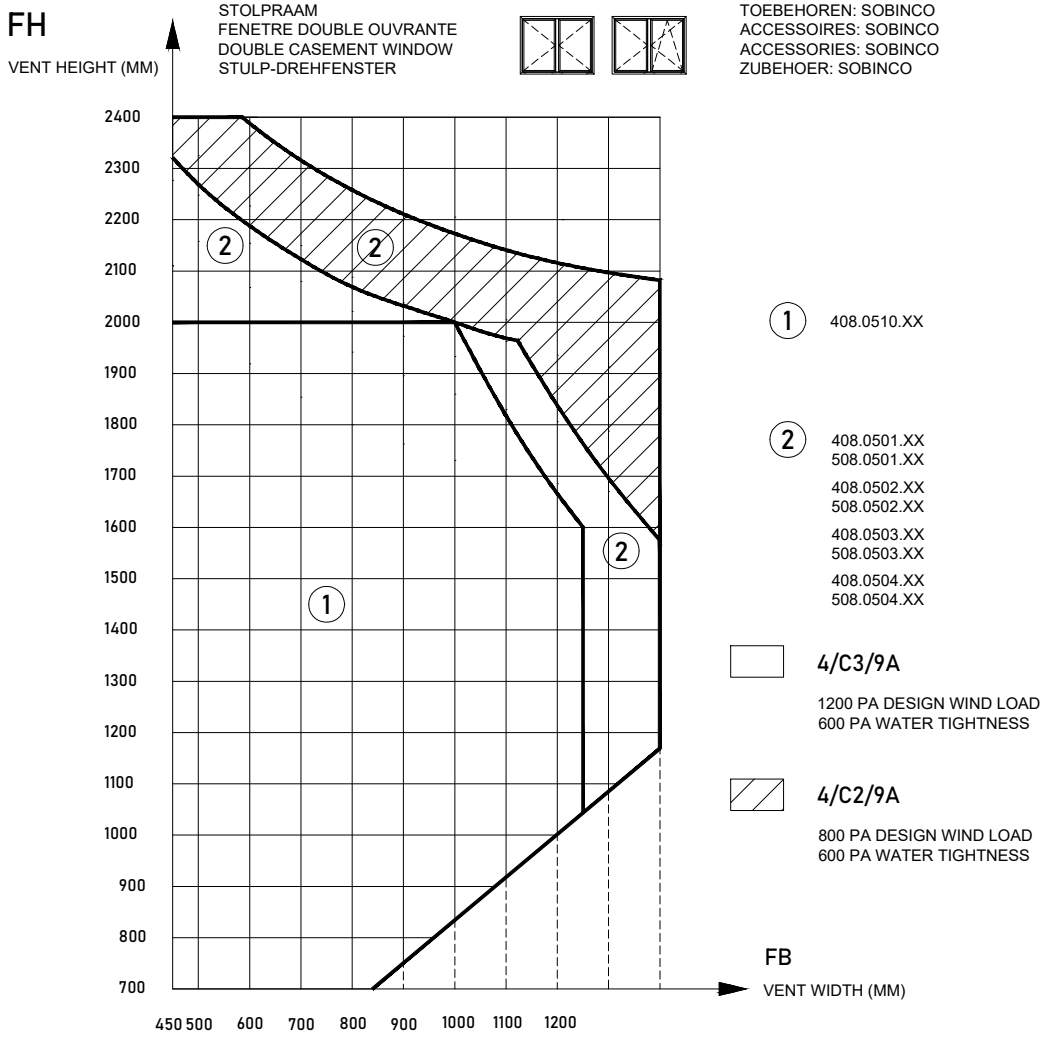

1 408.0510.XX

2 408.0501.XX
508.0501.XX
408.0502.XX
508.0502.XX
408.0503.XX
508.0503.XX
408.0504.XX
508.0504.XX

4/C3/9A

1200 PA DESIGN WIND LOAD
600 PA WATER TIGHTNESS

4/C2/9A

800 PA DESIGN WIND LOAD
600 PA WATER TIGHTNESS

408.0510	120	120	120	108	93	82	73	65		
408.0501 - 508.0501	150	150	150	150	150	150	150	150	135	125
408.0502 - 508.0502	150	150	150	150	150	150	150	150	135	125
408.0503 - 508.0503	150	150	150	150	150	150	150	150	135	125
408.0504 - 508.0504	150	150	150	150	150	150	150	150	135	125

Maximum vent weight (kg) *

* THE SPECIFIED VENT WEIGHT IS ONLY POSSIBLE WHEN THE CHOSEN ACCESSORIES CAN WITHSTAND THIS LOAD.
VENT WEIGHT > 120 KG: GLUING OF GLASS AGAINST VENT PROFILE IS REQUIRED.

MAXIMAL DIMENSIONS SIEGENIA

MAX. ADMISSIBLE SIZES

MASTERLINE 8-HV

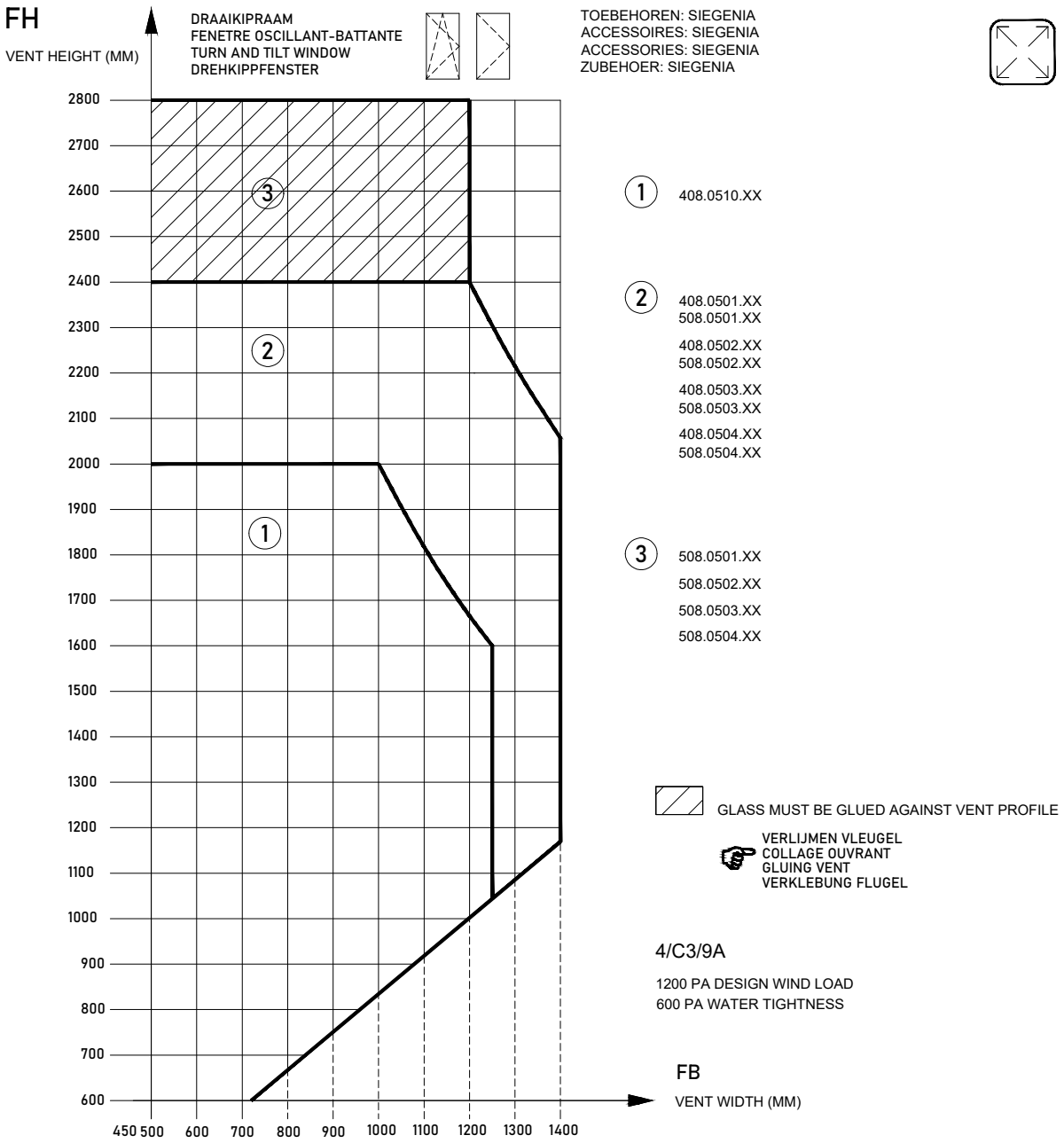

TOEBEHOREN: SIEGENIA
ACCESSOIRES: SIEGENIA
ACCESSORIES: SIEGENIA
ZUBEHOER: SIEGENIA

1 408.0510.XX

2 408.0501.XX
508.0501.XX
408.0502.XX
508.0502.XX
408.0503.XX
508.0503.XX
408.0504.XX
508.0504.XX

3 508.0501.XX
508.0502.XX
508.0503.XX
508.0504.XX

GLASS MUST BE GLUED AGAINST VENT PROFILE

VERLIJMEN VLEUGEL
COLLAGE OUVRANT
GLUING VENT
VERKLEBUNG FLUGEL

4/C3/9A

1200 PA DESIGN WIND LOAD
600 PA WATER TIGHTNESS

408.0510	120	120	120	108	93	82	73	65		
408.0501 - 508.0501	150	150	150	150	150	150	150	150	135	125
408.0502 - 508.0502	150	150	150	150	150	150	150	150	135	125
408.0503 - 508.0503	150	150	150	150	150	150	150	150	135	125
408.0504 - 508.0504	150	150	150	150	150	150	150	150	135	125
Maximum vent weight (kg) *										

* THE SPECIFIED VENT WEIGHT IS ONLY POSSIBLE WHEN THE CHOSEN ACCESSORIES CAN WITHSTAND THIS LOAD
VENT WEIGHT > 120 KG : GLUING OF GLASS AGAINST VENT PROFILE IS REQUIRED

MAXIMAL DIMENSIONS SIEGENIA

MAX. ADMISSIBLE SIZES

MASTERLINE 8-HV

STOLPRAAM
FENETRE DOUBLE OUVRANTE
DOUBLE CASEMENT WINDOW
STULP-DREHFENSTER

TOEBEHOREN: SIEGENIA
ACCESSOIRES: SIEGENIA
ACCESSORIES: SIEGENIA
ZUBEHOER: SIEGENIA

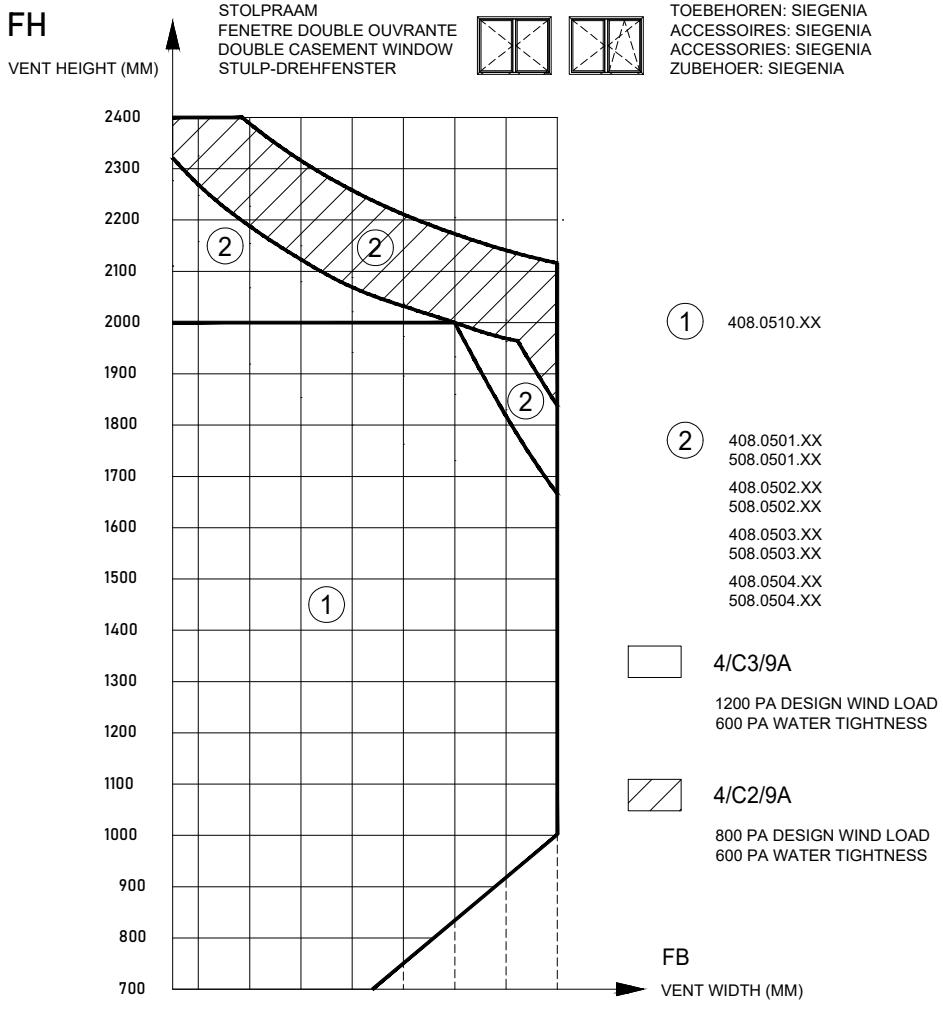

1 408.0510.XX

2 408.0501.XX
508.0501.XX
408.0502.XX
508.0502.XX
408.0503.XX
508.0503.XX
408.0504.XX
508.0504.XX

4/C3/9A
1200 PA DESIGN WIND LOAD
600 PA WATER TIGHTNESS

4/C2/9A
800 PA DESIGN WIND LOAD
600 PA WATER TIGHTNESS

	450	500	600	700	800	900	1000	1100	1200
408.0510	120	120	120	120	108	93	82	73	65
408.0501 - 508.0501	150	150	150	150	150	150	150	150	150
408.0502 - 508.0502	150	150	150	150	150	150	150	150	150
408.0503 - 508.0503	150	150	150	150	150	150	150	150	150
408.0504 - 508.0504	150	150	150	150	150	150	150	150	150

Maximum vent weight (kg) *

* THE SPECIFIED VENT WEIGHT IS ONLY POSSIBLE WHEN THE CHOSEN ACCESSORIES CAN WITHSTAND THIS LOAD.
VENT WEIGHT > 120 KG: GLUING OF GLASS AGAINST VENT PROFILE IS REQUIRED.

Glazing Tables
Beglazingstabellen
Tableaux de vitrage
Verglasungstabellen

Reynaers Aluminium

GLAZING METHOD MASTERLINE 8 RC3

GLAZING METHOD RC3

MASTERLINE 8-De, MASTERLINE 8-Fu, MASTERLINE 8-Re, MASTERLINE 8-Sw

1

Aanbrengen van dichting
Mise en place joint
Insert gasket
Montage Dichtung

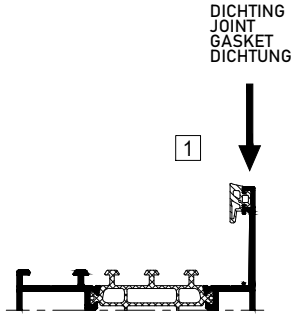

2

Aanbrengen glassteun
Mise en place support cale de vitrage
Insert glazing support
Montage Klotzbrücke

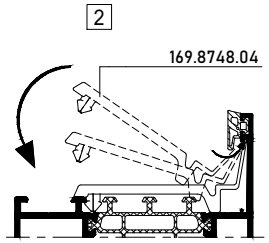

3

Glasplaatsing en opspieën
Pose de vitrage et des cales
Pos. of glass panels with spacers
Verklotzung der Scheibe

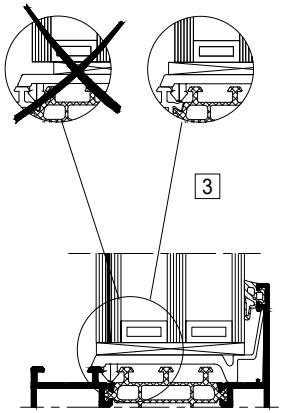

4

Afdichten van glassteunen
Etancher les supports cale
Seal off glass supports
Verglasungsklötze sichern

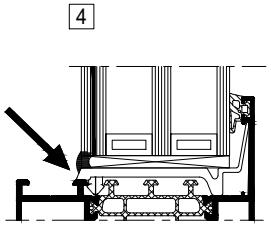

MONTAGEVOLGORDE
L'ORDRE DE MONTAGE
THE ORDER OF ASSEMBLY
MONTAGEREIHENFOLGE
1 2 3 .

5

Aanbrengen van lijm
Application de colle
Application glue
Anbringen verkleben

NOVATIO Seal&Bond MS 50-2K
(or KENT Rotabond 2000 (084.9055.01) or
similar (084.9056.04))

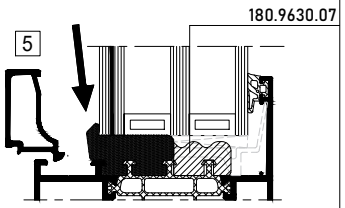

Schematisch aanzicht van verlijming
Vue schématique d'adhésif
Schematic view of adhesive
Schematische Ansicht Klebstoff

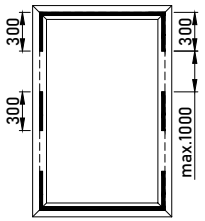

2-COMPONENTENLIJM OVEREENSTEMMEND MET DE VOORSCHRIFTEN VAN DE GLASLEVERANCIER
APPLICATION OF TWO COMPONENT GLUE CORRESPONDING TO THE REQUIREMENTS OF THE GLASS SUPPLIER
APPLICATION DE COLLE A DEUX COMPOSANTS CONFORMEMENT AUX PRESCRIPTIONS DU FOURNISSEUR DE VERRE
ANBRINGEN ZWEIKOMPONENTENKLEBER GEMASS DEN ANFORDERUNGEN DES GLAS LIEFERANTEN

6

Aanbrengen van dichting
Mise en place joint
Insert gasket
Montage Dichtung

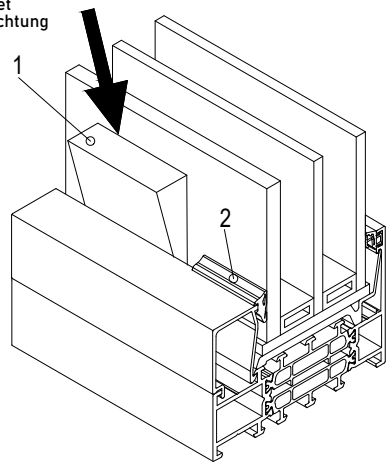

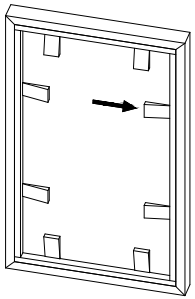

Gereedschap in hout of PVC vergemakkelijkt het plaatsen

Outillage en bois ou PVC facilite le montage

A wooden or PVC spacer can be used to insert glazing gasket

Hilfskeile aus Holz oder Kunststoff verringern die Montagezeiten



GLAZING METHOD MASTERLINE 8

GLAZING METHOD

MASTERLINE 8-De, MASTERLINE 8-Fu, MASTERLINE 8-Re

1

Aanbrengen van een dichting
Mise en place joint
Insert gasket
Montage dichtung

2

Aanbrengen glassteun
Mise en place support cale
Insert glazing support
Montage Klotzbrücke

3

Glasplaatsing en opspieën
Pose de vitrage et des cales
Pos. of glass panels with spacers
Verklotzung der Scheibe

4

Afdichten van glassteunen en aanbrengen van glaslatten

Etancher les supports cale de vitrage et mettre en place les parcloses

Seal off glass supports and clip in beads

Abdichtung Verglasungsklötze und Montage Glasleisten

5

Montage dichting
Mise en place joint
Insert gasket
Montage dichtung

Beglazing kan gebeuren met EPDM-rubbers of met een elastische kitvoeg op glasband. LET OP: geen siliconenkit toepassen op coatex lak!

Le vitrage peut être fait à l'aide de joints en EPDM ou de mastic. ATTENTION: Utilise pas de silicone en cas de lacquage coatex

Glazing can be done by means of EPDM gaskets or an elastic sealant on spacer tape. WARNING: do not use silicone sealant on coatex finish!

Die Eindichtung der Verglasung kann mittels EPDM-Dichtungen oder spritzbarer Dichtstoffen auf Vorlegeband erfolgen. ACHTUNG: keine Silicone verwenden bei coatex Lack

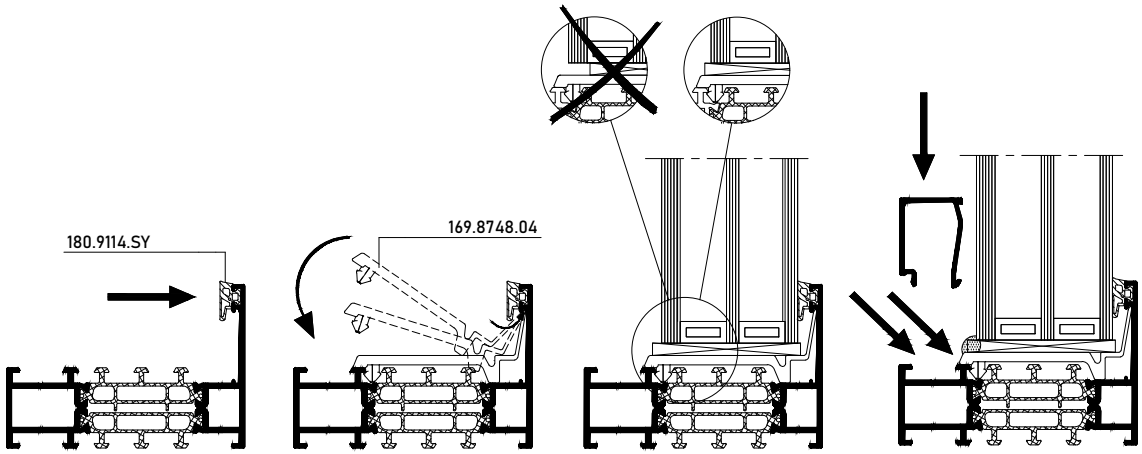

STANDARD
180.9372.04
180.9366.04
180.9368.04

HI / HI+
080.9123.SY
080.9124.SY
080.9125.SY
080.9126.SY
080.9128.SY
080.9130.SY

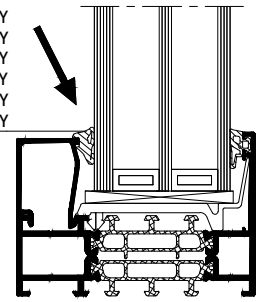

MONTAGEVOLGORDE
L 'ORDRE DE MONTAGE
THE ORDER OF ASSEMBLY
MONTAGEREIHENFOLGE
1 2 3 .

BIJKOMENDE INFO VOORBEREIDING/VERWERKING -> ZIE 'VERWERKINGSVOORSCHRIFTEN' !
INFO COMPLEMENTAIRE PREPARATION/USINAGE -> VOIR 'PRESCRIPTIONS DE MISE EN OEUVRE' !
ADDITIONAL INFO PREPARATION/PROCESSING -> SEE 'PROCESSING DATA' !
ZUSAETZLICHE INFO VORBEREITUNG/VERARBEITUNG -> SIEHE 'VERARBEITUNGSVORSCHRIFTEN' !

Gereedschap in hout of PVC vergemakkelijkt het plaatsen

Outillage en bois ou PVC facilite le montage

A wooden or PVC spacer can be used to insert glazing gasket

Hilfskeile aus Holz oder Kunststoff verringern die Montagezeiten

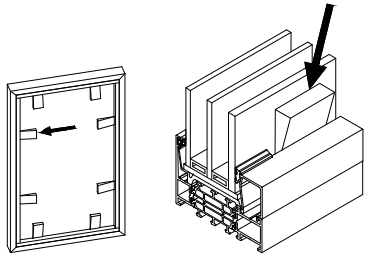

GLAZING METHOD MASTERLINE 8

GLAZING METHOD

MASTERLINE 8-De, MASTERLINE 8-Fu, MASTERLINE 8-Re

STANDARD GLAZING BEADS
P < 800 Pa WxH < 3200 x 3200 MM
P < 1600 Pa WxH < 1400 x 2400 MM
TUBULAR GLAZING BEADS
P < 2000 Pa WxH < 3200 x 3200 MM

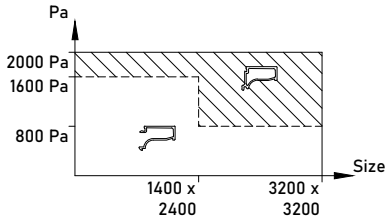

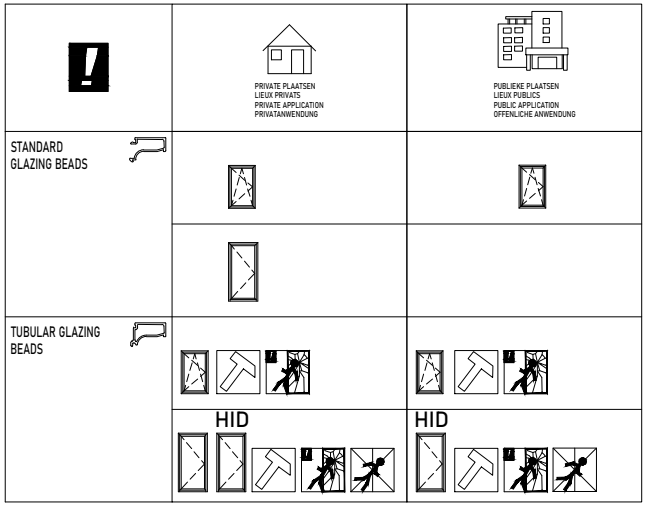

VALVALBEVEILIGING
PRÉVENTION DES CHUTES
FALL PREVENTION
STURZPRÄVENTION

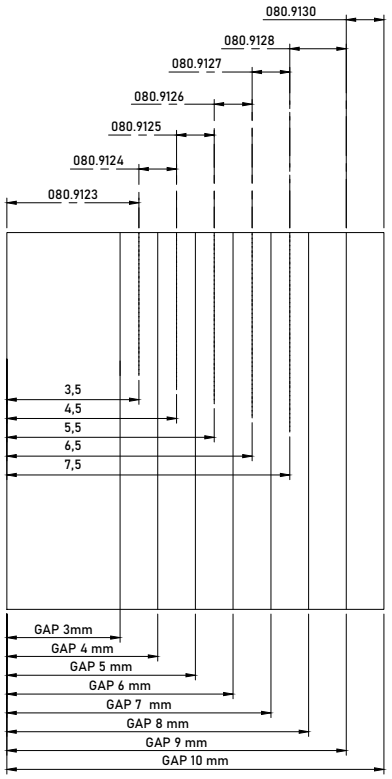

Gebruiksgebied binnenbeglazingsdichtingen
Champ d'application des joints de vitrage intérieur
Field of application of inner glazing gaskets
Anwendungsbereich der inneren Verglasungsdichtungen

De beglazingstabellen zijn op basis van theoretische glasmaten
LET OP: Hou steeds rekening met de finale glassamenstelling om de juiste dichting te bepalen.
Diktetolerantie volgens DIN EN 1279-1:2018-10

Les tableaux de vitrage sont basés sur des tailles de verre théoriques.
ATTENTION : Toujours tenir compte de la composition finale du verre pour déterminer le joint correct.
Tolérance d'épaisseur selon la norme DIN EN 1279-1:2018-10

The glazing tables are based on theoretical glass sizes
ATTENTION: Always take into account the final glass composition to determine the correct gasket.
Thickness tolerance according to DIN EN 1279-1:2018-10

Die Verglasungstabellen beruhen auf theoretischen Glasgrößen
ACHTUNG: Berücksichtigen Sie immer die endgültige Glaszusammensetzung, um die richtige Verglasungsdichtung zu bestimmen.
Dickentoleranz nach DIN EN 1279-1:2018-10

GLAZING METHOD MASTERLINE 8

GLAZING METHOD

MASTERLINE 8-De, MASTERLINE 8-Fu, MASTERLINE 8-Re

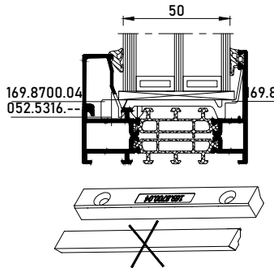

* GLASS THICKNESS > 50MM :
PLACE ADDITIONAL GLASS SUPPORT 169.8700.04
WHEN USING STANDARD GLASS SUPPORT 169.8748.04

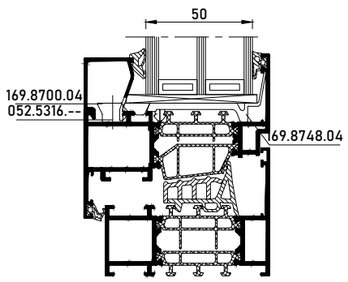

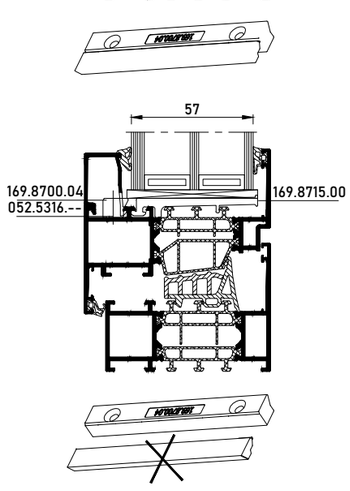

** GLASS THICKNESS > 57MM :
PLACE ADDITIONAL GLASS SUPPORT 169.8700.04
WHEN USING HIW GLASS SUPPORT 169.8715.00

095.C500.00 095.C600.00
197.H200.00

030.3611.XX
030.3610.XX
030.3609.XX



030.3607.XX
030.3608.XX

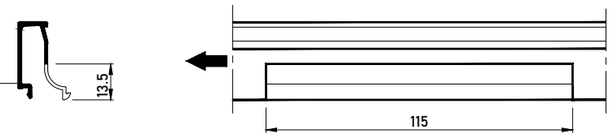

030.3200.XX
030.3606.XX
030.3626.XX
030.3621.XX
004.3328.XX

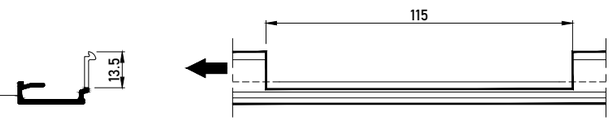

130.3644.XX
130.3645.XX

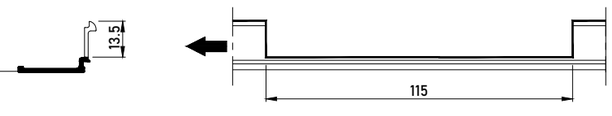

095.B300.00

130.3647.XX 130.3654.XX
130.3648.XX 130.3655.XX
130.3649.XX 130.3656.XX
130.3650.XX 130.3657.XX
130.3651.XX 130.3658.XX
130.3652.XX 130.3659.XX
130.3653.XX

130.3647.XX
130.3648.XX
130.3649.XX
130.3650.XX
...

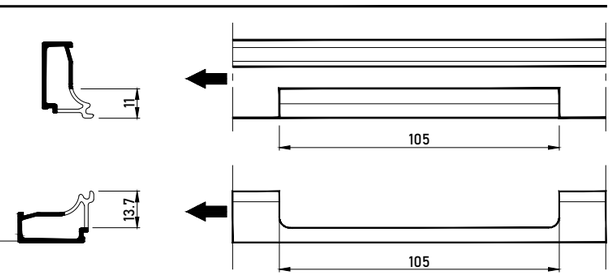

VERLIJMEN BIJKOMENDE GLASSTEUN
COLLAGE SUPPORT SUPPLEMENTAIRE
GLUING ADDITIONAL SUPPORT
VERKLEBUNG ZUSAETZLICHES GLASAUFLAGEPROFIL

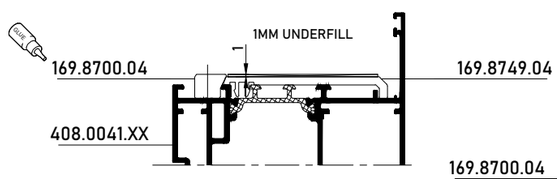

169.8700.04

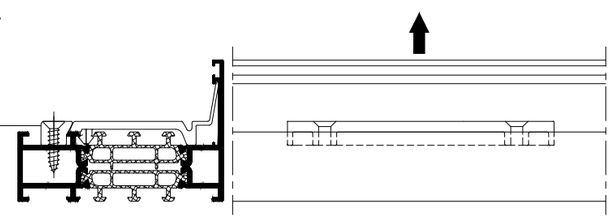

BIJKOMENDE INFO VOORBEREIDING/VERWERKING -> ZIE HOOFDSTUK F 'VERWERKINGSVOORSCHRIFTEN' !
INFO COMPLEMENTAIRE PREPARATION/USINAGE -> VOIR CHAPITRE F 'PRESCRIPTIONS DE MISE EN OEUVRE' !
ADDITIONAL INFO PREPARATION/PROCESSING -> SEE CHAPTER F 'PROCESSING DATA' !
ZUSAETZLICHE INFO VORBEREITUNG/VERARBEITUNG -> SIEHE KAPITEL F 'VERARBEITUNGSVORSCHRIFTEN' !

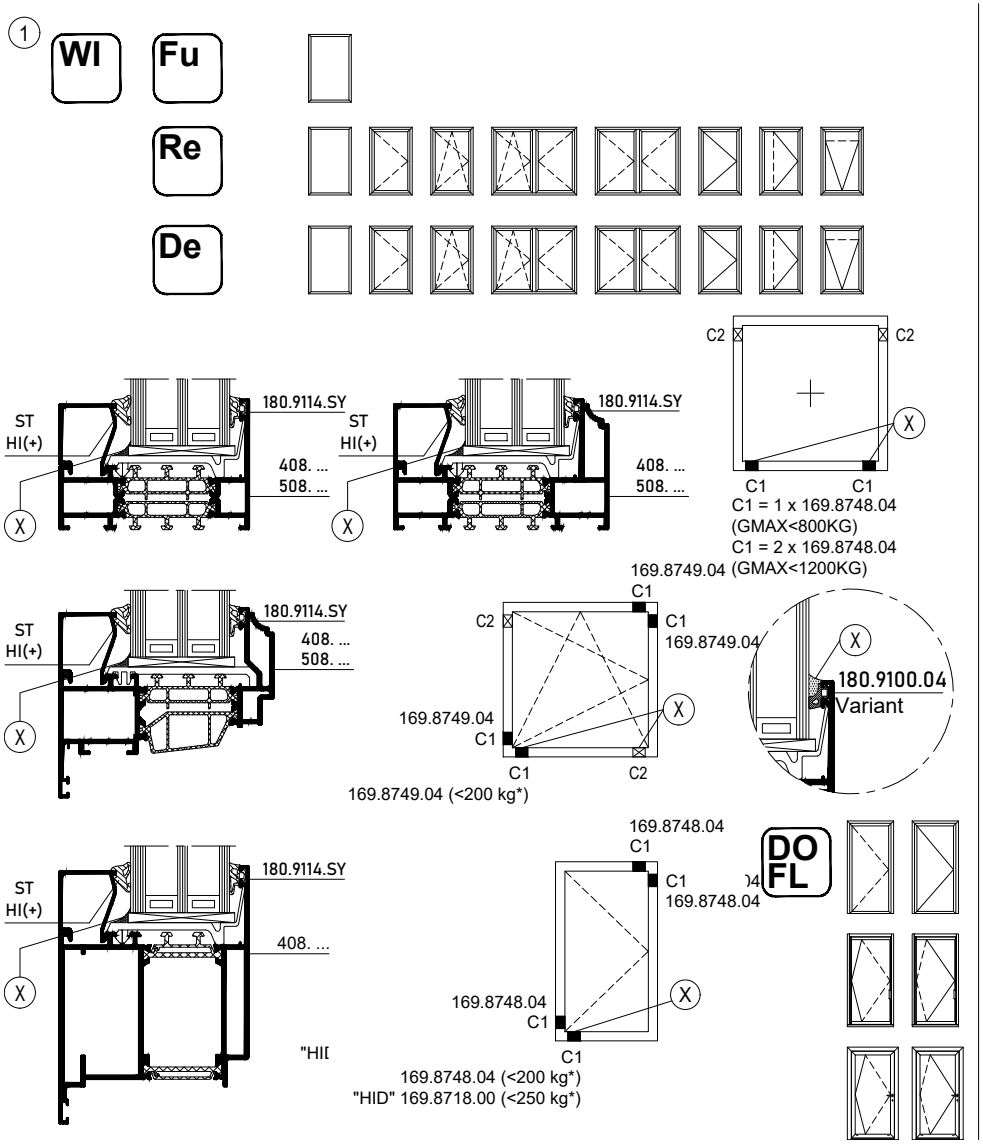

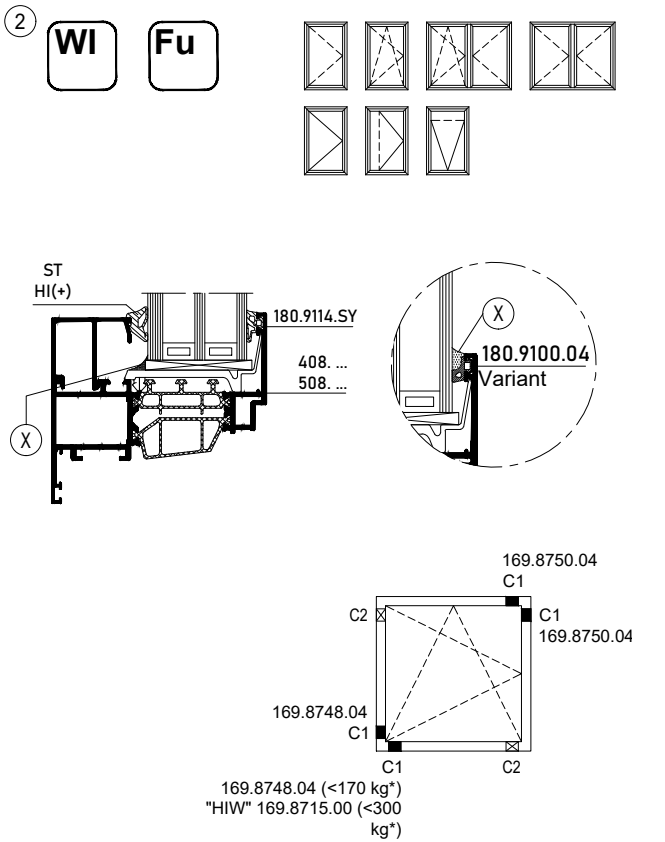

STANDARD GLAZING BEADS P < 800 Pa WxH < 3200 x 3200 MM P < 1600 Pa WxH < 1400 x 2400 MM TUBULAR GLAZING BEADS P < 2000 Pa WxH < 3200 x 3200 MM	BEGLAZINGSMETHODE METHODE DE VITRAGE GLAZING METHOD VERGLASUNGSWEISE

GLAZING TABLE MASTERLINE 8-Fu Re De

GLAZING TABLES

MASTERLINE 8-De, MASTERLINE 8-Fu, MASTERLINE 8-Re

gasket outside	glass size 1	glass size 2	gasket inside	glazing bead	
		13	- 080.9130.SY	030.3620.XX -	
180.9114.SY	4	14	080.9128.SY 080.9128.SY	030.3620.XX -	
180.9114.SY	5	15	080.9128.SY 080.9128.SY	030.3620.XX -	
180.9114.SY	6	16	080.9127.SY 080.9127.SY	030.3620.XX -	
180.9114.SY	7	17	080.9126.SY 080.9126.SY	030.3620.XX -	
180.9114.SY	8	18	080.9125.SY 080.9125.SY	030.3620.XX -	
180.9114.SY	9	19	080.9127.SY 080.9127.SY	030.3623.XX -	
180.9114.SY	10	20	080.9126.SY 080.9126.SY	030.3623.XX -	
180.9114.SY	11	21	080.9125.SY 080.9125.SY	030.3623.XX -	
180.9114.SY	12	22	080.9127.SY 080.9127.SY	030.3622.XX -	
180.9114.SY	13	23	080.9126.SY 080.9126.SY	030.3622.XX -	
180.9114.SY	14	24	080.9125.SY 080.9125.SY	030.3622.XX -	
180.9114.SY	15	25	080.9127.SY 080.9127.SY	030.3619.XX 130.3659.XX	3
180.9114.SY	16	26	080.9126.SY 080.9126.SY	030.3619.XX 130.3659.XX	3
180.9114.SY	17	27	080.9125.SY 080.9125.SY	030.3619.XX 130.3659.XX	3
180.9114.SY	18	28	080.9127.SY 080.9127.SY	030.3618.XX 130.3658.XX	3
180.9114.SY	19	29	080.9126.SY 080.9126.SY	030.3618.XX 130.3658.XX	3
180.9114.SY	20	30	080.9125.SY 080.9125.SY	030.3618.XX 130.3658.XX	3
180.9114.SY	21	31	080.9127.SY 080.9127.SY	030.3617.XX 130.3657.XX	3
180.9114.SY	22	32	080.9126.SY 080.9126.SY	030.3617.XX 130.3657.XX	3

gasket outside	glass size 1	glass size 2	gasket inside	glazing bead	
180.9114.SY	23	33	080.9125.SY 080.9125.SY	030.3617.XX 130.3657.XX	3
180.9114.SY	24	34	080.9127.SY 080.9127.SY	030.3616.XX 130.3656.XX	3
180.9114.SY	25	35	080.9126.SY 080.9126.SY	030.3616.XX 130.3656.XX	3
180.9114.SY	26	36	080.9125.SY 080.9125.SY	030.3616.XX 130.3656.XX	3
180.9114.SY	27	37	080.9127.SY 080.9127.SY	030.3615.XX 130.3655.XX	3
180.9114.SY	28	38	080.9126.SY 080.9126.SY	030.3615.XX 130.3655.XX	3
180.9114.SY	29	39	080.9125.SY 080.9125.SY	030.3615.XX 130.3655.XX	3
180.9114.SY	30	40	080.9127.SY 080.9127.SY	030.3614.XX 130.3654.XX	3
180.9114.SY	31	41	080.9126.SY 080.9126.SY	030.3614.XX 130.3654.XX	3
180.9114.SY	32	42	080.9125.SY 080.9125.SY	030.3614.XX 130.3654.XX	3
180.9114.SY	33	43	080.9127.SY 080.9127.SY	030.3613.XX 130.3653.XX	3
180.9114.SY	34	44	080.9126.SY 080.9126.SY	030.3613.XX 130.3653.XX	3
180.9114.SY	35	45	080.9125.SY 080.9125.SY	030.3613.XX 130.3653.XX	3
180.9114.SY	36	46	080.9127.SY 080.9127.SY	030.3612.XX 130.3652.XX	3
180.9114.SY	37	47	080.9126.SY 080.9126.SY	030.3612.XX 130.3652.XX	3
180.9114.SY	38	48	080.9125.SY 080.9125.SY	030.3612.XX 130.3652.XX	3
180.9114.SY	39	49	080.9127.SY 080.9127.SY	030.3611.XX 130.3651.XX	3
180.9114.SY	40	50	080.9126.SY 080.9126.SY	030.3611.XX 130.3651.XX	3
180.9114.SY	41	51	080.9125.SY 080.9125.SY	030.3611.XX 130.3651.XX	3
180.9114.SY	42	52	080.9127.SY 080.9127.SY	030.3610.XX 130.3650.XX	3

gasket outside	glass size 1	glass size 2	gasket inside	glazing bead	
180.9114.SY	43	53	080.9126.SY 080.9126.SY	030.3610.XX 130.3650.XX	3
180.9114.SY	44	54	080.9125.SY 080.9125.SY	030.3610.XX 130.3650.XX	3
180.9114.SY	45	55	080.9127.SY 080.9127.SY	030.3609.XX 130.3649.XX	3
180.9114.SY	46	56	080.9126.SY 080.9126.SY	030.3609.XX 130.3649.XX	3
180.9114.SY	47	57	080.9125.SY 080.9125.SY	030.3609.XX 130.3649.XX	3
180.9114.SY	48	58	080.9127.SY 080.9127.SY	030.3608.XX 130.3648.XX	3
180.9114.SY	49	59	080.9126.SY 080.9126.SY	030.3608.XX 130.3648.XX	3
180.9114.SY	50	60	080.9125.SY 080.9125.SY	030.3608.XX 130.3648.XX	3
180.9114.SY	51	61	080.9127.SY 080.9127.SY	030.3607.XX 130.3647.XX	3
180.9114.SY	52	62	080.9126.SY 080.9126.SY	030.3607.XX 130.3647.XX	3
180.9114.SY	53	63	080.9125.SY 080.9125.SY	030.3607.XX 130.3647.XX	3
180.9114.SY	54	64	080.9127.SY 080.9127.SY	030.3606.XX 130.3646.XX	2
180.9114.SY	55	65	080.9126.SY 080.9126.SY	030.3606.XX 130.3646.XX	2
180.9114.SY	56	66	080.9125.SY 080.9125.SY	030.3606.XX 130.3646.XX	2
180.9114.SY	57	67	080.9127.SY 080.9127.SY	- 130.3645.XX	2
180.9114.SY	58	68	080.9126.SY 080.9126.SY	- 130.3645.XX	2
180.9114.SY	59	69	080.9125.SY 080.9125.SY	- 130.3645.XX	2
180.9114.SY	60	70	080.9127.SY 080.9127.SY	- 130.3644.XX	2
180.9114.SY	61	71	080.9126.SY 080.9126.SY	- 130.3644.XX	2
180.9114.SY	62	72	080.9125.SY 080.9125.SY	- 130.3644.XX	2

FROM GLASS THICKNESS > 50MM :
PLACE ADDITIONAL GLASS SUPPORT 169.8700.04 WHEN USING STANDARD GLASS SUPPORT 169.8748.04

FROM GLASS THICKNESS > 50MM :
PLACE ADDITIONAL GLASS SUPPORT 169.8700.04 WHEN USING STANDARD GLASS SUPPORT 169.8749.04

GLAZING METHOD

FROM GLASS THICKNESS > 45MM :
PLACE ADDITIONAL GLASS SUPPORT 169.8700.04 WHEN USING HID GLASS SUPPORT 169.8718.00

FROM GLASS THICKNESS > 55MM :
PLACE ADDITIONAL GLASS SUPPORT 169.8700.04 WHEN USING HIW GLASS SUPPORT 169.8715.00

GLAZING TABLE MASTERLINE 8-Fu Re De

WI Fu

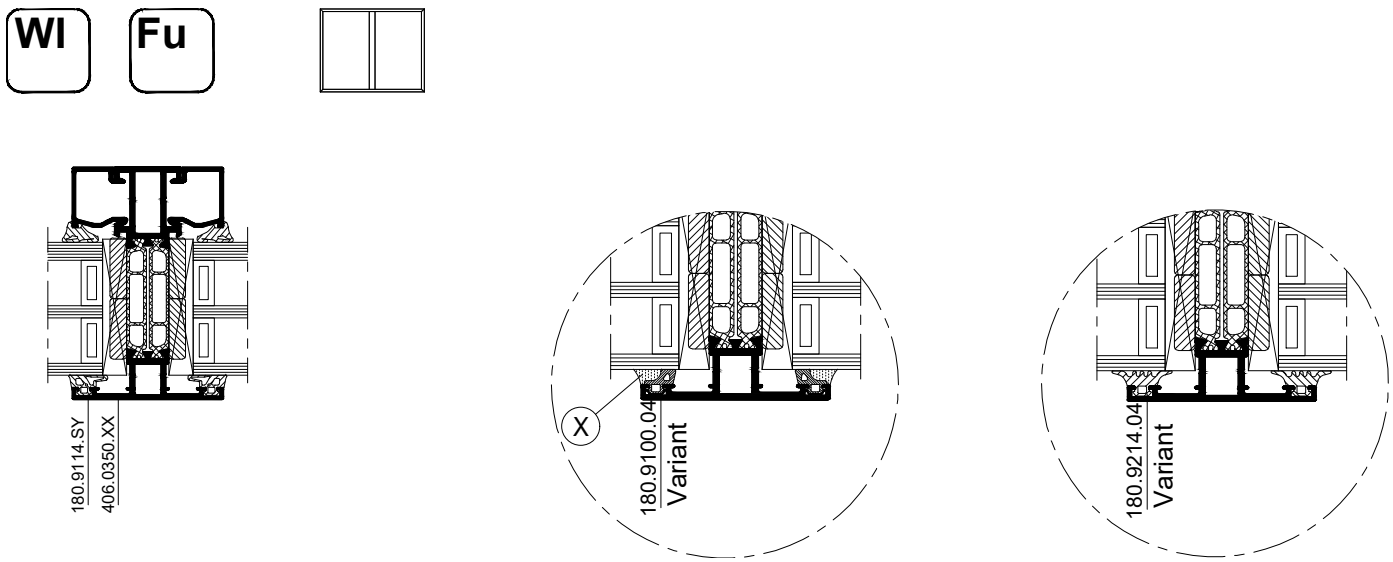

GLAZING TABLE MASTERLINE 8-Fu Re De

GLAZING TABLES

MASTERLINE 8-De, MASTERLINE 8-Fu, MASTERLINE 8-Re

		HI/HI+	
glass outside	glass size	gasket inside	glazing bead
180.9114.SY	18	- 080.9130.SY	- 002.0697.XX
180.9114.SY	19	- 080.9128.SY	- 002.0697.XX
180.9114.SY	20	- 080.9128.SY	- 002.0697.XX
180.9114.SY	21	- 080.9127.SY	- 002.0697.XX
180.9114.SY	22	- 080.9126.SY	- 002.0697.XX
180.9114.SY	23	- 080.9125.SY	- 002.0697.XX
180.9114.SY	24	- 080.9127.SY	- 002.0696.XX
180.9114.SY	25	- 080.9126.SY	- 002.0696.XX
180.9114.SY	26	- 080.9125.SY	- 002.0696.XX
180.9114.SY	27	- 080.9127.SY	- 002.0690.XX
180.9114.SY	28	- 080.9126.SY	- 002.0690.XX
180.9114.SY	29	- 080.9125.SY	- 002.0690.XX
180.9114.SY	30	- 080.9127.SY	- 002.0691.XX
180.9114.SY	31	- 080.9126.SY	- 002.0691.XX
180.9114.SY	32	- 080.9125.SY	- 002.0691.XX
180.9114.SY	33	- 080.9127.SY	- 002.0689.XX
180.9114.SY	34	- 080.9126.SY	- 002.0689.XX
180.9114.SY	35	- 080.9125.SY	- 002.0689.XX

		HI/HI+	
glass outside	glass size	gasket inside	glazing bead
180.9114.SY	36	- 080.9127.SY	- 002.0692.XX
180.9114.SY	37	- 080.9126.SY	- 002.0692.XX
180.9114.SY	38	- 080.9125.SY	- 002.0692.XX
180.9114.SY	39	- 080.9127.SY	- 002.0681.XX
180.9114.SY	40	- 080.9126.SY	- 002.0681.XX
180.9114.SY	41	- 080.9125.SY	- 002.0681.XX
180.9114.SY	42	- 080.9127.SY	- 002.0680.XX
180.9114.SY	43	- 080.9126.SY	- 002.0680.XX
180.9114.SY	44	- 080.9125.SY	- 002.0680.XX
180.9114.SY	45	- 080.9127.SY	- 002.0679.XX
180.9114.SY	46	- 080.9126.SY	- 002.0679.XX
180.9114.SY	47	- 080.9125.SY	- 002.0679.XX
180.9114.SY	48	- 080.9127.SY	- 002.0678.XX
180.9114.SY	49	- 080.9126.SY	- 002.0678.XX
180.9114.SY	50	- 080.9125.SY	- 002.0678.XX
180.9114.SY	51	- 080.9127.SY	- 002.1677.XX
180.9114.SY	52	- 080.9126.SY	- 002.1677.XX
180.9114.SY	53	- 080.9125.SY	- 002.1677.XX

		HI/HI+	
glass outside	glass size	gasket inside	glazing bead
180.9114.SY	54	- 080.9127.SY	- 002.1676.XX
180.9114.SY	55	- 080.9126.SY	- 002.1676.XX
180.9114.SY	56	- 080.9125.SY	- 002.1676.XX
180.9114.SY	57	- 080.9127.SY	- 002.0609.XX
180.9114.SY	58	- 080.9126.SY	- 002.0609.XX
180.9114.SY	59	- 080.9125.SY	- 002.0609.XX

GLAZING TABLE MASTERLINE 8-Fu Re De

GLAZING TABLES

MASTERLINE 8-De, MASTERLINE 8-Fu, MASTERLINE 8-Re

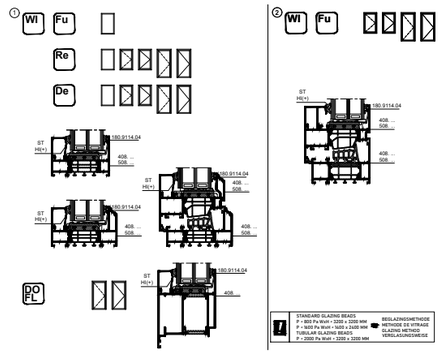

GLAZING TABLE MASTERLINE 8-Fu Re De

GLAZING TABLES

MASTERLINE 8-De, MASTERLINE 8-Fu, MASTERLINE 8-Re

gasket outside	glass size ①	glass size ②	gasket inside ST	gasket inside HI/HI+RC	glazing bead	
180.9114.SY	-	13	080.9130.SY	030.3620.XX		
			080.9130.SY	-		
180.9114.SY	4	14	080.9128.SY	030.3620.XX		
			080.9128.SY	-		
180.9114.SY	5	15	080.9128.SY	030.3620.XX		
			080.9128.SY	-		
180.9114.SY	6	16	080.9127.SY	030.3620.XX		
			080.9127.SY	-		
180.9114.SY	7	17	080.9126.SY	030.3620.XX		
			080.9126.SY	-		
180.9114.SY	8	18	080.9125.SY	030.3620.XX		
			080.9125.SY	-		
180.9114.SY	9	19	080.9124.SY	030.3620.XX		
			080.9124.SY	-		
180.9114.SY	10	20	080.9126.SY	030.3623.XX		
			080.9126.SY	-		
180.9114.SY	11	21	080.9125.SY	030.3623.XX		
			080.9125.SY	-		
180.9114.SY	12	22	080.9130.SY	-		
			080.9130.SY	130.3659.XX	3	
180.9114.SY	12	22	080.9124.SY	030.3623.XX		
			080.9124.SY	-		
180.9114.SY	13	23	080.9128.SY-	-		
			080.9128.SY-	130.3659.XX	3	
180.9114.SY	13	23	080.9126.SY	030.3622.XX		
			080.9126.SY	-		
180.9114.SY	14	24	080.9128.SY	-		
			080.9128.SY	130.3659.XX	3	
180.9114.SY	14	24	080.9125.SY	030.3622.XX		
			080.9125.SY	-		
180.9114.SY	15	25	080.9127.SY	-		
			080.9127.SY	130.3659.XX	3	
180.9114.SY	15	25	080.9124.SY	030.3622.XX		
			080.9124.SY	-		
180.9114.SY	16	26	080.9126.SY	030.3619.XX		
			080.9126.SY	130.3659.XX	3	
180.9114.SY	17	27	080.9125.SY	030.3619.XX		
			080.9125.SY	130.3659.XX	3	
180.9114.SY	18	28	080.9124.SY	030.3619.XX		
			080.9124.SY	130.3659.XX	3	
180.9114.SY	19	29	080.9126.SY	030.3618.XX		
			080.9126.SY	130.3658.XX	3	
180.9114.SY	20	30	080.9125.SY	030.3618.XX		
			080.9125.SY	130.3658.XX	3	

gasket outside	glass size ①	glass size ②	gasket inside ST	gasket inside HI/HI+RC	glazing bead	
180.9114.SY	21	31	080.9124.SY	030.3618.XX		
			080.9124.SY	130.3658.XX	3	
180.9114.SY	22	32	080.9126.SY	030.3617.XX		
			080.9126.SY	130.3657.XX	3	
180.9114.SY	23	33	080.9125.SY	030.3617.XX		
			080.9125.SY	130.3657.XX	3	
180.9114.SY	24	34	080.9124.SY	030.3617.XX		
			080.9124.SY	130.3657.XX	3	
180.9114.SY	25	35	080.9126.SY	030.3616.XX		
			080.9126.SY	130.3656.XX	3	
180.9114.SY	26	36	080.9125.SY	030.3616.XX		
			080.9125.SY	130.3656.XX	3	
180.9114.SY	27	37	080.9124.SY	030.3616.XX		
			080.9124.SY	130.3656.XX	3	
180.9114.SY	28	38	080.9126.SY	030.3615.XX		
			080.9126.SY	130.3655.XX	3	
180.9114.SY	29	39	080.9125.SY	030.3615.XX		
			080.9125.SY	130.3655.XX	3	
180.9114.SY	30	40	080.9124.SY	030.3615.XX		
			080.9124.SY	130.3655.XX	3	
180.9114.SY	31	41	080.9126.SY	030.3614.XX		
			080.9126.SY	130.3654.XX	3	
180.9114.SY	32	42	080.9125.SY	030.3614.XX		
			080.9125.SY	130.3654.XX	3	
180.9114.SY	33	43	080.9124.SY	030.3614.XX		
			080.9124.SY	130.3654.XX	3	
180.9114.SY	34	44	080.9126.SY	030.3613.XX		
			080.9126.SY	130.3653.XX	3	
180.9114.SY	35	45	080.9125.SY	030.3613.XX		
			080.9125.SY	130.3653.XX	3	
180.9114.SY	36	46	080.9124.SY	030.3613.XX		
			080.9124.SY	130.3653.XX	3	
180.9114.SY	37	47	080.9126.SY	030.3612.XX		
			080.9126.SY	130.3652.XX	3	
180.9114.SY	38	48	080.9125.SY	030.3612.XX		
			080.9125.SY	130.3652.XX	3	
180.9114.SY	39	49	080.9124.SY	030.3612.XX		
			080.9124.SY	130.3652.XX	3	
180.9114.SY	40	50	080.9126.SY	030.3611.XX		
			080.9126.SY	130.3651.XX	3	
180.9114.SY	41	51	080.9125.SY	030.3611.XX		
			080.9125.SY	130.3651.XX	3	
180.9114.SY	42	52	080.9124.SY	030.3611.XX		
			080.9124.SY	130.3651.XX	3	

gasket outside	glass size ①	glass size ②	gasket inside ST	gasket inside HI/HI+RC	glazing bead	
180.9114.SY	43	53	080.9126.SY	030.3610.XX		
			080.9126.SY	130.3650.XX	3	
180.9114.SY	44	54	080.9125.SY	030.3610.XX		
			080.9125.SY	130.3650.XX	3	
180.9114.SY	45	55	080.9124.SY	030.3610.XX		
			080.9124.SY	130.3650.XX	3	
180.9114.SY	46	56	080.9126.SY	030.3609.XX		
			080.9126.SY	130.3649.XX	3	
180.9114.SY	47	57	080.9125.SY	030.3609.XX		
			080.9125.SY	130.3649.XX	3	
180.9114.SY	48	58	080.9124.SY	030.3609.XX		
			080.9124.SY	130.3649.XX	3	
180.9114.SY	49	59	080.9126.SY	030.3608.XX		
			080.9126.SY	130.3648.XX	3	
180.9114.SY	50	60	080.9125.SY	030.3608.XX		
			080.9125.SY	130.3648.XX	3	
180.9114.SY	51	61	080.9124.SY	030.3608.XX		
			080.9124.SY	130.3648.XX	3	
180.9114.SY	52	62	080.9126.SY	030.3607.XX		
			080.9126.SY	130.3647.XX	3	
180.9114.SY	53	63	080.9125.SY	030.3607.XX		
			080.9125.SY	130.3647.XX	3	
180.9114.SY	54	64	080.9124.SY	030.3607.XX		
			080.9124.SY	130.3647.XX	3	
180.9114.SY	55	65	080.9126.SY	030.3606.XX		
			080.9126.SY	130.3646.XX	2	
180.9114.SY	56	66	080.9125.SY	030.3606.XX		
			080.9125.SY	130.3646.XX	2	
180.9114.SY	57	67	080.9124.SY	030.3606.XX		
			080.9124.SY	130.3646.XX	2	
180.9114.SY	58	68	080.9126.SY	-		
			080.9126.SY	130.3645.XX	2	
180.9114.SY	59	69	080.9125.SY	-		
			080.9125.SY	130.3645.XX	2	
180.9114.SY	60	70	080.9124.SY	-		
			080.9124.SY	130.3645.XX	2	
180.9114.SY	61	71	080.9126.SY	-		
			080.9126.SY	130.3644.XX	2	
180.9114.SY	62	72	080.9125.SY	-		
			080.9125.SY	130.3644.XX	2	

GLAZING TABLE MASTERLINE 8-Fu Re De

WI Re

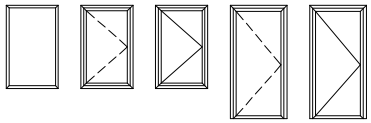

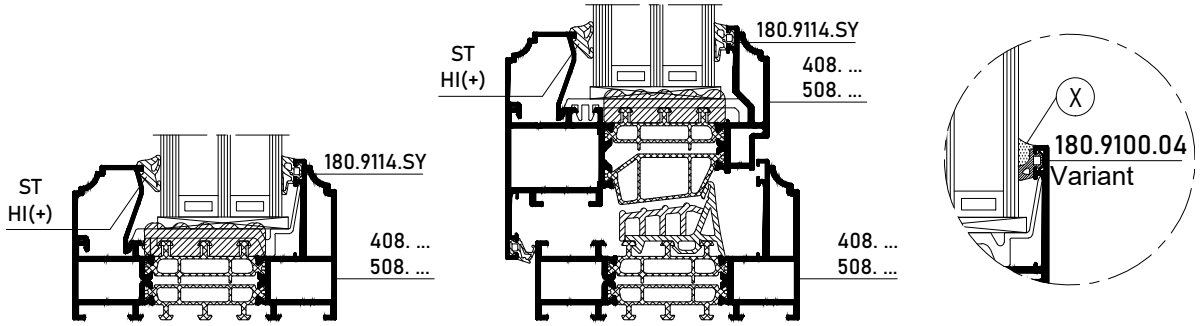

!	STANDARD GLAZING BEADS P < 800 Pa WxH < 3200 x 3200 MM P < 1600 Pa WxH < 1400 x 2400 MM TUBULAR GLAZING BEADS P < 2000 Pa WxH < 3200 x 3200 MM	BEGLAZINGSMETHODE METHODE DE VITRAGE GLAZING METHOD VERGLASUNGSWEISE

glass outside	glass size	gasket inside	glazing bead
180.9114.SY	27	080.9130.SY	130.0206.XX
180.9114.SY	28	080.9128.SY	130.0206.XX
180.9114.SY	29	080.9128.SY	130.0206.XX
180.9114.SY	30	080.9127.SY	130.0206.XX
180.9114.SY	31	080.9126.SY	130.0206.XX
180.9114.SY	32	080.9125.SY	130.0206.XX
180.9114.SY	33	080.9124.SY	130.0206.XX
	34		
	35		
180.9114.SY	36	080.9130.SY	130.0203.XX
180.9114.SY	37	080.9128.SY	130.0203.XX
180.9114.SY	38	080.9128.SY	130.0203.XX
180.9114.SY	39	080.9127.SY	130.0203.XX
180.9114.SY	40	080.9126.SY	130.0203.XX
180.9114.SY	41	080.9125.SY	130.0203.XX
180.9114.SY	42	080.9124.SY	130.0203.XX
	43		
	44		

glass outside	glass size	gasket inside	glazing bead
180.9114.SY	45	080.9130.SY	130.0200.XX
180.9114.SY	46	080.9128.SY	130.0200.XX
180.9114.SY	47	080.9128.SY	130.0200.XX
180.9114.SY	48	080.9127.SY	130.0200.XX
180.9114.SY	49	080.9126.SY	130.0200.XX
180.9114.SY	50	080.9125.SY	130.0200.XX
180.9114.SY	51	080.9124.SY	130.0200.XX

1

WI

Fu

Re

De

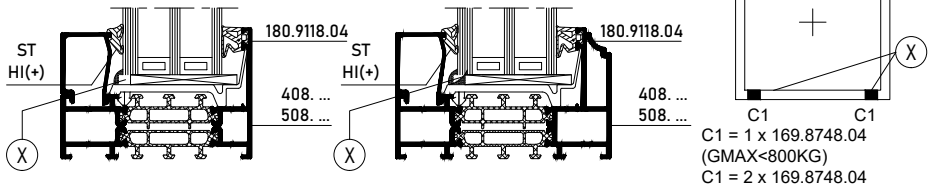

C1 = 1 x 169.8748.04 (GMAX<800KG)
C1 = 2 x 169.8748.04 (GMAX<1200KG)

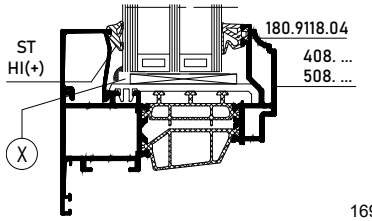

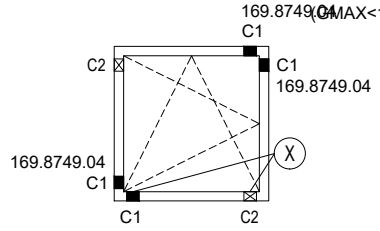

169.8749.04 (<200 kg*)

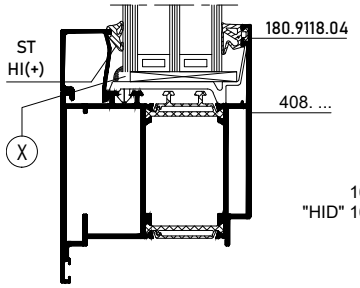

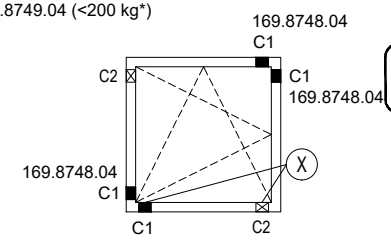

169.8748.04 (<200 kg*)
"HID" 169.8718.00 (<250 kg*)

DO
FL

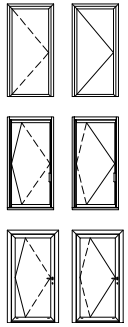

2

WI

Fu

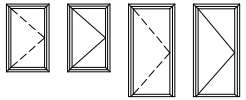

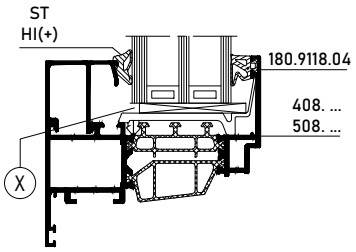

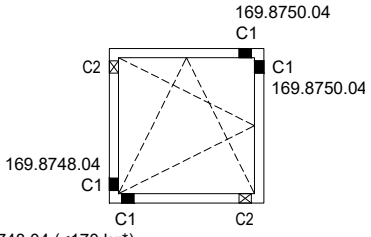

169.8748.04 (<170 kg*)
"HIW" 169.8715.00 (<300 kg*)

STANDARD GLAZING BEADS
P < 800 Pa WxH < 3200 x 3200 MM
P < 1600 Pa WxH < 1400 x 2400 MM
TUBULAR GLAZING BEADS
P < 2000 Pa WxH < 3200 x 3200 MM

BEGLAZINGSMETHODE
METHODE DE VITRAGE
GLAZING METHOD
VERGLASUNGSWEISE

GLAZING TABLE MASTERLINE 8-Fu Re De

GLAZING TABLES

MASTERLINE 8-De, MASTERLINE 8-Fu, MASTERLINE 8-Re

gasket outside	glass size ①	glass size ②	gasket inside ST	glazing bead RC	
180.9118.04		13	-	030.3620.XX	
			080.9126.SY	-	
180.9118.04	4	14	080.9125.SY	030.3620.XX	
			080.9125.SY	-	
180.9118.04	5	15	080.9127.SY	030.3623.XX	
			080.9127.SY	-	
180.9118.04	6	16	080.9126.SY	030.3623.XX	
			080.9126.SY	-	
180.9118.04	7	17	080.9125.SY	030.3623.XX	
			080.9125.SY	-	
180.9118.04	8	18	080.9127.SY	030.3622.XX	
			080.9127.SY	-	
180.9118.04	9	19	080.9126.SY	030.3622.XX	
			080.9126.SY	-	
180.9118.04	10	20	080.9125.SY	030.3622.XX	
			080.9125.SY	-	
180.9118.04	11	21	080.9127.SY	030.3619.XX	
			080.9127.SY	130.3659.XX	3
180.9118.04	12	22	080.9126.SY	030.3619.XX	
			080.9126.SY	130.3659.XX	3
180.9118.04	13	23	080.9125.SY	030.3619.XX	
			080.9125.SY	130.3659.XX	3
180.9118.04	14	24	080.9127.SY	030.3618.XX	
			080.9127.SY	130.3658.XX	3
180.9118.04	15	25	080.9126.SY	030.3618.XX	
			080.9126.SY	130.3658.XX	3
180.9118.04	16	26	080.9125.SY	030.3618.XX	
			080.9125.SY	130.3658.XX	3
180.9118.04	17	27	080.9127.SY	030.3617.XX	
			080.9127.SY	130.3657.XX	3
180.9118.04	18	28	080.9126.SY	030.3617.XX	
			080.9126.SY	130.3657.XX	3
180.9118.04	19	29	080.9125.SY	030.3617.XX	
			080.9125.SY	130.3657.XX	3
180.9118.04	20	30	080.9127.SY	030.3616.XX	
			080.9127.SY	130.3656.XX	3
180.9118.04	21	31	080.9126.SY	030.3616.XX	
			080.9126.SY	130.3656.XX	3

gasket outside	glass size ①	glass size ②	gasket inside ST	glazing bead RC	
180.9118.04	22	32	080.9125.SY	030.3616.XX	
			080.9125.SY	130.3656.XX	3
180.9118.04	23	33	080.9127.SY	030.3615.XX	
			080.9127.SY	130.3655.XX	3
180.9118.04	24	34	080.9126.SY	030.3615.XX	
			080.9126.SY	130.3655.XX	3
180.9118.04	25	35	080.9125.SY	030.3615.XX	
			080.9125.SY	130.3655.XX	3
180.9118.04	26	36	080.9127.SY	030.3614.XX	
			080.9127.SY	130.3654.XX	3
180.9118.04	27	37	080.9126.SY	030.3614.XX	
			080.9126.SY	130.3654.XX	3
180.9118.04	28	38	080.9125.SY	030.3614.XX	
			080.9125.SY	130.3654.XX	3
180.9118.04	29	39	080.9127.SY	030.3613.XX	
			080.9127.SY	130.3653.XX	3
180.9118.04	30	40	080.9126.SY	030.3613.XX	
			080.9126.SY	130.3653.XX	3
180.9118.04	31	41	080.9125.SY	030.3613.XX	
			080.9125.SY	130.3653.XX	3
180.9118.04	32	42	080.9127.SY	030.3612.XX	
			080.9127.SY	130.3652.XX	3
180.9118.04	33	43	080.9126.SY	030.3612.XX	
			080.9126.SY	130.3652.XX	3
180.9118.04	34	44	080.9125.SY	030.3612.XX	
			080.9125.SY	130.3652.XX	3
180.9118.04	35	45	080.9127.SY	030.3611.XX	
			080.9127.SY	130.3651.XX	3
180.9118.04	36	46	080.9126.SY	030.3611.XX	
			080.9126.SY	130.3651.XX	3
180.9118.04	37	47	080.9125.SY	030.3611.XX	
			080.9125.SY	130.3651.XX	3
180.9118.04	38	48	080.9127.SY	030.3610.XX	
			080.9127.SY	130.3650.XX	3
180.9118.04	39	49	080.9126.SY	030.3610.XX	
			080.9126.SY	130.3650.XX	3
180.9118.04	40	50	080.9125.SY	030.3610.XX	
			080.9125.SY	130.3650.XX	3

gasket outside	glass size ①	glass size ②	gasket inside ST	glazing bead RC	
180.9118.04	41	51	080.9127.SY	030.3609.XX	
			080.9127.SY	130.3649.XX	3
180.9118.04	42	52	080.9126.SY	030.3609.XX	
			080.9126.SY	130.3649.XX	3
180.9118.04	43	53	080.9125.SY	030.3609.XX	
			080.9125.SY	130.3649.XX	3
180.9118.04	44	54	080.9127.SY	030.3608.XX	
			080.9127.SY	130.3648.XX	3
180.9118.04	45	55	080.9126.SY	030.3608.XX	
			080.9126.SY	130.3648.XX	3
180.9118.04	46	56	080.9125.SY	030.3608.XX	
			080.9125.SY	130.3648.XX	3
180.9118.04	47	57	080.9127.SY	030.3607.XX	
			080.9127.SY	130.3647.XX	3
180.9118.04	48	58	080.9126.SY	030.3607.XX	
			080.9126.SY	130.3647.XX	3
180.9118.04	49	59	080.9125.SY	030.3607.XX	
			080.9125.SY	130.3647.XX	3
180.9118.04	50	60	080.9127.SY	030.3606.XX	
			080.9127.SY	130.3646.XX	2
180.9118.04	51	61	080.9126.SY	030.3606.XX	
			080.9126.SY	130.3646.XX	2
180.9118.04	52	62	080.9125.SY	030.3606.XX	
			080.9125.SY	130.3646.XX	2
180.9118.04	53	63	080.9127.SY	-	
			080.9127.SY	130.3645.XX	2
180.9118.04	54	64	080.9126.SY	-	
			080.9126.SY	130.3645.XX	2
180.9118.04	55	65	080.9125.SY	-	
			080.9125.SY	130.3645.XX	2
180.9118.04	56	66	080.9127.SY	-	
			080.9127.SY	130.3644.XX	2
180.9118.04	57	67	080.9126.SY	-	
			080.9126.SY	130.3644.XX	2
180.9118.04	58	68	080.9125.SY	-	
			080.9125.SY	130.3644.XX	2

FROM GLASS THICKNESS > 46MM :
PLACE ADDITIONAL GLASS SUPPORT 169.8700.04 WHEN USING STANDARD GLASS SUPPORT 169.8748.04

FROM GLASS THICKNESS > 46MM :
PLACE ADDITIONAL GLASS SUPPORT 169.8700.04 WHEN USING STANDARD GLASS SUPPORT 169.8748.04

FROM GLASS THICKNESS > 41MM :
PLACE ADDITIONAL GLASS SUPPORT 169.8700.04 WHEN USING HID GLASS SUPPORT 169.8718.00

FROM GLASS THICKNESS > 51MM :
PLACE ADDITIONAL GLASS SUPPORT 169.8700.04 WHEN USING HIW GLASS SUPPORT 169.8715.00

GLAZING METHOD

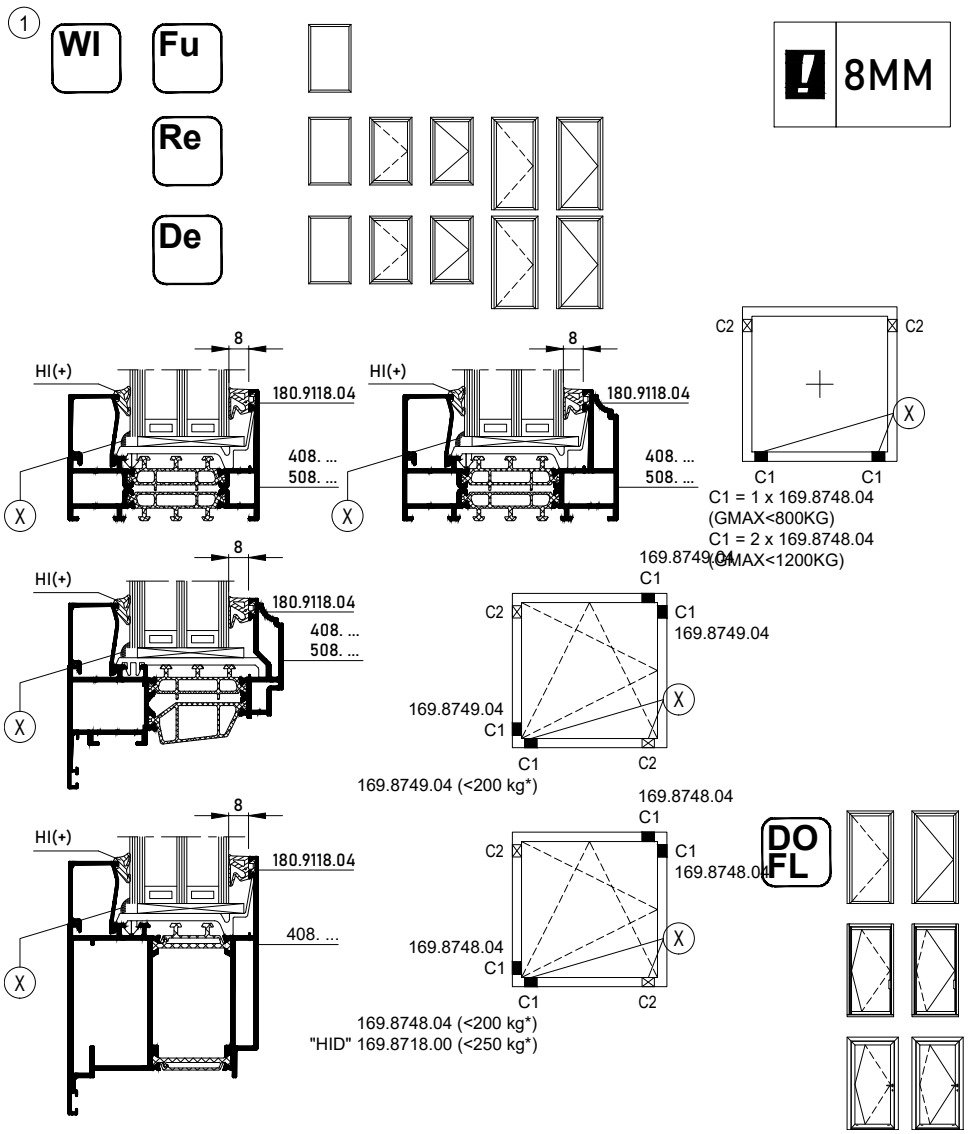

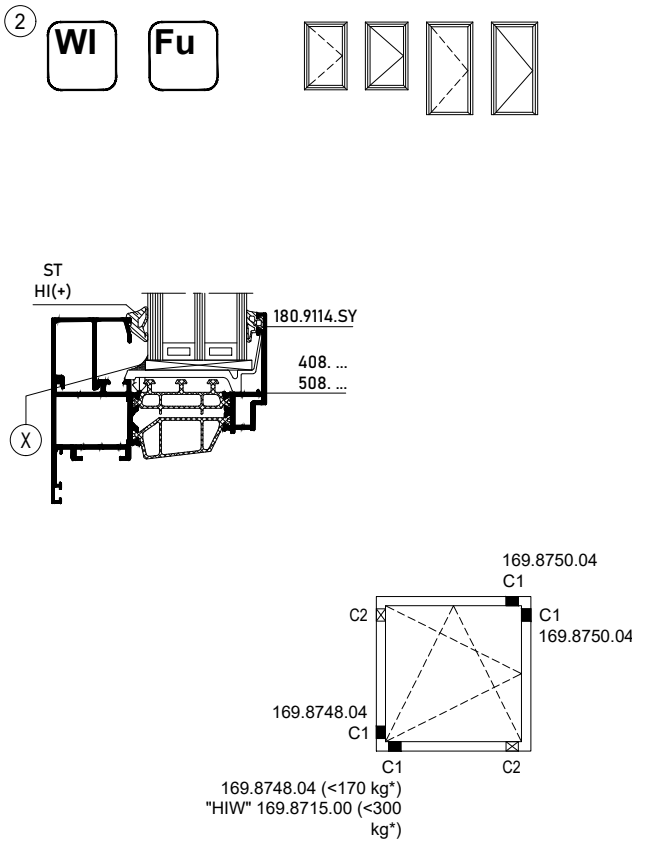

STANDARD GLAZING BEADS
P < 800 Pa WxH < 3200 x 3200 MM
P < 1600 Pa WxH < 1400 x 2400 MM
TUBULAR GLAZING BEADS
P < 2000 Pa WxH < 3200 x 3200 MM

BEGLAZINGSMETHODE
METHODE DE VITRAGE
GLAZING METHOD
VERGLASUNGSWEISE

GLAZING TABLE MASTERLINE 8-Fu Re De

FROM GLASS THICKNESS > 44MM :
PLACE ADDITIONAL GLASS SUPPORT 169.8700.04 WHEN USING STANDARD GLASS SUPPORT 169.8748.04

FROM GLASS THICKNESS > 44MM :
PLACE ADDITIONAL GLASS SUPPORT 169.8700.04 WHEN USING STANDARD GLASS SUPPORT 169.8748.04

FROM GLASS THICKNESS > 41MM :
PLACE ADDITIONAL GLASS SUPPORT 169.8700.04 WHEN USING HID GLASS SUPPORT 169.8718.00

FROM GLASS THICKNESS > 51MM :
PLACE ADDITIONAL GLASS SUPPORT 169.8700.04 WHEN USING HIW GLASS SUPPORT 169.8715.00

GLAZING METHOD

gasket outside	glass size ①	glass size ②	gasket inside	glazing bead	
180.9118.SY	6	16	080.9126.SY	030.3623.XX	
				-	2
180.9118.SY	7	17	080.9125.SY	030.3623.XX	
				-	2
180.9118.SY	8	18	080.9124.SY	030.3623.XX	
				-	2
180.9118.SY	9	19	080.9126.SY	030.3622.XX	
				-	2
180.9118.SY	10	20	080.9125.SY	030.3622.XX	
				-	2
180.9118.SY	11	21	080.9124.SY	030.3622.XX	
				-	2
180.9118.SY	12	22	080.9126.SY	030.3619.XX	
				130.3659.XX	2
180.9118.SY	13	23	080.9125.SY	030.3619.XX	
				130.3659.XX	2
180.9118.SY	14	24	080.9124.SY	030.3619.XX	
				130.3659.XX	2
180.9118.SY	15	25	080.9126.SY	030.3618.XX	
				130.3658.XX	2
180.9118.SY	16	26	080.9125.SY	030.3618.XX	
				130.3658.XX	2
180.9118.SY	17	27	080.9124.SY	030.3618.XX	
				130.3658.XX	2
180.9118.SY	18	28	080.9126.SY	030.3617.XX	
				130.3657.XX	2
180.9118.SY	19	29	080.9125.SY	030.3617.XX	
				130.3657.XX	2
180.9118.SY	20	30	080.9124.SY	030.3617.XX	
				130.3657.XX	2
180.9118.SY	21	31	080.9126.SY	030.3616.XX	
				130.3656.XX	2
180.9118.SY	22	32	080.9125.SY	030.3616.XX	
				130.3656.XX	2
180.9118.SY	23	33	080.9124.SY	030.3616.XX	
				130.3656.XX	2

gasket outside	glass size ①	glass size ②	gasket inside	glazing bead	
180.9118.SY	24	34	080.9126.SY	030.3615.XX	
				130.3655.XX	2
180.9118.SY	25	35	080.9125.SY	030.3615.XX	
				130.3655.XX	2
180.9118.SY	26	36	080.9124.SY	030.3615.XX	
				130.3655.XX	2
180.9118.SY	27	37	080.9126.SY	030.3614.XX	
				130.3654.XX	2
180.9118.SY	28	38	080.9125.SY	030.3614.XX	
				130.3654.XX	2
180.9118.SY	29	39	080.9124.SY	030.3614.XX	
				130.3654.XX	2
180.9118.SY	30	40	080.9126.SY	030.3613.XX	
				130.3653.XX	2
180.9118.SY	31	41	080.9125.SY	030.3613.XX	
				130.3653.XX	2
180.9118.SY	32	42	080.9124.SY	030.3613.XX	
				130.3653.XX	2
180.9118.SY	33	43	080.9126.SY	030.3612.XX	
				130.3652.XX	2
180.9118.SY	34	44	080.9125.SY	030.3612.XX	
				130.3652.XX	2
180.9118.SY	35	45	080.9124.SY	030.3612.XX	
				130.3652.XX	2
180.9118.SY	36	46	080.9126.SY	030.3611.XX	
				130.3651.XX	2
180.9118.SY	37	47	080.9125.SY	030.3611.XX	
				130.3651.XX	2
180.9118.SY	38	48	080.9124.SY	030.3611.XX	
				130.3651.XX	2
180.9118.SY	39	49	080.9126.SY	030.3610.XX	
				130.3650.XX	2
180.9118.SY	40	50	080.9125.SY	030.3610.XX	
				130.3650.XX	2
180.9118.SY	41	51	080.9124.SY	030.3610.XX	
				130.3650.XX	2

gasket outside	glass size ①	glass size ②	gasket inside	glazing bead	
180.9118.SY	42	52	080.9126.SY	030.3609.XX	
				130.3649.XX	2
180.9118.SY	43	53	080.9125.SY	030.3609.XX	
				130.3649.XX	2
180.9118.SY	44	54	080.9124.SY	030.3609.XX	
				130.3649.XX	2
180.9118.SY	45	55	080.9126.SY	030.3608.XX	
				130.3648.XX	2
180.9118.SY	46	56	080.9125.SY	030.3608.XX	
				130.3648.XX	2
180.9118.SY	47	57	080.9124.SY	030.3608.XX	
				130.3648.XX	2
180.9118.SY	48	58	080.9126.SY	030.3607.XX	
				130.3647.XX	2
180.9118.SY	49	59	080.9125.SY	030.3607.XX	
				130.3647.XX	2
180.9118.SY	50	60	080.9124.SY	030.3607.XX	
				130.3647.XX	2
180.9118.SY	51	61	080.9126.SY	030.3606.XX	
				130.3646.XX	2
180.9118.SY	52	62	080.9125.SY	030.3606.XX	
				130.3646.XX	2
180.9118.SY	53	63	080.9124.SY	030.3606.XX	
				130.3646.XX	2
180.9118.SY	54	64	080.9126.SY	-	
				130.3645.XX	2
180.9118.SY	55	65	080.9125.SY	-	
				130.3645.XX	2
180.9118.SY	56	66	080.9124.SY	-	
				130.3645.XX	2
180.9118.SY	57	67	080.9126.SY	-	
				130.3644.XX	2
180.9118.SY	58	68	080.9125.SY	-	
				130.3644.XX	2
180.9118.SY	59	69	080.9124.SY	-	
				130.3644.XX	2

GLAZING TABLE MASTERLINE 8-HV

GLAZING TABLE HIDDEN VENT - BALCONY DOOR

MASTERLINE 8-Fu

1

gasket outside	glass size	gasket inside	vent profile (ST/HI / HI+)
080.9125.SY	30	180.9120.04	408.0501.XX / 508.0501.XX
080.9125.SY	31	180.9120.04	408.0501.XX / 508.0501.XX
080.9125.SY	32	180.9118.04	408.0501.XX / 508.0501.XX
080.9125.SY	33	180.9118.04	408.0501.XX / 508.0501.XX
080.9125.SY	34	180.9116.04	408.0501.XX / 508.0501.XX
080.9125.SY	35	180.9116.04	408.0501.XX / 508.0501.XX
080.9125.SY	36	180.9114.SY	408.0501.XX / 508.0501.XX
080.9125.SY	37	180.9114.SY	408.0501.XX / 508.0501.XX
080.9125.SY	38	180.9120.04	408.0502.XX / 508.0502.XX
080.9125.SY	39	180.9120.04	408.0502.XX / 508.0502.XX
080.9125.SY	40	180.9118.04	408.0502.XX / 508.0502.XX
080.9125.SY	41	180.9118.04	408.0502.XX / 508.0502.XX
080.9125.SY	42	180.9116.04	408.0502.XX / 508.0502.XX
080.9125.SY	43	180.9116.04	408.0502.XX / 508.0502.XX
080.9125.SY	44	180.9114.04	408.0502.XX / 508.0502.XX
080.9125.SY	45	180.9114.04	408.0502.XX / 508.0502.XX
080.9125.SY	46	180.9118.04	408.0503.XX / 508.0503.XX
080.9125.SY	47	180.9118.04	408.0503.XX / 508.0503.XX
080.9125.SY	48	180.9116.04	408.0503.XX / 508.0503.XX
080.9125.SY	49	180.9116.04	408.0503.XX / 508.0503.XX

gasket outside	glass size	gasket inside	vent profile (ST/HI / HI+)
080.9125.SY	50	180.9114.SY	408.0503.XX / 508.0503.XX
080.9125.SY	51	180.9114.SY	408.0503.XX / 508.0503.XX
080.9125.SY	52	180.9118.04	408.0504.XX / 508.0504.XX
080.9125.SY	53	180.9118.04	408.0504.XX / 508.0504.XX
080.9125.SY	54	180.9116.04	408.0504.XX / 508.0504.XX
080.9125.SY	55	180.9116.04	408.0504.XX / 508.0504.XX
080.9125.SY	56	180.9114.SY	408.0504.XX / 508.0504.XX
080.9125.SY	57	180.9114.SY	408.0504.XX / 508.0504.XX

1

WI ST HV OG

HI HI+

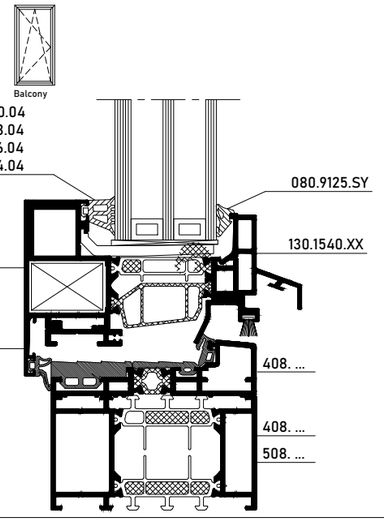

WI RC 2 HV OG

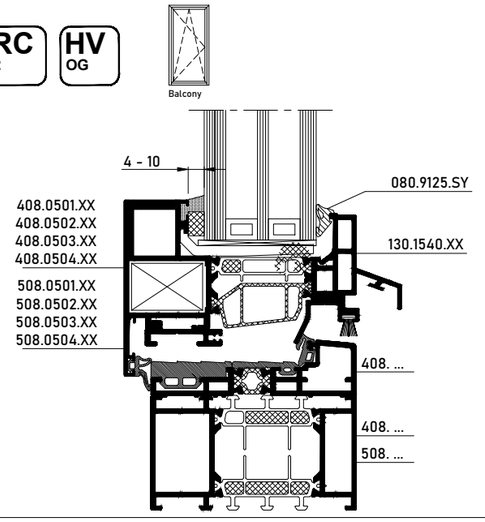

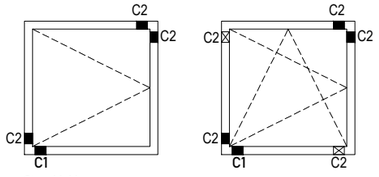

Steunblokjes
Cales de support
Support blocks ■
Tragklötze

Stelblokjes
Cales d'ajustement
Adjusting blocks ☒
Distanzklötze

VENT PROFILE	GLASS SUPPORT + SUPPORT BLOCK	SUPPORT BLOCK
408.0501.XX	169.8757.00 + max. 44 mm	max. 50 mm
408.0502.XX	169.8757.00 + max. 44 mm	max. 50 mm
408.0503.XX	169.8758.00 + max. 50mm	max. 56 mm
408.0504.XX	169.8759.00 + max. 56mm	max. 62 mm

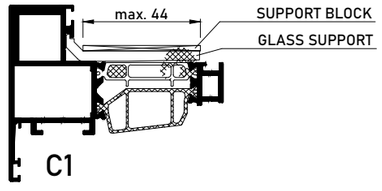

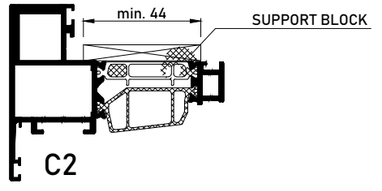

BOEKOMENDE INFO VOORBEREIDING/VERWERKING -> ZIE HOOFDSTUK F 'VERWERKINGSVOORSCHRIFTEN' !
INFO COMPLEMENTAIRE PREPARATION/USINAGE -> VOIR CHAPITRE F 'PRESCRIPTIONS DE MISE EN OEUVRE' !
ADDITIONAL INFO PREPARATION/PROCESSING -> SEE CHAPTER F 'PROCESSING DATA' !
ZUSAETZLICHE INFO VORBEREITUNG/VERARBEITUNG -> SIEHE KAPITEL F 'VERARBEITUNGSVORSCHRIFTEN' !

WI Fu

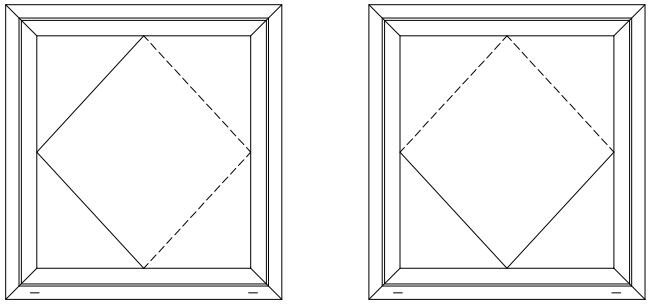

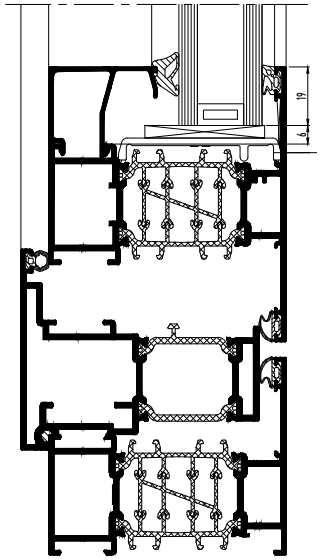

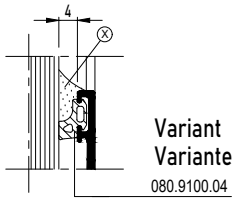

STANDARD GLAZING BEADS
P < 2000 Pa WxH < 1400 x 2400 MM
P < 1200 Pa WxH < 2500 x 2500 MM

BEGLAZINGSMETHODE
METHODE DE VITRAGE
GLAZING METHOD
VERGLASUNGSWEISE

GLAZING TABLE MASTERLINE 8-Fu Pivot Window

GLAZING TABLE

MASTERLINE 8-Fu

ST / HI/HI+		ST / HI/HI+	RC	
gasket outside	glass size	gasket inside	glazing bead	
080.9120.04	6	080.9130.04	030.3619.XX 130.3659.XX	3
080.9120.04	7	080.9128.04	030.3619.XX 130.3659.XX	3
080.9120.04	8	080.9128.04	030.3619.XX 130.3659.XX	3
080.9120.04	9	080.9126.SY	030.3619.XX 130.3659.XX	3
080.9118.04	10	080.9128.04	030.3619.XX 130.3659.XX	3
080.9118.04	11	080.9126.SY	030.3619.XX 130.3659.XX	3
080.9118.04	12	080.9126.SY	030.3619.XX 130.3659.XX	3
080.9116.04	13	080.9126.SY	030.3619.XX 130.3659.XX	3
080.9116.04	14	080.9126.SY	030.3619.XX 130.3659.XX	3
080.9116.04	15	080.9125.SY	030.3619.XX 130.3659.XX	3
080.9114.SY 080.9100.04	16	080.9126.SY	030.3619.XX 130.3659.XX	3
080.9114.SY 080.9100.04	17	080.9125.SY	030.3619.XX 130.3659.XX	3
080.9114.SY 080.9100.04	18	080.9124.SY	030.3619.XX 130.3659.XX	3
080.9114.SY 080.9100.04	19	080.9126.SY	030.3618.XX 130.3658.XX	3
080.9114.SY 080.9100.04	20	080.9125.SY	030.3618.XX 130.3658.XX	3
080.9114.SY 080.9100.04	21	080.9124.SY	030.3618.XX 130.3658.XX	3
080.9114.SY 080.9100.04	22	080.9126.SY	030.3617.XX 130.3657.XX	3
080.9114.SY 080.9100.04	23	080.9125.SY	030.3617.XX 130.3657.XX	3
080.9114.SY 080.9100.04	24	080.9124.SY	030.3617.XX 130.3657.XX	3

ST / HI/HI+		ST / HI/HI+	RC	
gasket outside	glass size	gasket inside	glazing bead	
080.9114.SY 080.9100.04	25	080.9126.SY	030.3616.XX 130.3656.XX	3
080.9114.SY 080.9100.04	26	080.9125.SY	030.3616.XX 130.3656.XX	3
080.9114.SY 080.9100.04	27	080.9124.SY	030.3616.XX 130.3656.XX	3
080.9114.SY 080.9100.04	28	080.9126.SY	030.3615.XX 130.3655.XX	3
080.9114.SY 080.9100.04	29	080.9125.SY	030.3615.XX 130.3655.XX	3
080.9114.SY 080.9100.04	30	080.9124.SY	030.3615.XX 130.3655.XX	3
080.9114.SY 080.9100.04	31	080.9126.SY	030.3614.XX 130.3654.XX	3
080.9114.SY 080.9100.04	32	080.9125.SY	030.3614.XX 130.3654.XX	3
080.9114.SY 080.9100.04	33	080.9124.SY	030.3614.XX 130.3654.XX	3
080.9114.SY 080.9100.04	34	080.9126.SY	030.3613.XX 130.3653.XX	3
080.9114.SY 080.9100.04	35	080.9125.SY	030.3613.XX 130.3653.XX	3
080.9114.SY 080.9100.04	36	080.9124.SY	030.3613.XX 130.3653.XX	3
080.9114.SY 080.9100.04	37	080.9126.SY	030.3612.XX 130.3652.XX	3
080.9114.SY 080.9100.04	38	080.9125.SY	030.3612.XX 130.3652.XX	3
080.9114.SY 080.9100.04	39	080.9124.SY	030.3612.XX 130.3652.XX	3
080.9114.SY 080.9100.04	40	080.9126.SY	030.3611.XX 130.3651.XX	3
080.9114.SY 080.9100.04	41	080.9125.SY	030.3611.XX 130.3651.XX	3
080.9114.SY 080.9100.04	42	080.9124.SY	030.3611.XX 130.3651.XX	3
080.9114.SY 080.9100.04	43	080.9126.SY	030.3610.XX 130.3650.XX	3

ST / HI/HI+		ST / HI/HI+	RC	
gasket outside	glass size	gasket inside	glazing bead	
080.9114.SY 080.9100.04	44	080.9125.SY	030.3610.XX 130.3650.XX	3
080.9114.SY 080.9100.04	45	080.9124.SY	030.3610.XX 130.3650.XX	3
080.9114.SY 080.9100.04	46	080.9126.SY	030.3609.XX 130.3649.XX	3
080.9114.SY 080.9100.04	47	080.9125.SY	030.3609.XX 130.3649.XX	3
080.9114.SY 080.9100.04	48	080.9124.SY	030.3609.XX 130.3649.XX	3
080.9114.SY 080.9100.04	49	080.9126.SY	030.3608.XX 130.3648.XX	3
080.9114.SY 080.9100.04	50	080.9125.SY	030.3608.XX 130.3648.XX	3
080.9114.SY 080.9100.04	51	080.9124.SY	030.3608.XX 130.3648.XX	3
080.9114.SY 080.9100.04	52	080.9126.SY	030.3607.XX 130.3647.XX	3
080.9114.SY 080.9100.04	53	080.9125.SY	030.3607.XX 130.3647.XX	3
080.9114.SY 080.9100.04	54	080.9124.SY	030.3607.XX 130.3647.XX	3
080.9114.SY 080.9100.04	55	080.9126.SY	030.3606.XX 130.3646.XX	2
080.9114.SY 080.9100.04	56	080.9125.SY	030.3606.XX 130.3646.XX	2
080.9114.SY 080.9100.04	57	080.9124.SY	030.3606.XX 130.3646.XX	2
080.9114.SY 080.9100.04	58	080.9126.SY	030.3200.XX -	
080.9114.SY 080.9100.04	59	080.9126.SY	030.3200.XX -	
080.9114.SY 080.9100.04	60	080.9125.SY	030.3200.XX -	
080.9114.SY 080.9100.04	61	080.9124.SY	030.3200.XX -	

GLAZING TABLE PIVOT DOOR XL

GLAZING TABLE

MASTERLINE 8-Fu

1

Aanbrengen van dichting
Mise en place joint
Insert gasket
Montage Dichtung

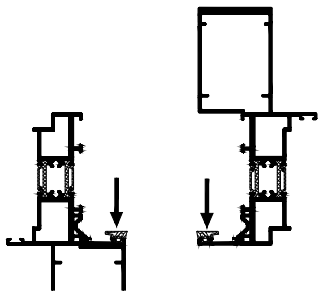

1

Aanbrengen van dichting
Mise en place joint
Insert gasket
Montage Dichtung

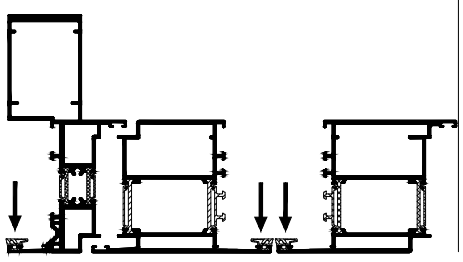

2

Aanbrengen glassteun
Mise en place support cale de vitrage
Insert glazing support
Montage Klotzbrücke

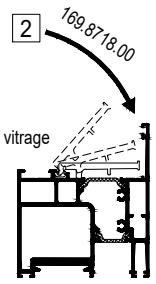

3 4

Glasplaatsing en opspieën
Pose de vitrage et des cales
Pos. of glass panels with spacers
Verklotzung der Scheibe

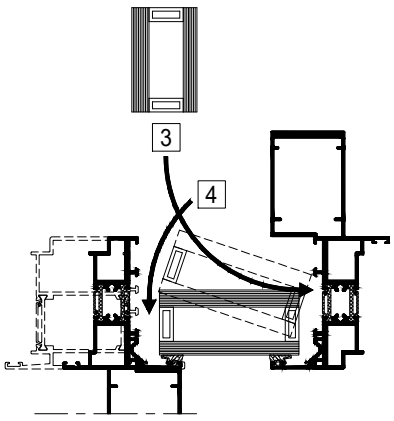

NOVATIO Seal&Bond MS 50-2K
(or KENT Rotabond 2000 (084.9055.01) or
similar (084.9056.04))

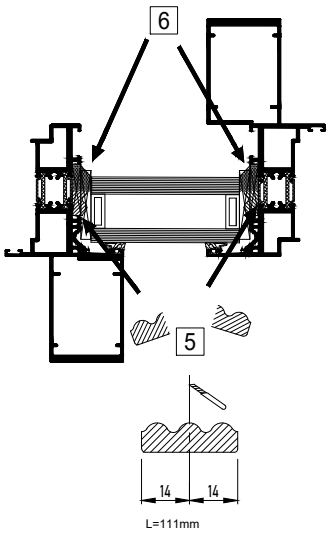

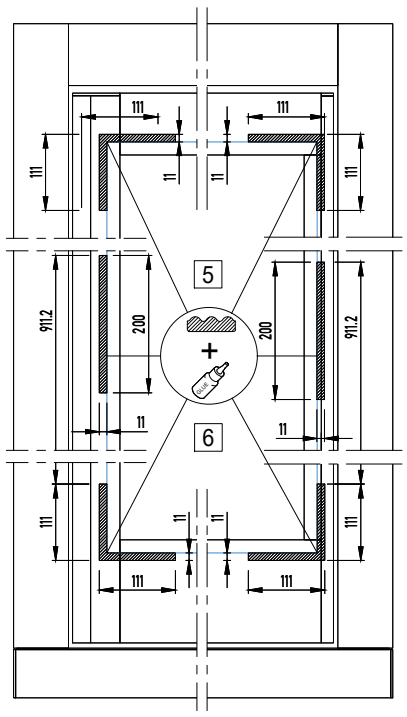

NOVATIO Seal&Bond MS 50-2K
(or KENT Rotabond 2000 (084.9055.01) or
similar (084.9056.04))

6

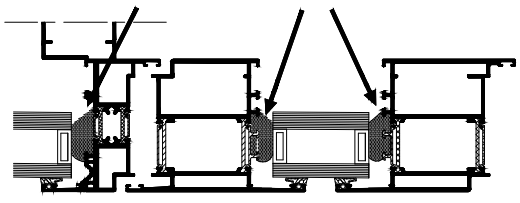

7

Aanbrengen van glaslatten
Mettre en place les parcloses
Clip in beads
Montage Glasleisten

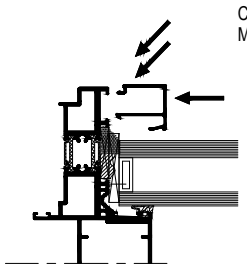

8

Aanbrengen van dichting
Mise en place joint
Insert gasket
Montage Dichtung

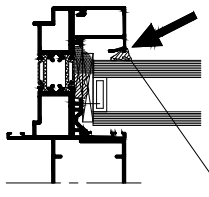

	HI / HI+
	080.9123.SY
	080.9124.SY
STANDARD	080.9125.SY
180.9372.04	080.9126.SY
180.9366.04	080.9128.SY
180.9368.04	080.9130.SY

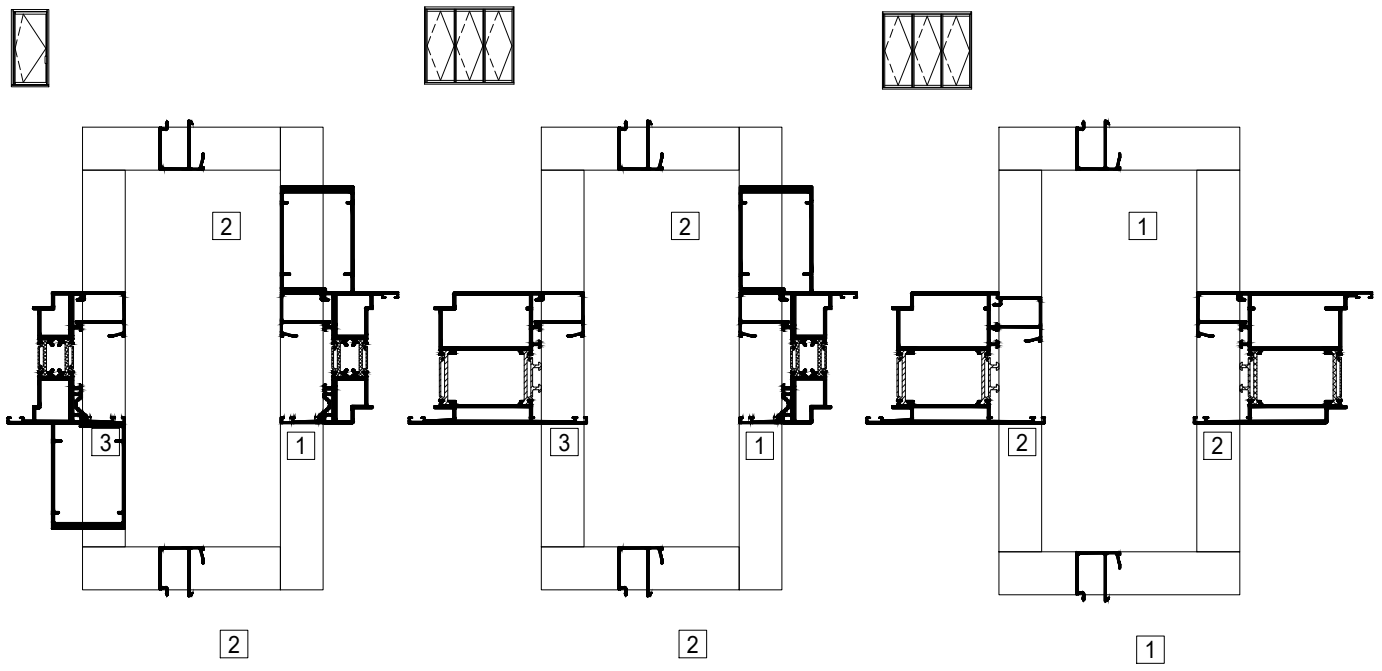

GLAZING TABLE PIVOT DOOR XL

GLAZING TABLE

MASTERLINE 8-Fu

gasket outside	glass size		gasket inside	glazing bead	
	(1)		ST HI/HI+	RC	
180.9114.SY	0		- 080.9130.SY	030.3620.XX -	0 0
180.9114.SY	4		180.9368.04 080.9128.SY	030.3620.XX -	0 0
180.9114.SY	5		180.9368.04 080.9128.SY	030.3620.XX -	0 0
180.9114.SY	6		180.9366.04 080.9127.SY	030.3620.XX -	0 0
180.9114.SY	7		180.9366.04 080.9126.SY	030.3620.XX -	0 0
180.9114.SY	8		180.9372.04 080.9125.SY	030.3620.XX -	0 0
180.9114.SY	9		180.9366.04 080.9127.SY	030.3623.XX -	0 0
180.9114.SY	10		180.9366.04 080.9126.SY	030.3623.XX -	0 0
180.9114.SY	11		180.9372.04 080.9125.SY	030.3623.XX -	0 0
180.9114.SY	12		180.9366.04 080.9127.SY	030.3622.XX -	0 0
180.9114.SY	13		180.9366.04 080.9126.SY	030.3622.XX -	0 0
180.9114.SY	14		180.9372.04 080.9125.SY	030.3622.XX -	0 0
180.9114.SY	15		180.9366.04 080.9127.SY	030.3619.XX 130.3659.XX	0 3
180.9114.SY	16		180.9366.04 080.9126.SY	030.3619.XX 130.3659.XX	0 3
180.9114.SY	17		180.9372.04 080.9125.SY	030.3619.XX 130.3659.XX	0 3
180.9114.SY	18		180.9366.04 080.9127.SY	030.3618.XX 130.3658.XX	0 3
180.9114.SY	19		180.9366.04 080.9126.SY	030.3618.XX 130.3658.XX	0 3
180.9114.SY	20		180.9372.04 080.9125.SY	030.3618.XX 130.3658.XX	0 3
180.9114.SY	21		180.9366.04 080.9127.SY	030.3617.XX 130.3657.XX	0 3
180.9114.SY	22		180.9366.04 080.9126.SY	030.3617.XX 130.3657.XX	0 3

gasket outside	glass size		gasket inside	glazing bead	
	(1)		ST HI/HI+	RC	
180.9114.SY	23		180.9372.04 080.9125.SY	030.3617.XX 130.3657.XX	0 3
180.9114.SY	24		180.9366.04 080.9127.SY	030.3616.XX 130.3656.XX	0 3
180.9114.SY	25		180.9366.04 080.9126.SY	030.3616.XX 130.3656.XX	0 3
180.9114.SY	26		180.9372.04 080.9125.SY	030.3616.XX 130.3656.XX	0 3
180.9114.SY	27		180.9366.04 080.9127.SY	030.3615.XX 130.3655.XX	0 3
180.9114.SY	28		180.9366.04 080.9126.SY	030.3615.XX 130.3655.XX	0 3
180.9114.SY	29		180.9372.04 080.9125.SY	030.3615.XX 130.3655.XX	0 3
180.9114.SY	30		180.9366.04 080.9127.SY	030.3614.XX 130.3654.XX	0 3
180.9114.SY	31		180.9366.04 080.9126.SY	030.3614.XX 130.3654.XX	0 3
180.9114.SY	32		180.9372.04 080.9125.SY	030.3614.XX 130.3654.XX	0 3
180.9114.SY	33		180.9366.04 080.9127.SY	030.3613.XX 130.3653.XX	0 3
180.9114.SY	34		180.9366.04 080.9126.SY	030.3613.XX 130.3653.XX	0 3
180.9114.SY	35		180.9372.04 080.9125.SY	030.3613.XX 130.3653.XX	0 3
180.9114.SY	36		180.9366.04 080.9127.SY	030.3612.XX 130.3652.XX	0 3
180.9114.SY	37		180.9366.04 080.9126.SY	030.3612.XX 130.3652.XX	0 3
180.9114.SY	38		180.9372.04 080.9125.SY	030.3612.XX 130.3652.XX	0 3
180.9114.SY	39		180.9366.04 080.9127.SY	030.3611.XX 130.3651.XX	0 3
180.9114.SY	40		180.9366.04 080.9126.SY	030.3611.XX 130.3651.XX	0 3
180.9114.SY	41		180.9372.04 080.9125.SY	030.3611.XX 130.3651.XX	0 3
180.9114.SY	42		180.9366.04 080.9127.SY	030.3610.XX 130.3650.XX	0 3

gasket outside	glass size		gasket inside	glazing bead	
	(1)		ST HI/HI+	RC	
180.9114.SY	43		180.9366.04 080.9126.SY	030.3610.XX 130.3650.XX	0 3
180.9114.SY	44		180.9372.04 080.9125.SY	030.3610.XX 130.3650.XX	0 3
180.9114.SY	45		180.9366.04 080.9127.SY	030.3609.XX 130.3649.XX	0 3
180.9114.SY	46		180.9366.04 080.9126.SY	030.3609.XX 130.3649.XX	0 3
180.9114.SY	47		180.9372.04 080.9125.SY	030.3609.XX 130.3649.XX	0 3
180.9114.SY	48		180.9366.04 080.9127.SY	030.3608.XX 130.3648.XX	0 3
180.9114.SY	49		180.9366.04 080.9126.SY	030.3608.XX 130.3648.XX	0 3
180.9114.SY	50		180.9372.04 080.9125.SY	030.3608.XX 130.3648.XX	0 3
180.9114.SY	51		180.9366.04 080.9127.SY	030.3607.XX 130.3647.XX	0 3
180.9114.SY	52		180.9366.04 080.9126.SY	030.3607.XX 130.3647.XX	0 3
180.9114.SY	53		180.9372.04 080.9125.SY	030.3607.XX 130.3647.XX	0 3
180.9114.SY	54		180.9366.04 080.9127.SY	030.3606.XX 130.3646.XX	0 2
180.9114.SY	55		180.9366.04 080.9126.SY	030.3606.XX 130.3646.XX	0 2
180.9114.SY	56		180.9372.04 080.9125.SY	030.3606.XX 130.3646.XX	0 2
180.9114.SY	57		180.9366.04 080.9127.SY	- 130.3645.XX	0 2
180.9114.SY	58		180.9366.04 080.9126.SY	- 130.3645.XX	0 2
180.9114.SY	59		180.9372.04 080.9125.SY	- 130.3645.XX	0 2
180.9114.SY	60		180.9366.04 080.9127.SY	- 130.3644.XX	0 2
180.9114.SY	61		180.9366.04 080.9126.SY	- 130.3644.XX	0 2
180.9114.SY	62		180.9372.04 080.9125.SY	- 130.3644.XX	0 2

(1) **FROM GLASS THICKNESS > 50MM : PLACE ADDITIONAL GLASS SUPPORT 169.8700.04 WHEN USING STANDARD GLASS SUPPORT 169.8748.04**

FROM GLASS THICKNESS > 45MM : PLACE ADDITIONAL GLASS SUPPORT 169.8700.04 WHEN USING HID GLASS SUPPORT 169.8718.00

GLAZING METHOD

GLAZING TABLE PIVOT DOOR XL

GLAZING TABLE

MASTERLINE 8-Fu

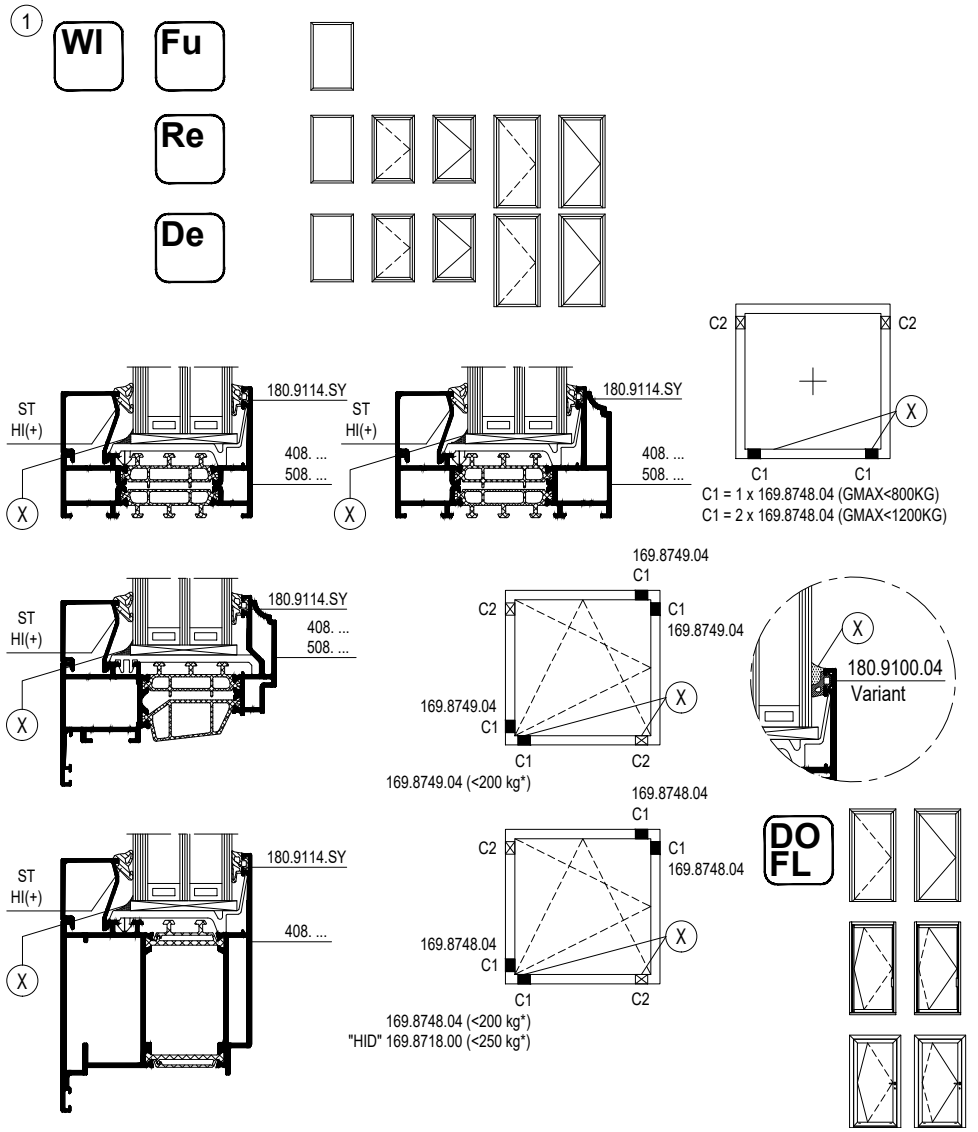

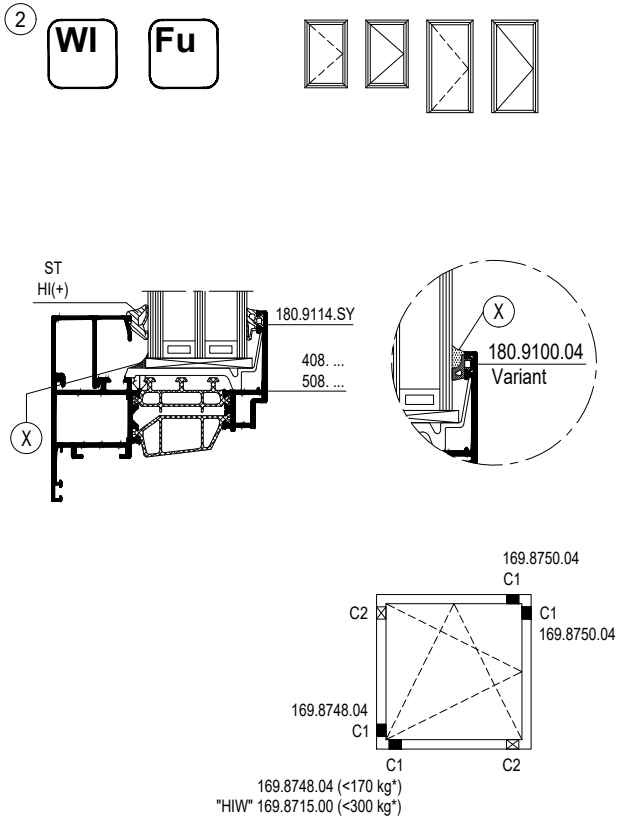

STANDARD GLAZING BEADS
P < 800 Pa WxH < 3200 x 3200 MM
P < 1600 Pa WxH < 1400 x 2400 MM
TUBULAR GLAZING BEADS
P < 2000 Pa WxH < 3200 x 3200 MM

BEGLAZINGSMETHODE
METHODE DE VITRAGE
GLAZING METHOD
VERGLASUNGSWEISE

GLAZING TABLE PANEL DOOR

GLAZING TABLE SPY WINDOW

MASTERLINE 8-Fu

glass strip	glass size	gasket inside	glazing bead
0	4	080.9130.SY	030.3639.XX
4	5	080.9128.SY	030.3639.XX
4	6	080.9128.SY	030.3639.XX
4	7	080.9127.SY	030.3639.XX
4	8	080.9126.SY	030.3639.XX
4	9	080.9125.SY	030.3639.XX
4	10	080.9124.SY	030.3639.XX
4	11	080.9126.SY	030.3638.XX
4	12	080.9125.SY	030.3638.XX
4	13	080.9124.SY	030.3638.XX
4	14	080.9126.SY	030.3637.XX
4	15	080.9125.SY	030.3637.XX
4	16	080.9124.SY	030.3637.XX
4	17	080.9126.SY	030.3636.XX
4	18	080.9125.SY	030.3636.XX
4	19	080.9124.SY	030.3636.XX
4	20	080.9126.SY	030.3635.XX
4	21	080.9125.SY	030.3635.XX
4	22	080.9124.SY	030.3635.XX
4	23	080.9126.SY	030.3634.XX
4	24	080.9125.SY	030.3634.XX
4	25	080.9124.SY	030.3634.XX
4	26	080.9126.SY	030.3633.XX
4	27	080.9125.SY	030.3633.XX
4	28	080.9127.SY	030.3632.XX
4	29	080.9126.SY	030.3632.XX
4	30	080.9125.SY	030.3632.XX
4	31	080.9127.SY	030.3631.XX
4	32	080.9126.SY	030.3631.XX
4	33	080.9125.SY	030.3631.XX
4	34	080.9127.SY	030.3630.XX
4	35	080.9126.SY	030.3630.XX
4	36	080.9128.SY	030.3629.XX
4	37	080.9127.SY	030.3629.XX
4	38	080.9126.SY	030.3629.XX
4	39	080.9128.SY	030.3628.XX
4	40	080.9127.SY	030.3628.XX
4	41	080.9126.SY	030.3628.XX
4	42!	080.9128.SY	030.3627.XX
4	43!	080.9127.SY	030.3627.XX
4	44!	080.9126.SY	030.3627.XX
4	45!	080.9128.SY	030.3626.XX
4	46!	080.9127.SY	030.3626.XX
4	47!	080.9126.SY	030.3626.XX
4	48!	080.9125.SY	030.3626.XX
4	49!	080.9124.SY	030.3626.XX
4	50!	080.9126.SY	030.3665.XX
4	51!	080.9128.SY	030.3664.XX
4	52!	080.9127.SY	030.3664.XX
4	53!	080.9126.SY	030.3664.XX
4	54!	080.9125.SY	030.3664.XX
4	55!	080.9130.SY	030.3196.XX
4	56!	080.9128.SY	030.3196.XX
4	57!	080.9128.SY	030.3196.XX
4	58!	080.9127.SY	030.3196.XX
4	59!	080.9128.SY	030.3621.XX
4	60!	080.9128.SY	030.3621.XX
4	61!	080.9127.SY	030.3621.XX
4	62!	080.9126.SY	030.3621.XX
4	63!	080.9125.SY	030.3621.XX

GLAZING TABLE PANEL DOOR

GLAZING TABLE SPY WINDOW

MASTERLINE 8-Fu

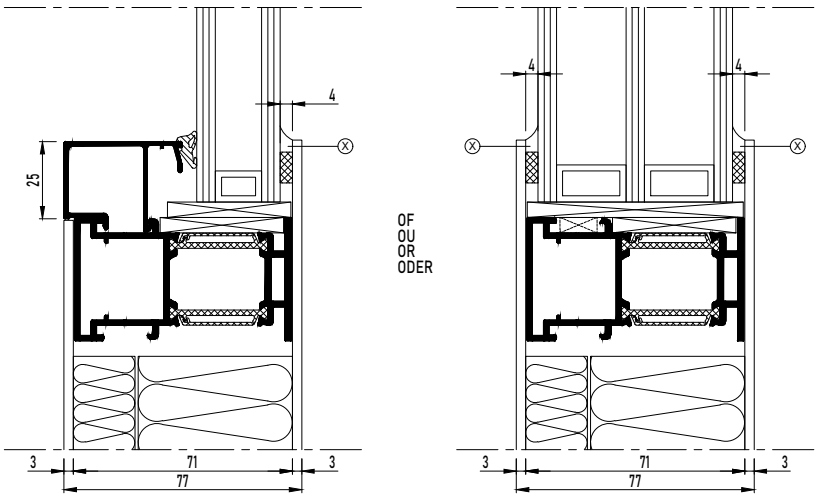

(!)

GLASLAT UITSPAREN -> RAADPLEEG HOOFDSTUK F
DECOUPER PARCLOSE -> CONSULTEZ CHAPITRE F
RECESS GLAZING BEAD -> CONSULT CHAPTER F
GLASLEIST BEARBEITEN -> SIEHE KAPITEL F

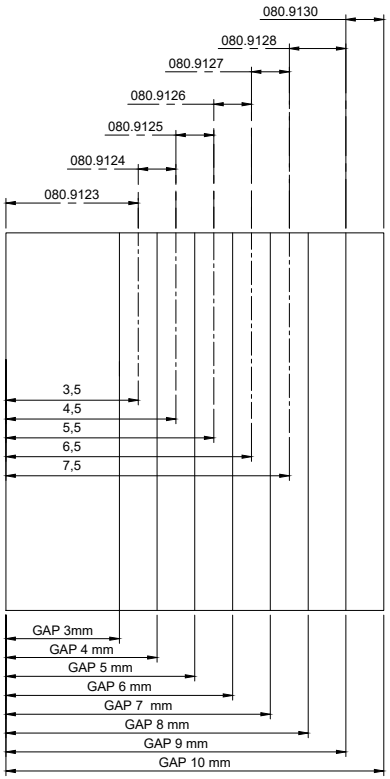

Gebruiksgebied binnenbeglazingsdichtingen
Champ d'application des joints de vitrage intérieur
Field of application of inner glazing gaskets
Anwendungsbereich der inneren Verglasungsdichtungen

De beglazingstabellen zijn op basis van theoretische glasmaten
LET OP: Hou steeds rekening met de finale glassamenstelling om de juiste dichting te bepalen.
Diktetolerantie volgens DIN EN 1279-1:2018-10

Les tableaux de vitrage sont basés sur des tailles de verre théoriques.
ATTENTION : Toujours tenir compte de la composition finale du verre pour déterminer le joint correct.
Tolérance d'épaisseur selon la norme DIN EN 1279-1:2018-10

The glazing tables are based on theoretical glass sizes
ATTENTION: Always take into account the final glass composition to determine the correct gasket.
Thickness tolerance according to DIN EN 1279-1:2018-10

Die Verglasungstabellen beruhen auf theoretischen Glasgrößen
ACHTUNG: Berücksichtigen Sie immer die endgültige Glaszusammensetzung, um die richtige Verglasungsdichtung zu bestimmen.
Dickentoleranz nach DIN EN 1279-1:2018-10

GLAZING METHOD PANIC DOOR

GLAZING METHOD RC3 - PANIC

MASTERLINE 8-Fu, OPENING DOORS

SCHEMATIC POSITION OF GLUING METHOD 5A

General rules

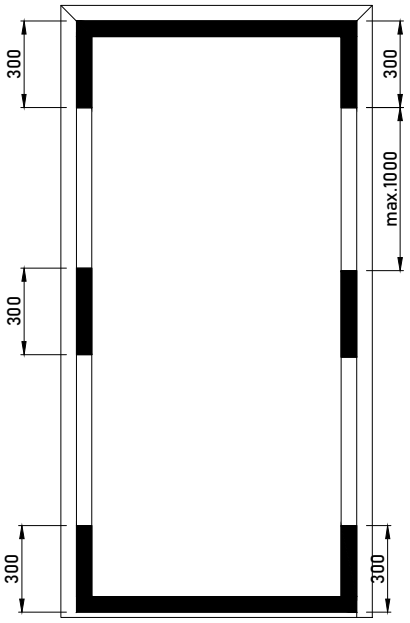

Cover hardware area.

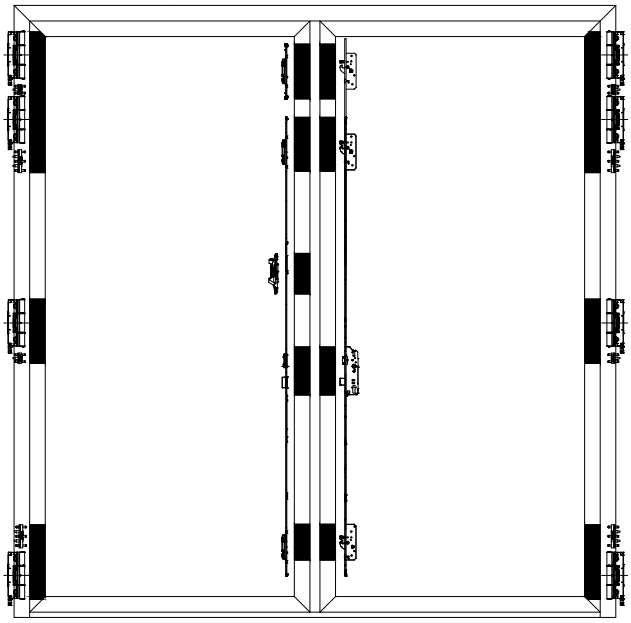

SCHEMATIC POSITION OF GLUING METHOD 5B

Full panic configuration

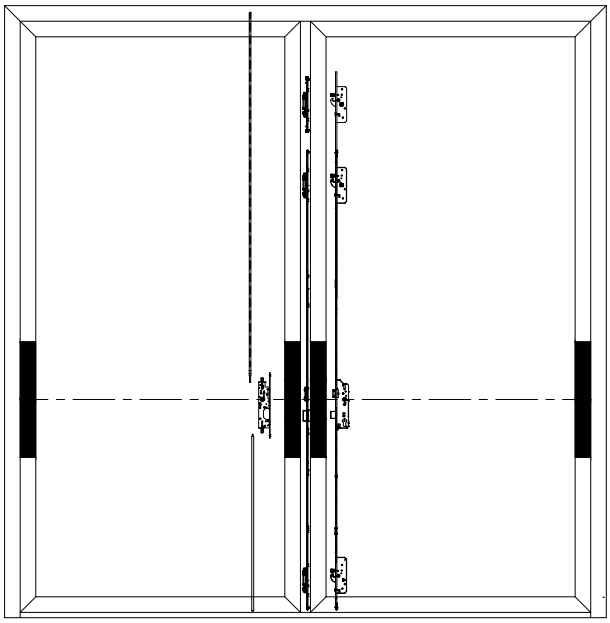

Partly panic configuration

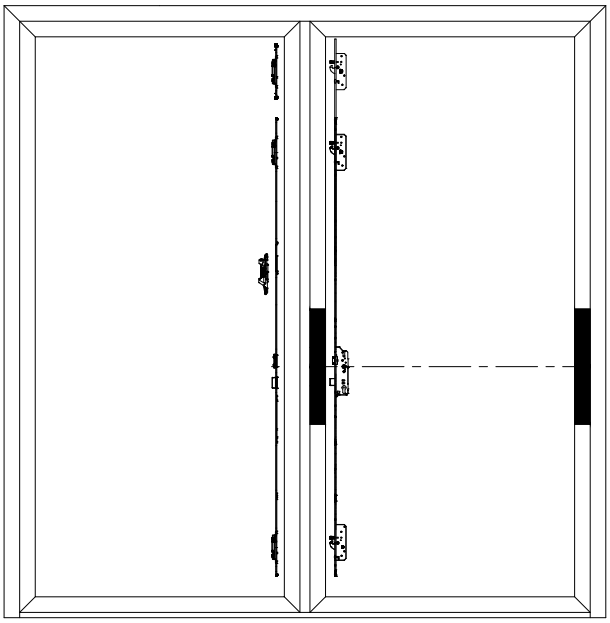

C1 - 169.8718.00

GLAZING METHOD PANIC DOOR

GLAZING METHOD RC3 - PANIC

MASTERLINE 8-Fu, OPENING DOORS

1

Aanbrengen van dichting
Mise en place joint
Insert gasket
Montage Dichtung

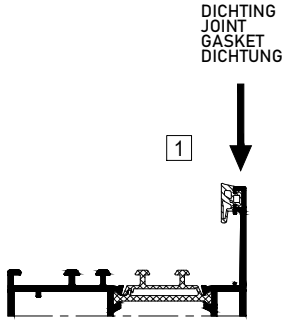

2

Aanbrengen glassteun
Mise en place support cale de vitrage
Insert glazing support
Montage Klotzbrücke

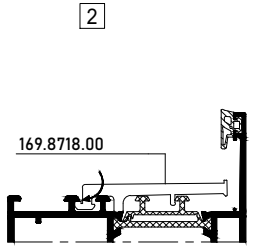

3

Glasplaatsing en opspieën
Pose de vitrage et des cales
Pos. of glass panels with spacers
Verklotzung der Scheibe

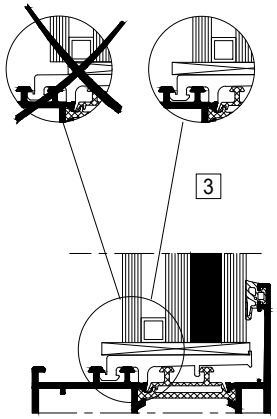

4

Afdichten van glassteunen en aanbrengen van glaslatten

Etancher les supports cale de vitrage et mettre en place les parcloses

Seal off glass supports and clip in beads

Verglasungsklötze sichern und Montage Glasleisten

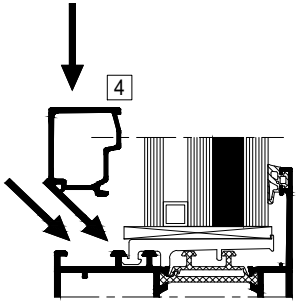

MONTAGEVOLGORDE
L'ORDRE DE MONTAGE
THE ORDER OF ASSEMBLY
MONTAGEREIHENFOLGE
1 2 3 .

5

Aanbrengen van lijm
Application de colle
Application glue
Anbringen verkleben

NOVATIO Seal&Bond MS 50-2K
(or KENT Rotabond 2000 (084.9055.01) or similar (084.9056.04))

5A

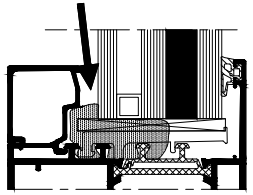

NOVATIO Seal&Bond MS 50-2K
(or KENT Rotabond 2000 (084.9055.01) or similar (084.9056.04))

5B

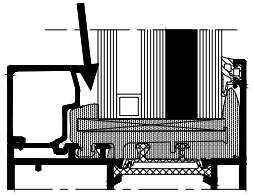

2-COMPONENTENLIJM OVEREENSTEMMEND MET DE VOORSCHRIFTEN VAN DE GLASLEVERANCIER
APPLICATION OF TWO COMPONENT GLUE CORRESPONDING TO THE REQUIREMENTS OF THE GLASS SUPPLIER
APPLICATION DE COLLE A DEUX COMPOSANTS CONFORMEMENT AUX PRESCRIPTIONS DU FOURNISSEUR DE VERRE
ANBRINGEN ZWEIKOMPONENTENKLEBER GEMASS DEN ANFORDERUNGEN DES GLAS LIEFERANTEN

6

Aanbrengen van dichting
Mise en place joint
Insert gasket
Montage Dichtung

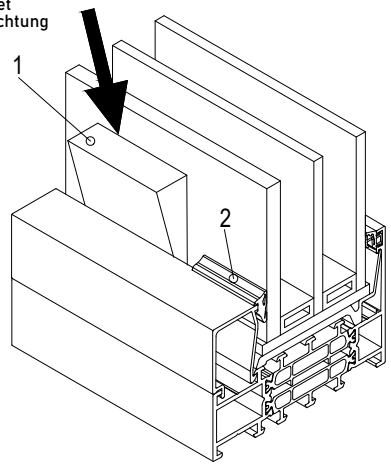

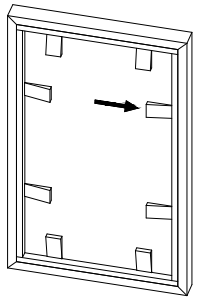

Gereedschap in hout of PVC vergemakkelijkt het plaatsen

Outillage en bois ou PVC facilite le montage

A wooden or PVC spacer can be used to insert glazing gasket

Hilfskeile aus Holz oder Kunststoff verringern die Montagezeiten

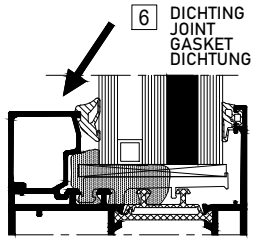



Together
for better